AROCLOR: Process Desc.
for the Mfg. of Aroclor
in Dept. 246
10/66 D. F. Harris

COMPANY
CONFIDENTIAL

TRAN 006979

PROCESS DESCRIPTION FOR THE MANUFACTURE OF AROCLORS

In Dept. 246

COMPANY CONFIDENTIAL

TRAN 006980

HARTOLDMON0043002

MONSANTO COMPANY
Monsanto, Illinois

Messrs:
P. E. Heisler
H. C. Carder
M. E. Gibbs - Org. Res.
H. L. Hubbard - Org. Res.
Process Holders

September 20, 1966

Tentative Amendment No. "F"

TITLE

Tentative Amendment No. "F" to the Standard Manufacturing Process for Aroclor (Dept. 246 - WGK) dated 7/20/64.

OBJECTIVE

Produce improved quality Aroclor with activated bauxite (Al_2O_3) treatment.

PRESENT PRACTICE

Distilled Aroclor is treated with activated attapulgus clay for quality up-grading in one of two earth treating tanks followed by filtration to remove suspended solids before storage.

PROPOSED PROCEDURE

Substitute clay with "porocel", activated bauxite supplied by Minerals and Chemical Corp., at levels sufficient to evaluate up-grading performance. Porocel (20/60 and + 60 mesh) suspended with agitation and recirculation in the existing earth treating system. Treated Aroclor will be filtered to remove suspended solids before storage.

JUSTIFICATION

Anniston personnel have demonstrated (see Report 370-322-9 by J. G. Bryant) exceptional up-grading performance in the laboratory by circulating Aroclor 1242 through a packed bauxite bed. Reported performance is summarized below:

Specification	Present Up-grading Performance @ Anniston	Bauxite Lab. Treating Performance
Resistivity (x 10⁶ mm-cm)	900	44,000
Power Factor @ 100°C & 1 KC	0.2	0.02 *
@ 100°C & 60 cps	2.0	0.03 *
Thermal Chemical Chlorides, ppm	0.3	0.07
Westinghouse Stability, ppm	0.7	0.18
Hydrolysis Stability, ppm	0.2	0.04

* Exceeding Sensitivity of Measuring Instrument.

COMPANY CONFIDENTIAL

TRAN 006981

HARTOLDMON0043003

JUSTIFICATION (Cont'd.)

Monsanto can very economically defend its unique marketing position if such performance can be demonstrated on a plant scale.

TIMING

This amendment will be initiated after Anniston has successfully demonstrated a similar amendment and at time consistent with normal production schedules.

SAFETY

Aluminum oxides have been in contact with Aroclors for more than two years in storage units with no difficulties. Because of this, and laboratory work with bauxite treatment, present safety considerations are believed to be adequate.

EXTENT OF DEMONSTRATION

Up to 40 batches of Aroclor 1242 (2,000 gal./batch) will be processed resulting in a maximum of 800,000 lbs. of product which will be used in non-electrical applications.

Prepared by: C. E. Woodward
Cliff Woodward

Reviewed By:

Norman F. Mueller 10/26/66
Div. Research Group Leader Date

[illegible] 10/28/66
Mgr. of Research

Research Safety Review Committee

J. P. Guinn 10/28/66

[illegible] 10/28/66

[illegible] 10/28/66

Approved By:

D. E. Harris 10-12-66
Production Supervisor Date

[illegible] 10/10/66
Prod. Gen. Superintendent Date

D. C. Armstrong 10/18/66
Pl. Process Res. Group Leader Date

JRS [illegible] 10/20/66
Gen. Supt. Tech. Services Date

H. C. Carder 10/26/66
Technical Production Manager Date

COMPANY CONFIDENTIAL

TRAN 006982

HARTOLDMON0043004

MONSANTO COMPANY

ORGANIC CHEMICALS DIVISION

STANDARD MANUFACTURING PROCESS FOR

AROCLORS - DEPARTMENT 246

****

Supersedes: Standard Manufacturing Process for the Manufacture of Aroclors, Department 246 Dated July 20, 1964 and all amendments.

Prepared by: D. E. Harris

Approved by:

C Eldredge
General Superintendent

M. E. Gibbs
Research

W. C. Cordle
Technical Production Mgr.

Date: 10/4

af

COPY 11 of 15

This process is the property of Monsanto Company and the recipient is responsible for its safekeeping. It contains confidential information of Monsanto Company which must not be reproduced, revealed to unauthorized persons or sent outside the company without proper authorization. Either retain in a secure file or return to the Standard Documents Dept.

COMPANY CONFIDENTIAL

TRAN 006983

HARTOLDMON0043005

DISTRIBUTION SHEET

1. Technical Information Center
2. Technical Information Center
3. Central Reports
4. Technical Production Manager
5. Production General Superintendent
6. Production Supervisor
7. TSD Group Leader
8. Plant Research
9. Library
10. Extra
11. Extra
12. Extra
13. Extra
14. Danna
15. Danna

COMPANY CONFIDENTIAL

TRAN 006984

HARTOLDMON0043006

AMENDING RECORD SHEET

COMPANY
CONFIDENTIAL

TRAN 006985

TABLE OF CONTENTS

	INDEX	PAGE
SECTION I	SYNOPSIS OF PROCESS	1 - 2
SECTION II	FLOW SHEETS	3
	A. CHLORINATION REACTION STEP	3 A
	B. AERATION AND DISTILLATION	3 B
	C. BLENDING, FILTRATION AND STORAGE	3 C
SECTION III	PROCESS IN DETAIL	
	A. NOMENCLATURE AND BATCH DATA	4
	B. CHLORINATION REACTION STEP	5 - 6
	C. AERATION AND DISTILLATION	7
	D. BLENDING, FILTRATION AND STORAGE	7 - 8
	E. BY-PRODUCT HYDROGEN CHLORIDE	8
SECTION IV	COMMENTS ON PROCESS	
	A. CHLORINATION STEP	9 - 11
	B. AERATION & DISTILLATION	11
	C. BLENDING & FILTRATION	12
	D. GENERAL	
APPENDIX A	EQUIPMENT LIST	13-21
APPENDIX B	FINISHED GOODS AND RAW MATERIAL SPECIFICATIONS	22
APPENDIX C	PHYSICAL AND CHEMICAL DATA	23
APPENDIX D	UTILITIES	24-28
APPENDIX E	PERSONNEL	29-30
APPENDIX F	PACKAGING AND SHIPPING	31-32
APPENDIX G	MATERIAL BALANCE	33-35
APPENDIX H	ATMOSPHERIC DISCHARGE AND WASTE DISPOSAL	36
APPENDIX I	PROCESS CONTROL PROCEDURES	37
APPENDIX J	SAFETY AND TOXICITY DATA	38-44
APPENDIX K	BACKGROUND INFORMATION	45
APPENDIX L	TIME CYCLES	46
APPENDIX M	QUALITY CONSIDERATIONS	47-53
APPENDIX N	MISCELLANEOUS	54-57

COMPANY CONFIDENTIAL

TRAN 006986

HARTOLDMON0043008

Dept. 246 - Process Description

AROCLOR

SECTION 1

SYNOPSIS OF PROCESS

Aroclor is a trade name used to designate chlorination products of biphenyl, biphenyl high boilers, or mixtures of the two. Liquid Aroclors are produced by chlorinating biphenyl to 21, 32, 42, 48, 54, 60, and 62% chlorine content. Chlorination above 63% yields a solid product at normal temperatures. Liquid Aroclors are identified by four digit numbers. The last two digit numbers represent the chlorine content (percentage by weight), and the first two numbers represent the Aroclor condition (crude or distilled). Crude Aroclors start with the prefix 11 whereas distilled Aroclors start with the prefix 12. For example, Aroclor 1242 is a distilled chlorinated biphenyl containing 42% chlorine.

The first process step in the manufacture of Aroclors is a chlorination reaction. Biphenyl (ø-ø) and chlorine (Cl_2) gas in the presence of a Ferric Chloride ($FeCl_3$) catalyst are reacted to form a chlorinated aromatic compound. Hydrogen chloride (HCl) gas is liberated during this reaction and piped to the muriatic acid department. The exact chemistry of biphenyl chlorination is unknown. Many isomers are formed. A schematic representation of biphenyl chlorination is as follows:

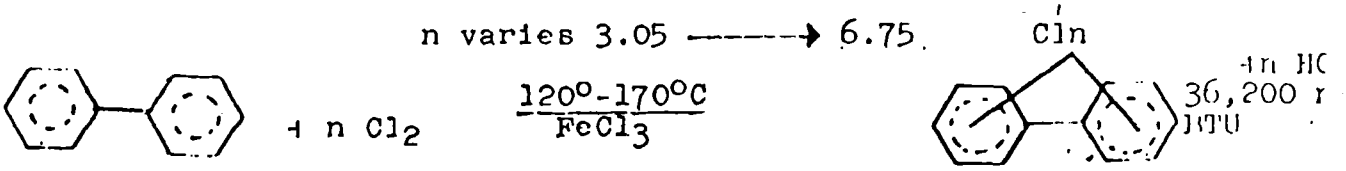

BIPHENYL M.W. = 154	CHLORINE M.W. = 71	AROCLOR M.W.= (254.1- 395.6)	HYDROGEN CHLORIDE M.W.=36.

COMPANY CONFIDENTIAL

TRAN 006987

HARTOLDMON0043009

Dept. 246 - Process Description

AROCLOR

SECTION 1

SYNOPSIS OF PROCESS (Cont'd.)

The second process step is the aeration and distillation of the crude Aroclor. Dry air is blown through the crude Aroclor for a period of two hours or more. Aeration removes most of the free hydrogen chloride. Distillation of crude Aroclors is done under vacuum automatically controlled with the controller pre-set between 30-50 mm Hg. ags. to obtain the best performance. Distillation of crude Aroclor separates residue, lime, ferric chloride, and tars from the finished product.

The third process step includes blending, filtration, and storage of Aroclors. Approximately 0.1 - 0.2% by weight of Attapulgus earth is added to the distilled Aroclor. The mixture is agitated and filtered to the finished product tank. The purpose of the Attapulgus earth is to absorb moisture and chloride ion to improve the electrical properties of the Aroclor. During the filtration of distilled Aroclor, 2 - 16 oz. samples of the finished product are taken to the laboratory for control analyses. If the control analyses pass specifications, the batch is transferred to a storage tank.

This process description will describe the production of Aroclors 1242, 1248, 1254, 1260, 1254 xylene mix, and 1262.

COMPANY
CONFIDENTIAL

HARTOLDMON0043010

Dept. 246 - Process Description

AROCLOR

SECTION II

FLOW SHEETS

This section contains the following flow sheets.

1. Complete process flow sheet.
2. Chlorination Reaction Step
3. Aeration and Distillation
4. Blending, Filtration and Storage.

COMPANY CONFIDENTIAL

TRAN 006989

HARTOLDMON0043011

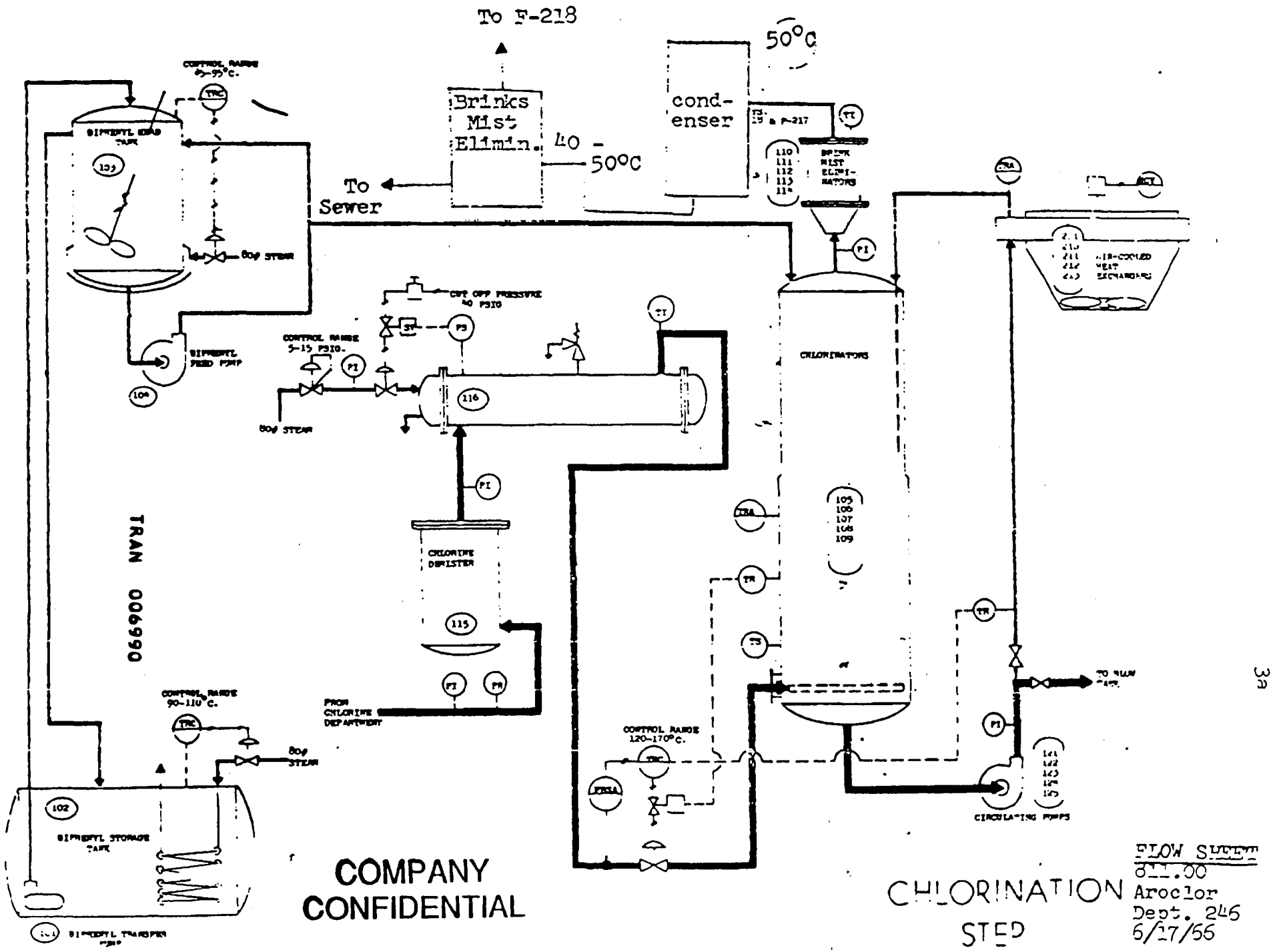

HARTOLDMON0043012

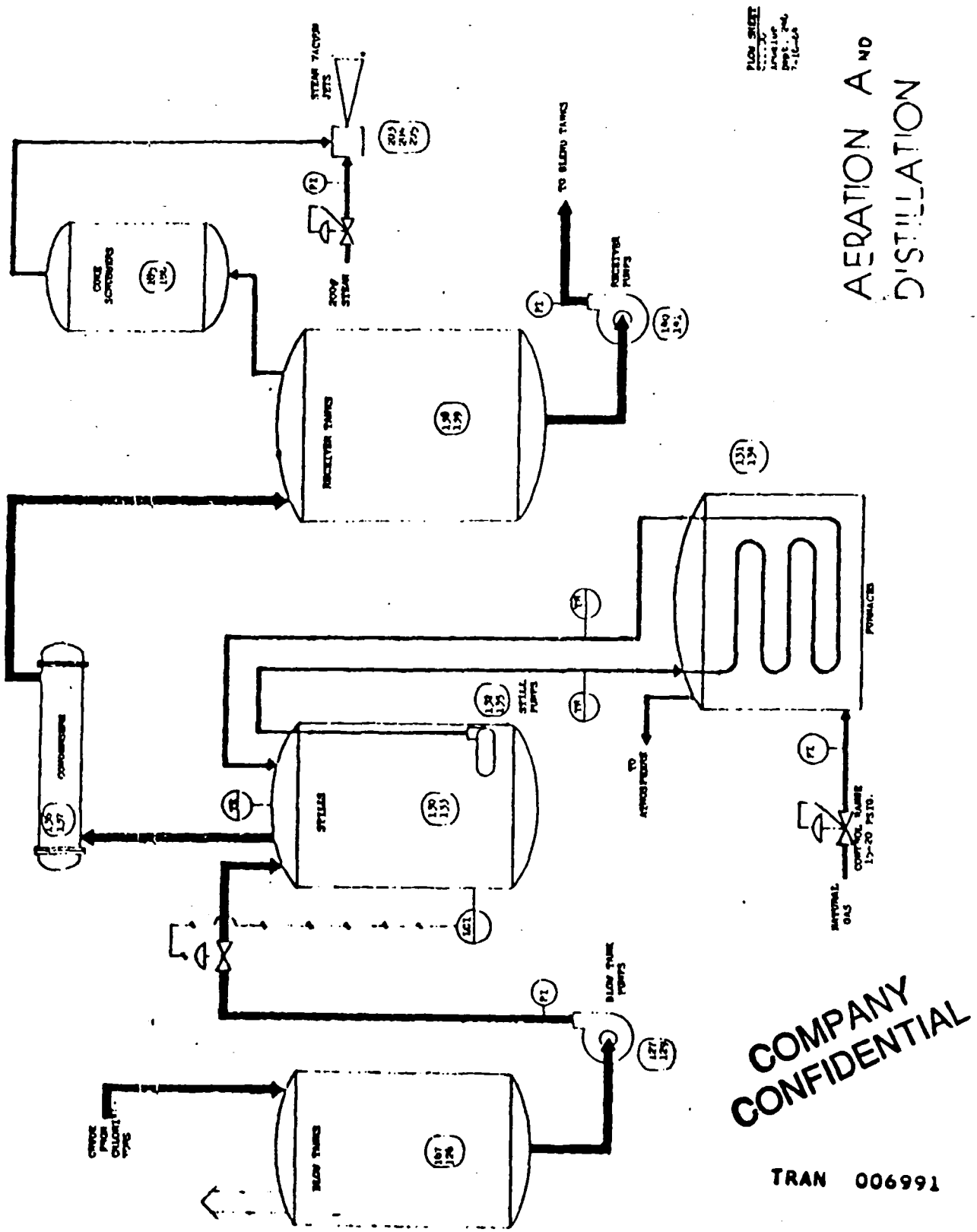

HARTOLDMON0043013

COMPANY
CONFIDENTIAL

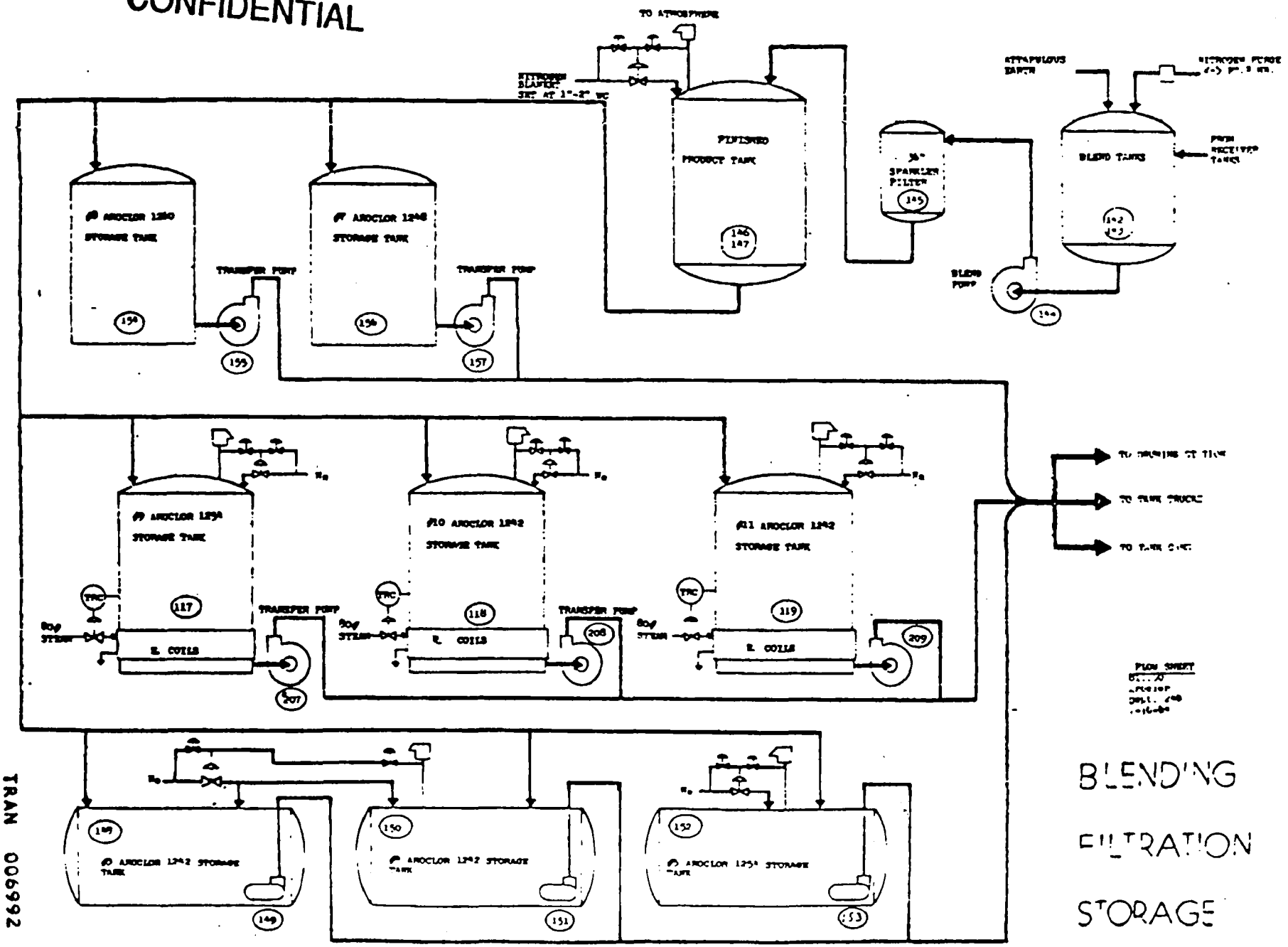

TRAN 006992

3c

BLENDING

FILTRATION

STORAGE

HARTOLDMON0043014

Dept. 246 - Process Description

AROCLOR

SECTION III

COMPANY CONFIDENTIAL

PROCESS IN DETAIL

A. NOMENCLATURE AND BATCH DATA

Aroclor is a trade name used to designate chlorination products of biphenyl, biphenyl high boilers, or a mixture of the two. The physical properties vary from light free flowing liquids to crystalline and non-crystalline solids, depending upon the degree of chlorination and the composition of the raw materials. Chlorinated biphenyl yields a liquid product of increasing viscosity up to and including 63% chlorine. Chlorination above 63% yields a solid product at normal temperatures.

A numerical system of nomenclature, consisting of four digits, has been developed for identifying the various Aroclors. The first digit denotes the aromatic raw material used in the chlorination step. The figure 1 -- indicates 100% technical grade biphenyl. The second digit denotes whether or not the product is distilled. The figure -1 -- indicates undistilled product, and the figure -2 -- indicates a distilled product. The last two digits of the nomenclature system denote the approximate percentage by weight of chlorine contained in the finished product. For example, Aroclor 1242 is a distilled chlorinated biphenyl containing 42% chlorine.

Manufacture of all liquid Aroclors is essentially the same. Batch data are listed below:

Type Aroclor	1242	1248	1254	1260	1262
Biphenyl Charge	4000#	4000#	4000#	4000#	4000#
Chlorination Time	6 Hrs.	8 Hrs.	10 Hrs.	12 Hrs.	14 Hrs.
Specific Gravity of Crude	1.349-58 at 65°C	1.408-18 at 65°C	1.498-508 at 65°C	1.558-69 at 90°C	1.580-9(at 90°C
Weight of Crude Batch	6670#	7580#	8450#	9600#	10,600#
Weight of Distilled Batch	6400#	7200#	8040#	9100#	9850#
Tons of 100% by-product HCl per Batch	1.24	1.43	2.27	2.47	2.70
Theoretical Molecular Weight	257.7	292.6	326.6	369.5	395.6

TRAN 006993

HARTOLDMON0043015

Dept. 246 - Process Description

AROCLOR

SECTION III

PROCESS IN DETAIL

COMPANY CONFIDENTIAL

B. CHLORINATION REACTION STEP

Chlorination of biphenyl is the only process step where a chemical reaction takes place. All other Aroclor process operations are mechanical. The starting raw materials for Aroclor production are biphenyl and chlorine gas.

Biphenyl is received in 8,000 10,000, and 20,000 gallon tank cars from Anniston, Alabama. The biphenyl in the tank cars is a solid mass because the crystallizing point of biphenyl is 68.7°C. Steam must be applied to the tank car coils to melt the biphenyl. It is necessary to melt a vent hole through the solid mass of biphenyl by insertion of a hairpin steam coil through the tank car dome before applying steam to the tank car coils. The vent hole avoids a pressure build-up in the bottom of the tank car and possible damage to the car. When the biphenyl is completely melted, it is sampled for identification and unloaded through the tank car standpipe by air pressure to the 25,000 gallon storage tank. Dry air is used to unload the biphenyl cars to keep the biphenyl free from moisture. The flash point of biphenyl is 112°C.

Chlorine gas is received in a 4 inch pipeline from the chlorine department. In order to facilitate operation of the chlorine liquefaction system, "snift" gas with a purity of 75-95% (the remainder being air) is transferred from the chlorine department. The normal pressure of the chlorine gas in Department 246 is 20-25 psig.

Biphenyl (4000#) is charged into each chlorinator from the measuring tank. The biphenyl charge in the measuring tank can be regulated by valves at different overflow levels. The four overflow levels on the measuring tank permit biphenyl charges of 1800, 2800, 3600, and 4000 pounds. Two pounds of anhydrous ferric chloride are charged to the chlorinators after the biphenyl is charged.

Chlorination is carried out in five chlorinators. Each chlorinator is three feet in diameter by sixteen feet high, and constructed of steel. Four of the chlorinators has a catalyst bed which is 2'3" in diameter by 8 feet high. The catalyst bed consists of 1-1/2 inch diameter by 2 inches long pieces of pipe which are similar in nature to raschig rings. The fifth chlorinator is identical to the other chlorinators except that it has no catalyst basket. The catalyst beds in four of the chlorinators will be removed as they fail mechanically

TRAN 006994

After charging the chlorinator, circulation of the charge is started before the chlorine feed is begun to maintain an even distribution of the ferric chloride catalyst. The temperature of the biphenyl is 110°C-120°C at the start of the chlorination. The chlorinator mass reaches 120°C-130°C within 30 minutes after the biphenyl is charged.

HARTOLDMON0043016

COMPANY CONFIDENTIAL

PROCESS IN DETAIL (Cont'd.)

B. Chlorine gas from the chlorine department passes through a Brink mist eliminator and evaporator before entering the chlorinator. The mist eliminator removes most of the impurities, and the evaporator insures that all of the chlorine is gaseous.

The purified chlorine gas is admitted to the bottom of the chlorinator through a distributor plate (sparger) and passes through the catalyst bed. A chlorinator temperature less than 170°C is maintained during the chlorination reaction to avoid sublimation and subsequent condensation of biphenyl in the off-gas system. Each chlorinator is equipped with a Brink mist eliminator. The purpose of the off-gas mist eliminators is to trap entrained particles of Aroclor and biphenyl.

The chlorination temperature in the chlorinators is controlled by automatic control of the air flow through the external air-cooled heat exchanger. The chlorination temperature must be at least 120°C 30 minutes after the start of the batch and no more than 170°C to finish off a batch. The normal batch temperature is 150°C. The louvers of the air-cooled heat exchanger located in the external circulating line of the chlorinator are controlled such that the batch temperature will remain between 120°C and 170°C. The temperature of the batch is recorded at four different points: (1) in the center of the chlorinator, (2) just above the chlorine sparger in the chlorinator, (3) at the discharge of the chlorinator pump, and (4) at the discharge of the air-cooled heat exchanger. Point 1 is alarmed for high temperatures, and point 4 is alarmed for low temperatures. As a safety device, a high temperature sensing element is positioned at point 2 to shut off the chlorine gas flow if the reaction temperature exceeds 190°C.

The batches are continuously circulated at an average flow rate of 200-220 GPM from the bottom of the chlorinator, up through the air-cooled heat exchanger, and back into the top of the chlorinator over the catalyst bed. Chlorine feed up to a maximum of 1500 pounds per hour is fed into each chlorinator through a flow recorder-integrator which is alarmed.

Progress of the chlorination reaction is checked periodically as needed after 80% chlorination as measured by the recorder-integrator.

The degree of chlorination is measured by determining the specific gravity of a sample taken from the circulating line. More frequent gravity checks are made when approaching the end of chlorination.

HARTOLDMON0043017

COMPANY CONFIDENTIAL

PROCESS IN DETAIL

C. AERATION AND DISTILLATION

When chlorination is complete, the crude Aroclor is pumped into number two blow tank (capacity 2000 gallons). The crude Aroclor is aerated in the #2 blow tank for two hours or more with dry air. Aeration of crude Aroclor removes most of the free hydrogen chloride.

Crude aerated Aroclor is transferred from the #2 blow tank to the #1 blow tank. The #1 blow tank is used as a crude Aroclor feed tank to the stills. Crude aerated Aroclor is transferred from the #1 blow tank to vacuum stills through an automatic control valve which maintains a constant level in the stills. Under normal conditions the automatic feed to the stills is shut off after distilling bout 75,000 pounds of Aroclor. (This is equivalent to filling 7 still receivers). The still is then boiled down until a temperature difference between the still coil outlet and vapor temperature approaches 40°C. At this point distillation is discontinued and all but a small heel of the residue is drawn off to drums and discarded or sold as Montar. The still is immediately recharged with crude Aroclor and 200 pounds of lime is added directly to the still pot. Hydrated lime is received in 50 pound bags. The lime neutralizes any residual HCl in the still liquor and prevents sublimation of ferric chloride during the distillation period. Distillation of Aroclors is done under vacuum automatically controlled. The best performance is obtained at a steady vacuum which can be pre-set by a controller between 30-50 mm Hg. Abs.

Natural gas is used to heat the coil of the Aroclor still furnaces. The pressure of the gas burner (eclipse, st. 108.5, 2", #568, 600,000 BTU/hr.) is adjusted as needed for production requirements. The normal gas pressure is 3-5 psig.

D. BLENDING, FILTRATION, AND STORAGE

When the still receiver is filled, the distilled Aroclor is pumped to the blend tank (2000 gallon capacity). After two fillings of the receiver tank have been pumped to the blend tank, approximately 40 pounds of attapulgus earth is added to the distilled 1242 Aroclor. All other Aroclors are earth-treated with 20 pounds of Attapulgus earth. Regular Attapulgus earth is received in 50 pound bags. The mixture is agitated and filtered to the finished product tank (2000 gallon capacity) through a 36 inch stainless steel Sparkler Filter. The attapulgus earth is roasted at 250°C for a minimum of four hours in a Grieve-Hendry drying oven before addition to the blend tank. The purpose of earth heat treatment is to remove any moisture in the earth and activate it. The attapulgus earth absorbs water and ionic impurities. This improves the electrical-quality properties of the Aroclor.

HARTOLDMON0043018

Dept. 246 - Process Description

AROCLOR

SECTION III

COMPANY CONFIDENTIAL

PROCESS IN DETAIL

D. BLENDING, FILTRATION AND STORAGE (Cont'd.)

The filter press is cleaned after about 5-7 batches or as needed. During the filtration, 2-16 oz. samples are taken to the laboratory for control analyses. If the control analyses pass specifications, the batch is transferred from the product tank to a storage tank. After several batches have accumulated in the storage tank, the contents of the tank are mixed, and composite samples are taken for lot analyses.

Three underground (15,000 gallon) tanks and five above-surface (each 20,000 gallons) are available for storage of the finished products.

The blend tanks, finished product tanks, and Aroclor 1242 and 1254 storage tanks are blanketed with nitrogen. The pressure of the nitrogen gas is 10 psig. Nitrogen blanketing maintains the electrica properties of the Aroclors.

The Aroclors from the storage tanks are drummed, pumped to tank cars, pumped to tank trucks, or transferred to Department A-246 or B-246 mixing tanks for the production of Pyranols, Inerteens, or Pydraul A-200.

Batches of Aroclor 1254-mix are mixed in the #1 blend tank. This operation consists of a mix of 10% xylene and 90% Aroclor 1254. Xylene is received in 55 gallon drums. The flash point of xylene is 85°F. Mixing, sampling and drumming of 1254-mix is accomplished directly from the blend tanks. After the blending operation, the blend tank must be cleaned. The bottom outlet of the tank is opened and the tank is cleaned out with live steam and then blown with air.

E. BY-PRODUCT HYDROGEN CHLORIDE TRAN 006997

The by-product hydrogen chloride from the chlorinators is collected in a common pipeline header and flows to the central HCl absorption unit to manufacture Muriatic Acid in Department F-218. If Department F-218 is unable to handle the off-gas, it may be sewered at Department 246 by passing through a Haveg S-K drowning jet. The removal of HCl from the off-gas concentrates the original quantity of hydrogen and air to a point well within the explosive limit. Therefore, it is essential to either dilute this gas going up the vent stack or increase its velocity past the flame propogation rate (15 ft/sec). This is accomplished by introducing a sufficient quantity of steam into the vent stack.

To remove vaporized and entrained impurities in the HCl from the chlorinators, the gas passes through a condenser and mist eliminator. The entrained liquid, which is primarily biphenyl, is sewered.

HARTOLDMON0043019

Dept. 246 - Process Description

AROCLOR

SECTION IV

COMMENTS ON PROCESS

COMPANY CONFIDENTIAL

CHLORINATION STEP

A. RAW MATERIAL YIELDS

Biphenyl and chlorine are reacted to form a chlorinated biphenyl called Aroclor. The yields on biphenyl and chlorine vary with the type of Aroclors produced. Each particular type of Aroclor has its own standard yield factors. Yields are not reported for the individual type on Aroclor each month. An average yield is reported monthly and compared with standard and theoretical yields which are calculated according to the quantities of the various Aroclors produced during the month.

Standard and theoretical conversion factors used in computing chlorine and biphenyl yields are listed below.

STANDARD CONVERSION FACTORS

AROCLOR	CHLORINE #/# Product	BIPHENYL #/# Product
1242	.9032	0.6180
1248	1.0323	0.5580
1254	1.6130	0.4978
1260	1.2903	0.4368
1262	1.3333	0.4163
1232	0.6882	0.7216
1254 Xylene	1.0452	0.4480

THEORETICAL CONVERSION FACTORS

AROCLOR	CHLORINE #/# Product	BIPHENYL #/# Product
1132-1232	0.6400	0.6891
1142-1242	0.8400	0.5919
1148-1248	0.9600	0.5357
1154-1254	1.0800	0.4754
1160-1260	1.2000	0.4147
1162-1262	1.2400	0.3976
1254-10% Xylene	0.9720	0.4279

TRAN 006998

HARTOLDMON0043020

Dept. 246 - Process Description

AROCLOR

SECTION IV

COMPANY CONFIDENTIAL

COMMENTS ON PROCESS

CHLORINATION STEP

B. CAPACITY

The monthly production capacity of Department 246 is 2,400,000 pounds of Aroclors on a 7 day per week basis. The capacity of the chlorinators is a function of the following variables.

1. Batch Cooling Rate - Chlorination of biphenyl is an exothermic reaction which produces 510 BTU's per pound of chlorine gas undergoing a reaction with biphenyl. Biphenyl can be chlorinate as fast as the exothermic heat can be removed from the batch and maintain a batch temperature of 150°C.

2. Chlorine Flow Rate - The reaction time decreases as the chlorine flow rate increases. The chlorine flow rate is approximately 1000 pounds per hour per chlorinator. A maximum chlorine flow rate of 1500 pounds per hour per chlorinator can be attained if desired. The concentration of chlorine in the "sniff" gas is another factor controlling the rate of chlorination.

3. Catalyst - The chlorination rate increases when ferric chloride catalyst is added to the charge. The best results are obtained when the biphenyl charge contains .05% ferric chloride catalyst.

C. QUALITY

Some of the factors which affect Aroclor quality are as follows:

1. Temperature - According to research experimental results, the chlorinator temperature must be greater than 120°C at the beginning of the chlorination reaction to produce stable Aroclors.

2. Catalyst - Good contact is necessary to produce stable Aroclors It is suspected that agitation and circulation of the reactants improve the effectiveness of the catalyst. The catalyst is also responsible for the chlorine positioning on the biphenyl molecu Ferric chloride catalyst may be responsible for producing the desired end product. Results of research work concerning catalyst and isomeric distribution are given in Appendix N.

HARTOLDMON0043021

Dept. 246 - Process Description

AROCLOR

SECTION IV

COMMENTS ON PROCESS

CHLORINATION STEP

COMPANY CONFIDENTIAL

C. QUALITY (Cont'd.)

3. Raw Material Purity - The purity of raw materials can affect the quality of Aroclors both directly and indirectly. In a direct manner, impurities which are ionic lessen the resistivity of Aroclors. Distillation of crude Aroclor separates most of the ionic impurities; however, minute impurities can be carried over to the receiver tanks. Attapulgus earth can remove the remaining impurities in most instances. If any ionic impurities remain after the earth treatment, the resistivity of the Aroclors will be low because such impurities will conduct electricity even in minute concentrations.

   In an indirect sense, impurities such as sulfates in the chlorine gas, will poison the ferric chloride catalyst and thus unstable Aroclors will be produced. The chemistry and mechanism of the catalyst poisoning are not known for certain.

4. Catalyst Basket - During the latter part of 1965, the catalyst basket was removed from one of the five chlorinators. The material produced in the chlorinator without the catalyst basket analyzed as normal material. This material was used by a customer with satisfactory results.

   The catalyst baskets may be removed from the other four chlorinators as they fail. The only restriction on material made without the catalyst basket is that it will not be sold to General Electric, or Westinghouse.

TRAN 007000

AERATION AND DISTILLATION

Steam is not applied to the coils of the blow tanks when aerating Aroclors 1142 and 1148. This prevents the loss of Aroclor vapors. Eighty psig steam may be applied to the coils when aerating other Aroclors. High moisture may be removed effectively by blowing the crude Aroclor with dry air.

Vacuum trouble on the stills is usually caused by flashing of product, air leaks, plugged vacuum lines, or improper functioning of the vacuum jets.

Flashing can usually be stopped by operating the still at a slower rate or increasing the flow of cooling water to the vapor condenser.

Vacuum trouble can be traced systematically from the jets and usually isolated.

High color and entrainment will result from overheating (around 25°C above normal distillation temperature) Aroclor, faulty operation of the distillation step, or boiling down the still too far. (Tars will carry over). The "tail-end" still fraction (tars) is a

HARTOLDMON0043022

Dept. 246 - Process Description

AROCLOR

SECTION IV

COMPANY CONFIDENTIAL

COMMENTS ON PROCESS

BLENDING AND FILTRATION

Attapulgus Earth is added in the blend tanks to reduce moisture and inorganic chlorides as well as improve electrical properties. If batches do not meet specification (See Appendix B), redistillation may be necessary.

The Attapulgus Earth is roasted for 4 hours at 250°C before addition to the blend tanks when earth treating Aroclor 1242.

HARTOLDMON0043023

AROCLOR

APPENDIX A

COMPANY CONFIDENTIAL

EQUIPMENT LIST

This section contains an equipment list with each piece of equipment listed by item numbers in a consecutive numerical sequence. Miscellaneous items of Dept. 246 such as Instruments have not been assigned Item numbers. Equipment without item numbers is not included in this equipment list. All equipment of Dept. 246 will have item numbers assigned sometime in the future. This equipment list should be expanded as additional item numbers are assigned.

Item No.	Equipment Name	Equipment Number	Description
101	Biphenyl Transfer Pump	19-0582 66-3930	Taber vertical submerged cent. pump, size C-3, 2½" inlet, 2" outlet. Connection bronze except shaft which is monel. Motor is 3 HP, 1800 RPM.
102	Biphenyl Storage Tank	21-2210	Tank purchased from Rogers and Wrigler. Capacity is 25,000 gallons. 10' 6" Dia. x 40'6" long. 3/8" plate shell. Design pressure is 50 psi.
103	Biphenyl Head Tank	21-0767 16-7225	Tank made by Graver. Dwg. C-799. Steel tank 4'6" ID x 5'6" str. side, dished heads, shell 3/8", top head 3/8", and bottom head 3/4" with 1/2" jacket over it and ending 9" up on tank side. Welded throughout. Test of tank is 60# and jacket is 105# hydro. pressure. Mixer is Mixco Model N33G75, gear driven propeller. Motor is 440/3/60 TEFC, 1725 RPM.
104	Biphenyl Feed	66-7224	Durco Horiz. Cent. pump. 2" inlet, 2" outlet. Cap. 100 GPM Motor is 7½ HP, 1760 RPM
105	Chlorinator #1	21-3261	Tank made by Nooter. Dwg. E-880. 3' ID x 16' long with plg. head. Shell 3/8" and head 7/16" thick, 3/16" jacket over lower half of tank.
106	Chlorinator #2	21-3245	Same as Item No. 105.

HARTOLDMON0043024

AROCLOR

APPENDIX A EQUIPMENT LIST (Cont'd.)

COMPANY CONFIDENTIAL

Item No.	Equipment Name	Equipment Number	Description
107	Chlorinator #3	21-3251	Tank made by Leader Iron Works. Otherwise, same as item No. 105.
108	Chlorinator #4	21-1283	Same as Item No. 107.
109	Chlorinator #5	21-1432	Same as Item No. 107
110	#1 Mist Eliminator	15-0581	Tank made of carbon steel. Element made of carbon steel. Design pressure is 50 psig. and design temperature is 300°F.
111	#2 Mist Eliminator	15-0582	Same as Item No. 110.
112	#3 Mist Eliminator	15-0583	Same as Item No. 110.
113	#4 Mist Eliminator	15-0584	Same as Item No. 110.
114	#5 Mist Eliminator	15-0586	Same as Item No. 110.
115	Chlorine Mist Elim.	21-4042	Tank made by Alpha. Carbon steel construction. Coded tank. Element 316 stainless steel. 15" dia., glass fiber inverted type. Design pressure is 50 psig and design temperature is 300°F.
116	Chlorine Vaporizer	38-5487	Chlorine vaporizer made by Armstrong Company. 8-5/8" OD x 11' long. Carbon steel construction. Chlorine side steel designed for 250 psig. at 400°F. Steam side designed for 100 psig at 400°F.
120	Knockout		Steel vertical 60 gal. tank.
121	Chlorinator #1 Pump	19-4305 66-8109	Durco Mark II horiz. cent. pump. Inlet is 3" and outlet is 2", ductile iron, with Durametallic seal and Manzel lubricator. Rate is 200 GPM at 25' static head Sp. Gr. of 1.5. Motor is 10 HP, 1800 RPM.

TRAN 007003

HARTOLDMON0043025

AROCLOR

COMPANY CONFIDENTIAL

APPENDIX A EQUIPMENT LIST (Cont'd.)

Item No.	Equipment Name	Equipment Number	Description
122	Chlorinator #2 Pump	19-4306 66-8110	Same as Item No. 121
123	Chlorinator #3 Pump	19-4307 66-8111	Same as Item No. 121
124	Chlorinator #1 Pump	19-4308 66-8112	Same as Item No. 121
125	Chlorinator #5 Pump	69-3892 66-6509	Same as Item No. 121.
126	Blow Tank #2	21-2086	Tank made by Graver. Dwg. E-863. 7' x 7' str. sides, dished heads 1/2", shell 3/8", 5 turn coil of 2" pipe supported on brackets welded.
127	Blow Tank #2 Pump	66-2956 69-0577	Taber horiz. cent. pump. Type 1-2. 2½" x 2". Semi-steel with monel shaf and water jacketed stuffing box. At 20' static head, rate is 80 GPM, 1.5 Sp. Gr. at 500°F. Motor is 3 HP, 1800 RPM.
128	Air Dryer	14-0104	Anders Lykens Corp. Air dehydrator. Two code welded tanks filled with 55 lbs. activated alumina. Dwg. #6456.
129	Blow Tank #1 Pump	19-0629 66-9080	Same as Item No. 127.
130	Still #1	20-0043	Vacuum still purchased from Graver. Dwg. C-809. Size 6' Dia. x 5'6" lg. on str. side, ½" shell, dished head 5/8". 60# hydro. pressure test.
131	Furnace #1	27-0045	Steel heater furnace. Steel shell 3/16" x 3'9" dia. x 4' 10½" lg. lined with insulating fire brick. One coil 2" xHy pipe, 12 turns formed into a 2 dia. coil with spare blocks and legs. Dwg. E-886.
132	Still #1 Pump	19-0594	Taber vert. sub. cent. pump. type 1-2 Casing, yoke, and impeller made of steel. 2" inlet and 2" outlet. Length 7'9". Capacity is 75 GPM, static head 15', Sp. Gr. 1.8 at 700°F Motor is 5 HP, 1750 RPM

TRAN 007004

HARTOLDMON0043026

Dept. 246 - Process Description

AROCLOR

APPENDIX A

EQUIPMENT LIST (Cont'd.)

COMPANY CONFIDENTIAL

Item No.	Equipment Name	Equipment Number	Description
133	Still #2	20-0062	Vacuum still purchased from Nooter. Dwg. 6944. 6' ID x 11'10" str. shel internal pipes, standard dished heads, Glass wool insulation 3" with 1/2" finished coat.
134	Furnace #2	20-0066	Same as Item No. 131.
135	Still #2 Pump	66-1759 69-1277	Taber vertical sub. cent. pump. Type CL-4, 2½ x 2", size 384. Pump is dynamo steel. Capacity is 75 GPM at 25' static head, Sp. Gr. 1.8. Motor is 7½ HP, 1750 RPM.
136	Condenser #1	38-0770	Heat exchanger made by Nooter. Dwg. B-651. 12" dia. 5' long having nineteen 2" OD 11 ga. monel tubes, monel tube sheets, monel reducer, and carbon steel jacket and back up rings on flanges.
137	Condenser #2	38-1378	Same as Item No. 136.
138	Receiver Tank #1	21-0771	Vacuum receiver tank made by Nooter. Dwg. C-795. Size is 5'6" dia. x 5'6" str. side, 3/8" shell, 1/2" bottom and removable head. 2" IP, size xHy monel coil with 2" inlet and 1" outlet. 3 turns, 5' dia. along side and 3 turns spiral on bottom. 60# hydro. pressure test on tank and 300# on coil.
139	Receiver Tank #2	21-1377	Tank made by Nooter. Dwg. C-795. Same as Item No. 138.
140	Receiver Pump #1	66-9067 69-0565	Blackmer pump. Type PA-501, bronze rotary pump, monel shaft, C.I. base. Capacity is 50 GPM, 1.65 Sp. Gr., 350 to 500°F. Motor is 2 HP, 1750 RPM.
141	Receiver Pump #2	66-5670 69-1258	Same as Item No. 140.

TRAN 007005

HARTOLDMON0043027

AROCLOR

COMPANY CONFIDENTIAL

APPENDIX A EQUIPMENT LIST (Cont'd.)

Item No.	Equipment Name	Equipment Number	Description
142	Blend Tank #1	21-0779	Tank made by Graver. Dwg. E-862. Welded steel tank, 7' dia. x 7' high dished heads ½", shell 3/8". All surfaces sprayed with .005" zinc then .003" tin. 2" xHy pipe coil and supports. Case bronze stirrer and bronze shaft. Test of tank is 60# and coil is 300# hydro. pressure
143	Blend Tank #2	21-1399 66-0217.	Same as Item No. 142.
144	Blend Tank Pump	19-1757 66-3718	Taber Horiz. Centrifugal pump. 304 s.s. 2" x 1½" capacity 60 GPM, 100' head. Motor is 10.0 HP, 1800 RPM.
145	36" Sparkler Filter	15-0238	Filter made by Sparkler Mfg. Co., 33-P-12 horizontal plate filter. Type 304 s.s. Jacket tested for pressure of 30 psi.
146	Finished Product Tank #1	21-0780	Filtrate receiver tank. Dwg. E-862. Same as Item No. 142.
147	Finished Product Tank #2	21-1400	Tank made by Nooter. Otherwise, same as Item No. 142.
148	Storage Tank #3	21-0768	Tank made by Graver. Dwg. C-609. Horizontal steel, 10' dia. x 26' long on str. side. dished heads, shell ½", head 1/16". Test of tank is 60# and coil is 300# hydro. pressure. All coils, supports, inside surface sprayed with .005" zinc and .003" tin.
149	Storage Transfer Pump #3	19-0585 66-0853	Taber Vert. Sub. Pump. Dwg. A-387. Type C-3, 2" x 2", C.I. body, length 11'6". Cap. 50 GPM, 60' static head, Sp. Gr. 1.18 at 170°F. Motor is 3 HP, 1800 RPM.
150	Storage Tank #4 Tank #4	21-0769	Same as Item No. 148
151	Storage Transfer Pump #4	19-0584 66-1501	Taber Vert. Sub. Pump Type 1-2. 2½" x 2". Length 11'6". Cap 50 GPM at 40' static head. Motor is 3 HP, 1800 RPM.

HARTOLDMON0043028

Dept. 246 - Process Description

AROCLOR

COMPANY CONFIDENTIAL

APPENDIX A — EQUIPMENT LIST (Cont'd.)

Item No.	Equipment Name	Equipment Number	Description
152	Storage Tank #5	21-1310	Tank made by Leader Iron Works. C-609. 10'OD x 26' long on str. shell. Same as Item No. 148 for other characteristics.
153	Storage Transfer Pump #5	19-0929 66-0856	Same as Item No. 151, except length is 4'7".
154	Storage Tank #8	21-3526	Slpha tank 12'6" dia. x 22' high. 20,000 gllon storage capacity. Aluminum constructed Dwg. TS-D-3011.
155	Storage Transfer Pump #8	19-3172 66-2651	Durco pump, model WH2 Alloy constr. 2" x 1½", 8" impeller. Cap. 160 GPM at 55' head. Motor is 7½ HP, 1740 RPM.
156	Storage Tank #7	21-2404	Alpha tank. 13' OD x 20' high. Vertical tank, constructed of 3/8" mild steel. Capacity is 20,000 gals.
157	Storage Transfer Pump #7	19-2077 66-1691	Pump made by Blackmer. Monel shaft, 2½" x 2½". Cap. 90 GPM. 15' head. Motor is 3 HP, 1750 RPM.
158	Scales	24-0246 24-0187	Made by Toledo Scale Co. 800# capacity, dial type scale.
167	Blow Tank #1	21-0750	Tank made by Graver. Dwg. E-863. 7' dia. x 7' str. side, dished heads ½' shell 3/8". 5 turn coil of 2" xHy pipe.
169	Surge Tank	22-0751	Cyclone collector made by Graver. Dwg. B-695. 48" dia. x 27" on str. side, 3' 6" long and tangential inlet near top of side. 3/16" steel throughout of welded construction.
170	City Water Pump #1	69-1083 69-3365	Taber Horiz. pump, Model CH5, 3" x 2½" 9" impeller. Cap. 180 GPM, 50' head. Motor is 7½ HP, 1800 RPM.
171	City Water Pump #2	69-2078 66-1796	Same as Item No. 170
172	Off-Gas Mist Eliminator	21-5150	30"OD x 13'-3" straight side, steel construction, vertical for Brink Filter Element #15-0630(#2496 carbo
173	Off-Gas Heat Exchanger	38-5588	8'long x 16" OD, 2 pass on tube side, 5 baffles, steel construction

TRAN 007007

HARTOLDMON0043029

CONFIDENTIAL

APPENDIX A — EQUIPMENT LIST (Cont'd.)

Item No.	Equipment Name	Equipment Number	Description
180	Exhaust Blower	11-0265	Made by American Blower Co. Type 450E. Capacity is 6408 SCFM at 1310 RPM. Dwg. E-10699. Motor is 15 HP.
185	Coke Scrubber #1	21-0756	Scrubber liquor tank made by Graver. Dwg. C-800. 4'6" Dia. x 5'6" on Str. Side. Coil 3 turns of 1½" x Hy pipe.
186	Coke Scrubber #2	21-1396	Same as Item No. 185.
200	Cyclone Separator	21-1413	Separator made by Heintz Stee. 3' ID x 6' high tangential separator with integral vapor pipe complete.
201	Air-cooled Heat Exchanger #5	38-5328	Air cooled heat exchanger made by Disler. Cooling capacity is 1,200,00 BTU/hr. Steel construction except fo aluminum fins. Fan motor is 2 HP, 1150 RPM.
203	Steam Vacuum Jet #1	35-3523	#2 ½ Worthington 3-stage vacuum jet.
204	Steam Vacuum Jet #2	35-1686	Same as Item No. 203.
205	Steam Vacuum Jet #3	35-3533	3-stage porcelain Kubati vacuum ejector with 10" ID porcelain conden ser. Jet has a capacity of 10#/hr. air at standard conditions. Jet designed for 150# steam and 2 mm Hg. absolute.
206	Off-gas Drowning Jet	35-4756	Made by Schutte-Koertig. 8" Haveg fume scrubber. Complete with stand-ard nozzle.
207	Drying Oven	14-0138	Grieve Hendry drying oven, 440 V., 3 phase, 60 cycle, manual reset temp. controller range 0-400°C.
210	Air-cooled Heat Exchanger #1	38-5564 66-8113	Same as Item No. 201.
211	Air-cooled heat Exchanger #2	38-5565 66-8114	Same as Item No. 201.
212	Air-cooled Heat Exchanger #3	38-5566 66-8115	Same as Item No. 201.
213	Air-cooled Heat Exchanger #4	38-5567 66-8116	Same as Item No. 201.

TRAN 007008

HARTOLDMON0043030

COMPANY CONFIDENTIAL

AROCLOR

APPENDIX A — EQUIPMENT LIST (Cont'd.)

Item No.	Equipment Name	Equipment Number	Description
214	Air Dryer	14-0138	
215	City Water Circulating Pump	69-4363 66-8179	Worthington 3CNFE84 with 8" impeller and Monsanto standard base.
216	Polish Filter #9 Storage	15-0633	Alsop filter model No. PAK 125-4, 316 s.s. 6,000 in.^{2} filtration area 840 in.^{3} volume.
217	Polish Filter #10 Storage.	15-0634	Same as Item No. 216.
218	Polish Filter #11 Storage	15-0635	Same as Item No. 216.
None	Chlorine Pressure Recorder	29-1547	Made by Taylor Instrument Co. Pressure Recorder with 2 pens. Range 0-100.
None	#5 Chlorinator Flow Recorder	29-2019	Made by Taylor Instrument Co. Flow Recorder - Controller Cat. No. 137RF135. 12" chart, 0-10 Sq. root chart.
None	Water Meter	29-2486	Made by Worthington Corporation. 3" model IH turbine type water meter.
None	#1 Still Temperature Recorder	29-3885	Made by Leeds & Northrup Co. Temperature Recorder. Range 0-400°C
None	#1 Still Absolute Pressure Controller	29-1170	Made by Taylor Instrument Co. Absolute pressure Recorder - Controller.
None	200# Steam Flow Recorder	29-0835	Made by Bailey Meter Company Flow Recorder.
None	#2 Still Absolute Pressure Controller	29-3353	Made by Taylor Instrument Company. Absolute Pressure Recorder - Controller.
None	#2 Still Temperature Recorder	29-0244	Made by Leeds & Northrup Co. 6 point Temperature Recorder.
None	#2 Still Level Controller	29-1463	Made by Taylor Instrument Co. Liquid Level Recorder - Controller.

HARTOLDMON0043031

Dept. 246 - Process Description

AROCLOR

APPENDIX A EQUIPMENT LIST (Cont'd.)

Item No.	Equipment Name	Equipment Number	Description
None	Chlorinator Temperature Recorder	29-0288	Made by Leeds & Northrup Co. 12 point Temperature Recorder.
None	#1 Blow Tank Temperature Recorder	29-2916	Made by Taylor Instrument Co. Temperature Recorder Controller. Adjusts 200# steam to #1 Blow Tank Cat. #86 RM43185-12.
None	80# Steam Flow Recorder	29-5452	Made by Foxboro Company. Type T37, recording flow meter with integrator and indicator. Meter body 316 s.s. Integrator for 80#, 400°F. steam.
None	200# Steam Flow Recorder	29-5453	Made by Foxboro Company. Type T37 Recording Flow meter with integrator and indicator. Meter body 316 s.s. Integrator for 200#, 510°F. steam.

HARTOLDMON0043032

Dept. 246 - Process Description

AROCLOR

APPENDIX B

COMPANY CONFIDENTIAL

SPECIFICATIONS

The following is a list of the raw materials used for the manufacture of Aroclors. Specification sheets are included where they exist.

Material Code	Raw Material
82601	Biphenyl
33500	Ferric Chloride
38800	Lime
19409	Attapulgus Earth
81059	Chlorine
43099	Nitrogen
64005	Xylene

The following is a list of the finished products manufactured in department 246. Specification sheets are included where they exist.

Product Code	Product
811.12	Aroclor 1254-10% Xylene
811.15	Aroclor 1232
81101(Elect & Non-Elect)	Aroclor 1242
81102 (Elect & Non-Elect)	Aroclor 1248
81103(Elect & Non-Elect)	Aroclor 1254
81105(Elect & Non-Elect)	Aroclor 1260
81107	Aroclor 1262
81101-81102 (Mix)	1242 - 1248 Mix
82868	Montars 1, 2, 3 and 4

HARTOLDMON0043033

MONSANTO CHEMICAL COMPANY
ORGANIC CHEMICALS DIVISION
W.G. KRUMMRICH PLANT
RAW MATERIAL
SPECIFICATION

MATERIAL CODE: 82601
USING DEPTS.: 246
SUPPLIER: ANNISTON PLANT

Issued DEC 8 1964
W. G. Krummrich Plant
by M. D. Dsel

MATERIAL: DIPHENYL (BIPHENYL)

CHEMICAL FORMULA

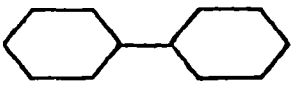

MOL WT. 154.20

SUPERSEDES SPECS OF: 4/6/51

SAMPLE FOR ANALYSIS: 2 x 16 oz. W.M.Bottles

UNRESTRICTED INFORMATION

Routine Tests	Specification	Method Number
Appearance and Color	Light Yellow Cryst. Solid	10,252
Crystallizing Point	68.7°C, min.	10,298
GENERAL INFORMATION		
Distillation Range:		
First Drop to	2.5°C, max.	10,299
Dry Point	Must include 255°C within Range	

This specification is the property of Monsanto Chemical Company and is for internal use only.

COMPANY
CONFIDENTIAL

TRAN 007012

IN 88 (REV. 12/56)

Monsanto
ORGANIC CHEMICALS DIVISION
W. G. Krummrich Plant
RAW MATERIAL
SPECIFICATION

MATERIAL CODE	MATERIAL
33500	Ferric Chloride Anhydride
PLANT: WGK	USING DEPTS.: 233
DATE EFFECTIVE: JAN 7 1966	SUPPLIER: McKesson & Robbins

APPROVALS

PRODUCTION: T. W. Dalton	RESEARCH: M. A. Terpstra
PROCUREMENT: C. A. Pratle	QUALITY CONTROL (Chief Chemist): W. J. Gresham

GENERAL DESCRIPTION

CHEMICAL FORMULA

$FeCl_3$

mol wt. 162.21

SUPERSEDES SPECS OF	SAMPLE FOR ANALYSIS	ISSUED BY
11/15/62	1 x 8 oz. W.M. Bottle	J. P. Prader

UNRESTRICTED INFORMATION

CHARACTERISTIC	LIMITS	METHOD
		J.F.Q.
Appearance	Black powder or Granules	16-A
Assay	97.0%, min.	22-570
Sulfates	0.05%, max.	120-570
Ferrous Salts	Trace, max.	S-570-1
Solubility:		112-B
10:10 of Water	Complete to slightly turbid, max.	
10:10 of Formula 30 Alcohol	Complete to slightly turbid, max.	

COMPANY CONFIDENTIAL

TRAN 007013

(R) Routine Analysis, All others Analysed by request only.

HARTOLDMON0043035

Monsanto
ORGANIC CHEMICALS DIVISION

RAW MATERIAL SPECIFICATION

MATERIAL CODE	MATERIAL
38800	Lime, Hydrated
PLANT: WGK	USING DEPTS.: 222, 246
DATE EFFECTIVE: 7/21/66	SUPPLIER: Mississippi Lime Co.

APPROVALS

PRODUCTION: P. E. Heisler	RESEARCH: M. E. Gibbs
PROCUREMENT: C. A. Pratte	QUALITY CONTROL (Chief Chemist): W. J. Gresham

GENERAL DESCRIPTION

CHEMICAL FORMULA: $Ca(OH)_2$

SUPERSEDES SPECS OF	SAMPLE FOR ANALYSIS	ISSUED BY
6/20/63	1 x 16 oz. W.M. Bottle	

CHARACTERISTIC	LIMITS	METHOD
Appearance	Fine white or slightly gray powder, free from lumps or gritty material	10,188
Assay ($Ca(OH)_2$)	92.00%, min.	10,191
Carbonates as ($CaCO_3$)	3.00%, max.	10,193
Magnesium	0.50%, max.	10,192
Sulfates (as SO_3)	0.30%, max.	10,189

Supplier's certificate of analysis to be sent on day of shipment to:

Chief Chemist, Monsanto Co., Monsanto, Ill.

COMPANY CONFIDENTIAL

TRAN 007014

(R) Routine Analysis. All others Analyzed by request only.

HARTOLDMON0043036

Monsanto
ORGANIC CHEMICALS DIVISION
W. G. Krummrich Plant
RAW MATERIAL
SPECIFICATION

MATERIAL CODE: 19409	MATERIAL: Attapulgus Earth 200/UP
PLANT: WGK	USING DEPTS.: 246
DATE EFFECTIVE: 1-21-66	SUPPLIER: Mineral & Chemical Phillips Corp.

APPROVALS

PRODUCTION: P. E. Heisler	RESEARCH: W. D. Robinson
PROCUREMENT: C. A. Pratte	QUALITY CONTROL (Chief Chemist): W. J. Gresham

GENERAL DESCRIPTION: Clay

CHEMICAL FORMULA:

SUPERSEDES SPECS OF: 11/15/62	SAMPLE FOR ANALYSIS: 2 x 16 oz. W.M. Bottles	ISSUED BY: J. P. Prader

CHARACTERISTIC	LIMITS	METHOD
UNRESTRICTED INFORMATION		
(R) Volatile Matter (at 950°C.)	6 - 8%	
(R) Mesh Test:		
Through USS 325	90%, min.	

This material is not accepted without the supplier's analysis of the above properties.

COMPANY CONFIDENTIAL

TRAN 007015

(R) Routine Analysis, All others Analyzed by request only.

HARTOLDMON0043037

Monsanto
ORGANIC CHEMICALS DIVISION

RAW MATERIAL SPECIFICATION

MATERIAL CODE	MATERIAL
43099	Nitrogen Gas
PLANT: WGK	USING DEPTS.: See Below (3)
DATE EFFECTIVE: FEB 18 1965	SUPPLIER: Air Reduction Sales Co.,

APPROVALS

PRODUCTION	RESEARCH
J.M.C., P.E.H., W.B.P., C.H.S.	R.W.B., H.W.K., M.A.T., W.D.R., W.F.S. J.A.S.
PROCUREMENT	**QUALITY CONTROL (Chief Chemist)**
C.H.C.	W.J.G. C.H.R. J.S.M.

GENERAL DESCRIPTION — CHEMICAL FORMULA

Grade - O. P. Special Nitrogen

SUPERSEDES SPECS OF	SAMPLE FOR ANALYSIS	ISSUED BY
New	---	M. D. Dealy

CHARACTERISTIC	LIMITS	METHOD
Assay (1)	99.9%, min.	(2)
Oxygen	0.1%, max.	
Hydrogen	0%	
DewPoint	-76°F	

	Typical Analysis
Nitrogen	99.78%
Argon	0.12%
Oxygen	0.1%
Carbon Dioxide	<.00005%
Acetylene	<.00005%

(1) Nitrogen plus inert rare gases
(2) Any analyses to be obtained from supplier on request.
(3) B-215, C-216, 244, 246, 247, E-254, A-255, 256, 267, 270.

COMPANY CONFIDENTIAL

TRAN 007016

(R) Routine Analysis, All others Analysed by request only.

HARTOLDMON0043038

Monsanto
ORGANIC CHEMICALS DIVISION

RAW MATERIAL SPECIFICATION

MATERIAL CODE	MATERIAL
64005	5° Xylene
PLANT	**USING DEPTS.**
WGK	A-255
DATE EFFECTIVE	**SUPPLIER**
6/21/66	Chem Tech

APPROVALS

PRODUCTION: J.E. Smith	RESEARCH: C. Eaker (Nitro)
PROCUREMENT: A. H. Smith	QUALITY CONTROL (Chief Chemist): W. J. Gresham

GENERAL DESCRIPTION

CHEMICAL FORMULA

$C_6H_4(CH_3)_2$

mol. wt. 106.16

SUPERSEDES SPECS OF	SAMPLE FOR ANALYSIS	ISSUED BY
7/12/63	1 x 16 oz.	J. P. Prader

UNRESTRICTED INFORMATION

	CHARACTERISTIC	LIMITS	METHOD
(R)	Appearance	Clear Colorless liquid	--------
(R)	Sp. Gr. @15.5/15.5°C.	0.860 - 0.870	T-2516
(R)	Distillation Range		T-2518
	1st Drop	137°C., min.	
	Dry Point	143°C., max.	
	100% over in	5°C., max.	
	Acidity	No free acid	-------
	Sulfur compounds	Free of H_2S and SO_2	-------

Supplier's certificate of analysis to be sent on day of shipment to:

Chief Chemist, Monsanto, Company, Monsanto, Ill.

COMPANY CONFIDENTIAL

TRAN 007017

(R) Routine Analysis, All others Analyzed by request only.

HARTOLDMON0043039

Monsanto
ORGANIC CHEMICALS DIVISION

FINISHED PRODUCT SPECIFICATION

PRODUCT		DEPT.
CHLORINE, Liquid		232
PLANT	PRODUCT CODE	USE
WGK	81059	Sales and Internal
DATE EFFECTIVE	SALES CODE	
JUN 29 1966	3060-000-06-03	

APPROVALS

PRODUCTION	RESEARCH
T. W. Dalton	N. F. Mueller
SALES	QUALITY CONTROL (Chief Chemist)
W. E. Ault	W. J. Gresham

GENERAL DESCRIPTION — CHEMICAL FORMULA

MOL WT. 70.914

SUPERSEDES SPECS. OF	SAMPLE FOR ANALYSIS	ISSUED BY
6/24/63	1 x 40 ml. Beaker 3/4 full	J. P. Prader

CHARACTERISTIC	LIMITS	METHOD
UNRESTRICTED INFORMATION		
(R) Appearance	Clear heavy liquid	10,748
(R) Color	Amber to greenish yellow	10,748
(R) Moisture	.015%, max.	12,793
(R) NVM	.01%, max.	12,793
Iron as:		10,688
Fe.	*Report %	
$FeCl_3.6H_2O$	Report %	

*When used in manufacture of ACl products, the specification on Iron as Fe is 20 ppm max. (H.V.Moss)

For use in Depts. 264, 258, 238, 243, 244 and 251.

COMPANY CONFIDENTIAL

TRAN 007018

(R) Routine Analysis. All others Analyzed by request Only

HARTOLDMON0043040

MONSANTO CHEMICAL COMPANY
ORGANIC CHEMICALS DIVISION
W. G. Krummrich Plant
FINISHED PRODUCT SPECIFICATION

PRODUCT CODE: 81115 | DEPT. OR JOB: 246
USE: Internal J.F.Q.
SALES CODE:

Issued APR 7 1964
W. G. Krummrich Plant
By W. D. Dsdy

PRODUCT (Trade Name): Aroclor 1232 — TYPE: (MCS - 236)
PRODUCT (Chemical Name): 32% Chlorinated Biphenyl — TYPE:
CHEMICAL FORMULA:

MOL WT.:

SUPERSEDES SPECS OF: New
SAMPLE FOR ANALYSIS: 2 x 16 oz. W. M. Bottles

Routine Tests	Specification	Method No
Appearance	Clear Liquid	
Sp. Gr. @25/15.5°C	1.266 - 1.276	10,114
Acid Number	0.014 mg. KOH/grm. max.	10,087
Color, APHA	100, max.	10,084
H_2O	35 ppm., max.	10,620
General Tests		
Chlorine	31.5 - 32.5%	

This specification is for internal use only.

COMPANY CONFIDENTIAL

TRAN 007019

HARTOLDMON0043041

MONSANTO CHEMICAL COMPANY
ORGANIC CHEMICALS DIVISION
Krummrich and Anniston
FINISHED PRODUCT SPECIFICATION

PRODUCT CODE: 81101-82612
DEPT. OR JOB: WGK-246-Ann.27
USE: Sales
SALES CODE: 1040-240-04/11/16-03/09

Issued
W. G. Krummrich Plant
By M D Daly

PRODUCT (Trade Name): Aroclor 1242
TYPE: Non-Electrical Grade
PRODUCT (Chemical Name):
TYPE:
CHEMICAL FORMULA: Mixture
MOL WT.
SUPERSEDES SPECS OF: 5-4-61
SAMPLE FOR ANALYSIS: 3 x 16 oz. W. M. Bottles

UNRESTRICTED INFORMATION

Routine Tests	Specification	WGK	Anniston Method No.
Condition	Clear	10084	G-1
Color, APHA	100 max.	10084	046
Sp. Gr. (25/15.5°C)	1.381 - 1.392	10114	052
Acidity (mg. KOH/g.)	0.010, max.	10087	050
Moisture (H_2O) (ppm.)	50, max.	10620	047
General Tests			
Distillation Range (ASTM D-20 Corrected)		10117	14-31-54
10% Distilled by wt.	325°C, min.		
90% " " "	360°C, max.		
Viscosity @100°F (SUS)	82-92	10086	049
Flash Point (°F)	338 - 392	10123	14-28-54
Fire Point	None	10123	14-28-54

COMPANY CONFIDENTIAL

TRAN 007020

IN 84 (REV. 12/68)

HARTOLDMON0043042

MONSANTO CHEMICAL COMPANY
ORGANIC CHEMICALS DIVISION

W.G.K. and Anniston
FINISHED PRODUCT
SPECIFICATION

PRODUCT CODE	DEPT.
81102	246 WGK 27 Ann.

USE: Sales

SALES CODE: 1040-260-04/11/16-03/09

Issued 1/10/64
W. G. Krummrich Plant
By M. D. Dsely

PRODUCT (Trade Name) TYPE
Aroclor 1248 Electrical Grade (Pyranol 1498)

PRODUCT (Chemical Name) TYPE

Corrected 2-16-64

CHEMICAL FORMULA

Mixture

MOL WT.

SUPERSEDES SPECS OF	SAMPLE FOR ANALYSIS
2-12-60	3 x 5 pt. Amber Bottles

UNRESTRICTED INFORMATION

Routine Tests	Specification	Method No's WGK	Anniston
Color, APHA	50, max.	10,084	14-44-5
Condition	Clear	10,084	G-1
Sp. Gr. @65/15.5°C	1.405 - 1.415	10,114	14-49-5
Acidity (mg. KOH/gm.)	0.010, max.	10,087	14-42-5
Moisture	35 ppm., max.	10,620	14-53-5
Refractive Index @25°C	1.6285 - 1.6305	10,125	14-34-5
Inorganics (Free) Chlorides	0.05 ppm., max.	T-2092	014
Pour Point	0°C, max.	10,115	14-27-54
Dielectric Constant (1000 cycles @100°C)	4.5 - 4.7	11,608	14-36-54
Resistivity (500 VDC @100°C 0.1" GAP) as OHM-CM x 10^9	500, min.	11,607	14-35-57
Hydrolysis Stability Test (as Chlorides)	1.0 ppm., max.	T-2087	010
Monsanto Stability Test (as Chlorides)	0.5 ppm., max.	11,503	14-61-57
Distillation Range (ASTM D-20, Corrected)		10,117	14-31-54
10% Distilled by Wt.	345°C, min.		
90% Distilled by Wt.	385°C, max,		

General Tests (made only on request)

Sulfates	None	12,169 - - -
Dielectric Strength @25°C	35 KV, min.	11,605 043
Fire Point	None to boiling point	10,123 14-28-54
Viscosity @54.4°C (SUS)	73 - 80	10,086 14-4-52
Corrosion Test (6 hrs. @210°C with bright aluminum foil)		10,126 14-55-57
Change in wt. of Al (%)	0.0	

COMPANY CONFIDENTIAL

(over)

TRAN 007021

IN 84 (REV. 12/59)

HARTOLDMON0043043

A. C. Color, APHA	60, max.	10,084 14-44-54
A. C. Condition	Clear	10,084 G-1
A. C. Acidity (mg. KOH/g.)	0.010, max.	10,087 14-42-54
A. C. Inorganic (Free) Chlorides	0.05 ppm., max.	10,118 010

GENERAL INFORMATION

Specific Heat @25°C	0.27
Fixed Chlorine	47.5 - 48.5%

COMPANY CONFIDENTIAL

TRAN 007022

HARTOLDMON0043044

MONSANTO CHEMICAL COMPANY
ORGANIC CHEMICALS DIVISION

Krummrich and Anniston
FINISHED PRODUCT
SPECIFICATION

PRODUCT CODE	DEPT. OR JOB
81103 - 82613	WGK-246-Ann.27

USE: Sales

SALES CODE: 1040-280-04/11/16-03/09

Issued 7/15/64
W. G. Krummrich Plant
By M D Seals

PRODUCT (Trade Name): Aroclor 1254 — TYPE: Non-Electrical Grade

PRODUCT (Chemical Name) — TYPE:

CHEMICAL FORMULA

Mixture

MOL WT.

SUPERSEDES SPECS OF: 5-4-61

SAMPLE FOR ANALYSIS: 3 x 16 oz. W. M. Bottles

UNRESTRICTED INFORMATION

Routine Tests	Specification	WGK Method	Anniston No.
Color, APHA	100, max.	10084	046
Sp. Gr. @65/15.5°C	1.495 - 1.505	10114	052
Acidity (mg. KOH/g.)	0.010, max.	10087	050
Moisture (H_2O) (ppm.)	50, max.	10620	047
General Tests			
Flash Point	None	10123	14-28-5
Viscosity @210°F (SUS)	44-48	10086	049

COMPANY
CONFIDENTIAL

TRAN 007023

HARTOLDMON0043045

Monsanto
ORGANIC CHEMICALS DIVISION

ANNISTON AND KRUMMRICH
FINISHED PRODUCT
SPECIFICATION

PRODUCT		DEPT.
Aroclor 1260	Electrical Grade	Ann WGK -
PLANT: Anniston Krummrich	PRODUCT CODE: 82614 - Ann. 81105 - WGK	USE: Sales
DATE EFFECTIVE: 5/25/66	SALES CODE: 1040-290-04/11/16-03-09	

APPROVALS

PRODUCTION: P. E. Heisler	RESEARCH: W. D. Robinson
SALES: W. E. Ault	QUALITY CONTROL (Chief Chemist): O. E. Dolin W. J. Gresham

GENERAL DESCRIPTION

CHEMICAL FORMULA

MOL WT.

SUPERSEDES SPEC. OF	SAMPLE FOR ANALYSIS	ISSUED BY
2/7/62	3 x 5 pt. Amber Bottles	J. P. Prader

UNRESTRICTED INFORMATION

	CHARACTERISTIC	LIMITS	METHOD WGK.	METHOD Annistor
(R)	Color (APHA)	150, max.	10084	14-44-5
(R)	Condition	Clear	10084	-------
(R)	Specific Gravity @ 90.15.5°C.	1.555 - 1.566	10114	14-49-5
(R)	Acidity (mg KOH/g.)	0.014, max.	10087	14-42-5
(R)	Moisture (H_2O) (ppm)	35, max.	10620	14-53-5
(R)	Viscosity @ 210°F. (SUS)	72 - 78	10086	14- 4-5
(R)	Refractive Index @ 25°C.	1.6455 - 1.6470	10125	14-34-5
(R)	Inorganic (Free) Chlorides	0.05 ppm, max.	10118	14-48-5
(R)	Pour Point (°C)	25 - 34	10115	14-47-5
(R)	Distillation Range (ASTM D-20, Corrected)		10117	14-31-5
	10% Distilled by wt.	385 - 398°C.		
	50% Distilled by wt.	390 - 404°C.		
	90% Distilled by wt.	400 - 420°C.		
(R)	Corrosion Test (6 hrs. @ 210°C. with bright aluminum foil)		10126	14-55-5
(R)	Change in weight of Al (@)	0.0		
(R)	A.C. Color (APHA)	150, max.	10084	14-44-54
(R)	A.C. Condition	Clear	10084	--------
(R)	A.C. Acidity (mg. KOH/g.)	0.014, max.	10087	14-42-54
(R)	A.C. Inorganic (Free) Chlorides	0.05 ppm, max.	10118	14-48-57

(Over)

COMPANY CONFIDENTIAL

TRAN 007024

(R) Routine Analysis. All others Analyzed by request Only

HARTOLDMON0043046

UNRESTRICTED INFORMATION (Cont'd.)

	Characteristic	Limits	Method	
			WGK	Anniston
	Flash Point	None	10123	14-28-54
	Fire Point	None	10123	14-28-54
	Fixed Chlorine (%)	59.5 - 60.5	10088	14-13-54
(R)	Dielectric Strength @ 50°C.	30 K.V., min.	11605	---------
(R)	Resistivity (500 VDC @ 100°C. 0.1" gap as ohm-cm x 10^9)	500, min.	11607	14-35-57
(R)	Dielectric Constant 1000 cycles, 100°C.	3.6 - 3.8	11607	14-36-45

RESTRICTED INFORMATION

(R)	Monsanto Stability Test (As Chlorides in ppm.)	0.7, max.	11503	14-61-57

GENERAL INFORMATION

(R)	Evaporation Loss after 6 hrs. @ 100°C. (%)	0.2, max.	10116	12-32-54
(R)	Stability test - after 30 days at 100°C. in glass sealed in air.	No liberation of chlorine or chlorides	------	--------

COMPANY CONFIDENTIAL

TRAN 007025

HARTOLDMON0043047

Monsanto
ORGANIC CHEMICALS DIVISION

ANNISTON AND KRUMMRICH
FINISHED PRODUCT
SPECIFICATION

PRODUCT: AROCLOR DISTILLED 1262			DEPT. Ann-2 WGK-24
PLANT: ANN. & WGK	PRODUCT CODE: 82615-Ann. 81107-WGK	USE: Sales	
DATE EFFECTIVE: MAR 02 1966	SALES CODE: 1040-300-04/11/16-03-09		

APPROVALS

PRODUCTION: P. E. Heisler	RESEARCH: W. D. Robinson
SALES: W. E. Ault	QUALITY CONTROL (Chief Chemist): W. J. Gresham — O. E. Dolin

GENERAL DESCRIPTION

CHEMICAL FORMULA

MOL WT.

SUPERSEDES SPECS. OF	SAMPLE FOR ANALYSIS	ISSUED BY
1/24/62	2 x 16 oz. W.M. Bottles	J. P. Prader

CHARACTERISTIC		LIMITS	METHOD
UNRESTRICTED INFORMATION			
(R)	Appearance	Viscous liquid	10084
(R)	Color	APHA 150, max.	10084
(R)	Specific Gravity @ 90/15.5°C.	1.572 - 1.583	10114
(R)	Acid No. (mg. KOH/g.)	0.014, max.	10087
(R)	Viscosity @ 210°F.	86 - 100 SUS	10086
GENERAL INFORMATION			
	Pour Point (ASTM)	35 - 38°C.	
	Distilling Range	390 - 425°C.	
	Total Chlorine	61.5 - 62.5%	
	Specific Gravity Temperature Coefficient (85 - 130°C.)	0.001/°C.	

COMPANY CONFIDENTIAL

TRAN 007026

(R) Routine Analysis, All others Analyzed by request Only

HARTOLDMON0043048

MONSANTO CHEMICAL COMPANY
ORGANIC CHEMICALS DIVISION
Krummrich and Anniston
FINISHED PRODUCT SPECIFICATION

PRODUCT CODE: 82868
DEPT. OR JOB: WGK 246 Ann. 27
USE: Sales
SALES CODE: *See Below

Issued JUL 15 1964
W. G. Krummrich Plant
By M D Sale

PRODUCT (Trade Name) TYPE
Montars 1 and 2
PRODUCT (Chemical Name) TYPE
Polychlorinated Polyphenyls
CHEMICAL FORMULA

Mixture

MOL WT.

SUPERSEDES SPECS OF: 6-15-61
SAMPLE FOR ANALYSIS: 2 x 16 oz. W. M. Bottles

UNRESTRICTED INFORMATION

Routine Tests	Specification	Anniston Method No.	WGK
Appearance	Black Solid	14-17-52	11321

General Information

Physical Properties (Typical Values)	Montar 1	Montar 2
Softening Point (ASTM E-28-51T)	54-160°C	70-170°C
Acidity	Slightly Basic	Slightly Basi
Chlorine Content	36-42%	44-48%
CaO	5-15%	5-15%
Fe	0.5-1.0%	0.5-1.0%
Benzene Insoluble	- - - -	12.5%
Flash Point	500-620°F	- - - -

RESTRICTED INFORMATION

Montars 1 and 2 are the still residues from distillation of Aroclors 1242 and 1248 respectively. Composition of these Montars is not controlled, being entirely dependent on conditions required to make acceptable distilled product.

COMPANY CONFIDENTIAL

Sales Code Nos.

Montar 1 6405 - 001 - 04 - 03/09
Montar 2 6405 - 002 - 04 - 03/09

TRAN 007027

HARTOLDMON0043049

MONSANTO CHEMICAL COMPANY
ORGANIC CHEMICALS DIVISION
Krummrich and Anniston
FINISHED PRODUCT SPECIFICATION

PRODUCT CODE	DEPT. OR JOB
82868	WGK 246 Ann.27

USE: Sales

SALES CODE: *See Below

Issued JUL 15 1964
W. G. Krummrich Plant
By M D Daly

PRODUCT (Trade Name) TYPE: Montars 3 and 4

PRODUCT (Chemical Name) TYPE: Polychlorinated Polyphenyls

CHEMICAL FORMULA: Mixture

MOL WT.

SUPERSEDES SPECS OF	SAMPLE FOR ANALYSIS
6-15-61	2 x 16 oz. W. M. Bottles

UNRESTRICTED INFORMATION

Routine Tests	Specification	Anniston Method No.	WGI
Appearance	Black Solid	14-17-52	113

General Information

Physical Properties (Typical Values)	Montar 3	Montar 4
Softening Point (Method ASTM E28-51T)	86-168°C	92-206°C
Acidity	Slightly Basic	Slightly Bas
Chlorine Content	50-52%	54-56%
CaO	5-10%	5-10%
Fe	0.3-0.6%	0.5-1.0%

RESTRICTED INFORMATION

Montars 3 and 4 are the still residues from distillation of Aroclors 1254 and 1260 respectively. Composition of these Montars is not controlled, being entirely dependent on conditions required to make acceptable distilled product.

*Sales Code Nos.

Montar 3 6405 - 003 - 04 - 03/09
Montar 4 6405 - 004 - 04 - 03/09

COMPANY CONFIDENTIAL

TRAN 007028

HARTOLDMON0043050

Dept. 246 - Process Description

AROCLOR

APPENDIX C

PHYSICAL AND CHEMICAL DATA

Physical Constant Data sheets which are available are listed following this page.

COMPANY
CONFIDENTIAL

HARTOLDMON0043051

PHYSICAL CONSTANTS DATA

SUBSTANCE

82601 DIPHENYL

STRUCTURAL FORMULA

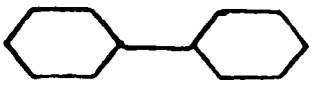

Beilstein V - 576

COMPILED BY W. P. Metzner 2/12/43 Rev. DATE

6/22/43, 1/11/44 Rev. A. M. Ellenburg 6/26/57

NAME			SOURCE & DATE
Formula		$C_6H_5.C_6H_5$	
Molecular Weight		154.20	Chem. Rubber Handbook
Appearance		Monoclinic	" " 1941-42
Boiling Point at 760 mm		255°C.	Int. Crit. Tables 1928
Boiling Point at 10 mm		118	*Swann file #137 1935
Boiling Point at mm			
Boiling Point at mm			
Crystallizing Point		68.0°C	*Swann Curves 1934
Melting Point		68°C.	Int. Crit Tables 1928
Solution Point			
Specific Gravity @	77/4°C	0.9896	Int. Crit. Tables 1928
Specific Gravity @	20/4°C	1.041	" " " "
Pounds per Gal. @	77 °C	8.23 lbs. per gal.	Swann File #137A 1930
Coefficient of Expansion			
Refractive Index @	77.1°C n δ	D = 1.58822	Int. Crit. Tables 1928
Infra Red Spectrum (Reference)			
Ultra Violet Spectrum (Reference)			
Viscosity @	100°C	28.8 Say. Sec.	*Swann File #137A 1930
Viscosity @	70°C	31.2 " "	" " " "
Surface Tension	128.2°C	29.5 dyne/cm	Int. Crit. Tables 1928
Solubility in Water @	80°C	Insoluble	Dow 1943
Solubility in abs. Alc.	19.5°C	9.98 g./100 g. solvent	Seidell 1941
Solubility in 100% Methanol	18.5°C	6.57 g./100 g. solvent	" 1941
Benzene @	27.8°C.	137 g./100 g. solvent	" 1941
Heptane @	26.5°C.	25.1 g./100 g. solvent	" 1941
Flash Point °F (Method)		235°F - closed cup	Ind. & Eng. Chem. 1940
Fire Point °C	(open cup)	270°F	32, 882
Heat of Combustion	Kg-cal (15)	per gm. mol = 1504.4	Swann File #137 A (1943)
Heat of Formation			Int. Crit. Tables 1928
Thermal Stability (cal./kg/min.)			
Latent Heat of Fusion			
Latent Heat of Vap.	@ 255°C	136.5 BTU/lb.	Swann File #137 A (1928)
Specific Heat		0.43 BTU/lb. °F.	R&E CR 964 (1956)
Critical Temperature		528°C	Rev. Sci. Instruments 563
Critical Pressure		41.4 Atm. absolute	" " " (1930
Dissociation Constant			
Latent Heat of Fusion		28.8 gm-cal. per. gm. (53.1 BTU/lb)	Lange Handbook 1937

Other Constants

COMPANY CONFIDENTIAL

TRAN 007030

*NOTE:- Files of W. P. Metzner, St. Louis

Toxicity (Give Reference) (1) Dr. McLester, Anniston Plant. Report copy in St. Louis physicians file

Perry Mav- "Chemistry of Synthetic Drugs" 3ed p. 1 1937

HARTOLDMON0043052

PHYSICAL CONSTANTS DATA

SUBSTANCE: FERRIC CHLORIDE, ANHYDROUS

STRUCTURAL FORMULA:

Penn-Salt Chem. Co.

COMPILED BY Penn-Salt Chem. Co. DATE 10-57

NAME		SOURCE & DATE
Formula	$FeCl_3$	Ref.1
Molecular Weight	166.22	Ref.1
Appearance	Black iridescent crystals	Ref.1
Boiling Point at 760 mm		
Boiling Point at mm		
Boiling Point at mm		
Boiling Point at mm		
Crystallizing Point		
Melting Point	Sublimes	
Solution Point		
Specific Gravity @		
Specific Gravity @		
Pounds per Gal. @ °C		
Coefficient of Expansion		
Refractive Index @ n D		
Infra Red Spectrum (Reference)		
Ultra Violet Spectrum (Reference)		
Viscosity @		
Viscosity @		
Surface Tension		
Solubility in Water	V. Sol. (heat rise)	Ref.1
Solubility in		
Solubility in		
Flash Point °F (Method)		
Fire Point °C		
Heat of Combustion		
Heat of Formation		
Thermal Stability (cal./kg./min.)		
Latent Heat of Fusion		
Latent Heat of Vap.		
Specific Heat		
Critical Temperature		
Critical Pressure		
Dissociation Constant		
Decomposes on exposure to moist air.		

COMPANY CONFIDENTIAL

Other Constants

Reference 1. Penn-Salt Chem. Co. Tech. Data Sheet & Specs.

TRAN 007031

Toxicity (Give Reference)

NOTE: These data should not be released outside of Monsanto Chemical Company. Use additional sheets if necessary.

HARTOLDMON0043053

IN 819

38800

PHYSICAL CONSTANTS DATA

SUBSTANCE: HYDRATED LIME (Calcium Hydroxide)

STRUCTURAL FORMULA:

COMPILED BY: Mississippi Lime Company
Leo J. Hoog, M. L. C.
A. M. Ellenburg Revised

DATE: 1-25-57
7-12-57

NAME		SOURCE & DATE
Formula	$Ca(OH)_2$	Ref. 1
Molecular Weight	74.10	Ref. 1
Appearance	White powder	Ref. 2
Boiling Point at 760 mm		
Boiling Point at mm		
Boiling Point at mm		
Boiling Point at mm		
Crystallizing Point		
Melting Point	Decomposes	Ref. 1
Solution Point		
Specific Gravity @ 20°C	2.2	Ref. 1
Specific Gravity @		
Pounds per Gal. @ 20 °C	4	Ref. 2
Coefficient of Expansion		
Refractive Index @ n_D^t	wD 1.574, Ed 1.545	Ref. 1
Infra Red Spectrum (Reference)		
Ultra Violet Spectrum (Reference)		
Viscosity @		
Viscosity @		
Surface Tension		
Solubility in Water	.185% @0°C, .077% @ 100°C	Ref. 1
Solubility in	Soluble in acids and NH_4Cl	Ref. 1
Solubility in		
Flash Point °F (Method)		
Fire Point °C		
Heat of Combustion		
Heat of Formation		
Thermal Stability (cal./kg/min.)		
Latent Heat of Fusion		
Latent Heat of Vap.		
Specific Heat		
Critical Temperature		
Critical Pressure		
Dissociation Constant		

Other Constants

References:
1. Langes Handbook, Ed., p. 1856
2. Information by Vendor

Toxicity (Give Reference)

COMPANY CONFIDENTIAL

TRAN 007032

HARTOLDMON0043054

PHYSICAL CONSTANTS DATA

SUBSTANCE	STRUCTURAL FORMULA
CHLORINE	

COMPILED BY	DATE
W. H. Demaree	7-29-56

NAME		SOURCE & DATE
Formula		
Molecular Weight	70.914	
Appearance		
Boiling Point at 760 mm	-34.05	API
Boiling Point at 100 mm	-71.32	Ref. 1
Boiling Point at 10 mm	-100.06	Ref. 1
Boiling Point at 1 mm	-120.44	Ref. 1
Crystallizing Point		
Melting Point	-100.98	Ref. 2
Solution Point		
Specific Gravity @ 0°C (gas)	2.49	Ref. 2
Specific Gravity @ 20°C	1.408	Lange
Pounds per Gal. @ °C		
Coefficient of Expansion		
Refractive Index @ 0°C n D	1.47	Ref. 2
Infra Red Spectrum (Reference)		
Ultra Violet Spectrum (Reference)		
Viscosity @		
Viscosity @		
Surface Tension		
Solubility in Water		
Solubility in		
Solubility in —		
Specific gravity @ 30°C	1.377	Lange
Flash Point °F (Method)		
Fire Point °C		
Heat of Combustion		
Heat of Formation		
Thermal Stability (cal./gr./min.)		
Latent Heat of Fusion		
Latent Heat of Vap.		
Specific Heat		
Critical Temperature	144°C	Ref. 2
Critical Pressure	76.1 atmos.	Ref. 2
Dissociation Constant		

Other Constants

Ref. 1 - Calc. from det. data
Ref. 2 - Monsanto Chlorine

Toxicity (Give Reference)

COMPANY CONFIDENTIAL

TRAN 007033

NOTE - These data should not be released outside of Monsanto Chemical Company. Use additional sheets if

HARTOLDMON0043055

PHYSICAL CONSTANTS DATA

SUBSTANCE: AROCLOR 1242

STRUCTURAL FORMULA: 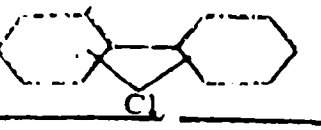

COMPILED BY: A. M. Elenburg

DATE: 4-25-57

NAME		SOURCE & DATE
Formula	$C_{12}H_7Cl_3$	
Molecular Weight	257 (avg.)	
Appearance	Colorless Mobile O.	Mon. Bull. OP-1.5, p. 956;
Boiling Point at 760 mm Range	325 - 360 C.	"
Boiling Point at 3 mm "	155-195 C.	
Boiling Point at mm		
Boiling Point at mm		
Crystallizing Point	Non-crystallizing	
Melting Point		
Solution Point		
Specific Gravity @ 25/25 C.	1.380	"
Specific Gravity @ 25/15.5 C.	1.381 - 1.392	Specification 2-14-55
Pounds per Gal. @ 25 °C	11.50	M. B. OP-1.5
Coefficient of Expansion 25-65 °C.	0.00068 cc/cc/°C.	"
Refractive Index @ 25 C, n_D	1.6245 - 1.6265	Specification 2-14-55
Infra Red Spectrum *(Reference)*		
Ultra Violet Spectrum *(Reference)*		
Viscosity @ 210 °F.	34-35 SUS	M. B. OP-1.5
Viscosity @ 100 °F.	82-92 SUS	"
Surface Tension Dynes/cm @ 20 °C.	45.3	J. Coll. Sci. 7, 164, 1952
Solubility in Water	Insoluble	M. B. OP-1.5
Solubility in 3A Alcohol @ 29 °C.	23.3 g./100 cc	"
Solubility in Pyridine @ 30 °C.	132.5 g./100 cc	"
Flash Point °C (Method) C.O.C.	180 C.	"
Fire Point °C C.O.C.	None	"
Heat of Combustion		
Heat of Formation		
Thermal Stability (cal./kg./min.)		
Latent Heat of Fusion		
Latent Heat of Vap. cal/gm.	61	Calculated
Specific Heat @ 25 C.	0.293	M. B. OP-1.5
Critical Temperature		
Critical Pressure		
Dissociation Constant		
Specific Heat @ 300 °C.	0.380	"
Other Constants: Pour Point	-14 °C. or lower	"
Other Constants: Thermal Conductivity, cal/cm/°C/sec.	24.0 @ 28 C.	To be published
Other Constants: Electric Constant, 100 °C. 60 cy.	4.7 - 4.9	M. B. OP-1.5
Toxicity *(Give Reference)*	Contact Medical Dept.	M. B. OP-1.5

COMPANY CONFIDENTIAL

TRAN 007034

HARTOLDMON0043056

PHYSICAL CONSTANTS DATA

SUBSTANCE	STRUCTURAL FORMULA
AROCLOR 1248	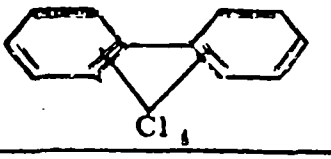
COMPILED BY: A. M. Ellenburg	DATE: 4-25-57

NAME		SOURCE & DATE
Formula	$C_{12}H_6Cl_4$	
Molecular Weight	292 (Avg.)	
Appearance	Yellow Tinted Mob. Oil	Monsanto Bull. OP-115(19
Boiling Point at 760 mm Range	345-385°C.	"
Boiling Point at 3 mm "	165-210°C.	"
Boiling Point at mm		
Boiling Point at mm		
Crystallizing Point	Non-crystallizing	"
Melting Point		
Solution Point		
Specific Gravity @ 25/25°C.	1.445	"
Specific Gravity @ 65/15.5°C.	1.405-1.415	Specifications 9/9/54
Pounds per Gal. @ 25 °C	12.04	M.B. OP-115
Coefficient of Expansion 25-65°C.	0.00070 cc/cc/°C.	"
Refractive Index @ 25°C n D	1.6285-1.6305	Specification 9/9/54
Infra Red Spectrum *(Reference)*		
Ultra Violet Spectrum *(Reference)*		
Viscosity @ 130°F.	73-80 SUS	M.B. OP-115
Viscosity @		
Surface Tension Dynes/cm @20°C.	44.2	J. Coll. Sci. 7, 166, (1952)
Solubility in Water	Insoluble	M.B. OP-115
Solubility in 3A Alcohol @ 25°C.	15 g./100 cc	"
Solubility in Pyridine @ 29°C.	111.4g./100 cc	"
Flash Point °F (Method) c.o.c.	196°C.	"
Fire Point °C c.o.c.	None	"
Heat of Combustion		
Heat of Formation		
Thermal Stability (cal./kg./min.)		
Latent Heat of Fusion		
Latent Heat of Vap. cal/gm.	54	Calculated
Specific Heat @ 25°C.	0.277	M.B. OP-115
Critical Temperature		
Critical Pressure		
Dissociation Constant		
Specific Heat @ 300°C.	0.356	"
Other Constants: Pour Point	0°C. or lower	"
Thermal Conductivity, cal/cm/°C/sec.	23.6 @ 28°C.	To be published
Dielectric Constant, 100°C., 60 cy.	4.5-4.7	M.B. OP-115
Toxicity *(Give Reference)*	Contact Medical Dept.	M.B. OP-115

COMPANY CONFIDENTIAL

TRAN 007035

HARTOLDMON0043057

IN 010

PHYSICAL CONSTANTS DATA

SUBSTANCE: AROCLOR 1254

STRUCTURAL FORMULA: 

COMPILED BY: A. M. Elterberg

DATE: 4-25-47

NAME		SOURCE & DATE
Formula	$C_{12}H_5Cl_5$	
Molecular Weight	326 (Avg.)	
Appearance	Pale Yellow Viscous oil	Monsanto Bul. OP-115 (1956
Boiling Point at 760 mm Range	365-400°C	"
Boiling Point at 3 mm "	180-220°C	"
Boiling Point at mm		
Boiling Point at mm		
Crystallizing Point	Non-crystalizing	"
Melting Point		
Solution Point		
Specific Gravity @ 25/25°C.	1.538	"
Specific Gravity @ 65/15.5°C.	1.495-1.505	Specifications 2/14/55
Pounds per Gal. @ 25 °C	12.82	MB OP-115
Coefficient of Expansion 25-65°C.	0.00068 cc/cc/°C.	"
Refractive Index @ 25°C n D	1.6370-1.6390	Specification 2/14/55
Infra Red Spectrum (Reference)		
Ultra Violet Spectrum (Reference)		
Viscosity @ 210° F	44-48 SUS	MB OP-115
Viscosity @		
Surface Tension Dynes/cm	50.3 @25°C. 42.0 @100°C	"
Solubility in Water	Insoluble	"
Solubility in 3A Alcohol @27°C	10 g./100 cc	"
Solubility in Pyridine @ 31°C.	114 g./100 cc	"
Flash Point °F (Method) c.o.c.	None	"
Fire Point °C c.o.c.	None	"
Heat of Combustion		
Heat of Formation		
Thermal Stability (cal./gr/min.)		
Latent Heat of Fusion		
Latent Heat of Vap. cal/gm.	50	Calculated
Specific Heat @ 25°C.	0.261	MB OP-115
Critical Temperature		
Critical Pressure		
Dissociation Constant		
Specific Heat @ 300°C.	0.336	"
Other Constants: Pour Point	-12°C.	"
Other Constants: Thermal Conductivity, Cal/cm/°C/Sec.	22.9 @ 28°C	To be published
Other Constants: Dielectric Constant, 100°C, 60 cy.	4.15-4.35	MB-OP-115
		TRAN 007036
Toxicity (Give Reference)	Contact Medical Dept.	MB-OP-115

COMPANY CONFIDENTIAL

HARTOLDMON0043058

PHYSICAL CONSTANTS DATA

SUBSTANCE: AROCLOR 1260

STRUCTURAL FORMULA

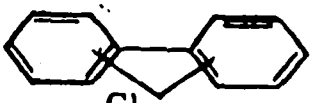

COMPILED BY: A. M. Ellenburg

DATE: 4/25/57

NAME			SOURCE & DATE
Formula		$C_{12}H_{3.75}Cl_{6.25}$	
Molecular Weight		361 (Avg.)	
Appearance		Lt. Yell. soft sticky resin	Monsanto Bull. OP-115(195
Boiling Point at 760 mm	Range	385-420°C.	"
Boiling Point at ___ mm	"	195-245°C.	"
Boiling Point at ___ mm			
Boiling Point at ___ mm			
Crystallizing Point		Non-Crystallizing	"
Melting Point			
Solution Point			
Specific Gravity @	25/25°C.	1.620	"
Specific Gravity @	80/15.5°C.	1.555-1.588	Specification 2/14/55
Pounds per Gal. @	25°C	13.50	MB OP-115
Coefficient of Expansion	20-100°C.	0.00067 cc/cc/°C.	
Refractive Index @	25°C n_D	1.6455-1.6465	Specification 2/14/55
Infra Red Spectrum (Reference)			
Ultra Violet Spectrum (Reference)			
Viscosity @	210°F.	72-78 SUS	MB OP-115
Viscosity @			
Surface Tension			
Solubility in Water		Insoluble	" "
Solubility in			
Solubility in			
Flash Point °F (Method)	c.o.c.	None	"
Fire Point °C	c.o.c.	None	"
Heat of Combustion			
Heat of Formation			
Thermal Stability (cal./kg/min.)			
Latent Heat of Fusion			
Latent Heat of Vap.	cal/gm	48	Calculated'
Specific Heat	@ 25°C.	0.228	MB OP-115
Critical Temperature			
Critical Pressure			
Dissociation Constant			
Specific Heat @ 300°C.		0.303	"
Other Constants: Pour Point		25-34°C.	"
Dielectric Constant, 100°C. 60 cy.		3.6-3.8	"
			TRAN 007037
Toxicity (Give Reference)		Contact Medical Dept.	MB OP-115

COMPANY CONFIDENTIAL

HARTOLDMON0043059

PHYSICAL CONSTANTS DATA

SUBSTANCE: AROCLOR 1262

STRUCTURAL FORMULA: 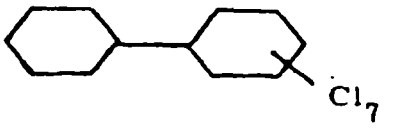

COMPILED BY: A. M. Ellenburg

DATE: 7/3/57

NAME		SOURCE & DATE
Formula	$C_{12}H_3Cl_7$	
Molecular Weight	395	
Appearance	Light yell. sticky Resin	Monsanto Bulletin OP-115
Boiling Point at 760 mm	390-425°C	" (1956
Boiling Point at mm		
Boiling Point at mm		
Boiling Point at mm		
Crystallizing Point		
Melting Point		
Solution Point		
Specific Gravity @ 90/15.5°C	1.577-1.587	Specs. 4/11/55
Specific Gravity @ 25/25°C	1.646	MB OP-115
Pounds per Gal. @ 25 °C	13.72	"
Coefficient of Expansion 25-65°C	0.00064 cc/cc/°C	"
Refractive Index @ 25°C n_D^{β}	1.648-1.650	"
Infra Red Spectrum (Reference)		
Ultra Violet Spectrum (Reference)		
Viscosity @ 210°F	86-100 SUS	Specs. 4/11/55
Viscosity @		
Surface Tension		
Solubility in Water		
Solubility in		
Solubility in		
Flash Point °F (Method)	None	MB OP-115
Fire Point °C	None	"
Heat of Combustion		
Heat of Formation		
Thermal Stability (cal./gr./min.)		
Latent Heat of Fusion		
Latent Heat of Vap.		
Specific Heat		
Critical Temperature		
Critical Pressure		
Dissociation Constant		
Pour Point	35-38°C	
Other Constants		
		TRAN 007038
Toxicity (Give Reference)	Contact Med. Dept.	MB OP-115

COMPANY CONFIDENTIAL

NOTE: *These data should not be released outside of Monsanto Chemical Company. Use additional sheets if necessary.*

HARTOLDMON0043060

Dept. 246 - Process Description

AROCLOR

APPENDIX D

UTILITIES

The utility calculations are based on design calculations for a 28.8 million pounds per year production rate.

The breakdown of utility usage by individual equipment is only on estimate. The estimates of utility usage are average values in most instances as it is difficult to measure the operating time and load for a particular piece of equipment with great accuracy.

The total usage of each utility was taken from the cost sheets. Estimates of individual operating time and percentage of the total load were made to calculate the distribution of utilities as given in the following pages of this section.

COMPANY CONFIDENTIAL

TRAN 007039

HARTOLDMON0043061

Dept. 246 - Process Description

AROCLOR

APPENDIX D UTILITIES (Cont'd.)

1. Power Consumption

A. Electricity - 440 V., 3 phase, 60 cycle

Item No.	Equipment Motor	Motor HP	Peak Load KW	Monthly Usage KWH
101	Biphenyl transfer pump	3.00	2.6	80
103	Biphenyl head tank pump	.75	0.7	240
104	Biphenyl feed pump	7.50	6.6	1980
121	#5 Chlorinator pump	10.00	8.8	3040
122	#4 Chlorinator pump	10.00	8.8	3040
123	#3 Chlorinator pump	10.00	8.8	3040
124	#2 Chlorinator pump	10.00	8.8	3040
125	#1 Chlorinator pump	10.00	8.8	3040
127	#2 Blow tank pump	5.00	4.4	200
129	#1 Blow tank pump	5.00	4.4	1580
132	#1 still pump	5.00	4.4	1580
135	#2 still pump	7.50	6.6	2340
140	#1 Receiver pump	2.00	1.7	20
141	#2 Receiver pump	2.00	1.7	20
144	Blend tank pump	3.00	2.6	200
149	#3 Storage transfer pump	3.00	2.6	160
151	#4 storage transfer pump	3.00	2.6	240
153	#5 storage transfer pump	3.00	2.6	200
155	#8 storage transfer pump	3.00	2.6	80
157	#7 storage transfer pump	3.00	2.6	80
170	#1 city water pump	7.50	6.6	2340
171	#2 city water pump	7.50	6.6	0
180	Exhaust blower	15.00	13.0	0
	Miscellaneous Totals	135.75	119.8	26,860

COMPANY CONFIDENTIAL

TRAN 007040

HARTOLDMON0043062

Dept. 246 - Process Description

AROCLOR

APPENDIX D UTILITIES (Cont'd.)

1. Power Consumption (Cont'd.)

B. Electricity - 110 V., nne phase, 60 cycle

Equipment	Peak Load KW	Monthly Usage KWH
Lighting	15	3600
Instrumentation	2	1440
Miscellaneous	3	2150
Totals	20	7190

2. Natural Gas

Item No.	Using Equipment	Normal Use SCFH	Peak Use SCFH	Monthly Usage MSCF
131	#1 Furnace	1200	2400	430
132	#2 Furnace	1200	2400	430
	Totals	2400	4800	860

3. Compressed (plant) Air

Item No.	Using Equipment	Normal Use SCFM	Peak Use SCFM	Monthly Usage MSCF
127	#2 Blow Tank	60	200	2590
148	#3 Storage Tank	60	200	90
150	#4 Storage Tank	60	200	90
152	#5 Storage Tank	60	200	90
154	#8 Storage Tank	60	200	90
156	#7 Storage Tank	60	200	90
	Miscellaneous	10	200	330
	Totals	370	1400	3460

COMPANY CONFIDENTIAL

HARTOLDMON0043063

Dept. 246 - Process Description

AROCLOR

APPENDIX D

UTILITIES (Cont'd.)

4. Nitrogen

Item No.	Using Equipment	Normal Use SCFH	Peak Use SCFH	Monthly Usage SCF
142	#1 Blend Tank	3	4	2140
143	#2 Blend Tank	3	4	2140
146	#1 Product Tank	3	4	2140
147	#2 Product Tank	3	4	2140
148	#3 Storage Tank	3	4	2140
150	#4 Storage Tank	3	4	2140
152	#5 Storage Tank	3	4	2140
	Totals	21	28	14,980

5. Purchased Water

Item No.	Using Equipment	Normal Use GPM	Peak Use GPM	Monthly Usage M. Gal.
130	#1 Still	3	5	150
131	#2 Still	3	5	150
203	#1 Vacuum Jet	20	20	870
204	#2 Vacuum Jet	18	20	770
205	#3 Vacuum Jet	15	20	650
206	S-K Drowning Jet	25	30	120
	Miscellaneous	2	10	100
	Totals	86	110	2810

6. High Pressure Steam
200 PSIG at 388°F

Item No.	Using Equipment	Normal Use Lb./hr.	Peak Use Lb./hr.	Monthly Usage M. lb.
167	#1 Blow Tank	210	310	150
203	#1 Vacuum Jet	450	670	320
204	#2 Vacuum Jet	400	615	290
205	#3 Vacuum Jet	325	500	240
	Totals	1385	2095	1000

7. Low Pressure Steam
80 PSIG at 325°F

TRAN 007042

Item No.	Using Equipment	Normal Use Lb./hr.	Peak Use Lb./hr.	Monthly Usage M. Lb.
102	Biphenyl Storage Tank	700	900	500
138	#1 Receiver Tank	700	900	500
139	#2 Receiver Tank	700	900	500
142	#1 Blend Tank	200	300	150
143	#2 Blend Tank	200	300	150
146	#1 Finished Product Tank	200	300	150
	Totals	2700	3600	1950

COMPANY CONFIDENTIAL

HARTOLDMON0043064

Dept. 246 - Process Description

AROCLOR

APPENDIX D UTILITIES (Cont'd.)

7. Low Pressure Steam (Cont'd.)

Item No.	Using Equipment	Normal Use Lb./hr.	Peak Use Lb./hr.	Monthly Usage M. lbs.
147	#2 Finished Product Tank	200	300	150
148	#3 Storage Tank	700	900	500
150	#4 Storage Tank	700	900	500
152	#5 Storage Tank	700	900	500
154	#8 Storage Tank	700	900	500
156	#7 Storage Tank	700	900	500
	Miscellaneous	1400	2800	1000
	Totals	7800	10,500	5600

COMPANY CONFIDENTIAL

TRAN 007043

HARTOLDMON0043065

Dept. 246 - Process Description

AROCLOR

APPENDIX E PERSONNEL

Departments 246, A-246, B-246 and C-246 are closely related. Operating personnel may work in all of the departments in a given day. For this reason, the description of operating classifications and assignments for departments 246, A-246, B-246 and C-246 is given as though all four of the departments are just one department.

Operating Classifications

Job	Number of Men	
	7 day/week Schedule	10 & 4 Schedule
Premium Operator	4	3
Second Operator	4	3
Repairman	1	1
Standard Operator	2	2
Porter	½	½
Swingman	1	0
TOTAL	12½	9½

The swingman works two shifts per week (Saturday and Sunday) as a relief foreman, two shifts as a repairman, and one shift operating the premium job. There is an open shift on the second operator job that is covered by overtime. The premium operator and second operator cover three shifts each day. The repairman works the day shift, and with the swingman, there is 7 days per week repairman coverage. Standard operators work the day and middle shift 5 days per week. The porter works half time in department 246 and half time in department 243. The premium operator has lead responsibility for his shift.

The work force works all three departments Aroclor, Pyranol and Pydraul as one coordinated operation. The assignment of time is 70% to Aroclors, 15% to Pyranol and 15% to Pydraul.

TRAN 007044

Operating Assignments:

Premium Operator: Has overall responsibility and operates 5 chlorinators 2 stills and covers the necessary absences of the standard operator.

Second Operator: Operates 2 blend tanks filter, 2 finished product tanks, storage tanks, makes Pyranol and Pydraul mixes, loads trailer, and tank cars, charges chlorinators and transfers receivers and also belongs to the Fire Brigade.

Repairman: Unloads cars and trailers of Biphenyl, Trichlorobenzene and Tetra-Trichlorobenzene and finished product, makes weekly safety inspectic

COMPANY CONFIDENTIAL

HARTOLDMON0043066

Dept. 246 - Process Description

AROCLOR

APPENDIX E PERSONNEL (Cont'd)

Standard Operator: Fills, stencils and labels 5 gallon, 30 and 55 gallon drums and clean-up assignments when not drumming. The Standard Operator loads cars and trailers as does the second operator.

Porter: Cleans office, control room, repair room, wash room and smoking shelter.

Swingman: Works one day per week as premium operator, two days as repairman and two days as relief foreman. As relief foreman takes overall supervision on day shift on weekends including arranging for maintenance, night sheets and line-up of work.

COMPANY CONFIDENTIAL

HARTOLDMON0043067

AROCLOR

APPENDIX F PACKAGING & SHIPPING

Aroclor, Pyranol & Pydraul and filled about half in drums and half in tank cars or tank trucks.

A substantial amount (about 40%) of Aroclor is used to make Pyranol and Pydraul.

Sales are largely directly to the customer. The remainder is in bulk shipments to the J. F. Queeny Plant.

All electrical grade tank truck shipments are made in the customers trucks which are stainless steel. Non-electrical Aroclors are shipped in leased trucks and may be iron although other materials of construction are suitable. Pydraul is shipped in steel tank trucks.

Electrical grade Aroclor and Pyranols are shipped in solid aluminum lined tank cars or in lined tank cars either 4,000 or 8,000 gallons in capacity. The lining is either tin, zinc or aluminum spray because iron and iron oxide contamination is detrimental to the electrical properties. Electrical grade cars are either owned by Monsanto or on a long term lease. Non-electrical grade Aroclor is shipped in steel cars.

All electrical grade lots and bulk shipments of non-electrical material are sampled from the final container. That is all tank cars and tank trucks are sampled and analyzed after loading. All electrical grade drums are sampled from one of the drums.

Tank cars and tank trucks are inspected to be sure they are free of dirt and water or other foreign material before loading. Heels are drained before loading some materials. Car washing when necessary is done by the repair track. Tank cars are sealed with a numbered aluminum seal.

Lacquer lined drums are used for Aroclor and Pyranol and plain steel drums are used for Pydrauls.

A summary of products, weights and containers current use is as follows:

Product	Weights and Containers 5 Gal.	30 Gal.	55 Gal.	TT	TC
1232	-	-	600#	-	-
1242	55	-	600#	Yes	Yes
1248	60	-	600#	Yes	Yes
1254	60	-	600#	Yes	Yes
1254 Xylene	-	-	600#	-	-
1260	60	-	600#	Yes	Yes
1262	60	-	600#	-	-
MCS295	-	-	645#	-	-
Pyranol 1488	-	-	675#	-	-
Pyranol 1481	-	-	675#	-	-

COMPANY CONFIDENTIAL

TRAN 007046

HARTOLDMON0043068

Dept. 246 - Process Description

AROCLOR

APPENDIX F

PACKAGING & SHIPPING (Cont'd.)

Product	Weights and Containers 5 Gal.	30 Gal.	55 Gal.	TT	TC
Pyranol A-13B3B	65	360#	675#	-	4000 Gal.
Inerteen PPO	60	360#	674#	-	4000 Gal. & 8000 Gal.
Pydraul A-200	59	-	645#	Yes	-
Pydraul 280	60	-	625#	-	-

COMPANY CONFIDENTIAL

HARTOLDMON0043069

Dept. 246 - Process Description

AROCLOR

APPENDIX G

MATERIAL BALANCE

The material balance on Dept. 246 was made with a minimum of field measurements. Most of the estimates on the following page check fairly close with actual raw material usages that can be readily measured. The exact composition of some of the intermediate process streams is uncertain.

COMPANY
CONFIDENTIAL

HARTOLDMON0043070

Dept. 246 - Process Description

AROCLOR

APPENDIX G

SUMMARY OF MATERIAL BALANCE RESULTS

AROCLOR 1242

Raw Material & Cost ($/lb.)	Usages - Lbs/100 lbs product Theory	Material Balance	Material Balance Usages lbs/100 lbs
Biphenyl (.0662)	58	63	58 Finished Prod. 1 Filter Cake 3.5 Still Bottoms .5 Off-Gas HCl 63.0
Chlorine (.0217)	84	91.8	42 Finished Prod. 1.5 Filter Cake .05 Vacuum Jet 2.8 Still Bottoms .95 Air-HCl Mixture 44.50 Off-Gas HCl 91.80
*Ferric Chloride (.129)	0.03	.03	.03
*Attapulgus Earth (.0302)	15	.15	.15
*Air (.00055)	3	3	3.0
*Lime (.0100)	0.5	0.5	0.5

AROCLOR 1248

Biphenyl (.0662)	52	56.5	52 Finish Product 1 Filter Cake 3 Still Bottoms .5 Off-Gas HCl 56.5
Chlorine (.0217)	96	103.2	48 Finished Prod. 1.5 Filter Cake .05 Vacuum Jet 2.55 Still Bottoms .95 Air-HCl Mixture 50.15 Off-Gas HCl 103.20

COMPANY CONFIDENTIAL

TRAN 007049

*These raw materials are the same for production of all Aroclors.

HARTOLDMON0043071

Dept. 246 - Process Description

AROCLOR

APPENDIX G

SUMMARY OF MATERIAL BALANCE RESULTS (Cont'd.)

AROCLOR 1254

Raw Material & Cost ($/lb.)	Usages - Lbs/100 lbs product Theory	Material Balance	Material Balance Usages Lbs/100 Lbs
Biphenyl (.0662)	46	49.8	46 Finished Produc 0.5 Filter Cake 2.8 Still Bottoms 0.5 Off-Gas HCl 49.8
Chlorine (.0217)	108	117.5	54 Finished Produc 1 Filter Cake 0.05 Vacuum Jet 6.8 Still Bottoms 0.95 Air-HCl Mixture 54.7 Off-Gas HCl 117.50

AROCLOR 1260

Biphenyl (.0662)	40	43.4	40 Finished Produc 0.9 Filter Cake 2.0 Still Bottoms 0.5 Off-Gas HCl 43.4
Chlorine (.0217)	120	128.8	60 Finished Produc 0.5 Filter Cake 0.05 Vacuum Jet 4.8 Still Bottoms 0.95Air-HCl Mixture 62.50 Off-Gas HCl 128.80

COMPANY CONFIDENTIAL

TRAN 007050

HARTOLDMON0043072

Dept. 246 - Process Description

AROCLOR

APPENDIX H ATMOSPHERIC DISCHARGE - WASTE DISPOSAL

Discharge to Atmosphere	Lbs. per C lbs. of Aroclor Produced	Total Lbs/Yr based on Prod. Rate 28.6 M lbs/yr
1. HCl Fumes from blow tanks	0.01	2,000
2. HCl fumes from other tanks vented to atmosphere	0.01	2,000
3. Chlorine gas from chlorinator vented to blow tank	UNKNOWN	UNKNOWN
4. Aroclor & Biphenyl vapors of tanks vented to atmosphere	UNKNOWN	UNKNOWN
Discharge to Sewers		
1. HCl from chlorinators	2.5*	500,000*
2. Cl_2 from chlorinators	2.0*	30,000*
3. Condensibles in chlorinator off-gas	2.0*	30,000*
Discharge to Waste Disposal		
1. Montar	0.0176*	5,000*
2. Aroclor	0.33*	95,000*

COMPANY CONFIDENTIAL

*Estimated

TRAN 007051

HARTOLDMON0043073

Dept. 246 - Process Description

AROCLOR

APPENDIX I

PROCESS CONTROL

Sampling Point	Frequency	Reason for Sample	****Normal Range	Method Number
Chlorinators	2-3 times per batch	Specific Gravity	.011	
Blend Tanks	3 times each day	Color (APHA)	50-150 Max.	10,084
		Sp.Gr. at 25/15.5°C	.011	10,114
		Acidity (mg.KOH/g.)	.014 Max.	10,087
		*Moisture (H_2O) (PPM)	35 PPM Max.	10,620
		*Refractive Index at 25°C	.0020	10,125
		*Inorganic(free)Chlorides	.05 PPM Max.	T-2092
		*Dielectric Constant	.20	11,608
		*Resistivity (500 VDC @ 100°C 0.1" GAP as ohm-cm x 10^9	500, Min.	11,607
		*Hydrolysis Stability Test (as Chlorides)	1.0 PPM Max.	T-2087
		*Monsanto Stability Test (as Chlorides)	0.5 PPM Max.	11,503
		**Sulfates	None	12,169
		**Dielectric Strength at 25°C	35 KV Min.	11,605
		**Viscosity at 100°F (SUS)	10	10,086
		***Thermal Chemical Chlorides	0.75 PPM Max.	12,722
Storage Tank Composite	Every 1-2 days	Same as blend tanks		
Tank Cars & Trailers	Every Load	Same as blend tanks		

COMPANY CONFIDENTIAL

TRAN 007052

*Tests made on electrical grade Aroclors only.
**Tests made on request only.
***Special customer test.
****Maximum range for all Aroclors including electrical and non-electrical grades.

HARTOLDMON0043074

Dept. 246 - Process Description

AROCLOR

APPENDIX J SAFETY AND TOXICITY DATA

SAFETY EQUIPMENT

The following is a list of safety equipment (personal and departmental) required in department 246.

1. Fire extinguishers:

   A. Dry Chemical (3) - Southwest corner Bldg. CR - Main Floor
   - West wall at top of stairs of second floor.
   -

   B. Carbon Dioxide Snow - Southwest corner of Bldg. CR, ground level.

2. Chlorine Gas Masks(4) - Southwest corner, second floor
   - Control room, second floor
   - East side, outside control room
   - Wall, Southwest corner of sprinkler house, main floor.

3. Scott Air Masks - West of Lean-To

4. Safety Showers (2) - Southeast corner of Bldg. CR, ground level.
   - Southeast corner of Bldg. CR, 2nd floor.

5. Davis Vapotester

6. Eye Baths

7. Sprinkler System

Safety Precautions

The following are safety precautions followed in the operation of department 246.

1. Safety Equipment of Employee

   Each employee has the following safety equipment: (1) hard hat (2) safety glasses (3) goggles (4) rubber and canvas gloves (5) rubber overshoes. Special equipment may be issued as necessary for performing a particular job in a safe manner.

COMPANY CONFIDENTIAL

HARTOLDMON0043075

Dept. 246 - Process Description

AROCLOR

APPENDIX J SAFETY & TOXICITY DATA (Cont'd.)

2. Sampling of Crude Aroclor

The samples of Aroclor taken during the chlorination reaction are hot (170°C). Precaution must be taken to avoid skin contact of samples and inhalation of hydrogen chloride, chlorine and aroclor vapors.

3. Fires
Fires may result from the ignition of leaking gas, xylene, diphenyl, rags, paper, wood, etc. Automatic fire extinguishers and sprinklers have been installed to combat fires.

4. Explosions
Explosions may be caused from accumulated pockets of natural gas or a rapid burning of Diphenyl in a closed container such as a chlorinator. Chlorinators are equipped with a 10" diameter pressure relief line with a rupture disc madeto burst at 22 psi in case diphenyl within the chlorinator ignites.

5. Toxicity
Toxicity does not present a serious problem. However, a complete daily change of clean clothes is supplied to each person and time is allotted at the end of each shift to take a bath. Instructions are also issued to avoid actual skin contact with Biphenyl and Aroclor as much as possible and to wash hands and face before eating.

6. Miscellaneous
There are many accidents that can occur that may be classified as health and safety hazards. These accidents may result from such things as broken process lines, acid leaks, steam leaks, etc.

The worst inherent hazards are as follows:

1. Free chlorine from ruptured line or major leak.
2. HCl gas from ruptured line or major leak.
3. Dropping bottoms from stills.
4. Hot aroclor and diphenyl.

COMPANY CONFIDENTIAL

Safety Record

The last lost-time injury in Department 246 was January 28, 1948. The frequency of minor injuries is low, around one per month.

Toxicity: This material is a liquid under normal conditions and has a medium toxicity range for liquid ingestion and high toxicity for vapor inhalation. The maximum allowable concentration (M.A.C.) is 1 mg/cubic meter.

Fire Hazard: There is no fire hazard under normal conditions. Aroclor mixes (Xylene, Toluene, Butyl Acetate, etc.) may burn and explode at high temperatures when exposed to flames.

TRAN 007054

HARTOLDMON0043076

AROCLOR

APPENDIX J SAFETY & TOXICITY DATA (Cont'd.)

Other Hazards: This material can cause dermatitis, systemic poisoning from the fumes, and yellow atrophy of the liver. There are skin, mucous membranes and eye hazards encountered in handling this material.

Treatment and Antidotes: Call a physician and remove patient from fumes.

Storage and Handling: Protect the skin, lungs, and eyes by wearing approved protective clothing, respirator, and goggles. People who handle this material at elevated temperatures should have medical supervision, and the air should be sampled to insure compliance with M.A.C. There are no special storage restrictions under normal conditions except store in a ventilated area.

Shipping: There are no special shipping restrictions.

FERRIC CHLORIDE ($FeCl_3$)

Toxicity: This material is a solid under normal conditions and is non-toxic or has a rating as low.

Fire Hazard: There is no fire hazard under normal conditions, but it will emit toxic fumes at high temperatures.

Other Hazards: Some people are allergic to this material and may develop skin rash, and there is an eye hazard.

Treatment and Antidotes: Call a physician.

Storage and Handling: Protect the skin with approved protective clothing avoid the breathing of $FeCl_3$ dust, wear approved respirator with adequate cartridge, and protect the eyes with approved goggles. There are no storage regulations.

Shipping: There are no shipping restrictions.

COMPANY CONFIDENTIAL

DIPHENYL ($C_6H_5C_6H_5$)

Toxicity: This material is a solid at normal conditions and is medium toxic. The M.A.C. of vapor is a 2 mg/cubic meter of air. If ingested, the lethal dose is 2.4 g/Kg of body weight. The fumes are not dangerousl deadly, but they are poisonous over a prolonged time.

Fire Hazard: Diphenyl is very flammable and will burn when exposed to heat or flame or oxidizing materials (F.P. - 120°C).

Other Hazards: Diphenyl is not too corrosive to skin, but it will affect the eyes.

HARTOLDMON0043077

Dept. 246 - Process Description

AROCLOR

APPENDIX J SAFETY & TOXICITY DATA (Cont'd.)

DIPHENYL ($C_6H_5C_6H_5$) (Cont'd.)

Treatment and Antidotes: Wash eyes with water and get the patient to fresh air. Try to get patient to vomit, and call a physician.

Storage and Handling: This material can be stored in steel containers away from fire hazards and oxidizing agents. Wear suitable clothes and approved goggles when handling diphenyl.

Shipping: Ship in cars or other suitable containers with a red warning label of flammability.

XYLENE ($C_6H_4(CH_3)_2$

Toxicity: This material is a liquid under normal conditions and is very toxic in liquid or gaseous form, but it is less toxic than toluene. The M.A.C. is 200 ppm.

Fire Hazard: This material is very flammable and the limiting explosive concentration is 1-5.3% by volume in air. It will also react with oxidizing agents (F.P. -85°F).

Other Hazards: This material will cause necrosis if enough is inhaled, and is hazardous to eyes, mucous membranes, and the skin.

Treatment and Antidotes: Get patient to fresh air, and call a physician If injested, get patient to vomit. Wash eyes and skin with water.

Storage and Handling: This material should be stored in a cool well-ventilated area away from fire hazards or strong oxidizing agents. The material for storage can be steel cars or tanks. Wear approved protective clothing, respirator, and goggles.

Shipping: Ship in containers of steel or appropriate material with a red label.

COMPANY CONFIDENTIAL

TRICHLOROBENZENE:

Toxicity: This material is a solid at room temperature and the vapors are quite toxic. The solid is poison if ingested. The M.A.C. is 50 ppm

Fire Hazard: This solid is flammable but is listed only as a moderate fire hazard. Will burn at 420°C or above.

Other Hazards: This material will affect the liver, eyes, and mucous membranes.

Treatment and Antidotes: Wash eyes with water, and get patient to fresh air. Call a physician.

TRAN 007056

HARTOLDMON0043078

Dept. 246 - Process Description

AROCLOR

APPENDIX J SAFETY & TOXICITY DATA (Cont

TRICHLOROBENZENE (Cont'd.)

Storage and Handling: Store this material in cool, well-ventilated area away from hazards and oxidizing agents. Wear protective clothing, chemical safe goggles and approved respirator.

Shipping: Ship in steel containers like cars or tanks with red label.

TETRA-TRI-CHLOROBENZENE

Toxicity: This material is a solid at normal temperatures and is medium toxic. The M.A.C. of vapor is 50-75 ppm.

Fire Hazard: This material is not a very great fire hazard, but it will burn at high temperatures and will decompose and emit chlorine.

Other Hazards: This material will affect the eyes, skin, and mucous membranes.

Treatment and Handling: Wash eyes and skin with water and get patient to fresh air. Call a physician.

Storage and Handling: Store this material in a cool place away from fire hazards and strong oxidizing agents. This material can be stored in steel cars, tanks, or etc. Wear protective clothing, approved respirator, and chemical safe goggles when handling this material.

Shipping: Ship this material in containers marked with a red label.

LIME $Ca(OH)_2$

Toxicity: Lime is not dangerously toxic, and it is regarded as more of a nuisance. This material is a solid or slurry.

Fire Hazard: This material is not flammable.

Other Hazards: Lime is very hazardous to the eyes. It will burn the skin also, and the dust will affect the mucous membranes.

Treatment and Antidotes: Flood eyes and skin with large quantities of water. If lime is ingested, get patient to vomit and call physician.

Storage and Handling: Lime can be stored in steel containers, and people should wear protective clothing, respirators, and rubber or chemical safe goggles when handling lime.

Shipping: There are no special restrictions for shipping, but the containers should have a white label, a caustic warning.

COMPANY CONFIDENTIAL

TRAN 007057

HARTOLDMON0043079

Dept. 246 - Process Description

AROCLOR

APPENDIX J SAFETY AND TOXICITY DATA (Cont'd.)

ATTAPULGUS EARTH

Toxicity: This earth is not toxic in general.

Fire Hazard: There is no fire hazard.

Other Hazards: Attapulgus earth can create a dust hazard similar to other dusts that contain silica.

Treatment and Antidotes: Consult a physician.

Storage and Handling: Attapulgus earth presents no special storage problem and should be handling by persons wearing an approved respirator.

Shipping: There are no special restrictions on shipping.

HYDROGEN CHLORIDE (HCl)

Toxicity: This material is a gas under normal conditions and is very toxic. The M.A.C. is 5-10 ppm and a concentration of 1500-2000 ppm would be fatal to humans in a few minutes.

Fire Hazard: There is no fire hazard under normal conditions, but wet gas reacts with some metals to form hazardous hydrogen.

Other Hazards: This material is hazardous to teeth, skin, eyes, and mucous membranes.

Treatment and Antidotes: Wash profusely with water, if ingested, eat chalk, magnesium hydroxide, egg whites, and milk, and also administer oxygen. Call a physician.

Storage and Handling: This material should be stored in a cool, well ventilated area away from oxidizing agents. This material can be stored in rubber lined, glass, or tantalum vessels. People handling this material should wear suitable clothing like rubber aprons, shoes, and gloves. Also rubber goggles or chemical safe grades and approved pack or canister gas masks.

Shipping: Shipping containers must have a white warning label and a non-flammable label. Ship in appropriate containers such as rail car or carboy.

COMPANY CONFIDENTIAL

CHLORINE (Cl_2)

Toxicity: This material is a gas under normal conditions and is very toxic. The M.A.C. is .35 to 2 ppm. A concentration of 1000 ppm would be rapidly fatal. Least concentration with detectable odor is 3.5 ppm.

HARTOLDMON0043080

Dept. 246 - Process Description

AROCLOR

APPENDIX J SAFETY & TOXICITY DATA (Cont'd.)

CHLORINE (Cl_2) (Cont'd.)

Fire Hazard: There is no fire hazard under normal conditions, but there is an explosion hazard if chlorine is mixed with a strong reducing agent such as hydrogen or hydrocarbons on high temperature.

Other Hazards: This material causes eye, skin, and mucous membrane irritation.

Treatment and Antidotes: The patient should be given oxygen immediately and treated for shock. Call a physician.

Storage and Handling: This material should be stored in a ventilated and cool place away from fire hazards. When handling, wear a gas mask or approved respirator, clothing and rubber or chemical safe goggles. In strong chlorine concentrations, wear canister gas masks, Scott Air Pack, or oxygen breathing apparatus.

Shipping: The shipping containers must have a green gas label and a non-flammable label on. Ship in steel cars or cylinders.

COMPANY CONFIDENTIAL

TRAN 007059

HARTOLDMON0043081

Dept. 246 - Process Description

AROCLOR

APPENDIX K BACKGROUND INFORMATION

The manufacture of Aroclors was developed quite by chance. The Indian Refining Company, in the latter part of 1926, approached the Swann Chemical Company located in Anniston, Alabama, regarding the production of Biphenyl which the Indian Refining Company wanted to use as a heat transfer medium. The Swann Chemical Company agreed to produce Biphenyl, but first a process had to be developed.

Two years later, in 1928, a pilot plant for producing Biphenyl became operative. However, in the meantime, the Indian Refining Company dropped all interest in Biphenyl. Since a process had been developed for manufacturing Biphenyl, the Swann Chemical Company started looking for other outlets for this material. The simplest outlet was in the form of Chlorinated Biphenyls which were produced in the laboratory in 1929.

The Chlorinated Biphenyls produced exhibited good electrical properties. This was reported to the General Electric Company who immediately became interested in the product which ultimately developed into large scale consumption in electrical transformers and capacitors.

The trade name "Aroclors" was adopted for the Chlorinated Biphenyl products. The properties of Aroclors vary from mobile oily liquids to fine white crystals and hard transparent resins. The excellent electrical properties, fire resistance and inertness of the Aroclors make them useful for many applications.

Plant equipment was installed to produce Aroclors at a rate of 3000 pounds per day or 1 million pounds per year. In the following years, this production rate was insufficient to meet the increases sales requirements.

The Swann Chemical Company was purchased by the Monsanto Company in 1935. This purchase gave Monsanto access to the patent rights for the production of Aroclors.

Production capacity needed to be expanded, and since Monsanto had a chlorine plant as "Plant B" (now called the W. G. Krummrich Plant), the Aroclor production was transferred from the Anniston Plant to the Monsanto, Illinois Plant, where operations at an increased productive capacity started in September, 1936.

By 1940, the Krummrich Plant production capacity was inadequate, and in 1941, a similar production unit was installed in the Anniston Plant.

COMPANY CONFIDENTIAL

HARTOLDMON0043082

Dept. 246 - Process Description

AROCLOR

APPENDIX L TIME CYCLE

The design capacity of the department is 2,400,000 pounds per month or 28,800,000 pounds per year.

Figure 1 of this section illustrates the flow pattern of the Aroclor process and lists the approximate time needed to complete each process step. The time table for the Aroclor process is summarized below:

Operation		Time (hours)	Equivalent pounds of Finished Product
Charge Chlorinator		.25	
Chlorination	1242	6.00	6400
	1248	8.00	7200
	1254	10.00	8040
	1260	12.00	9100
Transfer to blow tanks		.25	
Aeration		2.00	
Distillation	1242	1.75	
	1248	1.75	
	1254	1.75	
	1260	1.75	
Blending		2.00	
Filtering		2.00	
Dropping to Storage		2.00	

The time required to make completed batches of the various Aroclors are tabulated below:

Aroclor	Batch Time (hrs.)
1242	17.25
1248	18.25
1254	20.25
1260	21.25

Process operations including filter press cleaning, sampling, etc., are independent of the batch completion time cycle because production time is not lost.

COMPANY
CONFIDENTIAL

TRAN 007061

HARTOLDMON0043083

Dept. 246 - Process Description

AROCLOR

APPENDIX M QUALITY CONSIDERATIONS

The Aroclor compounds are among the most versatile chemically-made materials in industry. Aroclors are useful in many ways because of their outstanding inertness.

Aroclors are used alone for particular physical jobs such as insulating, heat transfer, sealants, and expansion media; and they are used as components or extendors in elastomers, adhesives, paints, lacquers, varnishes, pigments and waxes.

Aroclors must be highly pure, with dependably minimal traces of electrolytes for use in electrical applications. Electrical grade Aroclors must pass numerous stringent specifications. The following tests determine Aroclor quality:

Hydrolysis Stability	Measure of chemically unstable chlorine compounds.
Munch or Monsanto Stability Test	Measure of thermally unstable chlorine compounds at elevated temperatures.
Thermal Chemical Chloride	Developed by the General Electric Company to measure chemically and thermally unstable chlorine compounds.
Resistivity	Measure of insulative properties.
Power Factor	Measures power loss due to current through a capacitor.
Dielectric Constant	Measures the capacitance of a standard such as air compared to the capacitances of Aroclor.
Specific Gravity, Refractive Index	Measures of chlorination level.

The stability and electrical properties of electrical-grade Aroclors are paramount in quality considerations. The chlorination step of the process is most critical because many properties of the final product are determined by the properties of the crude Aroclor. Conditions in the chlorinator needed for a good quality product are:

1. Chlorination Temperature - The chlorination temperature must be greater than 120°C within 30 minutes from the beginning of the chlorination reaction to produce stable Aroclors. Results of research tests indicate that product stability is better as the initial chlorination temperature is increased.

COMPANY CONFIDENTIAL

HARTOLDMON0043084

APPENDIX M QUALITY CONSIDERATIONS (Cont'd.)

2. Ferric Chloride Concentration - Research has found that the ferric chloride concentration must be at least 0.03% to form stable products. Research recommends 0.05% ferric chloride. Lower catalyst ratios result in increased "addition" chlorination as opposed to "substitution" chlorination, indicated by higher chloride values and lower yields.

   The isomeric distribution of the final product is a function of the type and concentration of the catalyst used in the reaction.

   Homogeneous suspension of the catalyst is extremely important. Good catalyst contact cannot be attained without homogeneous suspension. Since ferric chloride does not mix well with biphenyl, the dry catalyst must not be poured into the chlorinator.

3. Geometry of Reacting Vessel - The shape of the reactor affects the circulation and flow pattern of the reactants. It is suspected that the chlorine gas channels through a void space in the existing catalyst basket. This problem is presently being studied.

   The reactor must be designed such that circulation of reactants is rapid and homogeneous and local over-chlorination does not occur.

4. Cleanliness - The ferric chloride settles to the bottom of the chlorinator. Areas of the packed bed become plugged with ferric chloride and channeling of reactant flow may result.

   A steam clean-out of the chlorinator may be an expedient method to remove the ferric chloride. This method was tried in the department, and evidently was successful. Further tests by the laboratory will verify the effectiveness of a steam clean-out.

5. Sparging - The sparger controls the gas distribution under the catalyst hold-up plate and the size of gas bubbles. It is not known whether the catalyst basket or sparger or both are the critical factors in achieving the proper flow of gas through the reactor. It is believed that the sparger should distribute small bubbles giving good gas distribution throughout the chlorinator. The small bubbles have a greater surface area per unit volume of gas for mass transfer and this should increase the reaction rate.

6. Raw Material Purity - The purity of raw materials can affect the quality of Aroclors. Sulfates are particularly harmful in the chlorine gas. It is suspected that sulfates poison the ferric chloride catalyst and sulfates some of the biphenyl. If the ferric chloride catalyst is poisoned, the effective catalyst concentration is reduced and thus unstable aroclors will be produced. The chemistry and mechanism of catalytic poisoning are not known for certain. Sulfonated biphenyl is carried over during distillation and is not removed by earth treating.

COMPANY CONFIDENTIAL

HARTOLDMON0043085

Dept. 246 - Process Description

AROCLOR

APPENDIX M

QUALITY CONSIDERATIONS (Cont'd.)

6. Raw Material Purity (Cont'd.)

Sulfonated biphenyl has ionic properties which lowers the resistivity of the finished product. A Brink Mist Eliminator has been installed in Dept. 246 to eliminate the chlorine impurities.

7. Earth Treatment - The factors affecting stability also influence the electrical properties of Aroclors. An absorbent will be ineffective if the Aroclor was not prepared in a manner such that a stable product was formed during the chlorination reaction.

However, research has found that absorbents are very effective for improvement of electrical properties by removing ferric chloride and tars carried over during distillation, provided the crude Aroclor has good stability.

The absorbent used in Dept. 246 (after distillation) is Attapulgus Earth, the concentration should be 0.5% for Aroclor 1242 and 0.1% for other Aroclors. The earth must be heat treated at 250°C for a minimum of 4 hours before addition to the Aroclor. Heat treatment reduces the moisture and activates the earth.

8. Lime Treatment - It is important that proper amount of lime (250 pounds per still run) be added to the still to prevent sublimation of ferric chloride.

9. The blend tanks, finished product tanks, and Aroclor 1242 and 1254 storage tanks are blanketed with nitrogen gas. Nitrogen blanketing maintains the electrical properties of the Aroclors by preventing corrosion of the equipment.

In summary, the chlorination step of the process is the most critical. A good quality Aroclor cannot be produced if a stable compound is not formed during chlorination.

Once a stable compound is formed, other techniques such as use of lime, absorbents, and nitrogen blanketing are used to maintain and improve electrical properties.

COMPANY CONFIDENTIAL

HARTOLDMON0043086

Dept. 246 - Process Description

AROCLOR

APPENDIX M QUALITY CONSIDERATIONS (Cont'd)

Absorbents - Numerous absorbents have been screened in the laboratory at various contact temperatures for their effect on resistivity of plant untreated Aroclor 1242.

The most satisfactory absorbent pound for improving the resistivity of Aroclor 1242 was LVM attasorb. Table I of this section lists the laboratory results of the different absorbents used to treat Aroclor 1242.

Degradation of Aroclors

Degradation of Aroclors, which leads to loss in electrical resistivity, is one of the short comings of using Aroclor as a dielectric, expecially since only a very minor degradation can cause a serious breakdown in electrical equipment.

The thermal degradation of fractionated Aroclor has been measured at 250°C and the amount of Hydrogen Chloride liberated was measured. The results of these tests are listed in table II of this section.

Aroclor 1242 has been degraded by ultraviolent light, and the decrease in electrical resistivity with irradiation time was measured. The plot of resistivity versus concentration is a curve for a weak electrolyte. It is possible to remove the conducting material brought about by photo-degradation, and restore the resistivity of its original value by passing the degraded material over activated alumina.

Thermal degradation of Aroclors is minor compared to photo chemical degradation. Thermal treatment causes release of a small amount of hydrogen chloride initially, but this evolution ceases after a short time. Such behavior is attributed to thermal degradation of impurities. If Aroclor is irradiated, then exposed to a thermal treatment, appreciably more HCl is liberated.

COMPANY
CONFIDENTIAL

HARTOLDMON0043087

Dept. 246 - Process Description

AROCLOR

APPENDIX M

QUALITY CONSIDERATIONS (Cont'd.)

COMPANY CONFIDENTIAL

TABLE I

ADSORBENT SCREENING DATA

Adsorbent	Adsorbent Pretreatment	Contact Temperature °C	Volume Resistivity at 100° ohm-cm. x 10°C
LVM Attapulgus Earth	None	60	3400
		80	2000
		100	2800
		120	2900
LVM Attapulgus Earth	Heated at 250°C 12 Hours	60	4200
		80	6400
		100	7200
		120	6100
LMV Attapulgus Earth	Heated at 350°C 12 hours	60	9300
		80	9000
		100	6300
		120	6300
LVM Attapulgus Earth	Heated at 350°C 4 hours	60	2400
		80	5600
		100	6000
		120	5700
Attasorb - LVM	None	60	9700
		80	12,100
		100	13,700
		120	17,800
Attaclay	None	80	10,200
		100	5400
		120	6000
Activated Alumina (Alcoa Grade F-3 -325 mesh)	None	60	2100
		80	2500
		100	2800
		120	3100
Voclay 325 (Western Bentonite)	None	80	5700
		100	3800
		120	9700
Panther Creek (Southern Bentonite)	None	80	6200
		100	11,300
		120	8100
Filtrol Grade 1	None	80	2600
Zeolex 7 (Zeolite)	None	80	7000
Florite 60 mesh (Activated Bauxite)	None	100	3600
Suprex L-G (Kaolin)	None	100	4500
Attasorb - LVM	Heated 350°C 12 hours	100	12,200
Attasorb - RVM	None	100	16,200

TRAN 007066

HARTOLDMON0043088

Dept. 246 - Process Description

AROCLOR

APPENDIX M

QUALITY CONSIDERATIONS (Cont'd.)

TABLE I (Cont'd.)

Adsorbent	Adsorbent Pretreatment	Contact Temperature °C	Volume Resistivity at 100°C ohm-cm. x 10°C
Linde Molecular Sieve Type 4-A	None	60	2100
Laminar Alumina	None	60	900

Note: Resisvitity of Aroclor before treatment = 1 x 10^9 ohm-cm.

COMPANY CONFIDENTIAL

TRAN 007067

HARTOLDMON0043089

APPENDIX M

QUALITY CONSIDERATIONS (Cont'd.)

TABLE II

THERMAL DEGRADATION OF AROCLORS AT 250°C

Aroclor	gm. of HCl/gm x 10^6	Heating Time
1221	3.35	1 hr.
	6.73	2 hrs.
	11.07	5 hrs.
1232	3.91	1 hr.
	6.42	2 hrs.
	9.81	5 hrs.
1242	5.96	1 hr.
	9.58	2 hrs.
	13.00	5 hrs.
1248	3.61	1 hr.
	5.44	2 hrs.
	8.48	5 hrs.
1254	3.43	1 hr.
	3.96	2 hrs.
	6.43	5 hrs.

COMPANY CONFIDENTIAL

TRAN 007068

HARTOLDMON0043090

Dept. 246 - Process Description

AROCIOR

APPENDIX N

MISCELLANEOUS

REFERENCES

1. St. Louis Report No. 2694, Job No. 171-1028, February 15, 1952.

Title: Operation of Aroclor Stills At Increased Pressure For Increased Rates

Summary: Distillation runs were made at 20 to 30 mm Hg. The rate of distillation of 1200 series Aroclors increases with pressure.

2. St. Louis Report No. 2755, Job No. 2-02-760.01 - 3948-3 March 6, 1961.

Title: Improved Aroclor 1242 Studies

Summary: Studies were carried out to determine the effect of temperature, chlorine content, and catalyst concentration in chlorinated biphenyl mixtures. 2,4-dichlorobiphenyl is the percursor of the high dielectric constant, trichlorinated components.

3. St. Louis Report No. 2072, Job No. 2-02-750.01-3428, May 4, 1958.

Title: Final Report on Aroclor Process Studies.

Summary: Purity of raw materials, catalyst concentration, reaction temperature and rate of chlorination were the variables studies with respect to their influence on the stability of the finished product.

4. St. Louis Report No. 2540, Job No. 171-616, December 28, 1958.

Title: The Effect of Prolonged Heat on the Electrical Properties of Aroclors.

Summary: Aroclors 1232, 1242, 1248 and 1254 were held at 130°C. The power factor was periodically measured.

5. St. Louis Report No. 2234, Job No. 171-451, June 14, 1956.

Title: Evaporation Loss of Aroclors.

Summary: The evaporation loss of Aroclors was determined at 100°C under static conditions.

COMPANY CONFIDENTIAL

HARTOLDMON0043091

Dept. 246 - Process Description

AROCLOR

APPENDIX N

MISCELLANEOUS (Cont'd.)

REFERENCES (Cont'd.)

6. St. Louis Report No. 2790, Job No. 171-1028, July 3, 1952.

Title: Increased Production of Aroclors by More Rapid Rate of Chlorination.

Summary: Chlorination rate was increased from 400 pounds per hour to 770 pounds per hour. Aroclors produced at increased rate was within specifications.

7. St. Louis Report No. 1842, Job No. 2-02-750.01-3368 July 12, 1957.

Title: Use of Ferric Chloride as Catalyst for Production of Aroclor 1242.

Summary: The comparison of stability chloride values revealed no difference between the product made with iron turnings as catalyst and ferric chloride as catalyst.

8. St. Louis Report No. 2096, Job No. 2-02-750.01-3202, June 6, 1958.

Title: Resisistivity Improvement of Aroclor 1242.

Summary: Numerous absorbents were screened at various contact temperatures for their effect on resistivity of plant untreated Aroclor 1242. Heat activation of Attapulgus Earth was also studied.

9. E. E. Martin, OPERATING INSTRUCTIONS FOR DEPT. 246, W. G. Krummrich Plant, 1961.

10. E. E. Martin, PROCESS DESCRIPTION FOR MANUFACTURE OF AROCLORS, 1962.

11. E. Mather, PROCESS DESCRIPTION FOR MANUFACTURE OF AROCLORS, 1955.

COMPANY CONFIDENTIAL

TRAN 007070

HARTOLDMON0043092

Dept. 246 - Process Description

AROCLOR

APPENDIX N MISCELLANEOUS

The following table shows the results of tests which measured the evaporation losses of the various Aroclors.

Aroclor	Evaporation Rate gms/cm^2/hr./100°C
Aroclor 1221	.00174
Aroclor 1232	.000874
Aroclor 1242	.000338
Aroclor 1248	.000152
Aroclor 1254	.000053
Aroclor 1260	.0000088
Aroclor 1262	.0000132

From the above results, the evaporation rate for Aroclor 1262 is greater than that of Aroclor 1260. This unexpected result may be explained by some difference in the conditions of which the two lots were prepared.

The reaction products in Biphenyl Chlorination differ with the type of catalyst used. Results of research investigations are listed below:

	Isomer Distribution of Aroclor 1232						
Catalyst	2 -	4 -	2,2' -	2,4 -	2,4' -	4,4'	tri
$FeCl_3$	15%	7%	15%	6%	38%	11%	9%
$SbCl_3$	11	0.7	20	3.6	38	18	9
$TiCl_4$	11	0	20	2.2	46	14	7
$SnCl_4$	24	1	16	2.3	38	18	1.3

COMPANY CONFIDENTIAL

TRAN 007071

HARTOLDMON0043093

Dept. 246 - Process Description

AROCLOR

APPENDIX N MISCELLANEOUS (Cont'd.)

Some of the typical operating difficulties in department 246 and possible remedies are given below:

CHLORINATORS

Trouble	Cause	Remedy
Chlorinators operating against too much back pressure	Plugged off-gas lines	Open lines and steam them out. Dry out lines with air before resuming operation.
Chlorinator slow in picking up gravity	1. Low chlorine pressure or low chlorine gas concentration 2. Wet biphenyl	1. Call chlorine dept. for more gas 2. Check biphenyl storage tanks for moisture.

BLOW TANKS

Blow tanks stacking off	Operating chlorinators with vent open	Close chlorinator vent; possibly reduce air to blow tanks

STILLS

Not enough vacuum	1. Ejectors not pulling properly 2. Coke scrubber contains water	1. Check ejectors 2. Drain coke scrubber

36" SPARKLER FILTER

Foreign material in filtrate samples	Dirty filter or broken paper	Clean and re-paper press

COMPANY CONFIDENTIAL

TRAN 007072

HARTOLDMON0043094