r the purpose of research or private study only.

PLAINTIFF'S EXHIBIT
CT-1070

# VALUATION OF THE CEMENT PROPERTIES ON THE PRODUCTION OF ASBESTOS-CEMENT

V. Ehrman

Translation from Czech: Copyright Reserved

ASTEX PUBLISHING CO.)

---

There has been taking place for quite a long time discussions ween the manufacturers of asbestos-cement articles and cement as the characteristics of cement suitable for manufacture of asbestos-ent articles. On the one hand, one has to take into consideration production technology and the quality of the asbestos-cement icles manufactured by using any specific cement, and on the other d the cement characteristics from the point of view of cement works ndards. Unfortunately it is not always true that cement satisfying the production standards is also suitable for the manufacture of estos-cement articles. The present article deals with a method table for the evaluation of the suitability of cement for the ufacture of asbestos-cement articles.

---

In the course of time there have been specified various require-ts for the quality of cement suitable for the manufacture of estos-cement articles, for instance the degree of grinding, specific face area, compression strength, start and finish of setting, mical and mineralogical composition, but all these requirements were mulated mainly on the basis of prolonged empirical experience. thermore, up till now, it is still not quite clear why cements of ilar or even the same chemical or mineralogical composition behave te differently under the conditions of manufacture of asbestos-ent articles.

Cement constitutes 85-88% of the asbestos-cement mixture. Thus is extremely desirable to have a method for the evaluation of the ent characteristics prior to its use in the manufacture of asbestos-ent articles. The existing methods for the evaluation of cement

..../2

ality are based on its use as a binder for concretes and mortars, l in Czechoslovakia this characterisation is carried out according standard CSN 72 2121. In the case of the manufacture of asbestos-ent articles the process conditions are quite different, and thus ress should be placed on different characteristics of cement.

Abroad, use is being made since the fifties of a method veloped at Johns-Manville laboratories specifically for the aluation of the characteristics of cement, which is to be used for e manufacture of asbestos-cement articles (1). This method is lled the Sag-Test and is also known in Europe (2). This method kes it possible to determine the plasticity of the fresh asbestos-ment material, the amount of water retained in the articles after s shaping and pressure treatment, density of the set article and s bending compression strength. Since these studies are carried t by using the same raw materials and the same production conditions d only the cement/is used being changed, then the changes in mixture aracteristics may be assigned to be due to the cement. This thod is based on the determination of the degree of plasticity of e asbestos-cement mixture by establishing its deflection from the risontal under the action of constant load.

G-TEST METHOD.

The equipment used for this test is illustrated schematically i Fig.1. In this test there are used 32g. of asbestos fibres, g. of siliceous flour and 80g. of the cement being evaluated. ie mixture is first dry-blended for 10 minutes in a drum rotated : 90 rpm, and in the actual test 150g. of the resulting mixture e used. The weighed sample is mixed with 1000 ml of water 1°C, pH 6-7) for 1 min. at 500 rpm. The time indicated in the metable presented in Fig.2 is measured from the instant the cement mes into contact with water. The resulting slurry is transferred mediately to a filtration vessel and in 1:15 min. the water limination is commenced. A vacuum of 405 torr is maintained. i the course of the dewatering and formation of the asbestos-cement ake one must ensure that the compaction and evening-out process ake place under strictly defined conditions, and the pressure is

..../3

CTD028903

o maintained at a strictly defined level. The asbestos-cement e is maintained under vacuum for 3 min.45 sec. and then is taken of the dewatering vessel. The same conditions are used for the paration of four asbestos-cement cakes.

The shaped cake is weighed in the course of the next 30 sec. and s its density after completion of the filtration process is ablished. The weighed cake is then subjected to a pressure of 4 kp/cm$^2$ (320$\psi$ ). The pressure treatment should be started in 50 min., a maximum pressure should be attained in 7 : 00 min., and pressure should be maintained for 7:05 min. Then the pressure reduced and the pressure formed plate is removed from the press.

The resulting plate is weighed and then is placed in the instrumen d for the evaluation of its bending strength. The micrometric icator should be set to zero. After placing of the plate in ition the indicator indicates its thickness, and at the same time position of the handle indicates the initial value for the Sag-Test ermination. In the course of 9.00 min., the arrester of the trument is released and after 10.00 min. the deflection value is )rded. A total load of 140.0g. is applied to the centre of the te, and the distance between the plate supports is 152.4mm (6 finger value of deflection is measured accurate to three places of decimal different for different cements and in general lies in the range .080mm.

After the measurements have been completed the cake is again wed to settle, and then is placed for 24 hours in a thermostat at ! and min. 90% relative humidity. Then the plate is transferred in autoclave and is subjected to a pressure of 7 kp/cm$^2$ (saturated m temperature of about 170°C) for 16 hours. Finally the plate mmersed for 24 hours in water at 23°C.

After this treatment the mass of the saturated plates in air and r is determined. Then the breaking test is carried out and ture thickness is measured. The sample is then dried (100-105°C, ours) and after cooling is weighed.

..../4

The measurements, which have been taken may be used for the ılculation of the following parameters: the water content of the esh sample after filtration and after pressure forming, the nding strength of the plates and the absorption and density of ıe plates formed by using the cement under investigation. The mbination of the plasticity of the material and the value of its nding deflection constitute complex parameter of the cement being ıed.

NCLUSION

It may be concluded on the basis of the studies carried out Johns-Manville on various types of cement and in the course of ıe last fifteen years that the behaviour of cement under the nditions of manufacture of asbestos-cement articles is quite fferent from its behaviour in the course of concrete production. ıe Sag-Test is capable for elucidation of some fundamental aracteristics and is suitable for use in the asbestos-cement chnology:

The temperature of the charge water has a positive effect on ment plasticity, i.e. the higher the water temperature (in the nge 16-30°C), the higher will be the plasticity (higher deflection).

The plasticity of the plate is inversely proportional to the ter content, i.e. the greater the deflection the lower will be e water retention. Thus for instance cement having deflection 2.540mm has water retention of 27-28%, while cement having low flection, e.g. 0.508mm, has water retention of 32-33%.

The low water content of the plate results in low porosity ter curing, and thus low water retention results in high strength. r instance, cement having water retention of about 28% can be used prepare plates of strength 295-309 kp/cm$^2$, while cement having ter retention of about 32% gives plates having a strength of only 6-253 kp/cm$^2$.

The introduction of the Sag-Test method in Czechoslovakia would rtainly clarify the problem of suitability of various cements for e manufacture of asbestos-cement articles.

bliography.

Johns-Manville Corp., Manual of Test Methods, Method No.425:11, 1958.
Klos: Asbest-zement. Springer-Verlag Wien-New York 1967

CTD028905

re Captions

1: Schematic representation of the Sag-Test equipment. blending funnel; 2 - trough; 3 - filtration box; 4 - suction k (2000 ml); 5 - mercury manometer (500 torr); 6 - air aspirator; device for manual tamping of the cake; 8 - smoothing spatula; support for the cake; 10 - plate for transfer of the cake; weighing balance (250g, accuracy 0.1g); 12 - laboratory press sing force of 5500 kp); 13 - Sag-Tester; a - air inlet; projection; A - filter paper; B - test cake; C - sieve (20 mesh); two sheets of filter paper; E - perforated plate (6.4mm openings); four sheets of filter paper; G - perforated plate (12.7mm open-).

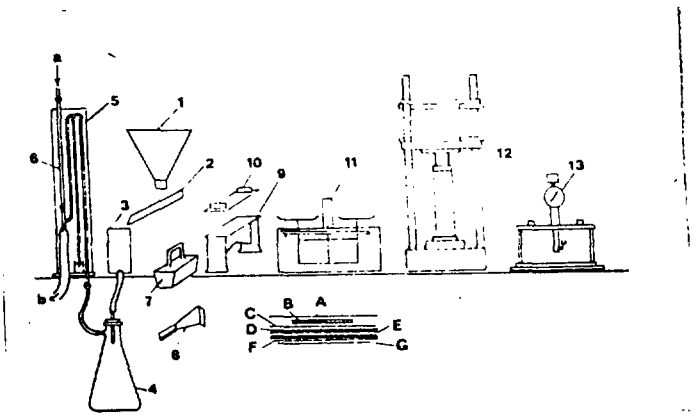


Fig.2..../6

2. Time schedule for Sag-Test

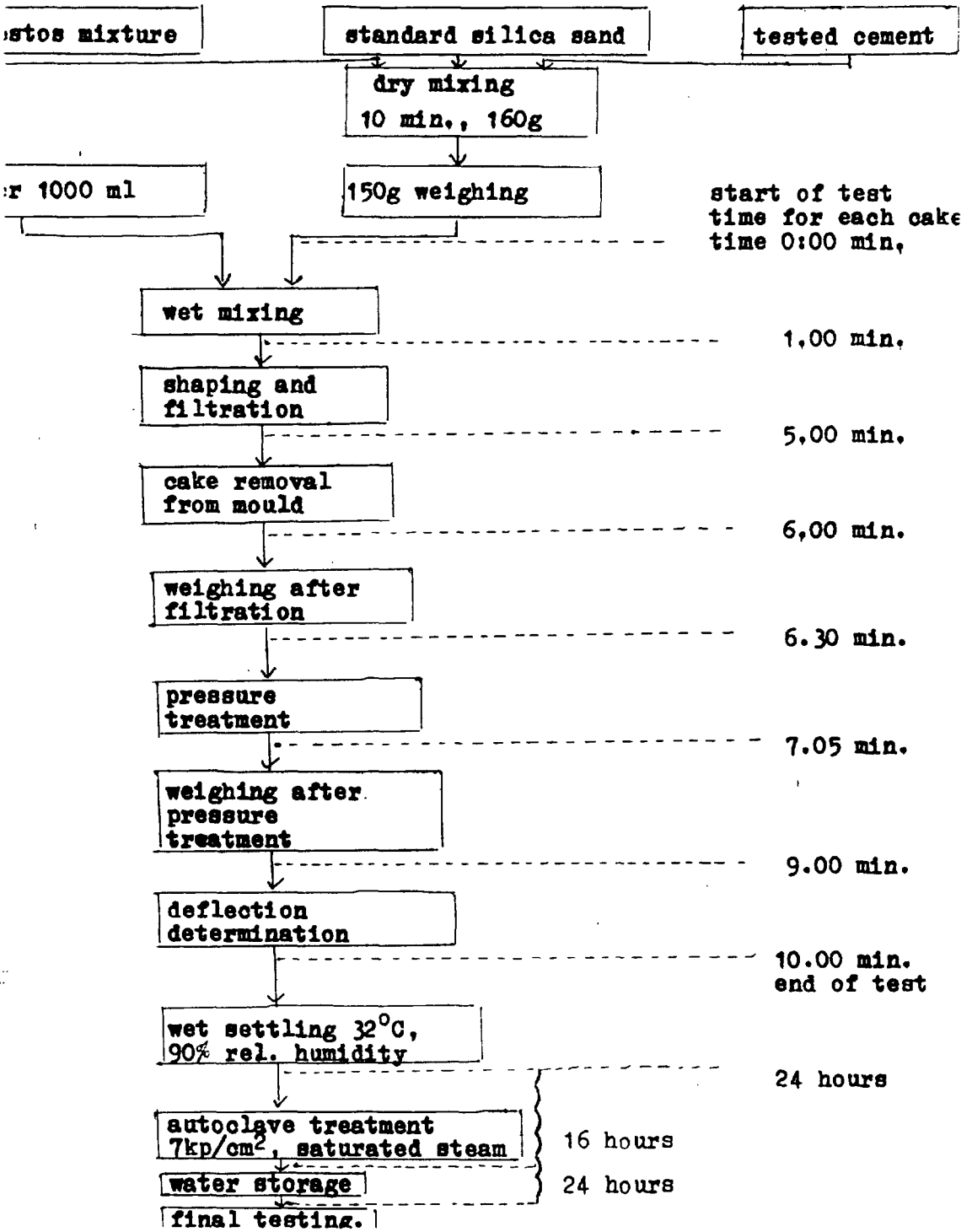


CTD028907