IV. PRODUCT AND INSPECTION STANDARDS: (Cont'd)

PLAINTIFF'S EXHIBIT K-1669

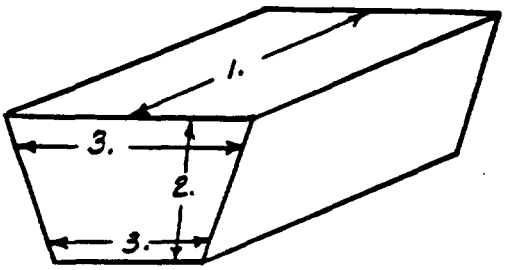

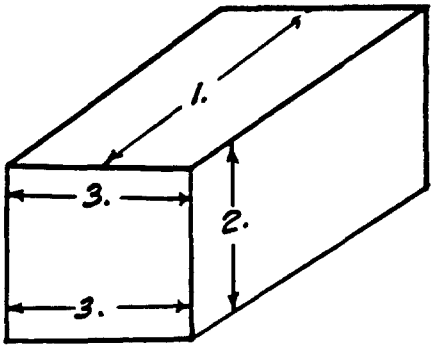

1. Length - Plus 1/16", Minus 1/16"
2. Width - Plus 1/16", Minus 1/16"
3. Thickness - Maximum Plus 1/16", Minus 1/16"
   Sales Dept. desires Plus 1/32", Minus 1/32"
4. Taper - A sheet metal template of the correct radius shall be used to check tapered blocks for proper fit to the prescribed radius. This template shall be so constructed that a complete radius of blocks may be set up for inspection. Blocks when set up must fit the prescribed template. The maximum gap which is allowable when the blocks are set up on the template shall not be more than 1/16".
5. Block Ends - Shall be square with the long faces to within 1/16".

DEFENDANT'S EXHIBIT OI-241

RETURN TO J-M RESEARCH FILE ROOM

X — INDICATES CHANGE — REASON: Change in title and specification number

AUTHORITY FOR CHANGE — E.C. Lindstrom

FILE-HOLDERS	C.A. de Vyver	M.W. Burleson		IND. ENG.	PROD. SUPT.	PLANT FINANCE OFFICE	RESEARCH LAB.	DIR. QUAL. CONTROL	MGR. QUAL. CONTROL	SUPR. QUAL. CONTROL

SUPERSEDES: Page 3 (issued 8/21/53) of specification 432-5

DATE ISSUED 9-15-58