accordance with the room demands. Where a heating effect is required, the air delivered is above room temperature. Where the heat generated within the room by occupants, sun, etc., is sufficient to cause overheating, the air delivery temperature must be below that of the rooms. It is customary to equip unit ventilators with control devices that prevent the delivery of air at a temperature that will cause cold drafts. Unit ventilators may be of the heating element or damper controlled type, constructed on the blow-through shown in Fig. 10, or draw-through principle as illustrated in Fig. 11.

Ratings of Unit Ventilators

Unit ventilators are customarily cataloged with two ratings: the *anemometer rating* and the *standard air rating*. The anemometer air rating is

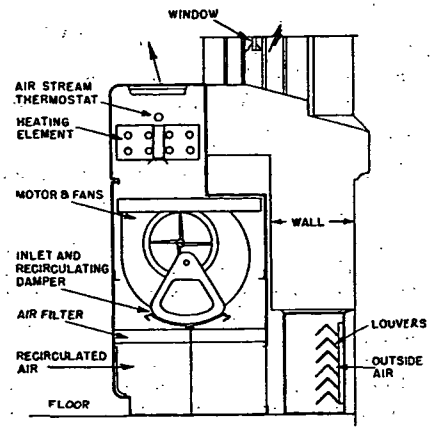

FIG. 10. TYPICAL BLOW-THROUGH TYPE UNIT VENTILATOR SHOWING ONE OF MANY ARRANGEMENTS OF DAMPERS AND HEATING ELEMENTS

peculiar to school house ventilation and was for many years the standard by which school officials checked and specified unit ventilator capacities. It originated as a convenient field measurement for checking air quantities, and is the basis of rating for ventilation requirements under many state and local building codes. The anemometer rating (air capacity) is obtained by averaging the air velocities obtained by an anemometer held over equal subdivisions of the outlet grille at a distance of 2 in. from the grille, and multiplying the average velocity by the gross area of the grille. (The average velocity is sometimes obtained by moving the anemometer over the outlet 2 in. from its face.) The anemometer rating is based on the final temperature of the air leaving the grille while the unit is delivering outdoor air and room air in the proper proportion and the heating element is supplied with steam or hot water as specified.

The standard air rating is obtained in accordance with the A.S.H.V.E. Standard Code for Testing and Rating Steam Unit Ventilators.[5] This code requires that the following rating information be supplied:

Rating Factors to be Specified. The rating of the unit ventilator shall specify:

a. Final temperature at different entering air temperatures.

b. Total EDR at different entering air temperatures.

c. Air delivered by the unit in cubic feet per minute at the *standard basis of rating* with the fans operated at rated speed, with all air being blown through the heating unit, and with the standard louver and grille on the outlet.

The Standard Basis of Rating shall be as follows:

a. Dry saturated steam at a temperature at the unit corresponding to an absolute pressure of 16.7 psi (218.5 F).

b. Entering air temperature of zero Fahrenheit degrees.

c. Volume delivered in cubic feet per minute converted to standard air at 70 F.

Rating Tables for unit ventilators shall contain the following data in addition to the standard rating, for entering air temperatures from −30 F to +60 F:

a. Inlet temperature, Fahrenheit degrees.

b. Final temperature, Fahrenheit degrees.

c. Total EDR at the specified entering temperature.

d. Surplus or heating EDR at the specified entering temperature.

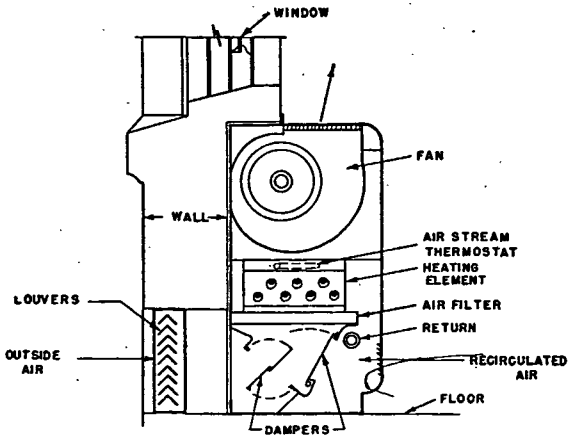

FIG. 11. TYPICAL DRAW-THROUGH TYPE UNIT VENTILATOR SHOWING ONE OF MANY ARRANGEMENTS OF DAMPERS AND HEATING ELEMENTS

Surplus or Heating Equivalent Direct Radiation for the purposes of this code shall be construed to mean difference between the total EDR at a specified inlet temperature and the EDR required to heat the air from that temperature to 70 F.

Table 2 shows the air handling capacities by the two methods of rating and the approximate room heating equivalent in EDR of an intermediate size of heating element. Heating elements are available for either a higher or lower capacity.

Heating Capacity Requirements for Unit Ventilators

Since a unit ventilator has the dual function of introducing outdoor air for ventilation and maintaining a specified room temperature, the heat required by the unit may be similarly divided as (1) *heat required for ventilation* (H_v) and (2) *surplus heat* (H_s). The *surplus heat* is available for maintaining room temperatures. If auxiliary radiation is installed, the *surplus heat* requirement may be reduced by a corresponding amount. The sum of H_v and H_s is the total heat (H_t) to be supplied by the unit ventilator.