File Copy

AMERICAN STANDARD

G-2 GAS BOILER

INSTRUCTION MANUAL

NON-PACKAGED BOILERS FLUSH OR DELUXE JACKETS

DESIGN CERTIFIED BY AMERICAN GAS ASSOCIATION

NOTICE TO INSTALLER AND OPERATOR
THIS BOOKLET MUST BE AFFIXED ON OR ADJACENT TO THE HEATING EQUIPMENT.

PLAINTIFF'S EXHIBIT
ASI-364
02181

BP-32942-02

TO THE OWNER:

The American-Standard Boiler which has been installed for you is the heart of your hydronic heating system. Its design represents advanced engineering and manufacturing techniques to produce a product which will provide you with heating comfort at the lowest operating and maintenance cost. The sections are made of cast iron which is well known for its long life and corrosion resistant properties. When hot water is used as a heating medium, the entire system is filled with water and an expansion tank provides space for the increased volume as the water in the system expands when it is heated. Under no conditions should any boiler be fired unless it is properly filled with water. If a boiler is not in use during the winter season it must be drained or otherwise protected against freezing temperatures.

A gas fired boiler uses gas as a fuel. The chemical composition of natural gas is similar to gasoline which is used as the fuel in an automobile engine. The toxic nature of automobile exhaust fumes is well known. These fumes are toxic because the hydrocarbon fuel is not completely burned. In a properly adjusted and normally operating gas fired appliance such as a kitchen range, boiler, water heater, etc., the hydrocarbon fuel is burned completely, producing harmless combustion by-products, and these products are normally vented to the outside atmosphere. Normal prudence will dictate that the venting system and combustion process of any gas fired appliance be checked periodically to assure that normal operation is taking place. Any abnormalities in combustion or venting of flue products to the outside atmosphere should be promptly corrected.

By following the suggestions contained in this manual, you can assume your boiler will function properly for many years. Should any problem arise, contact your nearest American-Standard contractor, whose name can be found in the "yellow pages" of your telephone directory.

AMERICAN STANDARD, INC.

Information relative to the rating and fuel requirements is located on the rating plate mounted on the front of the boiler. Please refer to this information and include model number and series number when ordering replacement parts.

NOTE: All parts of this boiler have been carefully inspected and packed.
See packing and parts list sheet for details.

In case of shortage, make sure that all parts have been removed from shipping container and examine packing material thoroughly. If parts cannot be found, report shortage to your dealer, giving boiler size, series number, date, inspector's number and packer's number (See PARTS LIST and packer's check ticket).

NON-PACKAGED G-2 GAS BOILERS

INDEX

	PAGES
Views and Dimensions	1,2
Tappings: location and use	3
Installation Requirements	4
Locating Boiler	4
Clearances	4,5
Caution: Piping Heating and Cooling Units	5A
Testing Boiler Sections	6
Boiler Assembly	
Floor pan, radiation shield	6
Platework, main burners, manifold	6
Canopy	7
Pilot location; location of other burner equipment	8
Jacket	9 - 11
Gas Piping	11,12
Pilot, gas valve, manifold	13
Lighting instructions	13
Piping water boilers	14,15
Piping steam boilers	16
Installing draft diverter	17
Controls	17,18
Wiring	18 - 21
Air For Combustion and Ventilation	22
Filling System With Water	23
Checks Before Starting	23
Gas Pressure Adjustment, pilot and main burners	24
Main Burner Air Adjustment	25
Care and Maintenance, Annual	25
Maintenance During Operation	26
Miscellaneous--Important	26
Inspecting and Cleaning Boiler	26
Cleaning Main Burners	27
Cleaning Boiler Sections	27
Cleaning Steam Systems	27
Low Water Cutoff Check (steam systems)	28
Caution to Installer and Owner	Inside Back Cover

deluxe jacket model
with circulator
and combination control
for forced circulation
with tankless heater

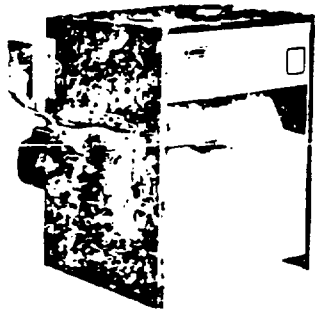

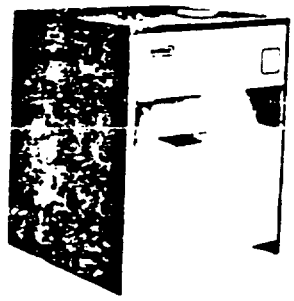

de luxe jacket model
less controls

flush jacket model
less controls

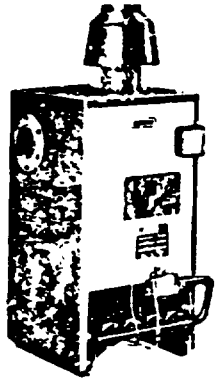

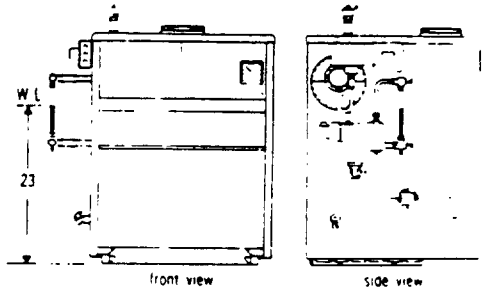

deluxe jacket model
with controls for steam

NOTE: These views show typical water and steam boilers with and without controls. Many combinations of controls and control systems to meet special requirements are possible.

G-2 ratings (natural & propane gas)

boiler number	for installations from sea level to 2000 ft • A.G.A. ratings input (Btu/hr)	A.G.A. ratings output (Btu/hr)	net I=B=R ratings •• water (Btu/hr)	net I=B=R ratings •• steam (sq. ft.)	net I=B=R ratings •• steam (Btu/hr)	chimney diameter (inches)	chimney height above draft-hood (feet)	water content (gallons) water boiler	water content (gallons) steam boiler
G-23	60,000	48,000	41,700	150	36,000	4	10	7.6	4.9
G-24	90,000	72,000	62,600	225	54,000	5	10	9.6	6.2
G-25	120,000	96,000	83,500	300	72,000	5	10	11.7	7.6
G-26	150,000	120,000	104,300	375	90,000	6	10	13.7	8.9
G-27	180,000	144,000	125,200	450	108,000	6	10	15.7	10.2
G-28	210,000	168,000	146,100	525	126,000	7	10	17.7	11.5
G-29	240,000	192,000	167,000	600	144,000	7	10	19.7	12.9
G-210	270,000	216,000	187,800	675	162,000	7	10	21.7	14.2
G-211	300,000	240,000	208,700	750	180,000	7	10	23.7	15.5

optional tankless heaters (forced hot water only)

I=W=H ratings—(gpm)▲ heater 218•	heater 222•	heater 226•	heater 232•
—	—	—	—
2½	—	—	—
—	3	—	—
—	3¼	—	—
—	3½	4	—
—	3½	4¼	—
—	3½	4¼	4½
—	3½	4¼	4¾
—	3½	4½	5

• For altitudes above 2000 ft., ratings should be reduced at the rate of 4% for each 1000 ft. above sea level.

•• Net I=B=R ratings shown are based on a piping and pick up allowance of 1.333 for steam and 1.15 for water. American-Standard should be consulted before selecting a boiler for installations having unusual piping and pick up requirements.

▲ Gallons water per minute heated from 40°F to 140°F with 200°F boiler water temperature.

• Last two digits designate lineal feet of Tru Fin tubing in heater coil. Domestic hot water connection size is ½" for all heaters.

DIMENSIONS

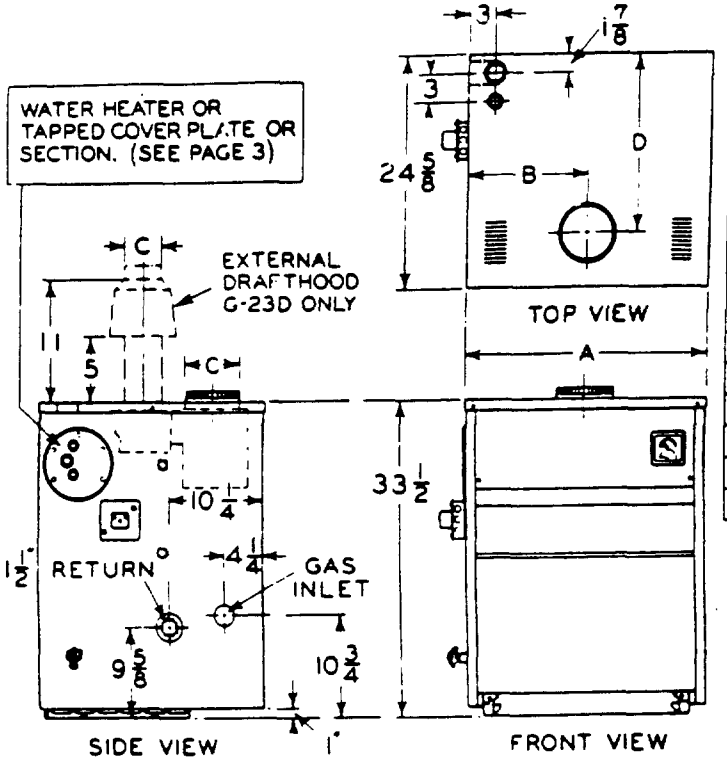

DELUXE JACKET

BOILER NUMBER	No. OF SECTIONS	No. OF BURNERS	A	B	C	D
G-23D	3	2	13 1/8	6 9/16	4	11 3/8
G-24D	4	3	16 3/8	8 3/16	5	19 1/2
G-25D	5	4	19 5/8	9 13/16	5	19 1/2
G-26D	6	5	22 7/8	11 7/16	6	19
G-27D	7	6	26 1/8	13 1/16	6	19
G-28D	8	7	29 3/8	14 11/16	7	19 3/8
G-29D	9	8	32 5/8	16 5/16	7	19 3/8
G-210D	10	9	35 7/8	17 15/16	8	19 1/8
G-211D	11	10	39 1/8	19 9/16	8	19 1/8

NOTE - EXTERNAL DRAFTHOOD IS PROVIDED FOR G-23-D BOILER

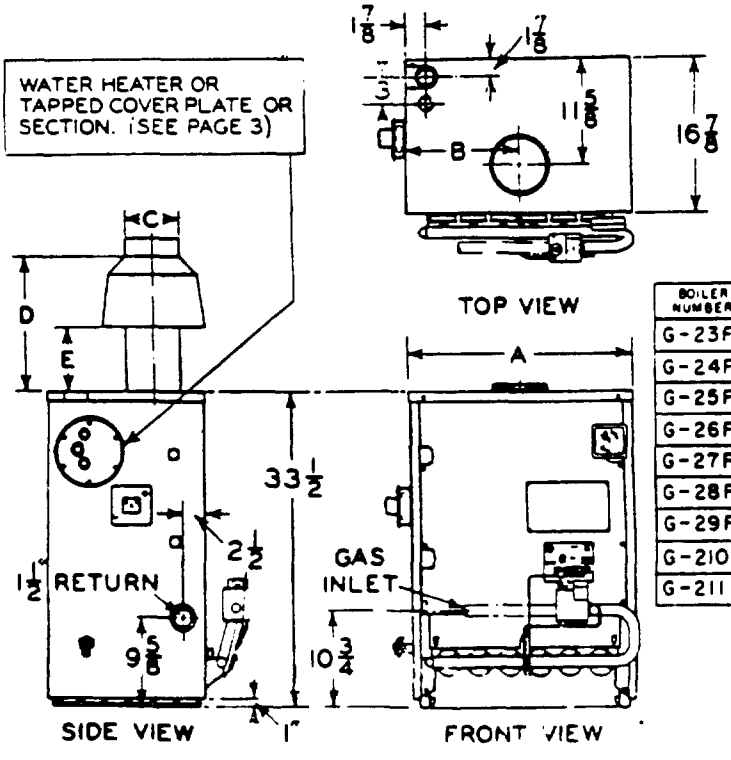

FLUSH JACKET

BOILER NUMBER	No. OF SECTIONS	No. OF BURNERS	A	B	C	D	E
G-23F	3	2	11	5 1/2	4	11	5
G-24F	4	3	14 1/4	7 1/8	5	14	7
G-25F	5	4	17 1/2	8 3/4	5	14	7
G-26F	6	5	20 3/4	10 3/8	6	16 1/2	9
G-27F	7	6	24	12	6	16 1/2	9
G-28F	8	7	27 1/4	13 5/8	7	20 1/4	12
G-29F	9	8	30 1/2	15 1/4	7	20 1/4	12
G-210F	10	9	33 3/4	16 7/8	8	25 3/4	16
G-211F	11	10	37	18 1/2	8	25 3/4	16

TAPPING LOCATIONS AND USE

TYPES OF LEFT END SECTIONS

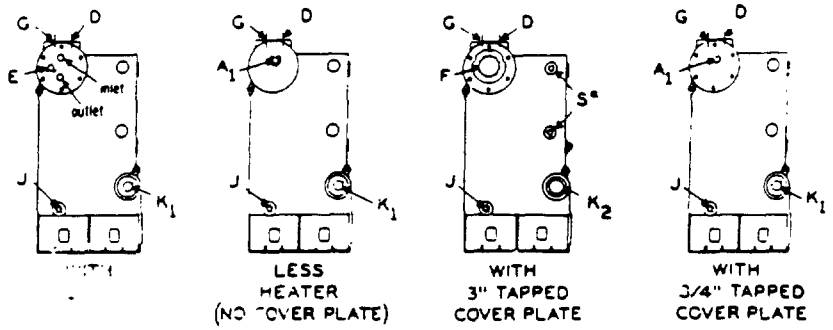

RIGHT END SECTION

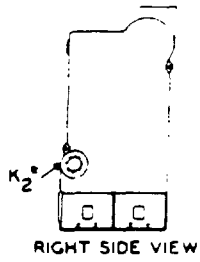

*Not tapped, forced hot water boilers

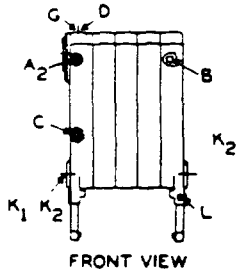

NOTE: NO TAPPINGS, BACK OF SECTIONS

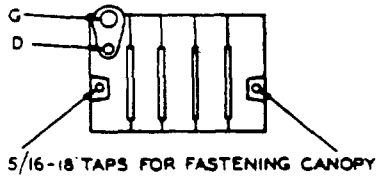

NOTE: All Boilers (except G-23) with Cover Plates on left end section will accept tankless heater. See Table, Page 1. Heaters are for use with forced hot water, only. Steam or gravity water boilers may be converted to forced hot water by changing controls and converting piping system.

USE OF TAPPINGS SHOWN

TAPPING LOCATION	TAPPING SIZE	RECOMMENDED USE
A_1, A_2	3/4"	Water: High Limit or Combination Control Steam: Optional steam pressure control
B	1/2"	Water: Temp. - Altitude Gauge Steam: Pressure Gauge
C	3/4"	Tapped on All-Purpose Boilers Only. Optional Use. for circulator (reverse acting) control, standby low limit. etc.
D	3/4"	Water: Air vent and relief valve. Steam: Pop safety valve.
E	3/4"	Combination Control or Low Limit. in Heater.
F	3"	Steam: Supply and Blowoff Water: Gravity Supply: Optional Forced Supply.
G	2"	Water: Forced Supply Optional Gravity Supply
J	3/4"	Drain Cock (left end section only)
K_1	1 1/2"	Forced hot water return
K_2	2"	Steam or water return
L	1/2"	Section Drain Plug (Right End Section Only)
S	1/2"	For steam gauge glass with low water cutoff

INSTALLATION REQUIREMENTS

The complete installation should be made per the latest edition of American National Standard Z21.30, Installation of Gas Appliances and Gas Piping, obtainable from the American Gas Association, 8501 East Pleasant Valley Road, Cleveland, Ohio 44131.

LOCATING BOILER

For basement locations, when floor is not level, or water may stand, build a level concrete base, at least 3" high.

Locate boiler near the chimney used. Locate front, back and sides of boiler for clearance and convenience.

CLEARANCES FOR SERVICING AND SAFETY

All G-2 Boilers are design certified for closet installation with clearances shown on the boiler jacket and in the table and sketches below.

G-2 Boilers, natural gas or propane, are design certified for use on combustible floors when the Floor Pan and Radiation Shield are used (See Page 8).

G-2 boilers approved for installation in utility rooms, alcoves closets . . . anywhere

All G-2 boilers, are A.G.A. design certified for closet installation. Tests show that temperatures of adjacent combustible surfaces will not be excessive when boiler is installed in a closet type enclosure with the specified minimum clearances. These clearances (see table, below) apply after considering the ready accessibility to the unit for adjustment, repair and replacement of parts. With the closet door open, there must be a minimum front clearance of 18 inches.

*Note: Area of each inlet and ventilating air opening — 1 sq. in. for each 1,000 Btuh input with a minimum of 100 sq. inches.

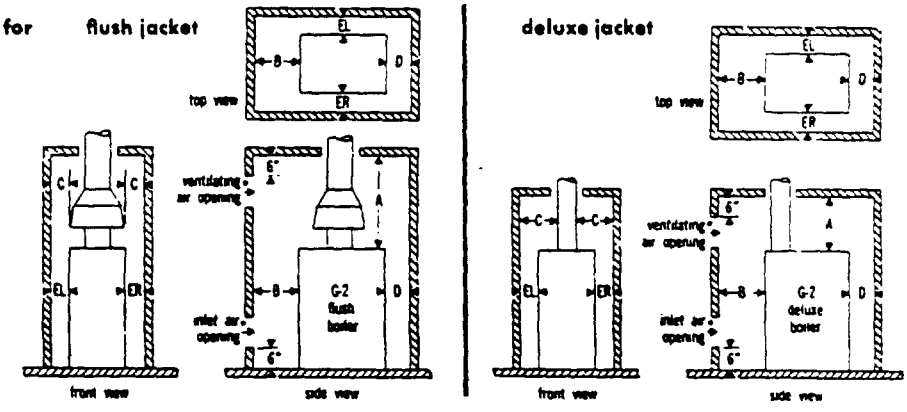

designation	symbol	minimum clearance—(inches) flush jacket and G-23 deluxe jacket	deluxe jacket, G-24 thru G-211
from top of boiler	A	56	24
from front of boiler	B	9	9
from flue	C	6	6
from back of boiler	D	3	2
from left side	EL	6	6
from right side	ER	5	0

For installation on non-combustible floors; for combustible floors only when equipped with floor pan and radiation shield.

CLEARANCES (continued)

A MINIMUM of 6" from external drafthood (if used) and all smokepipe (breeching) to any combustible material must be maintained.

Clearances for service access must also be maintained, as listed below. MAINTAIN THE LARGER CLEARANCE (safety or service) when two different clearances are listed.

Service Clearances:

1. When a circulator is mounted on the boiler return, allow the necessary access and clearance of wrenches, etc. to service or remove the circulator.

2. Allow AT LEAST 18" between any fixed obstruction and the boiler front, to allow installation and service of burners and pilots.

3. DOORWAYS must be wide enough to allow boiler entrance.

4. SMALL ROOMS OR CLOSETS: Boiler and other appliances (gas water heater, etc.) should be so arranged that one appliance can be removed or serviced without disconnecting or moving the other appliances in the room.

5. TANKLESS WATER HEATER clearance, boiler left side to a wall or other obstruction, must be as follows (minimum):

#218 Heater = 15"	#226 Heater = 24"
#222 Heater = 18"	#232 Heater = 31"

CAUTION

If and when this boiler is used in connection with refrigeration systems, boiler should be so installed that chilled medium is piped parallel with the heating boiler using appropriate valves to prevent the chilled medium from entering the heating boiler.

When hot water heating boilers are connected to heating coils located in air handling units, where they may be exposed to refrigerated air circulation, such boiler piping system shall be equipped with flow control valves or other automatic means to prevent gravity circulation of the boiler water during the cooling cycle.

The expansion tank should not be set in a cold or an exposed place. If the pipe leading to or from the tank freezes, serious damage may result. If valve of any description is installed in the piping leading to or from the expansion tank BE SURE THAT IT IS OPEN WHILE THE BOILER IS IN OPERATION.

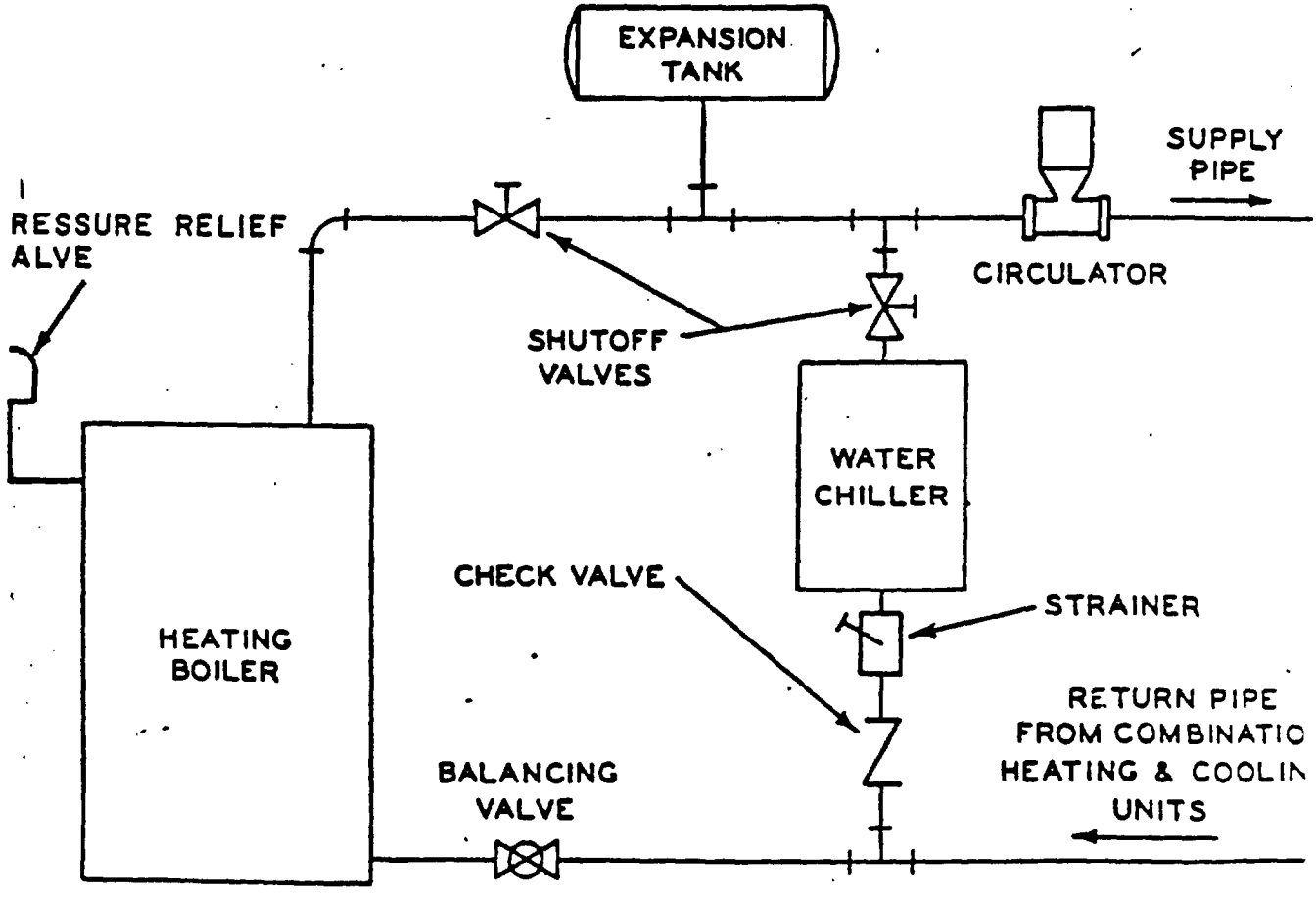

RECOMMENDED BOILER PIPING FOR COMBINATION HEATING & COOLING UNITS

BOILER INSTALLATION

Non-packaged boilers are shipped with the boiler sections factory assembled; the remaining boiler parts are assembled on the job site. Installation should be accomplished as follows:

Remove packaged boiler or section assembly from shipping skid and place in approximate final location (refer to Page 4, Locating Boiler).

TESTING

Before piping boiler, plug openings, fill boiler with water, and subject to not less than 10 lbs. nor more than 30 lbs. pressure. Inspect boiler inside and outside for leakage as a result of leakage from handling and shipping. To safeguard accuracy of controls supplied on boiler, do not install until after test of boiler. This precaution of testing the boiler will simplify handling of any necessary replacements or adjustments and assist in treating with claims against transportation companies. After test, drain and remove plugs where required, and continue.

INSTALL FLOOR PAN AND RADIATION SHIELD (when used):

When the G-2 Boiler is installed on a combustible floor, the floor pan and radiation shield (shown on Page 8) must be installed.

The floor pan is inserted, insulation side up, from below the manifold; it rests on lugs on the end sections, in the position illustrated.

The radiation shield, with flanges down, is inserted below the burner access door, to rest on lugs on the end sections, as illustrated.

ASSEMBLE PLATEWORK, MAIN BURNERS, MANIFOLD AND CONTROL PIPING (See Pages 1, 2 and 8)

1. Attach combustion chamber rear plate using two 5/16" x 1" Hex. Head Machine screws and 5/16" flat washers provided. Putty between top of plate and sections and at each end of plate to form gas seal.
2. Mount canopy on boiler sections and seal all around canopy with asbestos packing. (Be careful not to push packing under the canopy into the flueway). See Page 7.
3. Attach manifold piping and control assembly to front of boiler with four 5/16" x 1/2" Hex. Head cap screws and 5/16" flat washers provided. NOTICE, Deluxe Boilers - Install Jacket Reinforcement Bracket (Packed in Trim Container) under each manifold bracket when attaching manifold piping. See Figure 1, Page 19.
4. Attach pilot burner bracket and tubing assembly to the main burner marked PILOT with #10-24 x 5/16" round head machine screws. When ribbon type burners are supplied, the pilot burner bracket should be assembled over the end ribbon clamp. See Page 8.
5. Install main burners (with air shutters). Slide each burner UNDER manifold and into boiler. Slide rear (inlet) of burner over orifice spud on manifold, and lift and drop rear of burner into position on combustion chamber rear plate. NOTE: Locate burner with pilot as shown on Page 8. Install radiation shield and floor plate when required. See Page 9.
6. Install burner access door. (Back retaining clips engage cast lugs on right and left end sections).

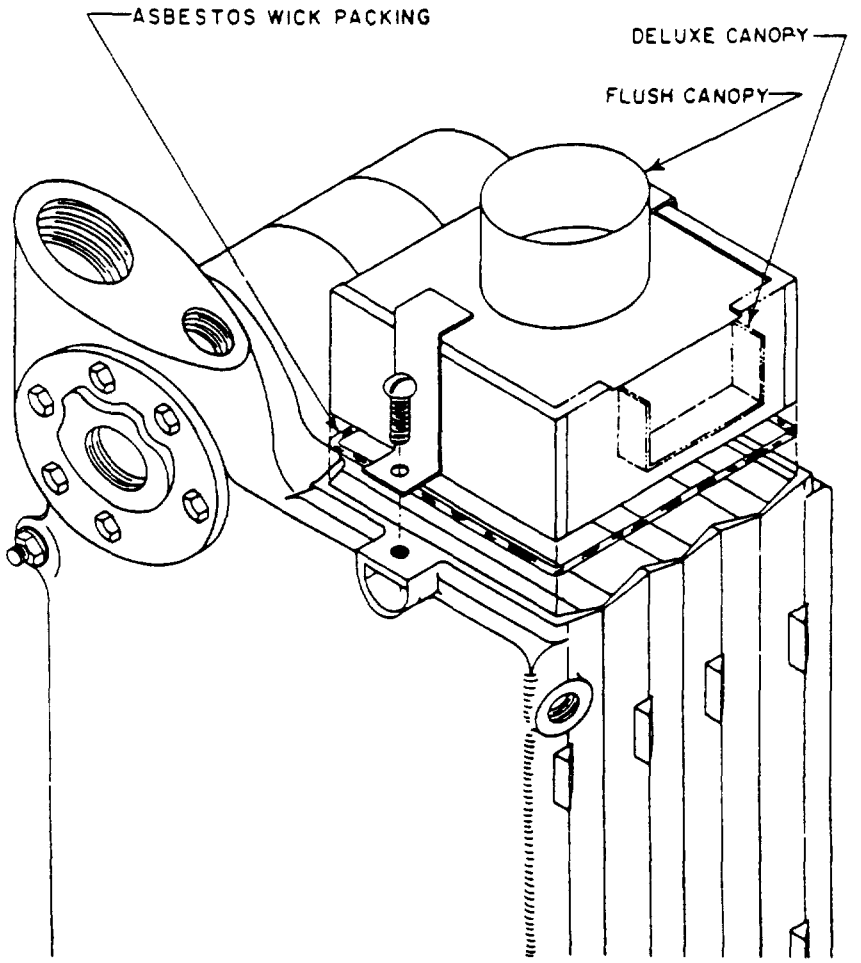

ATTACHING CANOPY TO BOILER

FLUSH CANOPY (for flush jacket) has round vertical outlet shown.
DELUXE CANOPY (for DeLuxe Jacket) has rectangular back outlet shown.
Place asbestos wicking on outer edge of boiler flue opening and place canopy on wicking as shown above. Insert 5/16" bolts through holes in canopy angle strap, and screw into tapped holes in section, as illustrated. Tighten until canopy compresses asbestos wick and is held securely against boiler top. Make final seal around canopy with boiler putty or cement.

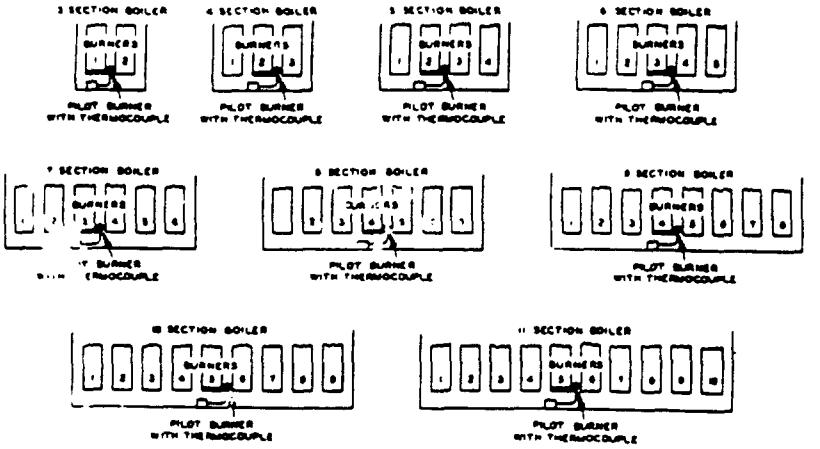

PILOT BURNER LOCATION

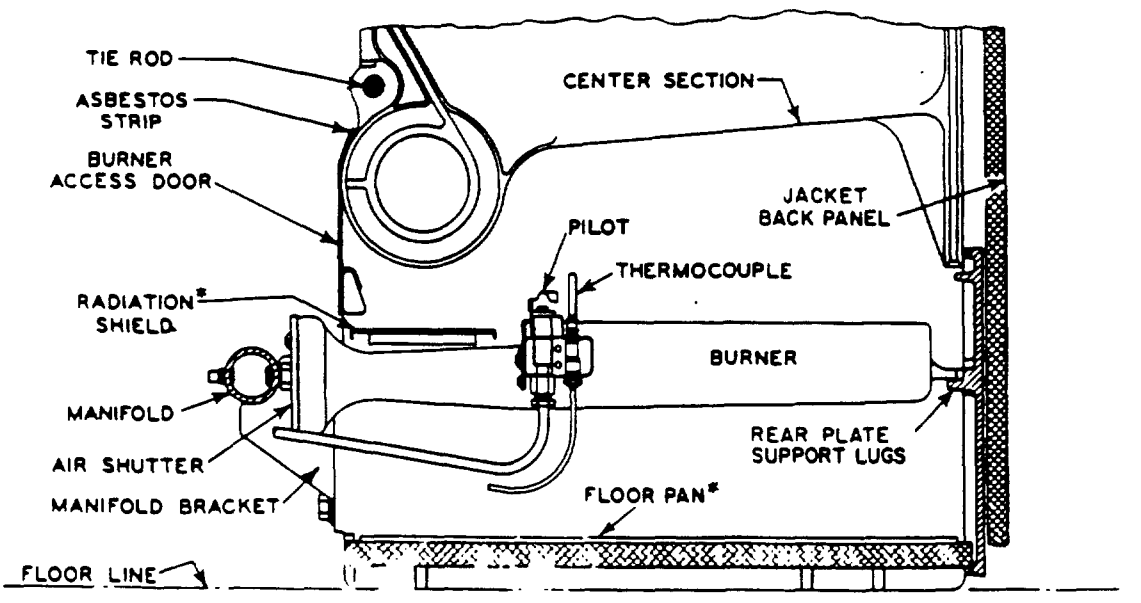

*NOTE: RADIATION SHIELD AND FLOOR PAN FURNISHED (SPECIAL ORDER) FOR COMBUSTIBLE FLOOR INSTALLATION

02192

INSTALLATION OF JACKET (Refer to Pages 1 and 2 for views):

IMPORTANT: Before installing jacket, plug all unused tappings and install bushings in tappings to be reduced. Remove jacket knockouts over tappings to be used. Jacket must be in place before controls and piping are installed.

FLUSH TYPE JACKET

Select L. H. Side Panel (panel with 7-5/8" diameter double knockout)

Assemble the Back Panel to the L. H. Side Panel with #10 x 1/2" sheet metal screws and place the assembled panels in approximate final position, against the boiler. LEAVE ALL JACKET SCREWS SLIGHTLY LOOSE. Assemble the R. H. Side Panel to the Back Panel with #10 x 1/2" sheet metal screws.

The design of the jacket provides for 1" clearance above the floor: place 1" supports under the panels until the jacket assembly is complete.

Assemble the Front Panel to the Side Panels with #10 x 1/2" sheet metal screws.

Attach spacer angle (when provided, see Page 10) to underside of Top Panel with two #10 x 1/2" sheet metal screws, then assemble Top Panel with flanges overlapping the front, back and side panels. Insert #10 x 1/2" sheet metal screws for holding top panel, then draw all jacket screws up uniformly tight. Remove jacket supports.

Attach lighting instructions, rating and series plates to front panel, over locations shown on panel, using screws provided.

DE LUXE TYPE JACKET

Install HORIZONTAL DIVERTER (see Page 17).

Install temperature-altitude gauge with 5 3/8" x 1/2" nipple and coupling in Tapping B (see Page 3).

Assemble left, right and back panels as for flush jacket (above). Attach drafthood baffle (below draft diverter) to side panels.

Assemble upper front panel to right and left panels. Install top panel with flanges overlapping front, side and rear panels.

Attach lighting instructions, rating and series plates to front panel, over locations shown on panel, using screws provided.

Install removable front panel by hooking rear side clips over matching clips on side panels, and top rear flange over drafthood baffle flange.

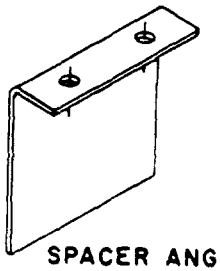

SPACER ANGLE

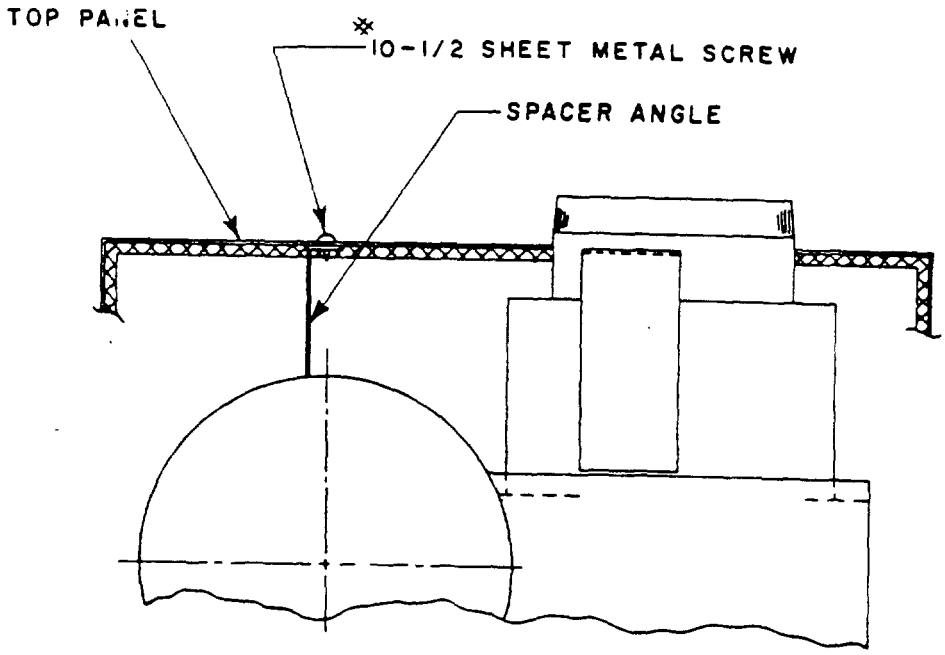

Select L. H. Side Panel (panel with 7-5/8" diameter double knockout).

Assemble the Back Panel to the L. H. Side Panel with #10 x 1/2" sheet metal screws and place the assembled panels in approximate final position against the boiler. LEAVE ALL JACKET SCREWS SLIGHTLY LOOSE. Assemble the R. H. Side Panel to the Back Panel with #10 x 1/2" sheet metal screws.

The design of the jacket provides for 1" clearance above the floor: place 1" supports under the panels until the jacket assembly is complete.

Assemble the drafthood baffle to the side panels with #10 x 1/2" sheet metal screws.

Assemble the Upper Front Panel to the right and left side panels with #10 x 1" sheet metal screws. Insert two sheet metal screws through each side panel into jacket reinforcement angles.

Place Top Panel with flanges overlapping the front, and assemble to side and rear panels, using #10 x 1/2" sheet metal screws.

Attach the lighting instructions and rating plate on the inside of the lower removable Front Panel.

Install the lower removable Front Panel (with the angle clips on the rear side near the bottom), engaging the lock clips on the right and left side panels. The turned-down edge on the top of the rear side of the panel locks with the turned-up edge of the drafthood baffle. Remove jacket supports.

AFTER JACKET IS INSTALLED,
COMPLETE THE BOILER INSTALLATION
AS FOLLOWS:

GAS PIPING: Install piping from meter per schedule and drawing, Page 12. Piping from main to gas valve runs through hole in left side panel of deluxe jacket.

Pipe size from main to gas valve is per SIZE, TEE TO VALVE table, Page 12.

All pipe joints must be made using joint compound resistant to L. P. Gases.

GAS PIPE DELIVERY SCHEDULE: Maximum Capacity of Pipe in Cubic Feet of Gas per Hour for Gas Pressure of 0.5 Psig or less and a Pressure Drop of 0.3 Inch Water Column Based on a 0.60 Specific Gravity Gas.

Nominal Iron Pipe Size, Inches	Length of Pipe, Feet									
	10	20	30	40	50	60	70	80	90	100
.500	132	92	73	63	56	50	46	43	40	38
.750	278	190	152	130	115	105	96	90	84	79
1.000	520	350	285	245	215	195	180	170	160	150
1.250	1,050	730	590	500	440	400	370	350	320	305
1.500	1,600	1,100	890	760	670	610	560	530	490	460
2.000	3,050	2,100	1,650	1,450	1,270	1,150	1,050	990	930	870

PIPE SIZE, MAIN TEE TO GAS VALVE (Size of gas valve inlet)		
Boiler Number	Natural Gas	Propane
G-23	1/2	1/2
G-24	1/2	1/2
G-25	1/2	1/2
G-26	1/2	1/2
G-27	1/2	1/2
G-28	3/4	1/2
G-29	3/4	1/2
G-210	3/4	1/2
G-211	3/4	1/2

NOTE: PIPE AND FITTINGS SHOWN ABOVE NOT SUPPLIED WITH BOILER

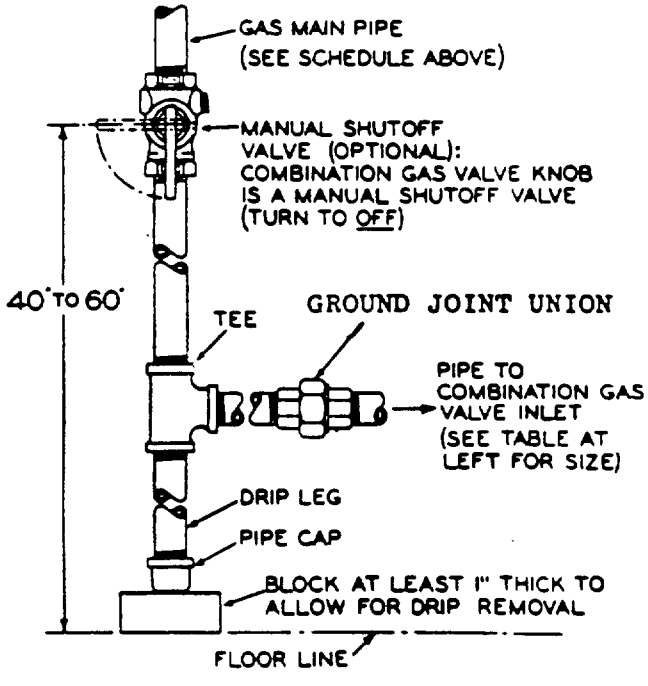

02196

CONNECT PILOTS:

24 Volt Systems: Connect pilot tubing and thermocouple to combination gas valve.

Self Energizing (S. E.) Systems: Connect pilot tubing and pilot generator wires to combination gas valve.

Combination gas valves are internally vented: A pilot vent tube is not used.

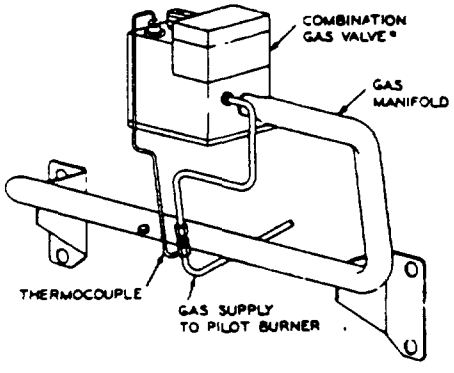

ASSEMBLY OF COMBINATION GAS VALVE* AND MANIFOLD - 24 VOLT SYSTEM

24 volt power for valve operation is supplied by power line through a 24 volt transformer.

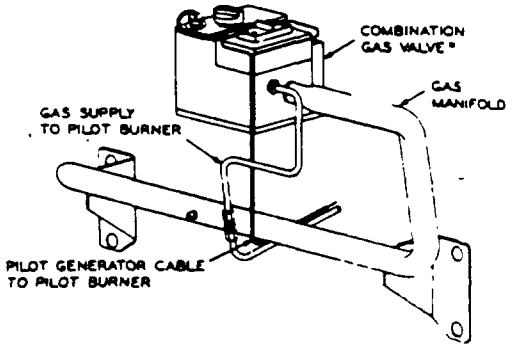

ASSEMBLY OF COMBINATION GAS VALVE* AND MANIFOLD - SELF ENERGIZING (S. E.) SYSTEM

Millivolt power for valve operation is supplied by the pilot generator.

*COMBINATION GAS VALVE (FIVE-FUNCTION VALVE): A pilot safety valve, pressure regulator, ** main manual and pilot shutoff valve and automatic gas valve, combined in one.

**The pressure regulator is not used for PROPANE gas (the regulator is installed outside the Boiler)

PIPE STEAM OR WATER SYSTEM TO BOILER. See following pages.

NOTE: Draft diverter and vent to chimney (See Page 17), and steam or water pipe must be so arranged that there is no interference between vents and piping.

PIPING WATER BOILERS (See drawings and tables, page 15 and below)

Gravity Circulation Systems

A new boiler is usually installed as a replacement in an existing gravity piping system: connect supply and return mains to boiler as for boiler being replaced. See table below for pipe sizing connections. Use TWO returns, as suggested in table, for G-208 and larger. If existing expansion tank is not serviceable, install compression tank (diaphragm or non-diaphragm) per drawings, Page 15.

Forced Circulation Systems

Residential boilers often have the circulator (pump) on the boiler return (see page 1) or the pump may be on the supply (pumping away from the boiler). Either position is satisfactory for normal residential use. WHEN HIGH HEAD PUMPS are used, or when RADIATORS SEVERAL STORIES ABOVE THE BOILER are served, the pump(s) should be installed on the supply: this will keep piping presized and will prevent excessive pressure change in the boiler itself. See Page 15 for pump and compression tank locations and suggestions. Pipe sizes for normal design conditions are shown below.

Boiler Size	Gravity Circulation Pipe Size - Inches		FORCED HOT WATER FLOW RATES AND PIPE SIZES FOR STANDARD CONDITIONS	
	Supply Main	Return Main	Approximate Flow Rate @ 20 F. drop, to deliver boiler heat output	Supply & Return Pipe Diameter to obtain flow rate shown, at normal water velocity
G-23	2	2	5 GPM	3/4"
G-24	2	2	7 GPM	1"
G-25	2	2	10 GPM	1"
G-26	2	2	12 GPM	1 1/4"
G-27	2	2	15 GPM	1 1/4"
G-28	3	*(2)-2	17 GPM	1 1/2"
G-29	3	*(2)-2	19 GPM	1 1/2"
G-210	3	*(2)-2	22 GPM	1 1/2"
G-211	3	*(2)-2	24 GPM	2"

*one return on left end, one on right end of boiler

PIPING WATER BOILERS

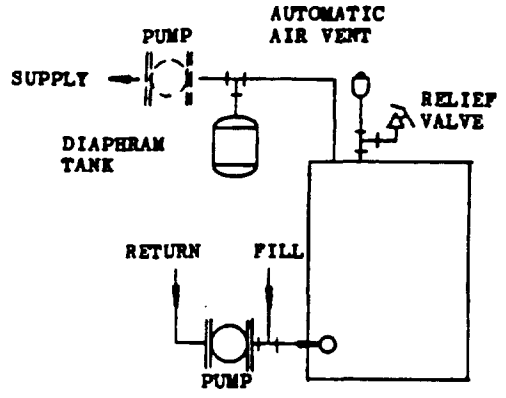

Systems using diaphragm compression tank

1. Locate tank near boiler as illustrated (locate on suction side of pump, if pump is mounted on supply main).
2. Use second or larger diaphragm tank to control expansion of water in large piping system. DO NOT ADD A NON-DIAPHRAGM TANK.
3. A functioning automatic air vent is required. Install as shown, to vent air off top of boiler at Eliminaire. External air control devices are not needed.
4. If bypass piping is used, add automatic air vents in piping system as needed; pump should be mounted in supply main.

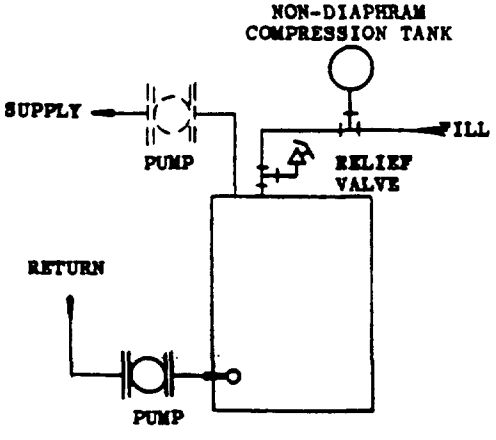

Systems using non-diaphragm tank

1. Locate tank above boiler as shown. A second tank at the same level, connected to the SINGLE pipe to the boiler, may be added (if needed) to control expansion of water in a large piping system.*
2. USE NO AUTOMATIC AIR VENTS with non-diaphragm tank system. All air in the system after initial venting collects in the tank, to control expansion of water.
3. Avoid piping systems which bypass water around the boiler, when non-diaphragm tanks are used: for reliable operation, air must return to the tank and must not be lost through valve packings, etc.

*If more tank capacity is needed, a DIAPHRAGM tank can be added, preferably at pump inlet (suction). TANK STEM MUST BE UP, as illustrated, top left. Air must collect in the non-diaphragm tank, only. The system remains NON-DIAPHRAGM: use no automatic air vents.

MINIMUM RECOMMENDED
STEAM PIPING SIZES

BOILER	PIPE DIAMETER-INCHES		
	HORIZONTAL OUTLET AND RISER	RETURN	EQUAL-IZING LOOP
G-23 G-24	1 1/2	1	1 1/2
G-25 G-26	2	1	1 1/2
G-27	2 1/2	1	1 1/2
G-28 G-29 G-210 G-211	3	1 1/4	1 1/2

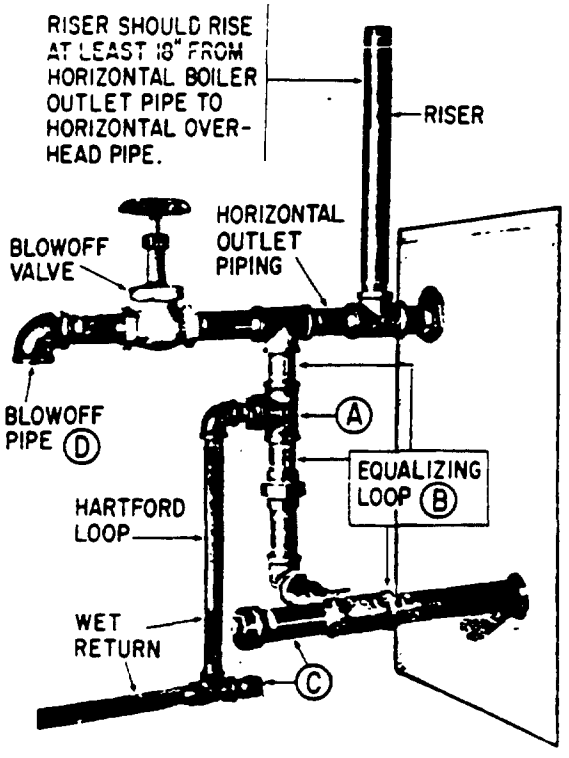

RECOMMENDED PIPING FOR G-23 or G-24 ILLUSTRATED.

NOTE: Larger pipe sizes may be used, if desired. Also see Note (C), below.

(A) The center of the Hartford loop tee should be 2" below the normal water line of the boiler, or 21" above a level floor under the boiler.

(B) The pipe connecting the horizontal steam outlet to the boiler return tapping is usually called the equalizing loop. The portion of the loop under the Hartford tee A is full of water and is sometimes considered part of the wet return; boiler performance will not be affected if this piping (below A) is the same size as the wet return. However, small diameter pipe will more quickly fill with sediment than larger pipe -- see C below.

(C) Tees with nipples and caps (rather than elbows) are illustrated and recommended to allow easy cleaning of the wet return and boiler return horizontal pipes. These pipes (and the bottom of the boiler) collect all scale and sediment from the system. Capped nipples are easier to remove than plugs.

(D) Refer to CLEANING STEAM BOILERS in this boiler manual, for recommendations, blowoff, flushing, etc. Blowoff valve and piping should be a minimum of 1 1/4" diameter. Once the system has been thoroughly cleaned, the blowoff valve may be left in place; or it may be removed and the outlet pipe capped or plugged.

INSTALL DRAFT DIVERTER

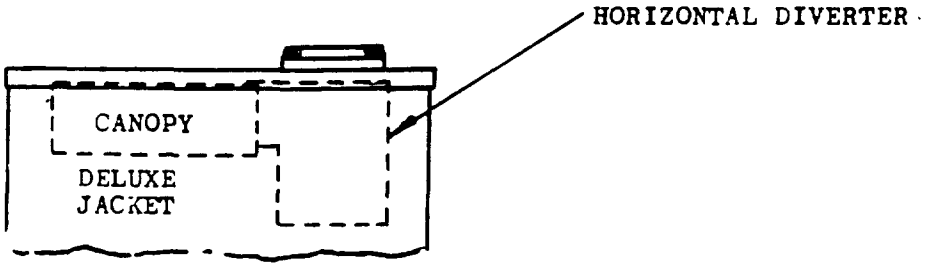

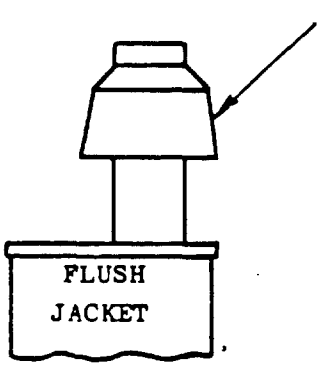

Slide diverter over collar above jacket, and secure with screws

VENT DIVERTER TO CHIMNEY, using vent pipe the full diameter of diverter outlet. Follow recommendations of American Nation Standard Z21.30. Refer to Z21.30 if other appliances are vented to the same chimney.

NOTE: 1. Vent pipe must not project past inside diameter of chimney.

2. Horizontal pipe should be short (boiler near chimney) and should pitch up toward chimney at least 1/4" per foot.

INSTALL CONTROLS

Boilers may be ordered for use with many different control types and control systems. Only the most frequently used controls and control systems can be described in this manual. See following pages.

Wiring diagrams, basic, steam and water, are shown on pages 19, 20 and 21. It is suggested that the installer MARK THE DIAGRAM USED, at the time of installation. If the system design requires a special wiring diagram, a copy of the diagram used should be attached to this manual for later reference.

GENERAL RECOMMENDATIONS - CONTROLS

STEAM BOILERS (See Pages 1, 3, 16, and below):

Install gauge glass and low water cutoff with high limit (pressure) control, pressure gauge and pop safety valve, on tappings and in positions shown. Pop safety valve may also be installed on highest point on steam header, at boiler.

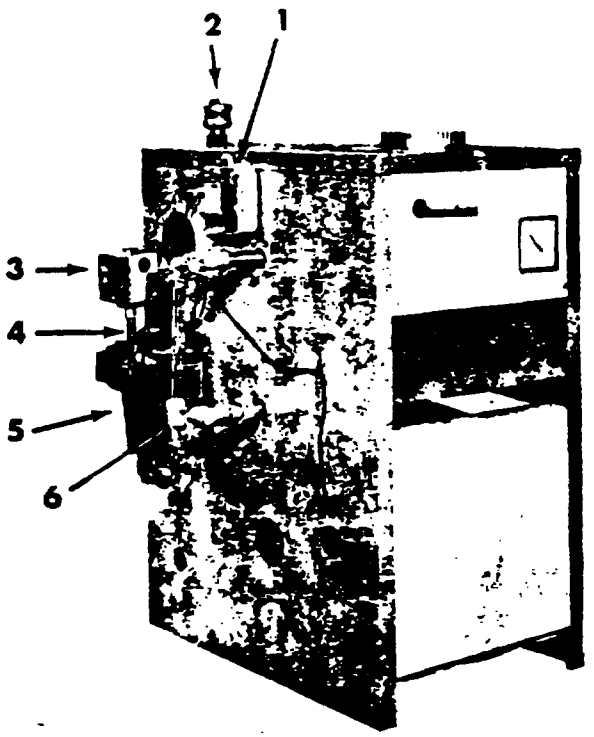

1. 24 volt transformer and junction box
2. Pop safety valve
3. Pressure high limit control
4. Syphon connection
5. Low water cutoff
6. Gauge glass assembly

WATER BOILERS (See Pages 1, 3, and 19):
Install High Limit or Combination Control, other limit controls (if used), temperature-altitude gauge and relief valve in positions shown or suggested.

WATER OR STEAM BOILERS:

If a pressure limit control is specified IN ADDITION TO the basic controls, that control should be installed on or near the top of the boiler. A syphon connection should be used. See Tappings A (Page 3)

FIELD WIRING:

A length of listed low voltage cable is supplied for wiring AT THE BOILER of 24 volt or self-energizing circuits. Low voltage wiring from boiler to remote thermostat, zone valves, etc., and all line voltage wiring should follow the National Electric Code and local codes or special codes that may apply, using specified wire types (not supplied).

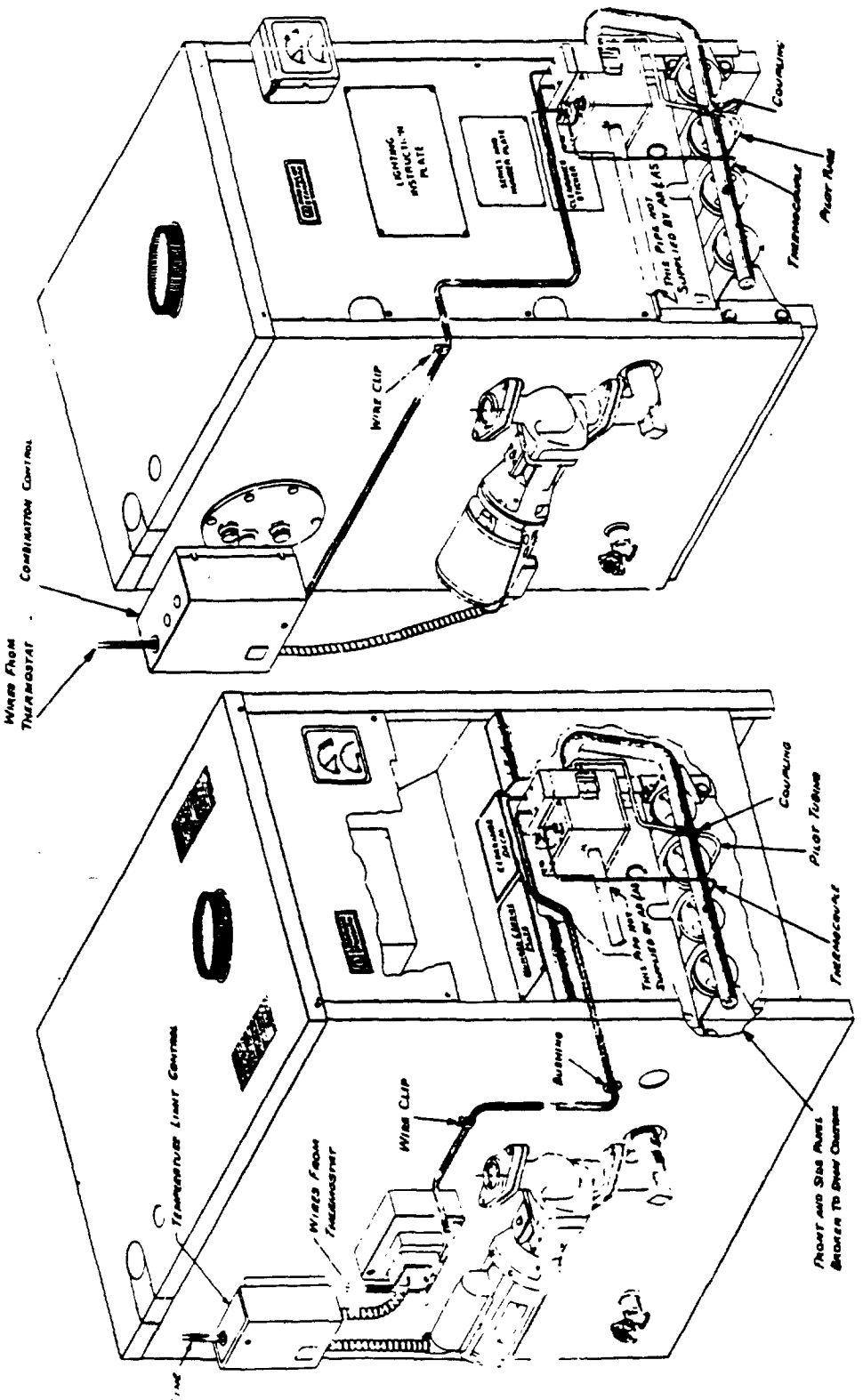

FIG. 1 - WATER BOILER WITH DELUXE JACKET

FIG. 2 - WATER BOILER WITH FLUSH JACKET

See Page 18 for typical steam boiler

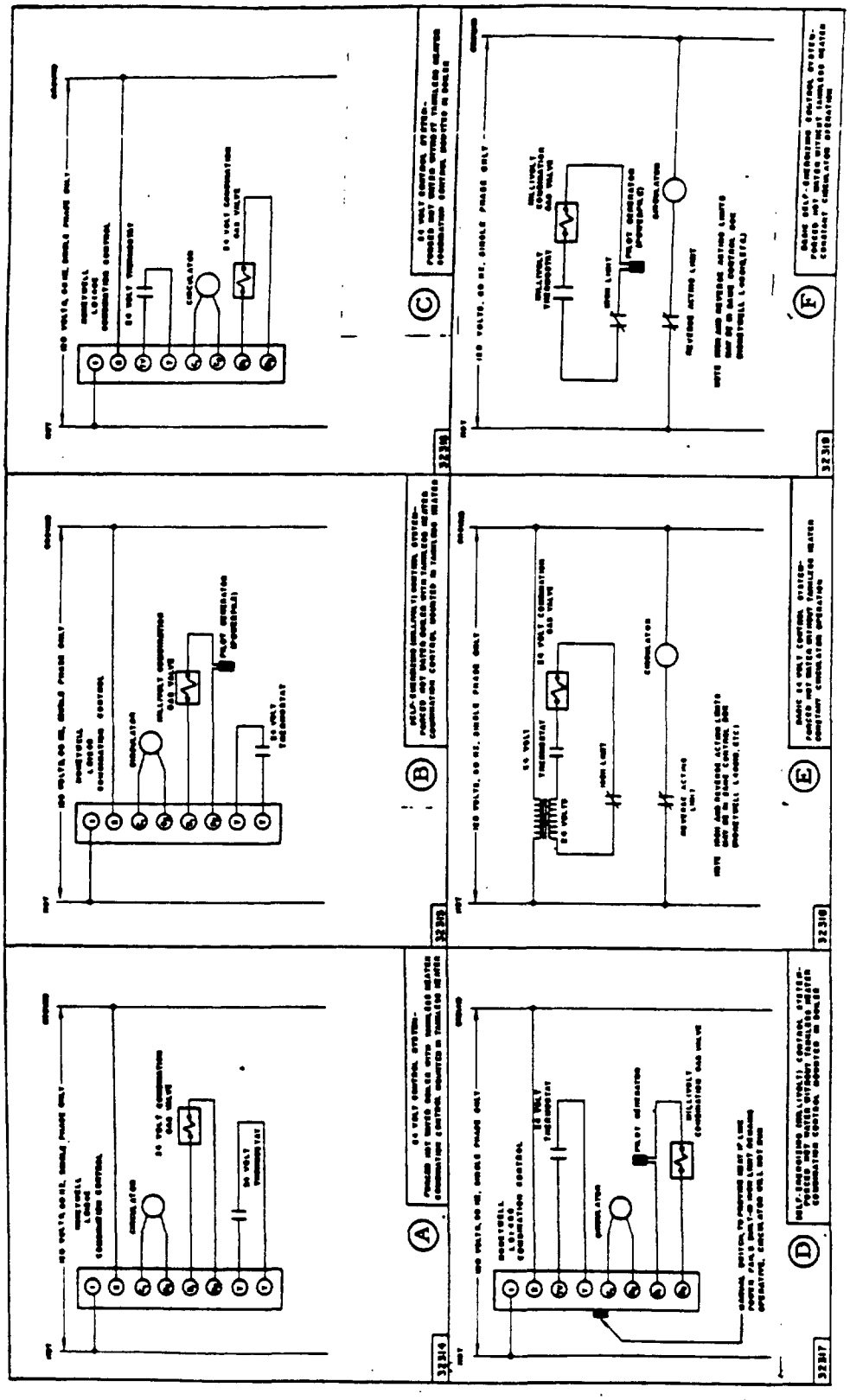

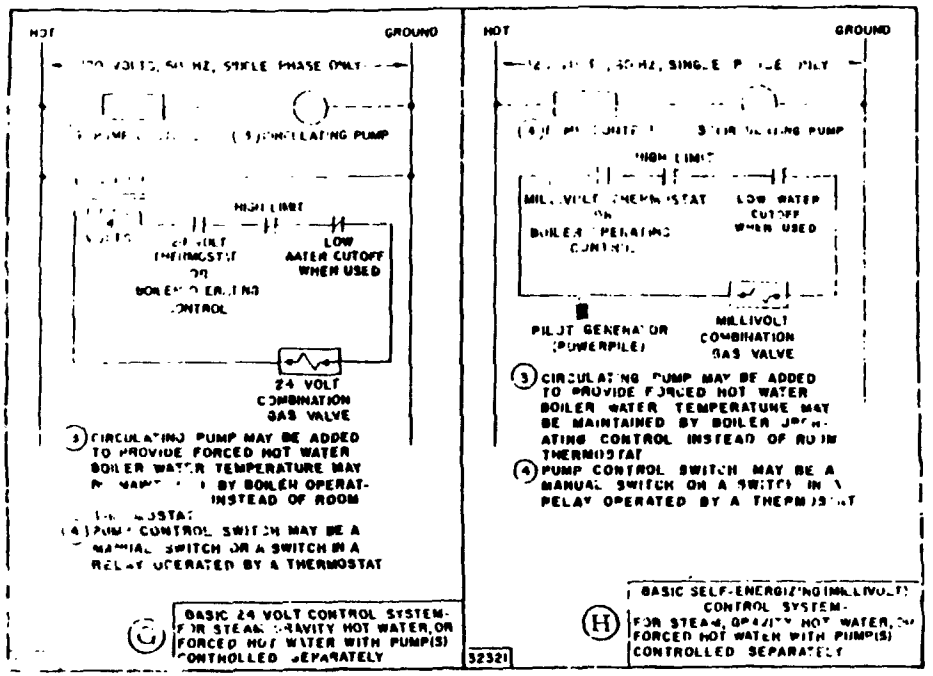

NOTE: WIRING DIAGRAMS (A) through (H)

1. Combination Controls, tankless heater

Diagrams (A) and (B) show Honeywell L9124 Combustion Control (in-line High Limit, and low-reverse acting limit "Triple Aquastat", transformer and pump relay). L9124E is for 24V gas valves ONLY. L9124B is for self energizing gas valves ONLY.

2. Combination Controls, no tankless heater

Diagrams (C) and (D) show Honeywell L-8148 Combination Control (High Limit, transformer and pump relay).
L-8148E is for 24 V gas valve (G) only.
L-8148G is for self-energizing gas valve (H) ONLY.

G-2 boilers for forced circulation, intermittent circulator operation, may be ordered with L9124 Control (with tankless heater) or L-8148 Control (no tankless heater).

3. Combination Aquastat, constant forced circulation, no tankless heater: Diagrams (E) and (F) show circuits for 24 volt and for self-energizing gas valve. Boilers may be ordered with Honeywell L4081B Aquastat (High limit and reverse acting control); or separate high limit and reverse acting aquastats can be used.

4. Steam boilers are wired per Diagram (G) (24V gas valve) or (H) (self energizing gas valve). The circulating pump circuits (dotted lines) are ignored.

5. Boilers for gravity hot water may be used per Diagram (C) (24 volt gas valve) or (H) (self-energizing gas valve)-ignore dotted line pump circuit and Low Water Cutoff.

6. G-2 Boilers for forced circulation hot water may be equipped with controls and wired per (G) or (H) (use pump circuit shown; ignore Low Water Cutoff) or Diagram (A) through (F). These six diagrams cover all basic forced hot water control circuits normally used. For further suggestions, including zoning with zone valves and with circulators, see WIRING DIAGRAM MANUAL available from American Standard, Inc. representatives. The controls used (when not supplied by American Standard, Inc.) and the control system as field wired, are the responsibility of the installer: comply with all codes. MARK THE ACTUAL WIRING DIAGRAM USED, AND MAKE IT A PART OF THIS MANUAL.

AIR FOR COMBUSTION AND VENTILATION

Air must be supplied to the boiler area at a rate to give satisfactory combustion and venting, and enough ventilation to keep surrounding air temperature within safe limits. The following MINIMUM recommendations to meet AVERAGE conditions are based upon American National Standards Z21.30, Installation of Gas Appliances and Gas Piping.

The boiler (and other appliances, such as a gas fired water heater) will probably be installed in one of the three general locations described below. It must be understood that the total amount of air required by appliances, for combustion and ventilation, is THE SAME for all three locations. The differences shown in the minimum size of air openings in the boiler room walls is due to the effect of air infiltration into LARGE rooms, through cracks around doors and windows, etc. ALL AIR FOR COMBUSTION MUST COME FROM OUTSIDE. Buildings tightly sealed and weatherstripped allow least infiltration. In such buildings, positive openings from the boiler room direct to the outside are recommended.

1. BOILER IN LARGE OPEN ROOM (basement without partitions, etc.):
   Normal air infiltration MAY provide enough air for combustion and ventilation. If the large open room is weatherstripped and sealed from other large rooms by tight doors and windows, a permanent opening or openings direct to outside must be provided. Opening(s) must have a minimum of one square inch free area* per 5000 Btuh input to ALL appliances in the large room.
2. BOILER IN CONFINED SPACE WITHIN A LARGER ROOM (utility room, closet, etc.) See Page 4 - UTILITY ROOM:
   Two openings to the larger room are required, each opening of one square inch (minimum) net free area* per 1000 Btuh input to all appliances in the confined space, with 100 square inches per opening a minimum.
3. BOILER IN CONFINED SPACE, NOT OPEN TO LARGER ROOM (closed small boiler room in a basement or laundry room, etc.):
   Provide two openings direct to outside, one within 12" of the ceiling, and one within 12" of the floor, EACH opening with minimum net free area* of one square inch per 4000 Btuh input to all appliances in the room.

   If the room is not on an outside wall, ducts must be run to outside wall openings: OUTSIDE OPENINGS MUST BE DOUBLED to one square inch per 2000 Btuh to all appliances in the room. Ducts must be full size of openings.

   In a basement below grade, the opening for air supply should be ducted to within 12" of the floor. The second opening provides ventilation at the ceiling.

*Net free area is always less than total area, if grilles or screens are used (DO NOT USE fine mesh screen). When metal grilles or large mesh screen is used, add 50% to the net free area calculated. If wooden grilles are used, add 150% to net free area calculated.

EXAMPLES:

Boiler and other gas appliance in confined space, not open to larger room.
Total input to both appliances is 175,000 Btuh. Metal grilles over openings will be used.

(1) Net free area, EACH opening = 175,000/4,000 = 44 sq. in. Actual grilled opening should be 44 x 150% = 66 sq. in. Two 8" x 10" openings direct through an outside wall will meet minimum requirements.

(2) IF ROOM IS INTERIOR, DUCTS MUST BE RUN TO OUTSIDE WALL. Net free area and actual area of each opening must be doubled: 132 sq. in. actual area of each duct and outside opening with metal grille must be provided. Ducts and openings 12" x 12" or 8" x 18" would provide this area.

TAKE PRECAUTIONS AGAINST BLOCKING AIR OPENINGS with snow, d

FILLING SYSTEM (do not fire boiler until filled)

STEAM SYSTEMS:

Fill to approximately half way up the gauge glass. During normal operation, SLOWLY add any necessary makeup water. Cleaning is recommended after first filling: see CLEANING STEAM SYSTEMS, Page 27.

WATER SYSTEMS:

(a) Existing open-expansion-tank (tank at high elevation) systems - Fill system, to fill expansion tank 1/3 full. Set Boiler pressure gauge stationary indicator under movable indicator at this indicated pressure.

(b) Standard closed hot water systems - Fill entire system with water; vent or purge air according to the air control system installed. Add water to obtain desired gauge pressure for the system design. Set boiler pressure gauge stationary indicator to that design pressure.

CAUTION: After steam or water system is filled, the boiler should be fired and the system vented to remove oxygen from the fresh water.

CHECK BEFORE STARTING (Gas valve knob in OFF position):

Do not turn main gas valve knob to ON or place system in automatic operation until these items are checked:

1. Is boiler or system filled with water?
2. Is all wiring completed, per the wiring diagram that applies?
3. Is the draft diverter piped to the chimney? Is the chimney unobstructed?
4. Is air for combustion and ventilation provided for?
5. Has all combustible material been removed from the area?
6. If boiler is on a wooden floor, has floor shield been installed?

SHUTOFF AND LIGHTING INSTRUCTIONS: See printed lighting instructions plate on boiler and on Page 13.

MAIN MANIFOLD, PILOT PRESSURE, AND PILOT FLAME ADJUSTMENT

MAIN MANIFOLD - PRESSURE AND INPUT ADJUSTMENT

1. Fire boiler for approximately 15 min. or until at operating temperature or pressure.

2. Shut off gas to all other appliances from the gas meter serving the boiler.

3. Read the rated input in Btuh on the boiler rating plate. Adjust gas pressure regulator to obtain that input, as follows. Rated input is normally obtained at a pressure of 3-1/2 inches of water (natural gas) or 11 inches (Propane) measured at the 1/8" tapping on the manifold. *

INPUT, BTUH = CU. FT. IN 3 MIN. (on gas meter)
X 20 = BTU/CU. FT. OF GAS USED

FOR NATURAL GAS OF 1000 BTU/CU. FT.:
INPUT, BTUH = CU. FT. (Meter) in 3 MIN X 20,000

FOR PROPANE OF 2500 BTU/CU. FT.:
INPUT, BTUH = CU. FT. (Meter) in 3 MIN X 50,000

TO ADJUST PRESSURE:

NATURAL GAS - Adjust regulator in combination gas valve. See instructions furnished with valve.

PROPANE GAS - Adjust regulator on gas line external to boiler room.

*NOTE: If pressure considerably different from normal is required, larger or smaller burner orifices should be used.

PILOT FLAME ADJUSTMENT

Normally, no pilot gas pressure adjustment is required to obtain proper pilot flame. Pilot gas pressure can be adjusted at the combination gas valve. Normal input to each pilot is approximately 1000 to 1500 Btuh.

MAIN BURNER AIR ADJUSTMENT

DRILLED PORT burners are normally used with natural gas. To adjust the air setting, allow 5 minutes for the burners to heat up; open the air shutter until the flame lifts off the burner (too much air), then close until the flame returns to the burner. There should be no yellow in the flame. (Orange appearance is caused by lint and dust particles in air and does not affect normal performance).

RIBBON BURNERS

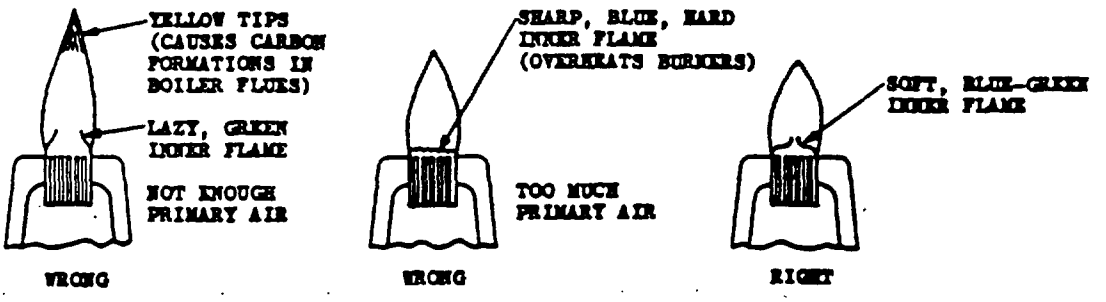

RIBBON BURNERS - NATURAL GAS
Adjust air shutter to give sharp blue flame with no yellow. For natural gas, good performance is usually obtained with air shutter set to maximum open position.

RIBBON BURNERS - PROPANE GAS
Burner flames must be adjusted properly to prevent excessive burner temperatures. Adjust the air shutter to a blue-green inner flame without yellow in flame. (See illustrations).

CARE AND MAINTENANCE - ANNUAL

THE BOILER AND SYSTEM SHOULD BE INSPECTED AT LEAST ONCE EACH YEAR BY A COMPETENT SERVICEMAN TO INSURE CONTINUED RELIABLE, SAFE OPERATION.

1. CHECK FLUEWAYS, BURNERS AND PILOT for normal combustion and proper alignment. Clean heating surfaces, ports and orifices, if coated or plugged. See following PROCEDURE-INSPECTION & CLEANING section.

2. CHECK CONTROLS AND CONTROL SYSTEMS for proper settings, operation of safety controls, and operation of the complete automatic control system.

3. AIR SUPPLY AND VENTING OF FLUE GAS: Make sure of ample supply of air for combustion and ventilation and complete venting of flue gas. Visually inspect air supply openings and chimney for obstructions.

4. PIPING SYSTEM: Check water or steam piping and gas piping for leaks. Check and service such auxiliary equipment as circulating pumps, control valves, etc.

5. HOT WATER SYSTEM: Check for proper system pressure and control of air.

6. STEAM SYSTEM: Blow down and check low water cutoff; check pop safety valve. Drain off any accumulated sludge, and refill to proper level. Do not drain more water than necessary. Fire boiler to remove oxygen, if fresh water is added.

7. RECHECK GAS INPUT AND BURNER AND PILOT ADJUSTMENT. (See Page 24)

MAINTENANCE DURING OPERATION

1. Check water level or pressure regularly. Add water (slowly) as needed. If water must be added frequently, call a competent serviceman for advice and service.

2. STEAM BOILERS: At least once a month, check the Pop safety valve and low water cutoff. With steam pressure on the boiler POP SAFETY VALVE: Fasten long wire or cord to handle, and (from a safe distance) pull the handle to release steam. If valve does not release steam, shut off all gas and call for service.

LOW WATER CUTOFF: Blow sludge from body of cutoff, as covered in instructions furnished with cutoff used. See Page 28 for checking operation of cutoff.

MISCELLANEOUS-IMPORTANT

1. Do not drain water from either steam or water systems except to remove sludge, or if there is danger of freezing (long unfired periods during winter), or to perform service. See caution, inside back cover.

2. If fresh water is added, especially complete filling of an empty system, the boiler should be fired immediately to heat the water and drive corrosive oxygen and other gases from the fresh water. Vent and add water as needed.

3. Save all instruction sheets furnished with controls and accessories. Follow these instructions. Keep copies of any special wiring or piping diagrams for the installed heating system, for ready reference.

PROCEDURE FOR INSPECTING AND CLEANING BOILER

For maximum efficiency and safe operation, burners and boiler flue passages should be inspected at least once a year, and cleaned if necessary.

Inspection Procedure:

1. Turn knob on combination gas valve to OFF.

2. Remove lower front jacket panel (deluxe jacket) from boiler.

3. Remove burner access door.

4. Remove burners, lift at the rear, rotate and drop rear between supports, slide toward the back of the boiler until free of the spuds, and remove from beneath the manifold (disconnect pilot gas tubing as necessary).

5. Check burner gas ports or ribbons for lint and dirt.

6. Section cleanliness can be checked with mirror and light inserted in the opening where the burners have been removed.

BURNER CLEANING

If burner inspection reveals rust, scale or lint is present, clean as follows:

1. Drilled Port Burner Pass a drill of same size as port diameter through the ports, and shake any dislodged material out through the mixing tube.

2. Ribbon Burner Remove ribbon hold down clamps and then remove ribbons. Separate ribbons by fanning out, and clean with wire brush. Reassemble to burner.

SECTION CLEANING

If section inspection reveals soot or scale, clean as follows:

1. IMPORTANT - BE SURE BURNERS ARE OUT OF BOILER BEFORE PROCEEDING.
2. Remove jacket top and canopy.
3. Clean sections with a wire flue brush.
4. Reassemble, carefully locating all parts.
5. Install burners and connect pilot.
6. Follow startup and adjustment procedures given in this manual.

CLEANING STEAM SYSTEMS (Refer to pictures, Pages 16 and 18).

The grease used to lubricate the cutting tools during erection of a new piping system (or a new boiler on an existing piping system) serves as a carrier for dirt, with the result that a scum of fine particles and grease accumulates on the surface of the water in all new boilers, while heavier dislodged particles settle to the bottom of the boiler.* These impurities tend to cause foaming, prevent the generation of steam, and cause an unsteady water line. This unavoidable accumulation of oil, grease and sediment should be removed by blowing off and cleaning the boiler as follows: install blowoff pipe with valve of at least 1-1/4 inch nominal pipe size, with outlet extended to within 18 inches of the floor, or to drain (see Page 16). Bring boiler water line to center of horizontal outlet pipe, raise steam pressure and, while burners are operating, open blowoff valve. When pressure drops, close valve and repeat process, adding water at intervals, to maintain proper level. As a final operation, close blowoff valve, bring the pressure in the boiler to about 10 lbs., close main gas valve, and open boiler drain valve to flush out sediment. After boiler has cooled, fill and flush out boiler several times, before filling to proper water level for normal service. Fire boiler with final fill of water, to drive out oxygen.

*See CAUTION, inside back cover.

LOW WATER CUTOFF-SERVICEABILITY CHECK

CAUTION: An operating Low Water Cutoff is vital to protect the boiler against being fired dry.

After boiler has been cleaned, a check should be made of the Low Water Cutoff as follows. NOTE: Combination gas valve has built-in delay in opening and closing.

1. Light pilot as indicated in Lighting Instructions. Turn thermostat or operating control to highest temperature. Automatic gas valve should open and main burners light.

2. Open boiler drain cock, and drain water until water level is below center line of Low Water Cutoff. Automatic gas valve should close, as Cutoff switch opens.

3. Refill until water level is above centerline of Low Water Cutoff. Automatic gas valve should open, as cutoff switch closes.

4. See MAINTENANCE DURING OPERATION section, Page 26, for cleaning and maintenance of cutoff.

CAUTION TO INSTALLERS AND OWNERS

The heat transfer surface of this boiler has been carefully designed to give optimum performance and reliability. However, the presence of contaminants such as scale or lime, sediment and boiler sealing compounds in the section waterways may cause premature failure of the sections.

If leaks occur in the system and are undetected or neglected, fresh water replaces the water lost through the leaks. Nearly all water contains dissolved minerals ("lime"). As water is heated in the boiler, the minerals are deposited, mostly at the bottom of the sections directly above the fire. No appreciable amount of lime is deposited in a system with no leaks; but when water is hard and makeup water must be added frequently and in large amounts, boiler waterways may be coated with a thick layer of lime within days or a few weeks of operation. Lime is an insulator, which causes overheating of boiler metal if deposition of lime is not halted, the boiler will fail. To stop lime deposition, stop system leaks.

Leaks may occur occasionally in any system. These leaks are usually of such a nature that they can be prevented or corrected by good workmanship. Every effort should be made to correct them without the use of boiler sealing compounds. If compounds are used, they should be used as sparingly as possible, and never in excess of manufacturers recommendations. Following use, the boiler must be flushed out thoroughly, or serious damage is likely to result.

Sediment which may accumulate in the boiler should be flushed out in accordance with recommended maintenance practices. Excessive use of water should be avoided because of the danger of lime and corrosion buildup.

Glycol anti-freeze is sometimes added to system water to protect against freezup. Although American Standard can not recommend this practice, we realize that glycol anti-freeze will occasionally be used. Heat transfer through glycol is poorer than through water: use no more than 50 percent glycol in the system. With any proportion of glycol, radiator output will be lower than with pure water at the same temperature.
It is always better, when possible, to drain the system rather than add anti-freeze; neither the heating system nor plumbing system water will freeze so long as the heating system continues to operate; and the plumbing system is not protected against freezeup when the heating system is off, whether or not the heating system contains anti-freeze.

Cast iron is highly resistant to corrosion. However, some propellants used in aerosol cans break down into poison gas and corrosive gas, at high temperatures. If aerosol mixtures are used near boilers, the aerosol will enter the boiler flame and will be heated. Continued use of aerosol cans near heating system boilers can result in severe boiler heating surface corrosion and possible danger to health.

The installer of this boiler is responsible for showing to the owner operator the location of all emergency shutoff devices, and instructing him in the use of each.