AMERICAN STANDARD

A-5

oil-fired boilers

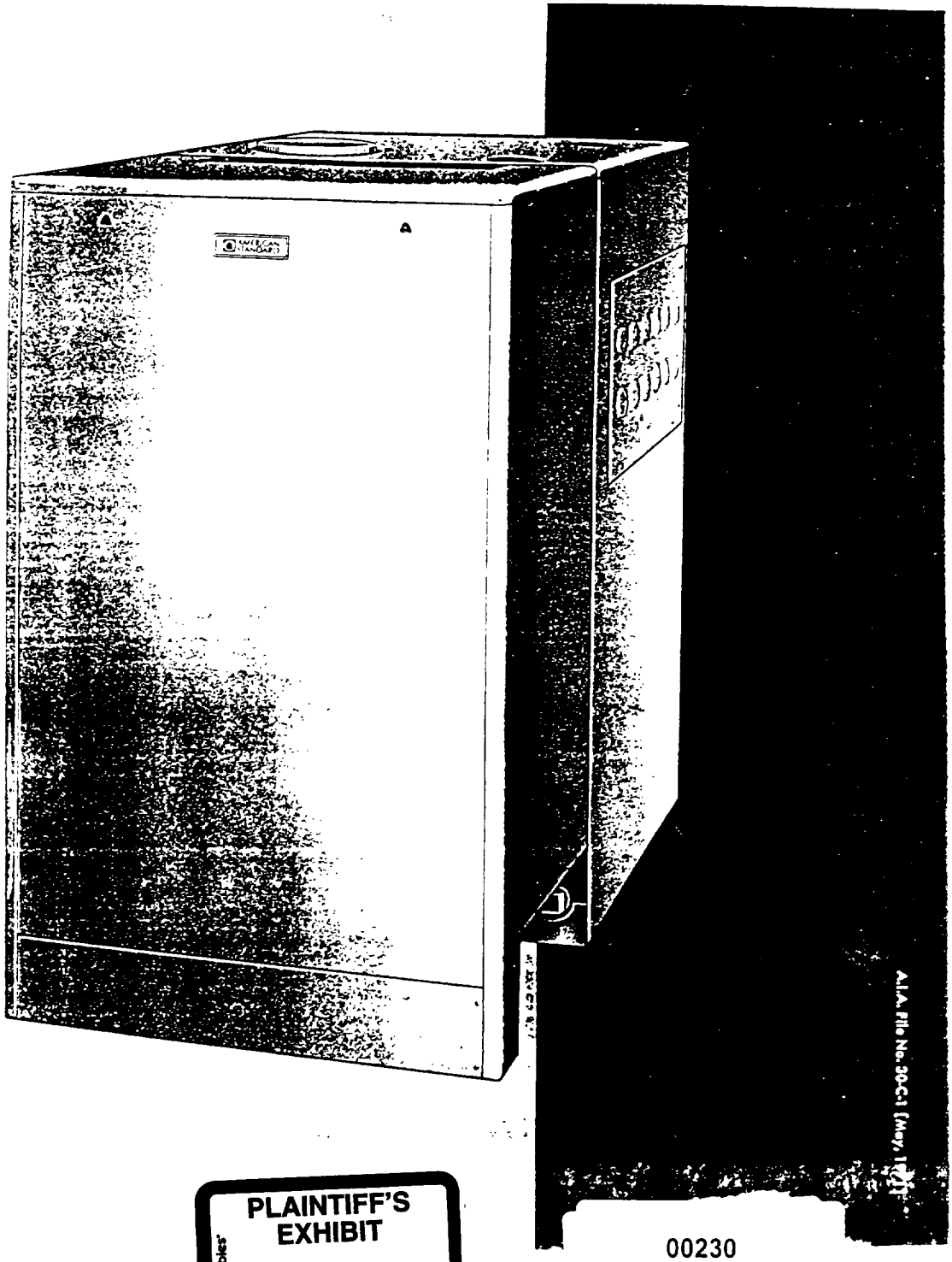

A.I.A. File No. 30-C-1 [May, 1

00230

PLAINTIFF'S EXHIBIT

ASI-276

tabbies

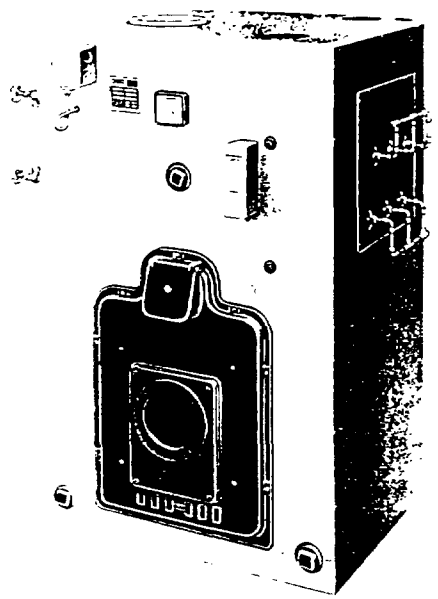

steam boiler illustrated

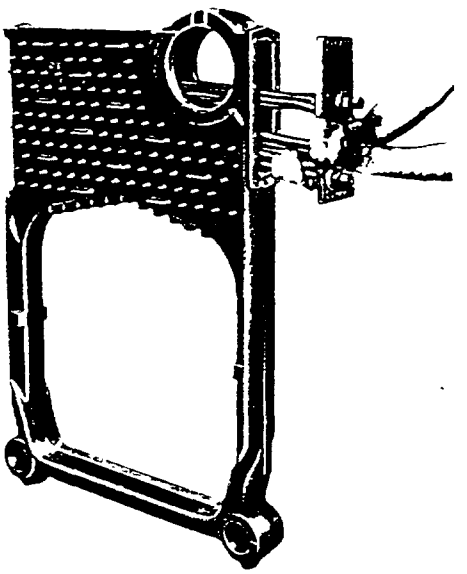

The A-5 oil-fired boiler is designed for installation in large homes and small to medium-size apartments and commercial buildings. This big performance boiler has been engineered specifically for oil operation and is available as a boiler only in a full range of eight sizes for hot water or steam application, with gross I=B=R output ratings of 261,000-830,000 Btu hr range. The A-5 is built for long-lasting efficiency and easy, low-cost installation. **Vertical flue design** reduces section weight, speeds heat circulation; unique **tankless hot water heater** adapts to meet varying domestic requirements; rugged **cast iron sections** assure long, dependable service; **wet base construction** eliminates need for special base, keeps floor cool, optional **pre-cast combustion chamber** saves on installation time.

The A-5 boiler is unmatched in its ability to meet a wide variety of domestic hot water needs. A unique tankless heater arrangement lets you match expanding domestic hot water requirements (from 4 to 16 gpm) by the insertion of extra tankless water heaters into A-5 center sections. No need to install a bigger boiler or separate water heater to handle expanding hot water requirements. A special copper manifold assembly, pre-fabricated to cut installation time and cost, connects multiple heaters in parallel. Special center sections, with heater opening, are supplied at no extra cost on all A-5 boilers specified for tankless use. This special A-5 tankless heater arrangement also permits the use of split systems to serve different domestic hot water needs. For versatility and flexibility in meeting domestic hot water needs, the A-5 is the answer.

00231

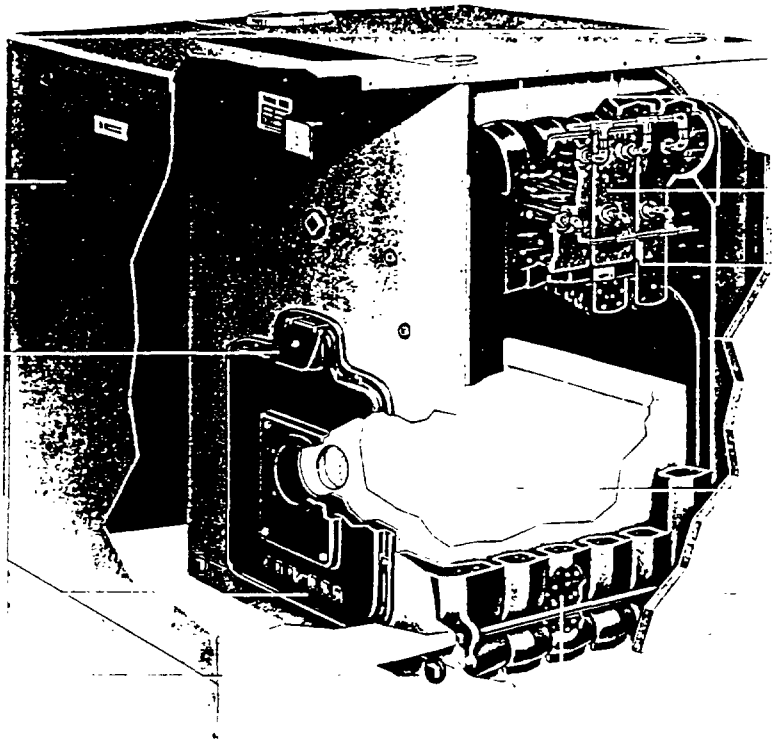

Water boiler illustrated

1– —matches jacket and has removable front panel for ready access to burner and controls; arch-type openings to provide ample air for combustion and circulation.

2– —permits convenient flame viewing; simplifies burner and control adjustment while boiler is firing. A ⅛-inch pipe tap is provided for draft test purposes.

3– —built into the front of the boiler; provides for easy accurate adjustment of secondary air.

4– —4-inch supply (top) and 2½-inch return (bottom) located in both front and back sections, eliminate need for header on largest steam assembly.

5– —aluminized steel construction permits smaller flue pipe sizes; makes A-5 readily adaptable for gas firing.

6– —internal tankless type with finned copper tubing. Unique arrangement permits flexibility in meeting domestic hot water requirements ranging from 4 to 16 gpm.

7– —connects multiple water heater in parallel and is pre-assembled for quick installation.

8– —are ruggedly constructed of cast iron and feature vertical flue design with large 7-inch top nipple port. Off-center location of nipple port speeds up circulation; projecting studs and horizontal bars extract maximum heat from combustion gases. Sections are water tested at 125 psi (2½ times rated capacity of relief valve). Accessible from left side for cleaning.

9– —heavy glass fiber insulation prevents wasteful heat loss, keeps jacket cool.

10– —high-temperature, pre-cast refractory combustion chamber—provided for all assemblies—heats quickly and evenly.

11– —smartly-styled of sturdy steel in sparkling gray finish with modern radius corners.

12– —provides extra heat-absorbing bottom surface and increased water content. Waterways completely surround combustion area, extend beneath boiler, keep floor cool.

AMERICAN STANDARD

A-5 ratings

boiler numbers		gross I=B=R output water & steam (Btu/hr)	net I=B=R ratings ■			I=B=R burner capacity (gph)	chimney		water content (gallons)	
water	steam		water (Btu/hr)	steam (sq. ft.)	steam (Btu/hr)		size (inches)	height (feet)	water boiler	steam boiler
A-504-W(T)	A-504-S(T)	261,000	227,000	816	195,800	2.55	8 x 12	15	57.7	45.6
A-505-W(T)	A-505-S(T)	346,000	300,900	1082	259,600	3.30	8 x 12	20	66.7	52.1
A-506-W(T)	A-506-S(T)	426,000	370,400	1332	319,600	4.00	12 x 12	20	75.5	59.3
A-507-W(T)	A-507-S(T)	508,000	441,700	1588	381,100	4.75	12 x 12	20	84.5	66.1
A-508-W(T)	A-508-S(T)	588,000	511,300	1838	441,100	5.55	12 x 16	25	93.4	72.9
A-509-W(T)	A-509-S(T)	668,000	580,900	2088	501,100	6.30	12 x 16	25	102.3	79.8
A-510-W(T)	A-510-S(T)	748,000	650,400	2338	561,100	7.00	12 x 16	25	111.3	86.6
A-511-W(T)	A-511-S(T)	830,000	721,700	2594	622,700	7.65	16 x 16	30	120.2	93.4

■Net I=B=R ratings shown are based on a piping and pick up allowance of 1.333 for steam and 1.15 for water. American-Standard should be consulted before selecting a boiler for installations having unusual piping and pick up requirements.

Note: "S" denotes steam; "W" denotes hot water; "T" denotes unit with tankless heater section(s).

optional control sets for A-5 boiler units

control set	control function	description
no. 1 steam	unit without domestic hot water	thermostat, Pressuretrol
no. 2 steam	unit with year-round domestic hot water, built-in tankless heater	thermostat, Pressuretrol Aquastat operating control
no. 3 gravity water	unit without domestic hot water, immersion control	thermostat, Aquastat limit control
no. 4 forced water	unit without domestic hot water	thermostat, Aquastat limit and circulator control
no. 5 forced water	unit with year-round domestic hot water, built-in tankless heater, using circulator	thermostat, Aquastat limit, reverse and operating control, circulator relay
no. 5-Z forced water	one no. 5-Z control set is required for each zone in addition to the first zone which is controlled by no. 5 control set.	thermostat, relay

sample specification for A-5

Contractor shall furnish and install, as indicated on plans, . . . oil fired boiler(s) having a firing rate of .... gph and an I=B=R gross output of ..... Btuh. Boiler(s) shall be constructed of cast iron in accordance with A.S.M.E. requirements for low pressure heating boilers and bear the A.S.M.E. symbol. Each section shall be factory tested at 2½ times maximum working pressure of 50 lbs. for water. Boiler(s) shall have I=B=R ratings. Boiler(s) shall be composed of cast iron sections with vertical flues. Manufacturers will furnish boilers with an aluminized steel canopy. Water or steam trim as required. Oil burners shall include controls as herein described. (Note: include description of controls as required and other burner features and combustion chamber as desired.)

Boiler shall be equipped with tankless heater(s) having a rating of . . . . gpm. If more than one heater is required to meet requirements a copper manifold factory assembled will be installed by the contractor as recommended by the manufacturer to connect the heater in parallel arrangement.

A-5 oil-fired boilers are designed and built to comply with the American Society of Mechanical Engineers' Code and bear their approval symbol. Ratings have been approved by the Institute of Boiler and Radiator Manufacturers.

dimensions and tappings

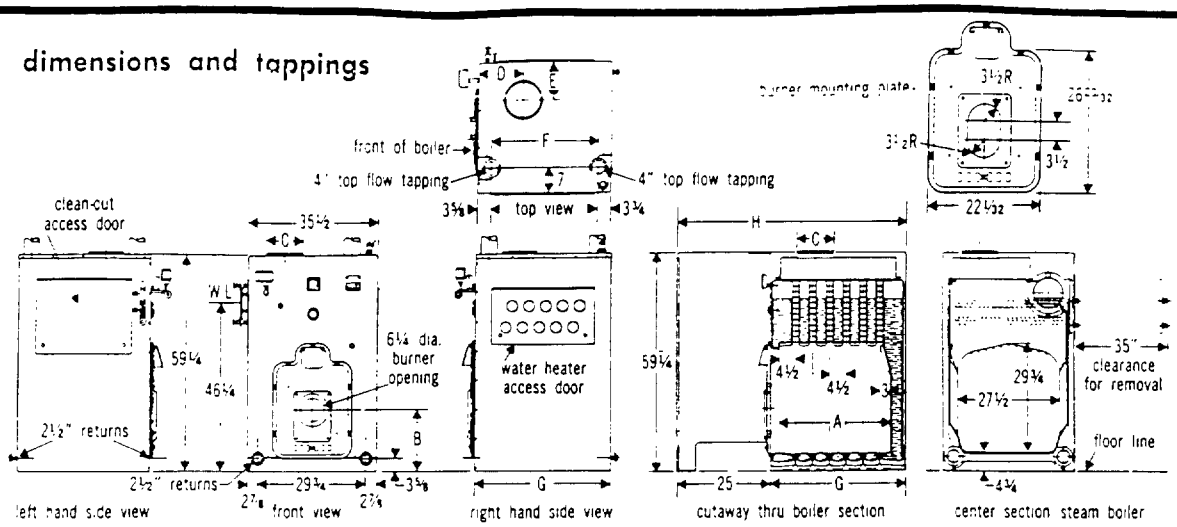

boiler number	number of sections	number and size of tappings		dimensions (inches)							
		flow (in.)	return (in.)	A	B	C	D	E	F	G flush jacket	H jacket extension
A-504	4	(2)-4	(4)-2½	16½	13¼	9	11½	9½	15½	22⅞	47⅞
A-505	5	(2)-4	(4)-2½	21	16¾	9	11½	9½	20	27⅜	52⅜
A-506	6	(2)-4	(4)-2½	25½	16¾	10	12	10	24½	31⅞	56⅞
A-507	7	(2)-4	(4)-2½	30	16¾	10	12	10	29	36⅜	61⅜
A-508	8	(2)-4	(4)-2½	34½	16¾	10	12	10	33½	40⅞	65⅞
A-509	9	(2)-4	(4)-2½	39	16¾	12	13	11	38	45⅜	70⅜
A-510	10	(2)-4	(4)-2½	43½	16¾	12	13	11	42½	49⅞	74⅞
A-511	11	(2)-4	(4)-2½	48	16¾	12	13	11	47	54⅜	79⅜

assemblage of sections

boiler number	arrangement of sections from front of boiler (with tankless heater opening)											arrangement of sections from front of boiler (less tankless heater opening)										
	1	2	3	4	5	6	7	8	9	10	11	1	2	3	4	5	6	7	8	9	10	11
A-504	FX	CT	CT	BX	—	—	—	—	—	—	—	FX	C	C	BX	—	—	—	—	—	—	—
A-505	FX	CT	CT	CT	BX	—	—	—	—	—	—	FX	C	C	C	BX	—	—	—	—	—	—
A-506	FX	CT	CT	CT	C	BX	—	—	—	—	—	FX	C	C	C	C	BX	—	—	—	—	—
A-507	FX	CT	CT	CT	C	C	BX	—	—	—	—	FX	C	C	C	C	C	BX	—	—	—	—
A-508	FX	CT	CT	CT	C	C	C	BX	—	—	—	FX	C	C	C	C	C	C	BX	—	—	—
A-509	FX	CT	CT	CT	CT	C	C	C	BX	—	—	FX	C	C	C	C	C	C	C	BX	—	—
A-510	FX	CT	CT	CT	CT	C	C	C	C	BX	—	FX	C	C	C	C	C	C	C	C	BX	—
A-511	FX	CT	CT	CT	CT	C	C	C	C	C	BX	FX	C	C	C	C	C	C	C	C	C	BX

FX—front connecting section
CT—center section with tankless heater opening
C —center section without tankless heater opening
BX—back connecting section

control tappings

location on boiler	size (inches)	control used	
		steam	water
F	2½	low water cut-off	not used
G	¾	pressure limit control	temperature limit control
H	¾	operating control, tankless heater	not used
J	½	pressure gauge	combination altitude gauge and thermometer
K	¾	not used	operating control, tankless heater
L	¾	not used	reverse acting control

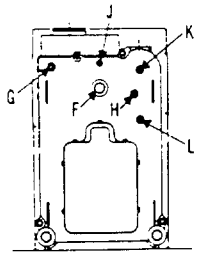

Note: 2-inch blow-off in back section.
2-inch safety or relief valve on top of back section

AMERICAN STANDARD

00234

no. 530 tankless heater ratings

boiler number	number of heaters	ratings■ (gpm)
A-504—A-511	1	4
A-504—A-511	2	7
A-505—A-511	3	10
A-508—A-511	4	13
A-510—A-511	5	16

■Gallons of water per minute raised from 40°F to 140°F with 200°F boiler water temperature.

The above table shows the recommended number of heaters to be used with each boiler and the ratings attained if more than one heater is connected in parallel. Additional heaters can be added if the heaters are serving different systems and it is not likely that heaters will all be in use at the same time.

No. 530 tankless heater available for single purpose or multiple parallel hook-up. Copper manifolds (illustrated below) for two, three or four-heater parallel arrangement furnished with No. 530 heater if specified.

Provision for tankless heater is available when specified. If suffix letter "T" is added on order to unit or boiler numbers, the following maximum number of center sections with heater openings will be furnished.

boiler or unit number	number of openings
A-504-T	2
A-505-T A-506-T A-507-T	3
A-508-T A-509-T	4
A-510-T A-511-T	4 or 5

Note: Additional openings can be specified on order. Cover plate for water heater openings will be furnished if specified on order, at added charge for "T" type units and boilers. Cover plate is available with 2" tapping for connection of external water heater.

tankless heater piping

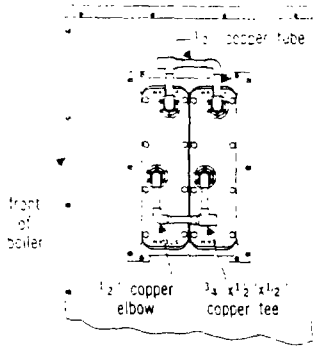

2 heater manifold piping

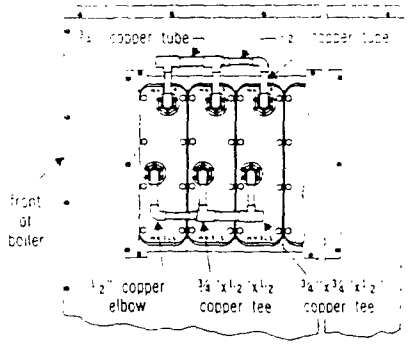

3 heater manifold piping

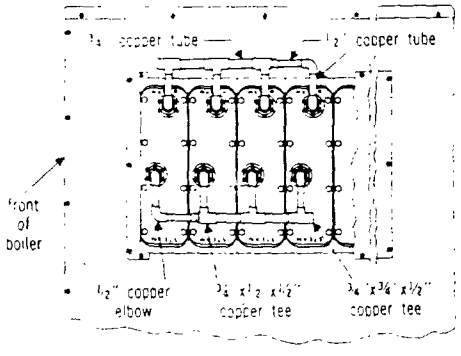

4 heater manifold piping

Note: Single arrangement or any combination of the above manifold piping arrangements can be used. Water heaters are assembled in boiler starting with the second section from front of boiler. Heater cover plates are marked "steam" and "water." When installing in a steam boiler the word "steam" should read at the top, when installing in a water boiler, the word "water" should read at the top.

minimum piping recommendations

hot water

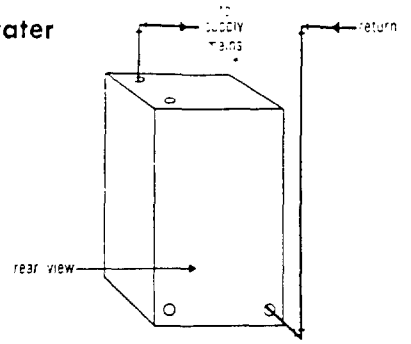

boiler number	gravity supply (in.)	gravity return (in.)	forced supply (in.)	forced return (in.)
A-504	2½	2½	1½	1½
A-505	2½	2½	2	2
A-506	(2)-2	(2)-2	2	2
A-507	(2)-2	(2)-2	2	2
A-508	(2)-2½	(2)-2½	2½	2½
A-509	(2)-2½	(2)-2½	2½	2½
A-510	(2)-2½	(2)-2½	2½	2½
A-511	(2)-2½	(2)-2½	2½	2½

steam

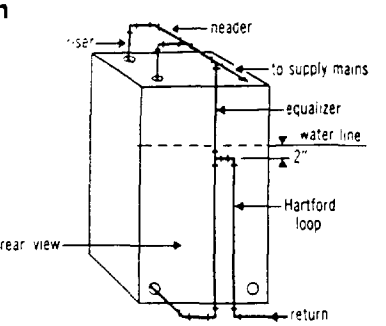

boiler number	riser (in.)	header (in.)	equalizer (in.)	return (in.)
A-504	3	—	2½	1¼
A-505	3	—	2½	1¼
A-506	4	—	2½	1¼
A-507	4	—	2½	1½
A-508	(2)-3	4	2½	1½
A-509	(2)-4	4	2½	1½
A-510	(2)-4	4	2½	2
A-511	(2)-4	5	2½	2

optional combustion chamber dimensions

Heat Lib-O-Rator molded refractory combustion chambers

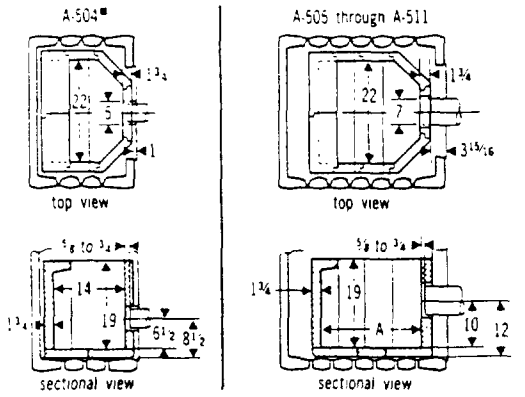

■ Chamber number 14-A

Heat Lib-O-Rator refractory combustion chambers are standard equipment on A-5 boiler-burner units; optional with boiler only.

boiler number	Heat Lib-O-Rator chamber number	A (in.)
A-505	15-A	15½
A-506	15-AA	20
A-507	16-A	21½
A-508	16-A	21½
A-509	17-A	27½
A-510	17-A	27½
A-511	17-A	27½

fire brick refractory combustion chambers

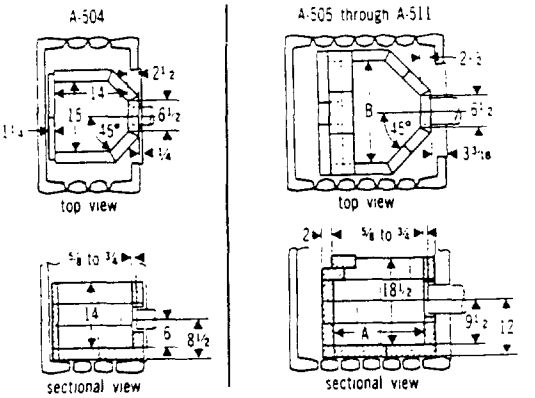

boiler number	A (in.)	B (in.)
A-505	14½	18
A-506	18	18
A-507	20	22
A-508	22	22
A-509	24	22
A-510	24	22½
A-511	26	22½

AMERICAN STANDARD

AMERICAN STANDARD

PLUMBING / HEATING

P.O. BOX 2003, NEW BRUNSWICK, N. J. 08903

00237

Form No. 758.2 Rev. 2 - 5-71

Litho in U.S.A.