C 2.32.0

A

To: Distribution

From: R. A. Frohreich
Date: February 13, 1986

Interoffice Communication

Subject: AMS EMERGENCY KILL SYSTEM OPERATION MANUAL

VISTA

Attached is an updated copy of the AMS Emergency Kill System Operating Manual. Please destroy the September 1, 1981 issue and replace it with this updated copy.

R. A. Frohreich
R. A. Frohreich
Director Of Environmental Control

rah

cc: JF, JWW, DWH, CWT, MLN, RAC, DFJ, BFH, BK,
ALR, CRS, JLH, VEM, VLT, SCH, FGJ, [redacted], JGC

A

OPERATING MANUAL

AMS EMERGENCY KILL SYSTEM

ABERDEEN PVC PLANT

UPDATED FEBRUARY 13, 1986

A

TABLE OF CONTENTS

OPERATING MANUAL

AMS EMERGENCY KILL SYSTEM

ABERDEEN PVC PLANT

		Page No.
I.	INTRODUCTION	1
	A. PURPOSE	1
	B. OPERATOR RESPONSIBILITIES	1
	C. PROCESS INFORMATION	1
II.	GENERAL PROCESS DESCRIPTION	2
III.	SAFETY	5
IV.	OPERATING PROCEDURES	7
	A. WHEN TO USE	7
	B. HOW TO USE	8
	C. NORMAL OPERATION	11
	D. TESTING PROCEDURE	13
V.	APPENDIX	16
VI.	P & I DIAGRAMS	18

I. INTRODUCTION

A. Purpose

The purpose of the AMS Emergency Kill System is to in-increase the reliability and effectiveness of equipment and procedures used to safely and quickly stop the polymerization reaction in the reactors. Stopping the reaction prevents excessive pressure buildup which can cause emergency releases through the reactor relief valves. This system allows any or all reactors to be shut down in an orderly and safe manner. This manual describes the system and the operator's responsibilities for operating and maintaining the system.

B. Operator Responsibilities

The operator is responsible for producing quality products in a safe and efficient manner. He fulfills his responsibilities by knowing the following:

1. Understanding how his equipment functions.
2. Understanding what role each piece of equipment plays in the process.
3. Keeping a close and regular check on equipment.
4. Knowing how to spot malfunctions and correct them.
5. Keeping his area of responsibility safe and clean.
6. Keeping complete and accurate records.

C. Process Information

The polymerization reaction of VCM to form PVC gives off heat and accelerates as temperature increases. It is therefore necessary to remove the heat of reaction with cooling water in the reactor jacket and condenser.

VAB.0001105002

A

I. INTRODUCTION - Continued

C. Process Information - continued

Reactor agitation is also required to maintain uniform reactor mixing and efficient heat removal.

If reactor cooling and/or agitation is lost, the polymerization reaction must be stopped. Failure to do so will result in a runaway reaction with increasing temperature and pressure. The reactor pressure would increase until the rupture disc/safety valve assemblies would vent the reactor contents to the atmosphere.

The AMS Emergency Kill System provides the capability of injecting up to 25 gallons of AMS into each of the large reactors and up to 60 gallons into the expansion reactors. This can be done either remotely from the control room or manually at the reactor top manway platform. AMS can be injected into a reactor as soon as agitation is lost to take advantage of mixing caused by residual swirling motion. Maintaining cooling water flow after loss of agitation will also help mixing by refluxing in addition to removing heat of reaction.

II. GENERAL PROCESS DESCRIPTION

Refer to the attached P & I diagrams for the complete system layout for each reactor area.

Emergency kill injection pots are provided at grade level for each reactor. All injection pots are to be maintained at 250 to 275 psig pressure using high pressure nitrogen cylinders. A separate nitrogen

VAB.0001105003

A

cylinder and spare are provided for each injection pot. A local AMS level gauge and a pressure gauge are provided on each pot in addition to a board-mounted low pressure alarm and a low level alarm.

The A operator is to check the appropriate injection pot level and pressure before starting each reactor charge sequence.

Killing agent can be injected into the reactor either remotely by the lead operator or locally by the A operator. Normally, the emergency kill system is activated from the board to minimize time and maximize mixing. One switch for each reactor operates automatic double block valves at the reactor top manway level. Placing the switch in automatic mode opens the valves and allows a low level switch in the injection pot to close the valves. Placing the switch in the momentary-contact manual mode also opens the valves but the valves close when the switch is released. Each injection pot low level switch also activates a local light at the manual injection point at the reactor top manway level. The automatic closure of the remote injection valves and the local low level indicator light are provided to prevent nitrogen from being injected into the reactor, blanketing the condenser and reducing cooling efficiency.

VAB.0001105004

An emergency injection header is provided at the reactor top head level in each reactor module. The header allows any injection pot to be used to kill any reactor in the module or to inject additional killing agent if needed. The procedure requires two hoses, one to connect the injection pot to the header, and one to connect the header to the reactor. Killing agent can then injected locally by the A operator or remotely by the lead operator. It should be noted that when the emergency injection header is used, the injection pot low level switch will neither automatically close the remote injection valves nor light the appropriate local indicator light. Caution should be taken to prevent charging nitrogen into the reactor when using the header.

The remote injection automatic valves are operated by nitrogen supplied by a high pressure nitrogen cylinder and spare. A board-mounted low pressure alarm is provided for each area to alert the board operator when the cylinder in use has dropped below 600 psig. A cylinder with less than 600 psig pressure does not contain enough nitrogen to operate the control valves and is to immediately changed out with a full cylinder.

VAB.0001105005

III. SAFETY

The operation of the emergency kill system does not present any extremely hazardous situations. In fact, its main purpose is to reduce the potential for having hazardous situations in the reactor area. However, some potential hazards are present and precautions should be taken to prevent serious incidents.

A. The killing agent AMS has been in use for some time in the plant and the operators are already familiar with the corresponding safety hazards and proper handling procedures. The attached vendor literature describes chemical properties and safe handling procedures. It should be emphasized that AMS is highly reactive in the presence of the peroxide initiators used in the plant. AMS AND INITIATOR SHOULD NEVER BE MIXED UNDER ANY CIRCUMSTANCES.

B. The AMS injection pots are to be maintained at 250 to 275 psig by high pressure nitrogen cylinders. Due caution should be exercised in the handling of nitrogen cylinders. Operators should avoid damaging the outlet valves on these cylinders. The AMS injection pots will contain AMS at 250 to 275 psig pressure, so proper safety precautions should be taken while working with or near these vessels.

An injection pot must be depressurized before the block valve on the AMS fill line is opened.

VAB.0001105006

III. SAFETY - Continued

The nitrogen supply to the pot must be turned off at the pot prior to venting the pot. The pots are only to be vented through the bleed valve on the pressure gauge/pressure switch piping on the top of the pots.

C. The rupture disk and relief assembly on each injection pot is set to relieve at 400 psig, the vessel design pressure. Since the nitrogen bottle regulator may occasionally leak through, a potential exists for overpressuring an injection pot and causing the rupture disk to burst. Even if the killing agent didn't spray out when the relief devices opened, it is probable the relief valve would not completely reseat and the nitrogen bottle would slowly depressure through the pot and relief valve to atmosphere. The outside operator is to routinely check injection pot pressures to insure it is neither too low nor too high.

D. The AMS killing agent is a volatile hydrocarbon, and thus fire and explosions are theoretically possible. Precautions are to be taken to prevent spills and excessive accumulation of flammable vapors.

E. Since the injection pots are connected to the reactors, a potential exists for backing VCM into the pots. This poses no serious immediate problem since the AMS would kill any reaction that was occurring. However, it could present an exposure problem later when the injection pot is opened.

VAB.0001105007

III. SAFETY - Continued

The injection pots are to be maintained at 250 to 275 psig pressure except when refilling.

F. Finally, operators are to keep in mind that this system will be used when the plant is in an upset condition, i.e., power failure, loss of cooling water, reactor runaway, etc. It is critical that this system operate properly in such an emergency. System maintenance and operator familiarity with this system are equally important factors for ensuring the dependability of this system.

IV. OPERATING PROCEDURES

A. When To Use

The emergency kill system is to be used under the following circumstances:

1. If there is a power failure.
2. Extended loss of cooling water to a reactor in polymerization mode.
3. Extended loss of agitation to a reactor in polymerization mode. When agitation is lost, it is important to kill the reaction as soon as possible. The reactor contents will continue to swirl for about four minutes after agitator shutdown, and AMS injection during this period is much more effective.

VAB.0001105008

4. A runaway reaction with increasing temperature and pressure which is not responding to small AMS injections (short stop) from the initiator charge pot.

5. Any other circumstance considered by the operator to represent a significant chance of over pressuring the reactor or affecting safe operation of the plant.

6. If for any reason the reactor temperature or pressure reaches the following:

a. 5305 & 5265	155 psig	160°F
b. All other resin types	145 psig	142°F

B. How To Use

1. The Lead Operator is to depress the manual AMS emergency kill button and keep it depressed for two seconds after to open light comes on. This opens both remote operated valves and AMS is injected into the reactor. Both valves close when the button is released stopping the addition of AMS into the reactor.

2. The Shift Supervisor or Chief Lead will then check the local level gauge on the AMS injection port to confirm AMS was added to the reactor and he will also determine the number of inches of AMS added from the ruler on the injection pot.

VAB.0001105009

IV. OPERATING PROCEDURES - Continued

B. How To Use - continued

3. In case of a power failure, the Lead Operator is to kill reactors in the following order and all must be killed within two minutes.

   a. 5265 or 5305 batches

   b. Reactors which are near pressure drop

   c. Reactor just reaching end of heat up

   d. Remaining reactors

4. After AMS injection, the Lead Operator will closely monitor the reactor temperature and pressure and will add additional AMS per step 1 if the initial injection does not kill the reaction.

5. If the remote operated injection system fails to work, the A Operator is to manually inject AMS into the reactor by opening the two manual valves on the manual AMS injection line at the reactor head level.

6. If all the AMS in the injection pot is added to the reactor and more AMS is required to stop the reaction, the emergency injection header is to be used. This header allows AMS which is contained in any of the other reactor injection pots to be added to the reactor which is being killed. To use this header, the A Operator connects one hose from a full and pressurized injection pot to the header and a second hose from the header to the reactor being killed.

VAB.0001105010

Additional AMS injection can then proceed either locally or remotely from the control room. Caution is to be taken when using the header system since the injection pot low level switch shut off feature will not work in this situation and nitrogen may enter the reactor.

7. If excess nitrogen does enter the reactor, the condenser is to be vented to the recovery system.

8. As soon as possible after AMS injection, the A Operator is to refill the AMS injection pot by the following procedure:

   a. Close the block valve on the nitrogen supply line at the pot.

   b. Depressure the pot through the pressure gauge vent valve.

   c. Refill the pot with AMS from the 55 gallon drum using the air-operated drum pump.

   d. Close and plug the pressure gauge vent valve.

   e. Pressure the injection pot to 250 to 275 psig with the nitrogen supply system.

   f. Radio communication between personnel in the field and the Lead Operator is to be maintained at all times. The A Operator is to inform the Lead Operator how the system is operating and what is being done

VAB.0001105011

IV. OPERATING PROCEDURES - Continued

in the field. The Lead Operator is to keep the A Operator informed of reactor pressure and of any apparent need for additional AMS injection.

C. Normal Operation

1. A reactor is not to be charged unless its AMS injection system is in proper operating condition. It is the responsibility of the A Operator to check this in the field and notify the lead operator who will record the information on the batch sheet prior to each reactor charge. The following items are to be checked immediately before each charge:

a. The AMS level in the injection pot is to be at or above a seven-inch outage. The actual outage is to be recorded by the lead operator.

b. The pressure in the injection pot is to be 250 to 275 psig. This is to be checked on the injection pot pressure gauge.

c. The pressure of the nitrogen cylinders being used for AMS injection is to be at least 1200 psig. Cylinders with lower pressures must be changed out and replaced with full cylinders. EMPTY BOTTLES ARE NOT TO BE LEFT IN THE BOTTLE RACKS.

VAB.0001105012

IV. OPERATING PROCEDURES - Continued

C. Normal Operation - continued

d. The pressure of the nitrogen cylinder being used to actuate the automatic AMS injection valves must be at least 600 psig. A cylinder with a lower pressure must be changed out and replaced full cylinder. The pressure on the outlet of the regulator for this cylinder is to be 100 psig.

e. The block valve in the AMS kill line (outlet valve at bottom of pot) is to be fully open.

f. The block valve in the AMS instrument nitrogen line at the reactor manway level is to be fully open.

g. Both block valves on the manual AMS injection line at the reactor manway level are to be fully closed.

If any of the above conditions are not met, they are to be corrected before the reactor is charged.

2. To insure proper operation of the system, the following items should be checked by the A Operator at the beginning of each shift:

a. The pressure gauges between the double block valves on both the automatic and the manual injection lines should routinely be bled to 0 psig.

VAB.0001105013

A

C. Normal Operation - continued

If pressure subsequently builds up on these gauges, it indicates that one or both of the double block valves are leaking. Note: These gauges will have pressure on them after AMS injection.

b. All spare nitrogen cylinders in the racks are to be full.

The above items are vital to the proper operation of the emergency kill system. If any of these conditions are not met, they are to be immediately corrected.

D. Testing Procedures

1. The AMS Emergency Kill System for each reactor will be tested per the frequency indicated below. Each system will be checked to assure proper valve position, proper operation of the remote operated valves, and that the AMS inlet lines to the reactor are not plugged. The Shift Supervisor, the Chief Operator, the A Operator and the Lead Operator will conduct the testing. The testing procedure for each reactor is as follows:

To Be Conducted Weekly

a. The A Operator is to perform a complete visual check of the system both at grade level and the reactor manway level. All on-off valves are to be in their proper position and any problems detected with the system are to be noted and corrected.

IV. OPERATING PROCEDURES - Continued

D. Testing Procedures - continued

To Be Conducted Weekly - continued

b. The Shift Supervisor is to check for any pluggage in the manual injection system nozzle (also the remote injection system nozzle for D-300, D-700 and 745) using a rod through the rod-out port. Any blockage found is to be removed. This check is to be made during dump or rinse of the reactor. The shift supervisor is to note in his log book which reactors are checked for pluggage of the injection nozzles.

c. The following procedure will be used to check the remote operated system and to assure the injection nozzle is not plugged. The checkout will consist of injection of a small amount of AMS into the reactor by cycling the remote operated AMS valves. The check is to be made after dump is complete and before the rinse to the sewer. The Lead Operator, who is in communication with the field operator, will cycle the remote operated valves using the manual addition button and will also check the lights on the panel for open and close indication. The field Operator will check the operation of the remote valves in the field. The A

D. Testing Procedures - continued

To Be Conducted Weekly - continued

Operator will check the AMS injection pot to assure AMS addition to the reactor by measuring the level in the AMS injection pot before and after the AMS addition. The reactor is to be rinsed after the AMS is injected and the A Operator is to refill the AMS injection pot before the next batch is charged in that reactor. The Shift Supervisor is to note in his log book the reactors which are checked.

2. The normal pre-charge checks are to be conducted on the AMS kill system before the reactor is charged.

3. Whenever the ambient temperature drops below 20°F, the AMS kill system for each reactor is to be checked once per shift. The check is to assure the injection nozzle is open and that there is no pluggage due to freezing in the kill system. The check out will consist of injection of a small amount of AMS into the reactor by cycling the remote operated valves and is to be made after dump is complete and before the rinse to the sewer.

VAB.0001105016

D. Testing Procedures - continued

The Lead Operator, who is in communication with the field operators, will cycle the remote operated valves using the manual addition button and will also check the lights on the panel for open and close instruction. The field Operator will check the operation of the remote valves in the field. The A Operator will check the AMS injection pot to assure AMS addition to the reactor by measuring the level in the AMS injection pot before and after AMS addition. The reactor is to be rinsed after the AMS is injected and the A Operator is to refill the AMS injection pot before the next batch is charged in that reactor. The A Operator is to record the checking of the AMS kill systems on his Winter Protection Check List.

VAB.0001105017

V. APPENDIX

A

STORAGE AND HANDLING OF

ALPHA-METHLY STYRENE

Alpha-Methyl styrene is usually stored and handled in steel equipment. It is also compatible with stainless steel, aluminum, and galvanized iron. Copper and copper alloys are not recommended for this service.

This product has a fairly low freezing point (about -10°F) and low viscosity. Underground storage tanks and lines should be considered, as their use will prevent freezing in winter and keep the product cool in summer. Storage temperature should not exceed 100°F. Storage under a nitrogen blanket is preferred; exclusion of air (oxygen) will reduce the chances of polymerization, peroxide formation, and fire.

Piping can be of the materials listed above. A centrifugal pump is suggested for transfer service. "Teflon" is suitable for gaskets and packing.

An inhibitor, para-tertiary butyl catechol (10-20 ppm), is used in alpha-methyl styrene to inhibit polymerization. If storage time is prolonged, the inhibitor concentration should be checked occasionally and more inhibitor added, if needed. Alpha-Methyl styrene is a toxic chemical; contact with liquid or vapors should be avoided.

VAB.0001105019

U.S. DEPARTMENT OF LABOR
Occupational Safety and Health Administration

Form Approved
OMB No. 44-R1387

A

MATERIAL SAFETY DATA SHEET

Required under USDL Safety and Health Regulations for Ship Repairing, Shipbuilding, and Shipbreaking (29 CFR 1915, 1916, 1917)

SECTION I

MANUFACTURER'S NAME USS Chemicals Division, U. S. Steel Corporation	EMERGENCY TELEPHONE NO. (614) 532-3420
ADDRESS (Number, Street, City, State, and ZIP Code) 600 Grant Street, Pittsburgh, Pa. 15230	
CHEMICAL NAME AND SYNONYMS Alpha Methylstyrene, Phenyl Propylene	TRADE NAME AND SYNONYMS AMS (Alpha Methyl Styrene)
CHEMICAL FAMILY Aromatic Hydrocarbon	FORMULA C_9H_{10}

SECTION II - HAZARDOUS INGREDIENTS

NOT APPLICABLE

PAINTS, PRESERVATIVES, & SOLVENTS	%	TLV (Units)	ALLOYS AND METALLIC COATINGS	%	TLV (Units)
PIGMENTS			BASE METAL		
CATALYST			ALLOYS		
VEHICLE			METALLIC COATINGS		
SOLVENTS			FILLER METAL PLUS COATING OR CORE FLUX		
ADDITIVES			OTHERS		
OTHERS					

HAZARDOUS MIXTURES OF OTHER LIQUIDS, SOLIDS, OR GASES	%	TLV (Units)

SECTION III - PHYSICAL DATA

BOILING POINT (°F.)	329.2	SPECIFIC GRAVITY (H_2O=1)	0.907
VAPOR PRESSURE (mm Hg.)	Low	PERCENT, VOLATILE BY VOLUME (%)	Low
VAPOR DENSITY (AIR=1)	4.1	EVAPORATION RATE (Water =1) Less Than	1
SOLUBILITY IN WATER	Neg.		

APPEARANCE AND ODOR Colorless liquid

SECTION IV - FIRE AND EXPLOSION HAZARD DATA

FLASH POINT (Method used) Tag Closed Cup - 114°F.	FLAMMABLE LIMITS	Lel 1.9	Uel 6.1

EXTINGUISHING MEDIA
Water, foam, dry chemical and carbon dioxide

SPECIAL FIRE FIGHTING PROCEDURES
Water spray can be used to control unconfined fires, but a straight hose stream should not be used. Fireman should have self-contained breathing apparatus.

UNUSUAL FIRE AND EXPLOSION HAZARDS
None

(Continued on reverse side)

VAB.0001105020

SECTION V · HEALTH HAZARD DATA

THRESHOLD LIMIT VALUE
100 ppm or 480 mg./M^3 as per Federal Register

EFFECTS OF OVEREXPOSURE
Headache, dizziness, light-headedness, breathlessness

EMERGENCY AND FIRST AID PROCEDURES
Move to fresh air. Keep quiet and warm. If not breathing, apply artificial respiration.

SECTION VI · REACTIVITY DATA

STABILITY	UNSTABLE	X	CONDITIONS TO AVOID
	STABLE		Strong oxidizing agents, Acidic conditions and free radical initiators

INCOMPATABILITY *(Materials to avoid)*
Acid materials and free radical initiators

HAZARDOUS DECOMPOSITION PRODUCTS

HAZARDOUS POLYMERIZATION	MAY OCCUR	X	CONDITIONS TO AVOID
	WILL NOT OCCUR		Strong oxidizing agents, Acidic conditions and free radical initiators

SECTION VII · SPILL OR LEAK PROCEDURES

STEPS TO BE TAKEN IN CASE MATERIAL IS RELEASED OR SPILLED
Large amounts - flush with water but prevent passage to drains and sewers

Small amounts - mix with sand and burn

WASTE DISPOSAL METHOD
Large amounts - atomize into an approved combustion chamber

SECTION VIII · SPECIAL PROTECTION INFORMATION

RESPIRATORY PROTECTION *(Specify type)*
Self-contained breathing apparatus for severe exposure

VENTILATION	LOCAL EXHAUST	SPECIAL
	Preferred	None
	MECHANICAL *(General)*	OTHER

PROTECTIVE GLOVES	EYE PROTECTION
Suitable rubber or of nonsoluble plastic materials.	Safety goggles

OTHER PROTECTIVE EQUIPMENT
Not a serious industrial hazard - normal care.

SECTION IX · SPECIAL PRECAUTIONS

PRECAUTIONS TO BE TAKEN IN HANDLING AND STORING
Keep away from heat, sparks and open flame.

OTHER PRECAUTIONS
None

VAB.0001105021

VAB.0001105022

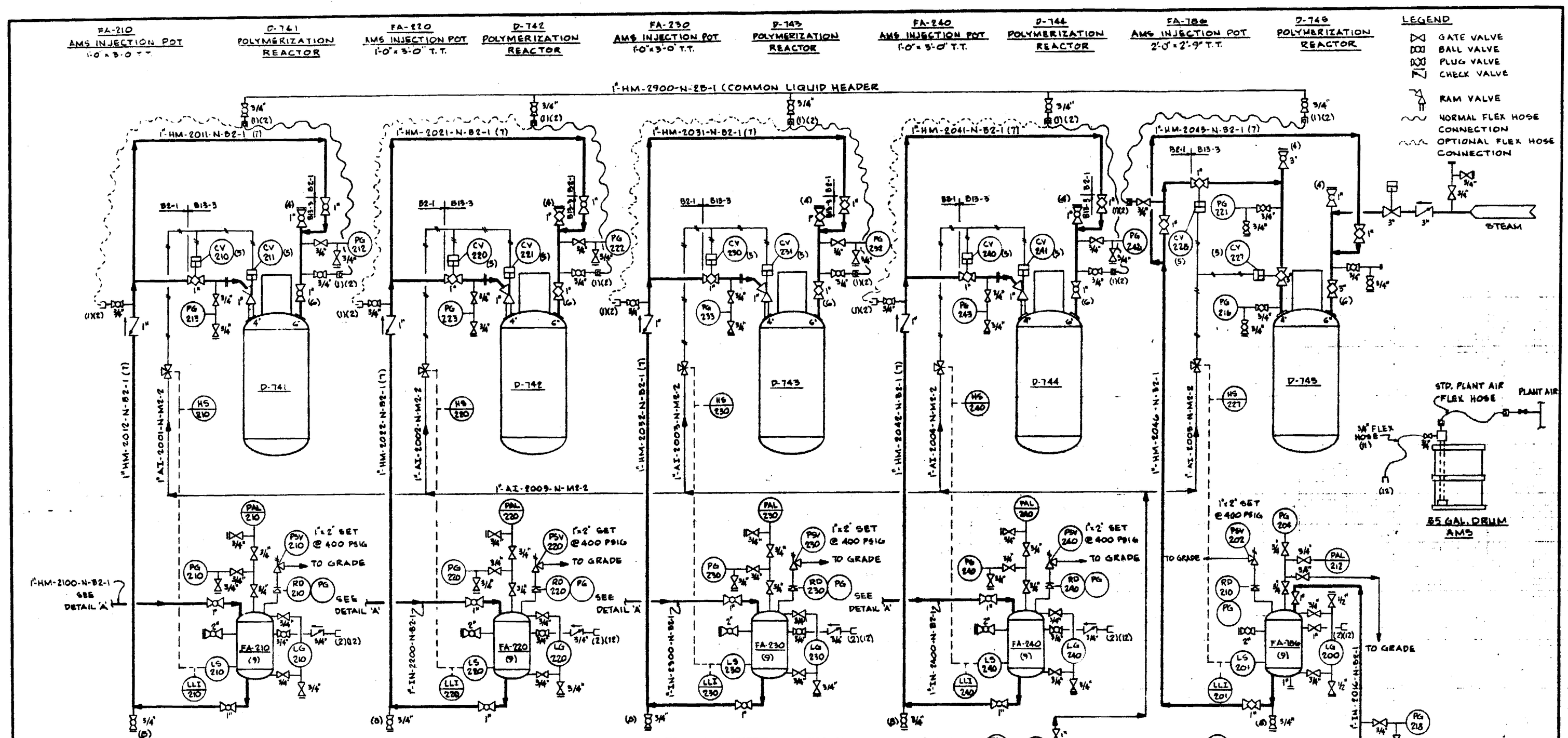

NOTES:

1. MINIMIZE THE DISTANCE FROM THE HEADER HOSE CONNECTION TO THE MANUAL INJECTION LINE HOSE CONNECTION (< 5FEET). THESE CONNECTIONS ARE TO BE EASILY ACCESSIBLE TO THE OPERATOR AT THE REACTOR TOP HEAD LEVEL.
2. COUPLING TO BE AEROQUIP FD-56 SERIES.
3. NITROGEN LINES ARE TO BE SEAL WELDED TO MINIMIZE LEAKAGE.
4. THE THREE-INCH BLEED VALVE ON THE AUTOMATIC INJECTION LINE IS TO BE LOCATED DIRECTLY ABOVE THE THREE-INCH ON/OFF CONTROL VALVE, WHICH IS IN A DIRECT LINE WITH THE REACTOR NOZZLE. SIMILARLY, THE ONE-INCH BLEED VALVE IS LOCATED ABOVE THE ONE-INCH BLOCK VALVE ON THE MANUAL INJECTION LINE. THESE VALVES WILL BE USED FOR INSPECTION OF THE AMS INLET NOZZLES ON THE REACTOR TOP HEAD AND MUST BE FULL PORT VALVES.
5. PROVIDE EASY ACCESS TO MANUAL OPERATORS ON ALL OF THE AUTOMATIC INJECTION LINE CONTROL VALVES.
6. MINIMIZE THE DISTANCE BETWEEN THE DOUBLE BLOCK VALVES. ALSO, MINIMIZE THE VERTICAL DISTANCE FROM THE REACTOR NOZZLE TO THE CLOSEST BLOCK VALVE.
7. LINES ARE TO BE SEAL WELDED TO MINIMIZE LEAKAGE.
8. LOW POINT DRAIN.
9. INJECTION POTS LOCATED AT GRADE.
10. ALL NITROGEN BOTTLES ARE TO BE CHAINED IN BOTTLE RACKS TO PREVENT DAMAGE TO CYLINDERS AND TO PROTECT THE OPERATOR.
11. DRUM PUMP HOSE IS TO BE PERMANENTLY ATTACHED TO THE DRUM PUMP.
12. AMS FROM 55 GAL. DRUM CONNECTION.

TABLE A

AMS KILL POT	PCV	PA	PG
FA-210	210	210, 210S	215, 216
FA-220	220	220, 220S	225, 226
FA-230	230	230, 230S	235, 236
FA-240	240	240, 240S	245, 246

ISU	DATE	DESCRIPTION	BY	CKD	APD
0	1-6-86	ORIGINAL	KAC	KAF	KAF

Vista Polymers Inc.

ABERDEEN MISSISSIPPI

SECTION: SOUTHWEST NEW UNIT

P&I DIAGRAM

CRD AMS EMERGENCY KILL SYSTEM

SCALE: NONE

APPD: KAF

DATE: 1-7-86

No. SW-D010-42-1-D

VAB.0001105023

A

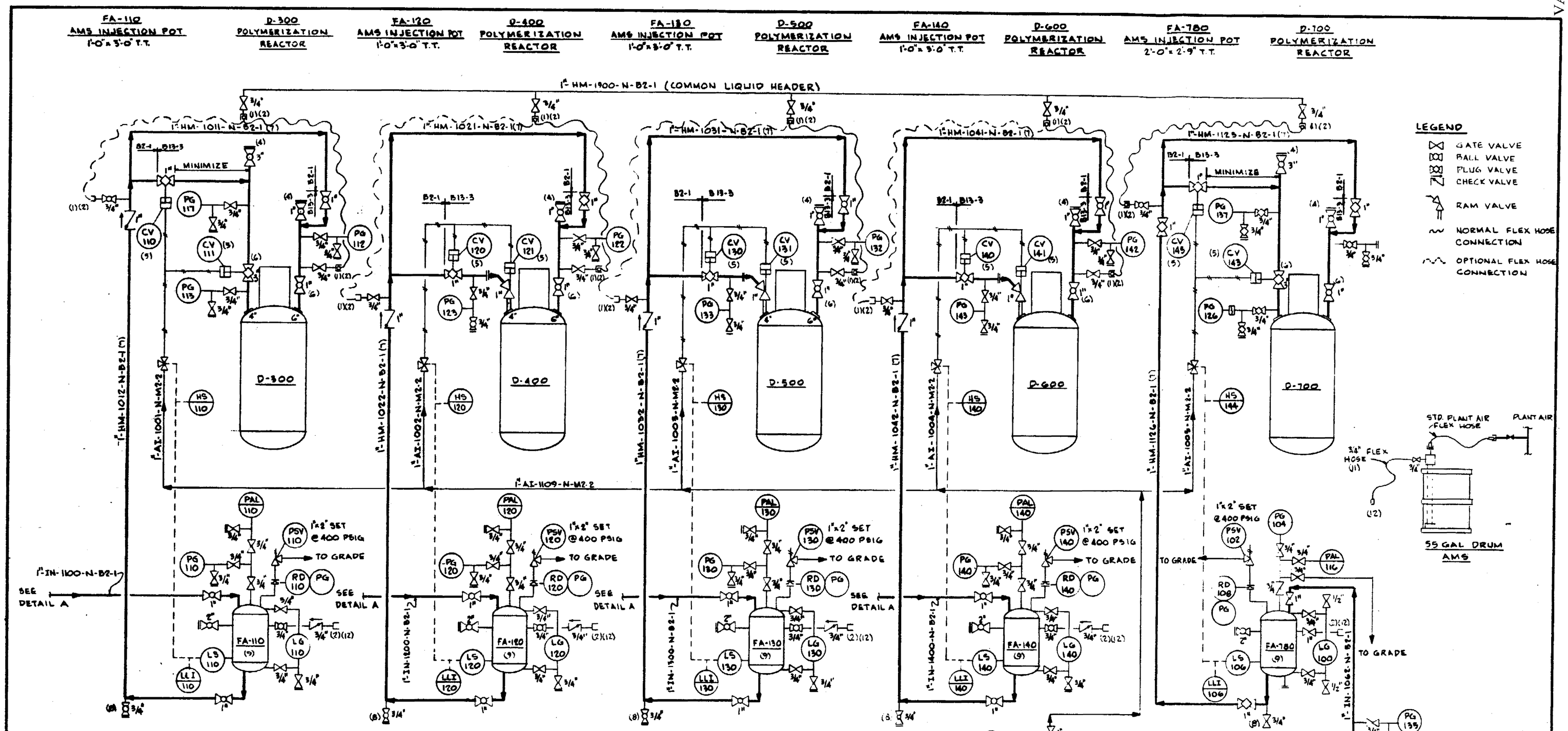

NOTES:

1. MINIMIZE THE DISTANCE FROM THE HEADER HOSE CONNECTION TO THE MANUAL INJECTION LINE HOSE CONNECTION (<5 FEET). THESE CONNECTIONS ARE TO BE EASILY ACCESSIBLE TO THE OPERATOR AT THE REACTOR TOP HEAD LEVEL.
2. COUPLING TO BE AEROQUIP FD-56 SERIES.
3. NITROGEN LINES ARE TO BE SEAL WELDED TO MINIMIZE LEAKAGE.
4. THE THREE-INCH BLEED VALVE ON THE AUTOMATIC INJECTION LINE IS TO BE LOCATED DIRECTLY ABOVE THE THREE-INCH ON/OFF CONTROL VALVE, WHICH IS IN A DIRECT LINE WITH THE REACTOR NOZZLE. SIMILARLY, THE ONE-INCH BLEED VALVE IS LOCATED ABOVE THE ONE-INCH BLOCK VALVE ON THE MANUAL INJECTION LINE. THESE VALVES WILL BE USED FOR INSPECTION OF THE AMS INLET NOZZLES ON THE REACTOR TOP HEAD AND MUST BE FULL PORT VALVES.
5. PROVIDE EASY ACCESS TO MANUAL OPERATORS ON ALL OF THE AUTOMATIC INJECTION LINE CONTROL VALVES.
6. MINIMIZE THE DISTANCE BETWEEN THE DOUBLE
6. (CONT.) BLOCK VALVES. ALSO, MINIMIZE THE VERTICAL DISTANCE FROM THE REACTOR NOZZLE TO THE CLOSEST BLOCK VALVE.
7. LINES ARE TO BE SEAL WELDED TO MINIMIZE LEAKAGE.
8. LOW POINT DRAIN.
9. INJECTION POTS. LOCATED AT GRADE.
10. ALL NITROGEN BOTTLES ARE TO BE CHAINED IN BOTTLE RACKS TO PREVENT DAMAGE TO CYLINDERS AND TO PROTECT THE OPERATOR.
11. DRUM PUMP HOSE IS TO BE PERMANENTLY ATTACHED TO THE DRUM PUMP.
12. AMS FROM 55 GAL. DRUM CONNECTION.

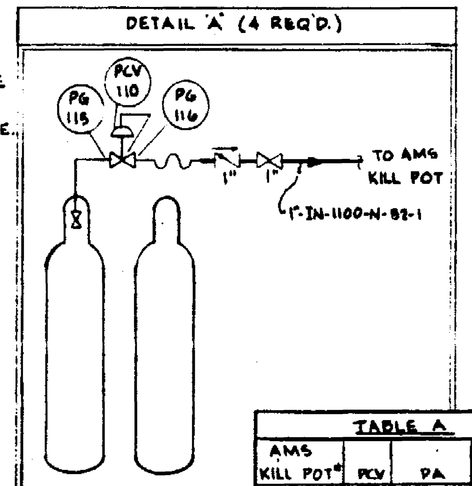

PA-110 PA-1105
(SHOWN FOR FA110)
NITROGEN CYLINDERS

TABLE A			
AMS KILL POT*	PCV	PA	PG
FA-110	110	110,1105	115, 116
FA-120	120	120,1205	125, 126
FA-130	130	130,1305	135, 136
FA-140	140	140,1405	145, 146

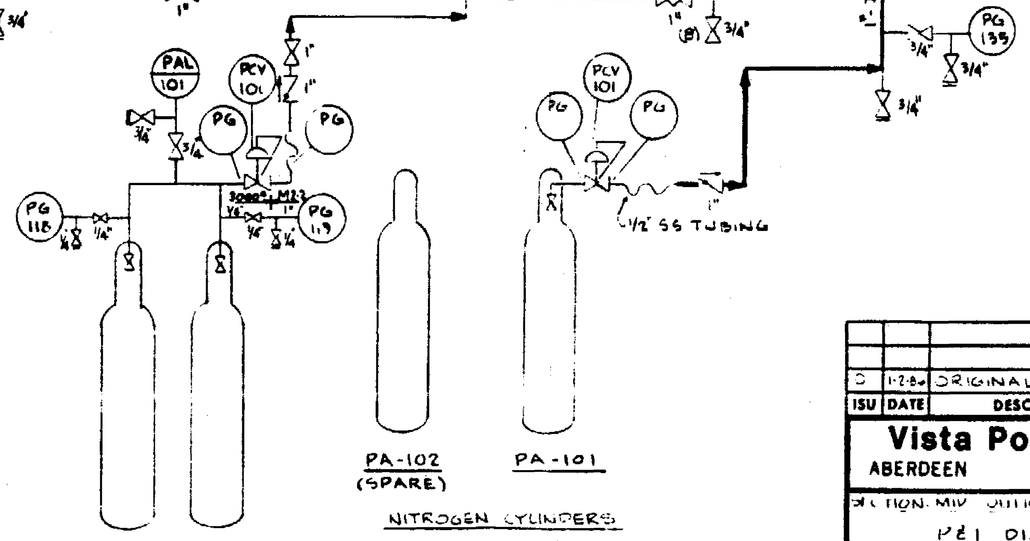

PA-100 PA-1005
NITROGEN CYLINDERS

PA-102 (SPARE)
PA-101
NITROGEN CYLINDERS

ISU	DATE	DESCRIPTION	BY	CKD	APD
0	1-2-84	ORIGINAL	RAC	KAF	KAF

Vista Polymers Inc.
ABERDEEN MISSISSIPPI

SECTION: MIX UNIT — AREA: INIT

P&I DIAGRAM
V-11 AMS EMERGENCY KILL SYSTEM

SCALE: NONE

APPD: KAF
DATE: 1-12-84

No. MS-E025-42-1-D