MISCELLANEOUS ACCESSORIES AND COMPONENTS

Float Switches

WHEN ORDERING SPECIFY

- Catalog number

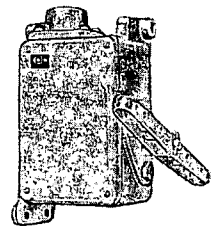

HEAVY DUTY—2 POLE ❶

Horsepower Ratings						Type of Mtg.	Type of Operation	❸ Weatherproof NEMA 3 Encl.			
Single Phase A-c		Three Phase A-c		D-c				Cold Water ❷ Service		Hot Water Service	
Volts	Max. Hp	Volts	Max. Hp	Volts	Max. Hp			Cat. No.	Price	Cat. No.	Price
								10036-		10036-	
						Wall	Basic Sw. w/o Access.	H15	$41.30	H15	$41.30
							Rod	H17	80.	H31	116.
115	2	110	3	120	1		Chain	H22	80.	H36	116.
230	3	208/220	5	240	1						
---	---	440-550	7½	600	1	Floor	Rod	H19	94.	H33	130.
							Chain	H20	94.	H34	130.

DISCOUNT SCHEDULE 1 CD

❶ Furnished with 5 ft. rods or 15 ft. chains except basic switch.

❷ Float switch with accessories for cold liquid can be used where the temperature does not exceed 100°F., where the temperature is likely to exceed this, the switch with stainless steel accessories for hot liquid should be used.

❸ NEMA 4 and 9EFG enclosures also available.

APPROXIMATE DIMENSIONS AND SHIPPING WEIGHTS

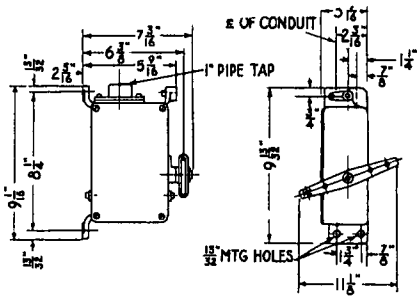

OPTIONAL FEATURES

Description	Cold Water Service (Bronze)	Hot Water Service (Stainless Steel)
1. Additional Length of Rod.....	$3.10/5 ft. length	$15.50/5 ft. length
2. Additional Length of Chain.....	.28/ft.	1.70/ft.

HEAVY DUTY—2 POLE —Open Tank Type—Without Float and Float Rod

Horsepower Ratings							Operation	Catalog Number	Price
Polyphase		Single Phase			D-c				
110V.	220-440-550V.	115V.	230V.	440-550V.	32V.	120-240V.			
3	5	2	3	5	½	1	Sump Tank	10037-H8	$15.
								H9	15.

DISCOUNT SCHEDULE 2 CD

APPROXIMATE DIMENSIONS AND SHIPPING WEIGHTS

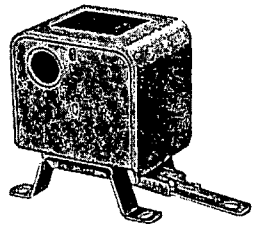

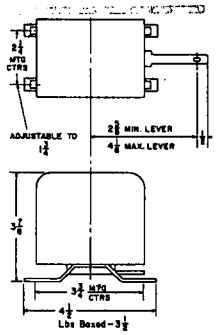

STANDARD DUTY—2 POLE—Open Tank Type—Without Float and Float Rod

Maximum Volts	Horsepower Rating			Operation	Catalog Number	Price
	Polyphase		Single Phase			
	110-220V.	440-550V.	115-230V.			
250	1	---	1	Sump Tank	10038-H23	$8.95
					H24	8.95
600	1	1	1	Sump Tank	H25	11.25
					H26	11.25

DISCOUNT SCHEDULE 2 CD

APPROXIMATE DIMENSIONS AND SHIPPING WEIGHTS

