FROM: J. D. BOYCE

PITTSBURGH OFFICE - 20

TO: MEMORANDUM

SEE DISTRIBUTION

1988 FEBRUARY 17

RE: BNZ CORPORATION - HEADER MATERIAL EEX.2

The only two purchase orders we have placed for this material were with Manville Corporation at $14.09/sq. ft. Production yield, at best, was about 20%.

Having been the most successful aluminum lithium header material tested thus far, Warrick decided to try some. During 1988 January, one header lasted 323 hours, while the other five tests were in the range of 65-70 hours. These preliminary tests convinced Warrick to try a larger scale test with designed experiments in conjunction with XL586 lubricant testing.

In answer to Warrick's request for quotation, BNZ (their first time out) priced EEX.2 at $90.02/sq. foot! We immediately concluded that this pricing was front-end loaded to either recoup scrap losses or charge us for Manville's R&D effort on this program (an obligation to which both agreed).

Dennis Sikora was in Pittsburgh during this period, adding valuable assistance in our negotiations. We called R. J. Milauskas (ATC) to discuss EEX.2 ingredients. Unlike other header materials, EEX.2 has relatively inexpensive raw materials, the key new ingredient of which is exfoliated vermiculite. In our discussion, we asked who owns the "formula". Milauskas said he didn't know, but Steve Libby (ATC) had suggested vermiculite be added to the formula a few years ago. We now assume that vermiculite is the key ingredient, which has made EEX.2 "successful" in both aluminum lithium and Warrick's trials.

Since Steve Libby was unavailable, I then called Glenn Klepac, patent attorney. He stated that Steve Libby had applied for a patent (copy enroute to writer) for the use of vermiculite in casting aluminum. When asked who "owned" the EEX.2 formula, Klepac stated he didn't know for sure. When asked whether we could "give the recipe" to other suppliers, Klepac said he thought it was permissible to do so; Alcoa could analyze the EEX.2 and arrive at a reasonable formulation.

Concurrently, we talked to BNZ's Vice President, John Fisher, telling him we thought the costs were completely out of line, asking him to reconsider his quotation. In addition, we believe

PLAINTIFF'S EXHIBIT
AL-628

we confirmed that any header-size boards would, in fact, be produced from 48 x 96 boards, eliminating the possibility that we were being charged for new dies.

We also had a conference call with Willie Lansdale and Paul Thomas at Warrick. To aid us in negotiating, we asked if we could develop break-even costs of boards. Since pressing at BNZ was scheduled for Wednesday, February 17, we had little time for prolonged negotiation. Because of scheduled designed experiments at Warrick, we needed boards by March 15.

In addition, we informed Mr. Lansdale about our conversation with Alcoa's patent attorney. Mr. Lansdale stated that he had at least three suppliers with whom we have been working that we would talk to concerning adding vermiculite to their test materials. He also said that Minora Lüneburg from West Germany had mentioned using vermiculite in his formula. (This confirms and supports attorney Klepac's contention that much of this information about vermiculite is "public knowledge").

Subsequently, Warrick's ingot industrial engineer, Ed Saiko, gave us information on costs at Warrick. Break even was $35/sq. ft.

Warrick's estimate of maximum total cost for this order was $98,500, based on their requisition. Through negotiation, we finally agreed to a price of $72.00/sq. ft. This represents:

100 pieces - 26 x 48
50 pieces - 26 x 62

This also represents a BNZ "target" of $72.96, or three month's R&D and our "target" of 20% yield of good boards using $14.00/sq. ft. as a base.

We stated that:

- This price applies only for this order

- Warrick is still "committed" to supplying engineering/SPC assistance to BNZ to help them get their processes in control.

- Messers. Lansdale, Owen, and Milauskas will be available to witness/assist during the pressings on this order scheduled for Wednesday, February 17.

Although we were not pleased with our negotiated price, we consider this negotiation a "Pyrrhic victory" for BNZ, at best. Much remains to be done, including our continuing inquiries into world-wide manufacturers of asbestos-containing board products.

We will continue to keep you informed on this project. We solicit your comments or questions.

J. D. BOYCE

JDB/rvg

Distribution:

P. Thomas - Warrick Operations
W. Lansdale - Warrick Operations
D. C. Sikora - Warrick Operations
G. Klepac - ATC-C
R. J. Milauskas - ATC
M. Vrablec\F. E. White - Tennessee Operations
S. S. Owen - Warrick Operations
G. E. Graddy, Jr. - ATC-C
E. L. Rooy - 22 A.B.
T. G. Pollak - 20 A.B.
H. M. Goern - 29 A.B.

Stephen C. Libby and G. Edward Graddy, J
U.S. Serial No. 123,336
Filed Nov. 19, 1987

GPD 88/2/22

CASTING ALUMINUM ALLOYS WITH A MOLD HEADER COMPRISING DELAMINATED VERMICULITE

Field of the Invention

The present invention relates to the casting of aluminum alloys into solid ingot form. More particularly, the invention is a process for continuous casting of aluminum alloys using a mold having a header that is resistant to attack by the molten metal.

Background of the Invention

Processes for continuous direct chill casting of aluminum alloys, including aluminum-lithium alloys, are known in the prior art. For example, Moritz U.S. Patent No. 3,212,142 discloses a process and apparatus for continuous aluminum casting. The apparatus includes a mold having an outer metal shell lined with an annular header or liner of insulating material. The insulating header is made from a composition wherein asbestos fibers are distributed in an inorganic binder.

Asbestos-containing headers have performed satisfactorily in the aluminum industry for many years. However, in recent times, it has become necessary to discontinue usage of asbestos-containing materials because of health concerns. Accordingly, there is presently a need for asbestos-free headers giving aluminum casting performance comparable to headers in which asbestos is present.

It is a principal object of the present invention to provide an aluminum casting process utilizing a mold having a header wherein asbestos is replaced by a suitable substitute material.

A related objective of the invention is to provide a process for casting aluminum-lithium alloys utilizing a header that is resistant to attack by the molten metal.

Additional objectives and advantages of the invention will become readily apparent to persons skilled in the art from the following detailed description of our invention.

Brief Description of the Drawing

The sole Figure is a cross-sectional view of a continuous casting apparatus for performing aluminum alloy casting.

Summary of the Invention

In accordance with the present invention there is provided a process for casting molten aluminum alloys into solid ingot form. The alloy is preferably an aluminum-lithium alloy comprising predominately aluminum and at least about 1 wt% lithium. The alloy also may comprise at least about 1.5 wt% or at least about 2 wt% lithium. The process includes a step wherein the molten alloy is cast in a mold having a header containing delaminated vermiculite. The process is preferably performed continuously and includes a step wherein coolant is continuously applied to the cast ingot.

The header is preferably substantially asbestos-free. A preferred header contains no asbestos and is formed from a mixture comprising about 15-40 wt% lime, about 15-40 wt% siliceous component, about 10-70 wt% delaminated vermiculite, about 0-55 wt% wollastonite, and about 0-10 wt% organic fiber. Vermiculite preferably comprises about 12-25 wt% of the mixture,

more preferably about 12-20 wt%. A particularly preferred mixture comprises about 12-15 wt% vermiculite. The vermiculite may be replaced in whole or in part by spodumene or lithium aluminate.

Wollastonite preferably comprises about 15-55 wt% of the mixture, more preferably about 15-50 wt%. A particularly preferred mixture comprises about 30-50 wt% wollastonite.

When organic fiber is used, it comprises about 1-8 wt% of the mixture. About 2 wt% wood fiber is employed in a particularly preferred mixture.

Lime and the siliceous component each preferably comprise about 15-35 wt% of the mixture, more preferably about 15-25 wt%. A particularly preferred mixture comprises about 23 wt% lime and about 21 wt% silica. After the mixture is formed and heated, the lime and siliceous component combine to form an inorganic matrix comprising calcium silicate hydrate. The matrix preferably has a composition approximating that of tobermorite.

Detailed Description of a Preferred Embodiment

There is shown in the Figure a continuous casting apparatus 10 for direct chill casting of an aluminum-lithium alloy. Molten metal at a temperature of about 716°C (1320°F) is introduced into an interior portion or chamber 12 of the apparatus 10. The metal initially forms a molten pool 14 above a solid ingot or shell 16. The pool 14 and ingot 16 are separated by a solidus line 18. The aluminum-lithium alloy has a solidus temperature of about 593°C (1100°F).

The apparatus 10 also includes a mold comprising an outer metal container 20 and an inner header or liner 22. The header 22 contacts the molten metal pool 14 and insulates the container 20 from the pool 14. The header 22 is kept in place by a clamp or retaining clamp 25 overlying the metal container 20 and an outer portion of the header 22. The clamp 25 is fastened to the container 20 by metal bolts 26, 27 or other preferred attaching means. A spray bar 30 adjacent the mold contains a coolant 32 for lowering temperature of the ingot 16 and lower portions of the metal container 20. The direct chill coolant emerges as a spray 34 from openings 36 in the spray bar 30. For most aluminum alloys, the preferred coolant is water. However, ethylene glycol is utilized for cooling alloys containing more than about 1.5 wt% lithium in order to reduce the risk of explosions.

A parting composition is applied to outer surface portions 40 of the ingot 16 as it forms in the mold. The parting composition is preferably an alpha-olefin oligomer which reduces friction between the mold and such surface portions 40. In the absence of lubrication, the continuously forming ingot would tear on the mold surface. Tears are defects on the ingot surface 40 and they also facilitate bleedouts of molten metal which may come into direct contact with the coolant 34. It is particularly desirable to avoid such bleedouts in casting aluminum-lithium because of the danger posed by explosion.

Additional details of continuous direct chill aluminum-lithium casting processes are found in Laemmle et al

U.S. Patent No. 4,602,670; Tsai et al U.S. Patent No. 4,607,679; and Jacoby et al U.S. Patent No. 4,628,985. The disclosures of such patents are incorporated herein by reference, to the extent consistent with the present invention.

Particularly desirable results in casting aluminum alloys have been obtained with a continuous casting apparatus 10 having an asbestos-free header 22. A particularly preferred header is made by forming an aqueous slurry with a mixture comprising delaminated vermiculite, wollastonite, hydrated lime, finely divided silica, and wood fibers. The slurry is shaped and compressed to expel a large portion of the water and form a densified mixture. The shaped and compressed material is then subjected to an elevated temperature while minimizing evaporation of water. The latter step is preferably performed by placing the shaped product in an autoclave in the presence of steam at superatmospheric pressure. The lime and silica thereby react to form a tobermorite crystalline matrix. Finally, the header is dried at a temperature above the boiling point of water to remove free water.

As used herein, the term "delaminated vermiculite" refers to vermiculite that is delaminated by heating or by any of several known chemical delamination processes. Chemically delaminated vermiculite is particularly preferred. After production, the suspension of chemically delaminated mineral is subjected to a wet-classification treatment in which larger particles of the mineral are removed. For use in making headers suitable for the present invention, the suspension is

wet-classified to an average particle size of less than about 50 microns. Delaminated vermiculite comprises about 10-70 wt% of the mixture, preferably about 10-50 wt% and more preferably about 12-25 wt%.

Wollastonite is a crystalline form of anhydrous calcium silicate. The mixture comprises about 0-55 wt% wollastonite, preferably about 15-55 wt% and more preferably about 30-50 wt%.

Lime comprises about 15-40 wt% of the dry mixture, preferably about 15-35 wt% and more preferably about 15-25 wt%. The lime may be any suitable hydrated lime or quicklime.

The siliceous component of the mixture may be any of a wide variety of substantially pure sources of silica. These may include silica, diatomaceous earth, and similar materials. The siliceous component comprises about 15-40 wt% of the dry mixture, preferably about 15-35 wt% and more preferably about 15-25 wt%.

In a preferred embodiment, the mixture contains, in addition to vermiculite, wollastonite, lime, and silica, up to about 10 wt% of an organic fiber, preferably about 1-8 wt%. The organic fiber may be wood fiber, polyester or other synthetic fiber, cotton or other natural fibers. Wood fiber is particularly preferred. The purpose of the organic fiber is to provide "green strength" to the molded header body prior to its being cured by steam and also to provide stress distribution during drying and curing.

If desired, various other inorganic substances may be added to the dry mixture. Such additives may include spodumene (a mineral containing lithium aluminum silicate), lithium aluminate, and mineral wool.

In a typical example, a dry mixture comprising approximately 23 wt% hydrated lime, 21 wt% silica, 40 wt% wollastonite, 14 wt% delaminated vermiculite, and 2 wt% wood fiber was slurried in about four to five parts water per part of dry mixture. This slurry was then molded in a pressure mold to form a header. The molded header was then cured by autoclaving in saturated steam for several hours at approximately 170°C. The cured header was dried at approximately 110°C to reduce moisture content. The cured and dried header has a crystalline matrix that is predominately tobermorite.

The header described above was found satisfactory for continuous direct chill casting of aluminum alloys, including aluminum-lithium alloys containing more than 1.5 wt% lithium. The header is also suitable for casting alloys containing more than 2 wt% lithium. The cast ingots had excellent surface quality and the process was performed with no bleedouts. Surprisingly, the preferred asbestos-free header described above was found to perform better for casting aluminum-lithium alloys than prior art headers containing asbestos.

Aluminum alloys cast by the process described above generally contain various alloying elements such as copper, magnesium, silicon, zinc, manganese, iron, and combinations thereof. In addition, alloys designated as aluminum-lithium alloys contain at least about 1.0 wt% lithium. For example, aluminum-lithium alloy 2091 contains about 1.8-2.5 wt% Cu; about 1.7-2.3 wt% Li; about 1.1-1.9 wt% Mg; about 0.08-0.16 wt% Zr; 0.20 wt% max Si; 0.30 wt% max Fe; 0.10 wt% max Mn, Cr, and Ti; 0.25 wt% max Zn, and 0.15 wt% max other impurities.

While the invention has been described in terms of preferred embodiments, the claims appended hereto are intended to encompass all embodiments which fall within the spirit of the invention.

What is claimed is:

1. A process for casting into solid ingot form a molten alloy comprising predominately aluminum, said process comprising

(a) casting said molten alloy into a solid ingot in a mold having a header comprising about 10-70 wt% of a material selected from the group consisting of delaminated vermiculite or spodumene or lithium aluminate or mixtures thereof.

2. The process of Claim 1 wherein said alloy comprises at least about 1 wt% lithium.

3. The process of Claim 1 wherein said header is substantially asbestos-free.

4. The process of Claim 1 wherein said header is formed from a mixture comprising about 15-40 wt% lime, about 15-40 wt% siliceous component, about 0-55 wt% wollastonite, and about 10-70 wt% delaminated vermiculite.

5. The process of Claim 4 wherein said mixture further comprises about 0-10 wt% organic fiber.

6. The process of Claim 1 wherein said header is formed from a dry mixture comprising about 15-35 wt% lime, about 15-35 wt% siliceous component, about 15-55 wt% wollastonite, about 10-25 wt% delaminated vermiculite, and about 0-10 wt% organic fiber.

7. The process of Claim 6 wherein said dry mixture comprises about 1-8 wt% organic fiber.

8. The process of Claim 1 wherein said vermiculite is distributed in a matrix comprising calcium silicate hydrate.

9. The process of Claim 1 wherein said vermiculite is distributed in a matrix having predominately a tobermorite composition.

10. The process of Claim 1 wherein said header further comprises about 20-55 wt% wollastonite.

11. The process of Claim 10 wherein said header comprises about 10-50 wt% delaminated vermiculite and about 15-55 wt% wollastonite.

12. The process of Claim 1 further comprising

(b) cooling said ingot.

13. In a process for continuously casting into solid ingot form a molten alloy comprising predominately aluminum and at least about 1 wt% lithium, said process comprising continuously casting said molten alloy in a continuous casting mold having a header,

the improvement wherein said header comprises about 10-70 wt% of a material selected from the group consisting of delaminated vermiculite or spodumene or lithium aluminate or mixtures thereof.

14. The process of Claim 13 wherein said header consists essentially of about 10-70 wt% vermiculite and about 0-55 wt% wollastonite distributed in a matrix comprising calcium silicate hydrate.

15. The process of Claim 13 wherein said header is formed from a mixture consisting essentially of about 15-35 wt% lime, about 15-35 wt% siliceous component, about 15-55 wt% wollastonite, about 10-50 wt% delaminated vermiculite, and about 0-10 wt% organic fiber.

16. The process of Claim 13 wherein said molten alloy comprises at least about 1.5 wt% lithium.

17. The process of Claim 13 wherein said molten alloy comprises at least about 2 wt% lithium.

Abstract of the Disclosure

A process for continuous direct chill casting of aluminum alloys, particularly aluminum-lithium alloys. The molten alloy is cast in a mold containing a header comprising delaminated vermiculite or spodumene or lithium aluminate. The header preferably comprises delaminated vermiculite blended with wollastonite, lime, silica, and wood fiber. The mixture is slurried with water, molded into shape, compressed to expel water, steam cured, and dried. The header forms ingots of good quality and has excellent resistance to attack by molten aluminum-lithium alloys.

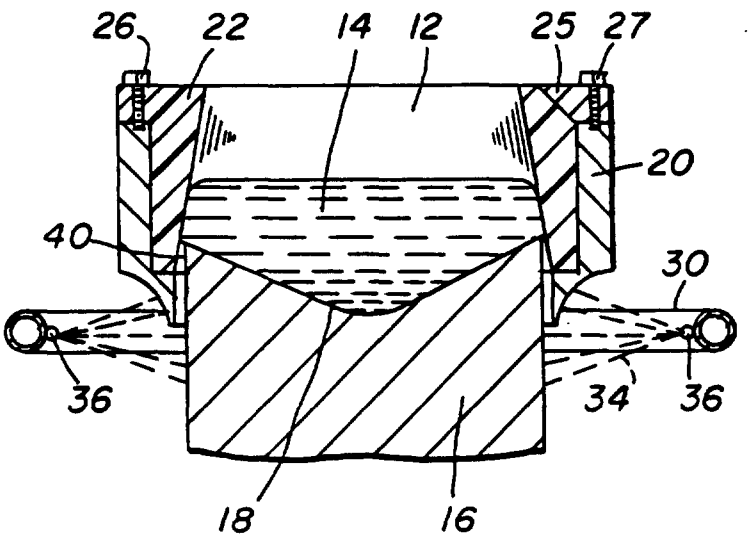
26
22
14
12
25
27
20
40
30
36
34
36
18
16

FROM: T. G. POLLAK
PITTSBURGH OFFICE - 20

TO: MEMORANDUM
SEE DISTRIBUTION

1988 FEBRUARY 08

RE: D. C. SIKORA VISIT - 1988 FEBRUARY 11 (REVISED)

D. C. (Denny) Sikora will be in Pittsburgh on February 11 to spend some time with various buying personnel. Please mark your calendars in accordance with the following schedule:

8:00 - 8:30	T. G. Pollak/D. R. Pattison
8:30 - 9:00	D. C. Monroe
9:00 - 9:30	D. L. Mahrer
9:30 - 10:00	J. P. Jeswald
10:00 - 11:00	J. D. Boyce
11:00 - 11:30	E. P. Cox
11:30 - 12:00	W. K. Benefield
12:00 - 1:30	Lunch (T. G. Pollak)
1:30 - 2:00	J. V. Holder
2:00 - 2:30	R. G. Quaintance
2:30 - 3:00	B. Radko
3:00 - 3:30	Wrapup - T. G. Pollak

T. G. POLLAK

TGP/rvg

ALCOA

PROCUREMENT DEPARTMENT REQUISITION

REQUISITION NUMBER		*REQ. DATE		BUYER	PAGE NO.	AUTH. NUMBER	DATE MATERIAL REQUIRED	DATE SHIP FROM
WA 881121 JP		05FEB88	10:00PM		1		15MAR88	

COMPANY TO BE CHARGED

USE INGOT PLANT

SHIP TO ALUMINUM COMPANY OF AMERICA
WARRICK OPERATIONS
STATE ROUTE 66
NEWBURGH, INDIANA 47630
(FAX: 812-853-1323)

REQUISITION WRITER
LANSDALE 1

SHIP VIA	F.O.B.	TERMS	W. PLANT ISSUANCE
			W. LANSDALE APEX TOOL

GENERAL DESCRIPTION	COMMODITY CODE	ESTIMATED TOTAL COST
		$.00

ITEM NO	QUANTITY	UNIT MEAS	DESCRIPTION AND SPECIFICATIONS	PRICE & UNIT	A: ACCT CODE S: STOCK NO C: COMM. CODE	L: STORES T: TAX CC
1	100	EA	1.1" X 26" X 48" SPECIAL EEX.2 FORMULATED BOARD MATERIAL. (SEE NOTE A)		A	LD 007000
2	100	EA	1.1" X 26" X 62" SPECIAL EEX.2 FORMULATED BOARD MATERIAL. (SEE NOTE A)		A	LD 007000
3	1	EA	THE FOLLOWING REQUIREMENTS ARE THE INITIAL STEPS FOR AN ONGOING SPC PROGRAM FOR THIS PROCESS. (SEE NOTE B)		A	LD 007000
4	1	EA	PROVIDE ALCOA WITH A FORMALIZED SPC PROGRAM AND DESCRIPTION OF MANUFACTURING PROCESS WHICH IS A RESULT OF THE COMBINED INPUT OF ALCOA AND SELLER DERIVED FROM THE ABOVE INITIAL PROGRAM.		A	LD 007000

CONTINUED ON PAGE 2

SPECIAL INSTRUCTIONS:

8

	SURPLUS PITTSBURGH	DATE	STORES

REQUISITIONED BY	DATE	AUTHORIZED APPROVAL	DATE	PROCUREMENT APPROVAL

PRINTED BY THE STANDARD REGISTER COMPANY U.S.A.

SF-29 REV 85-12

CORPORATE RETENTION: THIS COPY BY PROCUREMENT DEPTS. FOR 7 YRS. DESTROY ONLY WITH TAX DEPT. APPROVAL.

PROCUREMENT DEPARTMENT REQUISITION

REQUISITION NUMBER		REQ. DATE		BUYER	PAGE NO.	AUTH. NUMBER	DATE MATERIAL REQUIRED	DATE SHIPM PROMISE
881121			10:00PM		2		15MAR88	

COMPANY TO BE CHARGED

USE

SHIP TO

REQUISITION WRITER

SHIP VIA	F.O.B.	TERMS	IN PLANT DELIVERY LOCATIO

GENERAL DESCRIPTION	COMMODITY CODE	ESTIMATED TOTAL COST

ITEM NO	QUANTITY	UNIT MEAS.	DESCRIPTION AND SPECIFICATIONS	PRICE & UNIT	A - ACCT CODE S - STOCK NO. C - COMM CODE	L - STORES LC T - TAX CODE
5	1	EA	PROVIDE MATERIAL SAFETY DATA SHEETS FOR ALL MATERIALS PRESENT IN EEX.2 MATERIAL.		A	LD 007000
			** TOTAL ESTIMATED COST **	$.00		

NOTES-

A -1. CLEAN ALL EQUIPMENT PRIOR TO PRESSING TO SAFE GUARD AGAINST WHITE SPOTS.

2. PROVIDE TIME TABLE FOR EACH PHASE THAT THE MATERIAL PASSES THROUGH.
DIMENSION TOLERANCES:
FLATNESS - BOW - .250" IN 4 FT.
TWIST - .063" IN 4 FT.
THICKNESS - 1.1" + 0.03 INCHES

B -1. OWNER RESERVES THE RIGHT TO INSPECT THE MATERIAL AT SELLER'S PLANT SITE AT ANY POINT DURING THE MANUFACTURING PROCESS.

CONTINUED ON PAGE 3

SPECIAL INSTRUCTIONS:

						SURPLUS PITTSBURGH	DATE	STORES
REQUISITIONED BY		DATE	AUTHORIZED APPROVAL		DATE	PROCUREMENT APPROVAL		

SF-29 REV 85-12

CORPORATE RETENTION: THIS COPY BY PROCUREMENT DEPTS. FOR 7 YRS. DESTROY ONLY WITH TAX DEPT. APPROVAL.

PRINTED BY THE STANDARD REGISTER COMPANY U.S.A.

PROCUREMENT DEPARTMENT REQUISITION

REQUISITION NUMBER		REQ DATE			BUYER	PAGE NO	AUTH NUMBER	DATE MATERIAL REQUIRED	DATE SHIPMENT PROMISED
881121				10:00PM		3		15MAR88	

COMPANY TO BE CHARGED

USE

SHIP TO

REQUISITION WRITER

SHIP VIA	F.O.B.	TERMS	IN PLANT DELIVERY LOCATION

GENERAL DESCRIPTION	COMMODITY CODE	ESTIMATED TOTAL COST

ITEM NO.	QUANTITY	UNIT MEAS.	DESCRIPTION AND SPECIFICATIONS	PRICE & UNIT	A - ACCT CODE S - STOCK NO C - COMM CODE	L STORES LOC T TAX CODE
			2. SELLER SHALL PROVIDE OWNER WITH FURNACE DATA TAKEN DURING HEAT TREATMENT SHOWING FURNACE TO HAVE AN OXIDIZING ENVIRONMENT PRIOR TO TREATING OF THIS ORDER.			
			3. PROVIDE THE FOLLOWING DATA TAKEN DURING MANUFACTURING OF:			
			3. A. MIXING:			
			1. H20 TEMPERATURE			
			2. AMOUNT OF H20			
			3. TIME IN SLUSHER			
			4. TIME IN JELL TANK			
			5. AMOUNT OF SLURRY FOR EACH BOARD			
			6. THICKNESS OF BOARD AT PRESS			
			7. PRESS PRESSURE			
			8. TIME FOR PRESSING EACH BOARD			
			B. AUTOCLAVING:			
			1. TEMPERATURE			
			2. PRESSURE			
			3. TIME (BRINGING UP/HOLD/BRINGING DOWN			
			3. C. DRYING:			
			1. LOCATION OF BOARDS ON CAR			
			2. TIME/TEMPERATURE AT EACH STAGE			
			CONTINUED ON PAGE 4			

SPECIAL INSTRUCTIONS:

			SURPLUS PITTSBURGH DATE	STORES	D.
REQUISITIONED BY	DATE	AUTHORIZED APPROVAL	DATE	PROCUREMENT APPROVAL	D.

SF 29 REV 85-12

CORPORATE RETENTION: THIS COPY BY PROCUREMENT DEPTS. FOR 7 YRS. DESTROY ONLY WITH TAX DEPT. APPROVAL.

PROCUREMENT DEPARTMENT REQUISITION

REQUISITION NUMBER		REQ. DATE		BUYER	PAGE NO	AUTH NUMBER	DATE MATERIAL REQUIRED	DATE SHIPM PROMISE:
891121			10:00PM		4		15MAR88	

COMPANY TO BE CHARGED

USE

SHIP TO

REQUISITION WRITER

SHIP VIA	F.O.B.	TERMS	IN PLANT DELIVERY LOCATIC

GENERAL DESCRIPTION	COMMODITY CODE	ESTIMATED TOTAL COST

ITEM NO	QUANTITY	UNIT MEAS	DESCRIPTION AND SPECIFICATIONS	PRICE & UNIT	A - ACCT CODE S STOCK NO C COMM CODE L STORES LC T - TAX CODE
			3. OBSERVE BOARDS UPON COMPLETION OF DRYING FOR BOW AND TWIST		
			D. HEAT TREATING:		
			1. LOCATION OF BOARDS ON CAR		
			2. TIME/TEMPERATURE (BRINGING UP/STABILIZED/BRINGING DOWN		
			3. INSPECT BOARDS AFTER HEAT TREATMENT FOR BOW AND TWIST AND THEIR LOCATION (DO ATMOSPHERE STUDY ON AT LEAST ONE FURNACE)		
			E. FINAL INSPECTION:		
			1. INSPECT BOARDS AFTER SANDING OPERATION FOR BOW TWIST OTHER DEFECTS		
C			-ALCOA REPRESENTATIVES SHALL WORK WITH SELLER TO DEVELOP AND IDENTIFY CRITICAL PROCESS PARAMETERS AND ASSIST IN TRAINING AND TECHNICAL SUPPORT OF MEASUREMENT AND CONTROL METHODS.		
D			-ATTN: DENNIS SIKORA		

SPECIAL INSTRUCTIONS.

APEX TOOL W. LANSDALE

SURPLUS PITTSBURGH DATE STORES

REQUISITIONED BY	DATE	AUTHORIZED APPROVAL	DATE	PROCUREMENT APPROVAL
W. LANSDALE	05FEB88			

134F 15FEB

SF 29 REV 85-12

CORPORATE RETENTION: THIS COPY BY PROCUREMENT DEPTS. FOR 7 YRS. DESTROY ONLY WITH TAX DEPT. APPROVAL.

PRINTED BY THE STANDARD REGISTER COMPANY U.S.A.

From: Thomas J. Kasun/John Bohaychick
Surface Technology Division
Alcoa Technical Center - C

To: J. E. Reynolds Warrick

ALCOA Private Information

1988-02-10

RE: 88/02/03 Warrick Trip Report (19F003 p-sheet entitled 'Develop Marinite-free HDC Process for 5182)

The authors visited Warrick on Wednesday 1988, February 03 to discuss details of the stated project. T. D. Plassmeier, W. Lansdale, S.S. Owen, S. T. Davis, and J. A. Nicol represented Warrick ingot plant. The intention of the trip was to gather information for an RPD steering committee report (see attachment 1), and to outline the logistics and priorities of the 1988 program.

The new pumping system for the XL586 was reviewed prior to the meeting. The system has shown the ability to pump the XL586 at 105 ^{o}F in a controlled fashion. Willie plans to perform mold pumping tests and adverse conditions tests on the XL586 and the pumping system prior to a pit trial. He has suggested that a mid to late March time frame would be reasonable for a pit trial of the XL586. The authors will plan to be in attendance for those trials.

The authors prepared a program outline of the areas identified for research in 1988 (see attachment 2). The two major areas in this program were identified as: 1. Liquid Lubricant Reduction, and 2. Eliminate Liquid Lubricants. T. Kasun identified that item 1 had the greatest probability of immediate success, and would require less time to attain noted improvements in header life. It was suggested that the program should concentrate on item 1 until July, at which time a decision will be made to continue with liquid lubricants or to start a concentrated effort on solid lubricants. The group agreed that this would be a suitable approach.

The hypothesis of the potential success of the liquid lubricant reduction portion of the program is that reducing the amount of a liquid with equal or better thermal stability will extend the header life proportionally. In the liquid lubricant reduction project, the following areas were identified as candidates: 1. VI builders and additives (2 to 3 months), 2. Pigmented lubes (3 to 5 months), 3. Thin films/liquid lube (3 to 5 months), and 4. Thermally stable/high VI ATC synthetics (6 to 7 months). The method of screening these concepts will be to run friction and wear bench tests at ATC, followed by ATC DC casting of promising candidates. At this point, the materials that can be used as casting lubricants will have been identified. ATC will then conduct header oil penetration tests and oil water separations tests, while Warrick will perform pump control tests of the candidates. An HDC pit trial of these materials will follow with materials that meet all criteria.

In the solid lubricant project, the concept is that the header degradation will be totally eliminated due to the absence of liquid lubricants. Header degradation will no longer be the cause of mold rebuild. Unfortunately, the next critical item will be the wear life of the solid lubricant. A bench scale test will be established that will predict the mold life with a solid lubricant coating.

A target mold package life was discussed at this point. Present header life on 5XXX series alloy with Metalform or EEX.2 can be as high as 65 to 70 hours. The ultimate mold life would be to match the R528 life which is presently at 300 hrs. The group agreed that this target is unrealistic due to frequent size changes. The target was suggested to increase mold life so that the only reason to rebulid a mold package was to change sizes. The group agreed that this still was a long way off, but it was a more realistic target.

Thomas J. Kasun

John Bohaychick

c. ID, ATC-D
J. T. Laemmle, ATC-C
R. A. Bonewitz, ATC-C
J. E. Jacoby, ATC-B
G. J. Hildeman, ATC-B
R. J. Milauskas, ATC-B
G. E. Graddy, ATC-C
E. L. Rooy, PGH
J. D. Boyce, PGH
P. D. Thomas, Warrick
M. W. Milner, Warrick
S. S. Owen, Warrick
W. Lansdale, Warrick
J. A. Nicol, Warrick
T. D. Plassmeier, Warrick
S. T. Davis, Warrick
J. F. Wells, Warrick

ATTACHMENT 1

From: Thomas J. Kasun
Surface Technology Division
Alcoa Technical Center - C

To: R. A. Bonewitz ATC-C

1988-02-04

RE: Packaging System Group Program Review for p-sheet 19F00350 - Develop Marinite-Free HDC Casting Process for 5182

Per your request in a letter entitled "Packaging Systems Group Project Coordination", dated 88/01/19 the following attachments have been generated for incorporation into the 19F003 p-sheet. Details in these attachments include ongoing work at Warrick along with proposed ATC programs.

The general format is similar to Jay Lyon's example, although the time line is laid out slightly different. Copies of these attachments have also been sent to the members of the steering committee for lubricants. Please feel free to comment on content or format at your convenience.

The author will establish a meeting time with the steering committee in conjunction with the other coordinators of lubricant programs.

Thomas J. Kasun

Thomas J. Kasun

Attachments

cc: ID, ATC-D

J. T. Laemmle	ATC-C
E. B. Perry	PGH-28
N. L. Lawson	ATC-B
E. O. Merklin	PGH- 20
J. E. Reynolds	Warrick

I. CRITICAL BUSINESS MILESTONES

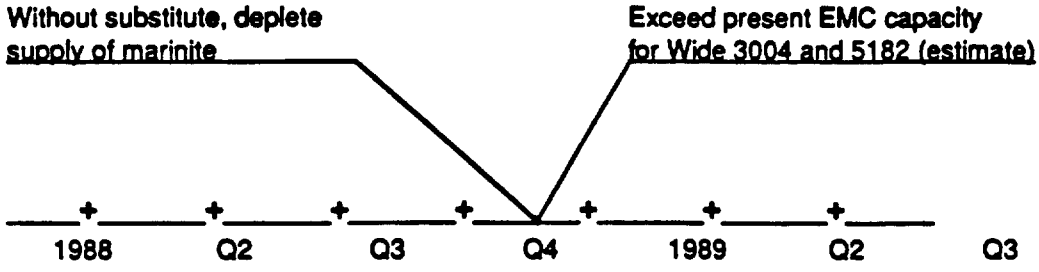

II. MAJOR TECHNICAL TASKS

TASKS		DELIVERABLES	
1.0	**EVALUATE SUBSTITUTE MATERIALS (WAR)**		
1.1	Metalform designed experiment	1.1	Optimized metalform casting process
1.2	Obtain Thermolite headers/casting trial	1.2	Test/evaluation documents
1.3	Obtain EEX-2 headers/casting trial	1.3	Test/evaluation documents
1.4	EEX-2 designed experiment	1.4	Optimized EEX-2 casting process
1.5	Coated steel header/proof of concept (ATC)	1.5	Test/evaluation documents
1.6	Identify and test other materials	1.6	Test/evaluation documents
2.0	**0.625" FINGERHOLD SPACED MOLD (WAR)**		
2.1	Metalform casting trial	2.1	Test/evaluation documents
3.0	**STAINLESS SPACER TRIAL (WAR)**		
3.1	Casting trial of spacer concept	3.1	Test/evaluation documents
4.0	**TRIAL OF XL586 TECHNOLOGY (WAR)**		
4.1	Develop controlled application system	4.1	Application system
4.2	Adverse conditions pumping test	4.2	System capability document
4.3	HDC casting trial of XL586	4.3	Performance verification
4.4	Economic study of XL586 process	4.4	Implentation justification
4.5	Implement XL586	4.5	Process qualification

tjk 88/02/05

II. MAJOR TECHNICAL TASKS

TASKS		DELIVERABLES	
5.0	**LIQUID LUBRICANT REDUCTION (ATC)**		
5.1	Establish baseline on bench test	5.1	Test procedure and document
5.2	Alternate liquid lubricants		
5.21	TGA of alternatives (ATC synthetics, VI builders, additives, pigments)	5.21	List of thermally stable lubes
5.22	Bench test remaining liquid candidates	5.22	List of lubes for ATC caster trial
5.23	ATC caster trial	5.23	List of lubes for Warrick trial
5.24	Header oil penetration test	5.24	Quantified header attack
5.25	Oil from water separations test	5.25	Verified separations capability
5.26	Pumpability tests (WAR)	5.26	Verification of pump control
5.27	Adverse conditions pumping test (WAR)	5.27	System capability document
5.28	HDC casting trial of lubes (WAR)	5.28	Performance verification
5.3	Thin film/liquid lubricant synergy		
5.31	Obtain thin films on test specimen	5.31	Test specimens with thin film
5.32	Obtain thin film on ATC mold	5.32	ATC mold with thin film
5.33	Bench test with present lubes	5.33	Concept Verification
5.34	ATC caster trial	5.34	Recommendation for Warrick trial
5.35	Obtain thin film on Warrick mold	5.35	Warrick mold with thin film
5.36	HDC casting trial of thin film	5.36	Performance verification
6.0	**ELIMINATE LIQUID LUBRICANTS (ATC)**		
6.1	Identify potential candidates	6.1	List of potential materials
6.2	Obtain specimens with coatings	6.2	Coated test specimens
6.3	Establish friction and wear test	6.3	Test procedure
6.4	Bench test coated specimens	6.4	Estimated coating life
6.5	Perform economic evaluation	6.5	Decision to continue

19F003 Develop Marinite-Free HDC Casting Process for 5182 (Kasun)

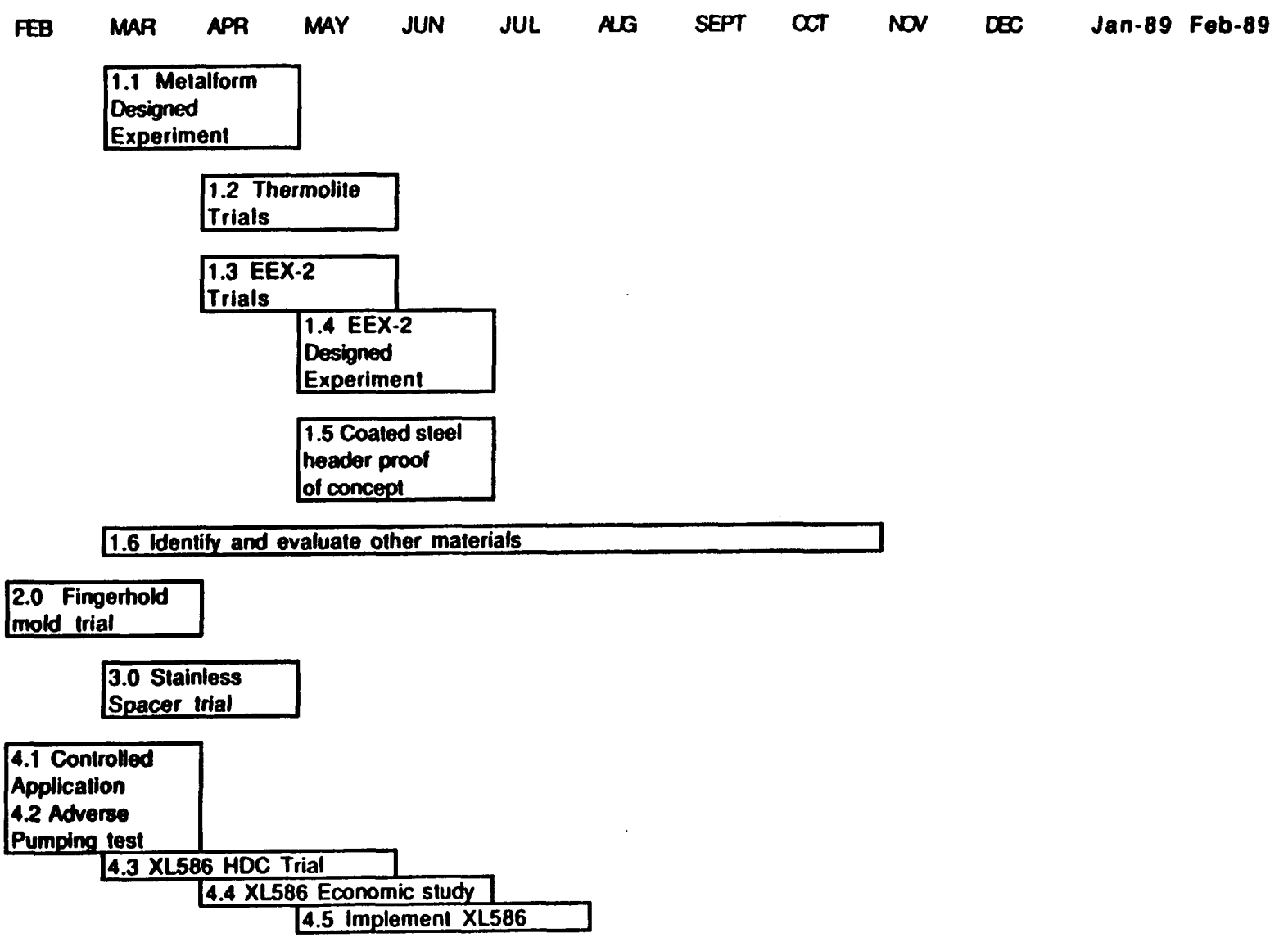

19F003 Develop Marinite-Free HDC Casting Process for 5182 (Kasun)

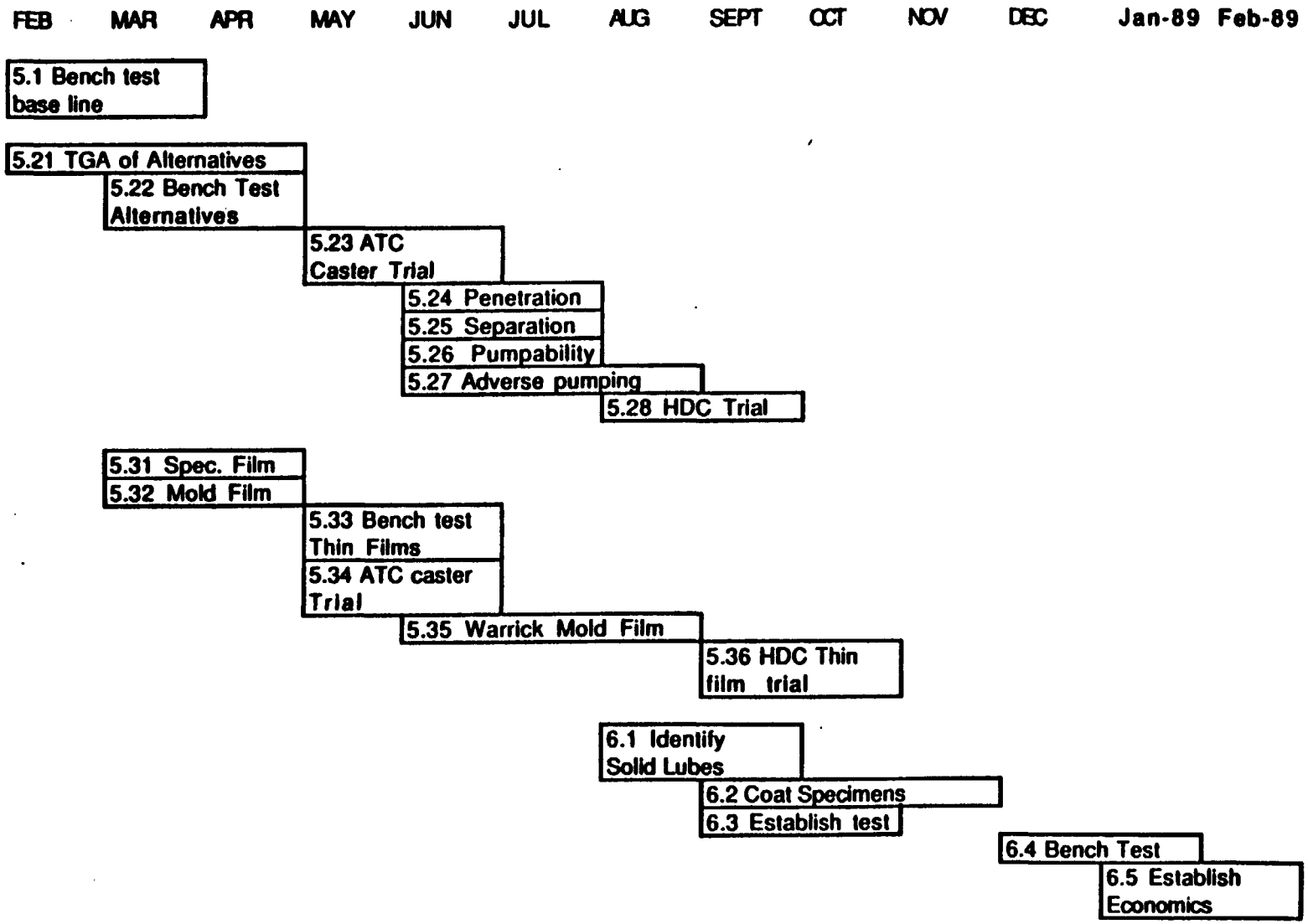

ATTACHMENT 2

19F00350 Develop Marinite-Free HDC Casting Process for 5182

Basis: Reduction or elimination of liquid lubricants will extend header life.

Bench Tests: Mofiss, SRV, Spin Test
Pilot Tests: 4.44" diameter DC caster, MMP division, ATC
Plant Trials: Warrick HDC unit

1. XL2783 Family

    a. Pumping equipment development
    b. Trial of XL586
    c. Bench test of XL1286

2. Develop new high VI, thermally stable synthetics

    a. Synthesis
    b. Evaluate chemical and physical properties
    c. Bench/Pilot/Plant, if appropriate

3. Evaluate Viscosity Builders/Additives

    a. Commercial thickeners
    b. Conventional additives
    c. Formulation development
    d. Bench/Pilot/Plant

4. Thin films (to reduce lubricant consumption)

    a. Obtain films
    b. Bench/Pilot/Plant

5. Solid Lubricants (to eliminate liquids)

    a. Obtain coatings
    b. Bench/Pilot/Plant

T. Kasun/J. Bohaychick
1988/01/29

CORPORATE HEADQUARTERS
2501 South Raritan Street
Englewood, CO 80110
Phone (303) 922-4562
FAX (303) 934-5581

PLANT LOCATIONS

Billerica
High Street
Iron Horse Park
North Billerica, MA 01862
Phone (617) 663-3401

Nashua
40 Bridge Street
P.O. Box 643
Nashua, NH 03061
Phone (603) 883-3361
FAX (603) 889-8935

Zelienople
Front Street
P.O. Box 190
Zelienople, PA 16063
Phone (412) 452-8650
FAX (412) 452-1346

BNZ Materials, Inc.

January 25, 1988

1/27

RECEIVED
JAN 27 1988
T. G. ROLLAK

Mr. Dennis Boyce, Procurement Specialist
Aluminum Company of America
1501 Alcoa Building
Pittsburgh, PA 15219

Dear Dennis:

Thanks for the business! BNZ Materials was formed with the help of your continuing support for our product lines. In 1988 our goal is to increase our market share and to expand our business with you.

Your reaction to this goal probably is, "O.K., tell me how you're going to do this?" The answer to this question is "We'll listen." You are our eyes and ears in the market place. We need your input for direction. You help us in defining direction and we'll supply the products, service and support required to expand our mutual business.

Another question you may have is "What does BNZ bring to the party?" BNZ offers the same excellent quality products, service and sales personnel which Manville has offered in the past. In addition BNZ offers added dimensions for you - our ability to react quickly, your ability to be more competitive using our products and a much narrower, more directed marketing focus. For the immediate future IFB and Marinite are our primary business. We will devote all of our time and efforts to these two products. A good analogy for this is that BNZ will use the rifle not the shotgun approach in marketing.

I'm writing this letter to solicit your help. We are a new company and we need your input and support to succeed. We will listen to any constructive suggestion you have regarding mutually increasing our business. Some areas which we'd like to investigate are:

1. business we've lost to competition for whatever reason
2. pricing vs. volume in your markets - lets evaluate new incremental business on a case by case basis.
3. business we can't get because of product deficiencies
4. joint efforts which will enhance your image/visibility, our image/visibility

5. new products BNZ should consider offering - how we should expand to compliment you in the future
6. anything else you can think of which represents plus business for us - we'll listen

I will be contacting you personally within the next two weeks. Any questions you have concerning BNZ, our direction or our people, I will be glad to answer. I would like concrete ideas and areas where we can begin to work. Also if there are any skeletons in the closet lets get them out of the way. We're not the enemy, we're on your team. I look forward to working with you and your staff in 1988.

Sincerely,

Russell Smith, Jr.

RS:rmo

$72.00/ft²=

62424.	100	624.24	26×48
40320	50	806.40	26×62
102,744			

CVO Rusty Smith 88/2/12

Call Kleper
Steve Libby

Borden strand $388/hr
mach header 56

55"
$60

Milanshas ingredients in EEX2
does Manville own the formula

323 hr on EEX.2 (300#), 800 on MMM
ave 78 hr on 5XXX

pressing to size?
front-end loading?
85 ea 26x48 } for designed
20 ea 26x62 } experiment
have time — need late March date
need NLT 15 Mar
Why is price merited?

We have always been charged for special inspection

front end loaded

cut fm bd or pressed to size

SPC $ included

die charges

why is price merited

John Fisher

blanket order

$/ft²		26×62	26×48	30×71
$ 90.01	100	$1010.00	782.00	
72.96/ft²	200	818.61	633.69	
67.27	300	754.77	584.27	

only way to get $56/ft² need batch price

$98500 with willing to 90.00 { 100 small 20 big

$79300

50 pcs @ $72.96

$72.96 ②

① only for this order how much R&D in the price?

② still offering WIP assistance if price come down

③

7 ingredients

8:00 - TOM POLLACK

* Pulp - Wood (Burmont for insulation)
* VERMICULITE
BNZ - * WOLLASNITE { CALCIUM SILICATE - Natural ~~CO~~ occurring mineral Fibrous Na
CALCIUM SILICATE - Synthetic

EEX.2 is cheaper than Metal form

Who owns formula - Vermiculite Idea was from Steve Libby at ATC - (Clippick is his supervisor in Patten Attorney)

Metal form formula - with Vermiculite substituted

ED SAIKO

$22 TO $25 / SF 35 / SF BREAKEVEN

MOLD CHANGE - VS MOLD LIFE 45 TO 50 hr metal form
60 - 70 EEX.2
60-65

2¢/# of metal not produced = $388 / Down time hr x 3 hr mold change

$22.31/hr 9 MH to rebuild mold

350 to 400 Hrs is max. on sun time life for any mold

+ $80 Material etc Metal form $415 / mold 26x62"

120" of scrap ingot = @ 3.5¢/# x 10,000# =

$380
268 = 12hr x 22.31/hr
80 Material
350

22.31
.2
4462
2231
26772

2.17 X 5.17 = 11.22 ft²	45 pcs/mnth	505 ft²/mnth
2.17 X 4 = 8.68 ft²	25 pcs/mnth	217 ft²/mnth
		722 ft²/mnth

	price/ft²	Cost for 722 ft²/mnth
	$22	$15884
WA target	25	18050
	28	20216
	30	21660
WA breakeven	35	25270
	40	28880
BNZ	56	40432

67,900

$179,200 @ $90/ft² for (868 + 1122) = 1990 ft²
125,000 R&D, 6 mnths.
54,200 bal. @ $27.23 for 1990 ft²

179,250
67900
111,300 55.93/ft²

~~John Fisher~~ Rusty Smith

Covers 6 mo of R&D
if BNZ never gets another order

1 PO for EEX.2 in 1987

1 PO 1988

BNZ target price $56/ft² for 4x8 sheets

how many orders fm WA in 1988 (pcs)

made committment to alcoa

if it works,
70 pcs/mo total
2/3 62x26
1/3 48x26

Inventory 1986
lived off inv.
in 1987

76%
other than Marinite

76% Dec '87
75% Jan '88

6
strands
8 routinely

45-50 hr Metalform
60-65 hr EE x.2

Ed Saiko

$22-25/ft²

$35 breakeven

380

The downtime / stand
3 hr to chg mold

$22.31/hr
9 mhr to rebuild mold
misc matl
metalform 28 x 62

.035/LB
10,000 LB / 20 in of scrap ingot
before we know the mold
is bad

80

415

350-400 hr top limit

FROM GLENN E. KLEPAC
PATENT DIVISION
ATC-C

TO DR. PETER R. BRIDENBAUGH
ATC-C

February 2, 1988

RE: SECRECY AND NON-DISCLOSURE AGREEMENT WITH BNZ MATERIALS, INC. (88-0041)

I am pleased to enclose for your signature two copies of a new Agreement with BNZ Materials, Inc. This company is operated by several former employees of Manville Corporation and has acquired three Manville operating locations including their facility at North Billerica, Massachusetts. The North Billerica location supplies Alcoa with header materials for continuous casting.

This Agreement continues Alcoa's relationship for development of header materials for two more years with protection for information belonging to both parties. The Agreement does not unduly restrict Alcoa, and I recommend that it be signed.

If satisfactory, please sign and date both copies where indicated and return them to me.

Glenn E. Klepac

GLENN E. KLEPAC

GEK:med

Enclosures

cc: J. D. Boyce - Pittsburgh, 19
R. H. Katila - Pittsburgh, 12
R. J. Milauskas - ATC, B

RECEIVED
FEB 03 1987
T. G. POLLAK

ALCOA

PATENT DIVISION, LEGAL DEPARTMENT

FROM GLENN E. KLEPAC
PATENT DIVISION
ATC-C

TO MR. ROBERT J. MILAUSKAS
CERAMICS
ATC-B

January 26, 1988

RE: SECRECY AND NON-DISCLOSURE AGREEMENT WITH BNZ MATERIALS, INC. (88-0041)

On Friday, John Fischer of BNZ Materials, Inc. told me that BNZ is willing to enter into a new Agreement having a two-year term. Mr. Fischer also thought that Manville would agree to maintain the three existing Agreements in effect, so long as Manville employees are performing research work for BNZ.

Enclosed is a revised draft of the Agreement with BNZ. Please let me know at your earliest convenience whether this draft appears acceptable.

GLENN E. KLEPAC

GEK:med

Enclosure

cc: (enclosure)
J. D. Boyce - Pittsburgh, 19
R. H. Katila - Pittsburgh, 12

GEK:med

01/26/88

SECRECY AND NON-DISCLOSURE AGREEMENT

THIS SECRECY AND NON-DISCLOSURE AGREEMENT (the "Agreement") is made and entered into effective the 1st day of January, 1988, by and between BNZ MATERIALS, INC., a Delaware corporation ("BNZ") whose address is 2501 South Raritan Street, Englewood, Colorado 80110, and ALUMINUM COMPANY OF AMERICA, a Pennsylvania corporation ("Alcoa") whose address is 1501 Alcoa Building, Pittsburgh, Pennsylvania 15219.

RECITALS

A. BNZ has entered into an Agreement for Purchase and Sale of Assets, dated as of September 15, 1987, with Manville Sales Corporation, a Delaware corporation ("Manville"), providing for the purchase by BNZ of the business operations of three Manville facilities at the following locations: Nashua, New Hampshire; Billerica, Massachusetts; and Zelienople, Pennsylvania. BNZ intends to continue existing operations at the three plant locations, including the production of products and the use of industrial processes and proprietary technical information covered by this Agreement.

B. Previously, Alcoa and Manville (or Manville's predecessors) have entered into two Secrecy Agreements and a Non-Disclosure Agreement providing for the confidentiality of particular industrial processes and related proprietary technical information. The Secrecy Agreements and Non-Disclosure Agreement between Alcoa and Manville will subsequently and collectively be referred to in this Agreement as the "Prior Secrecy Agreements".

C. As more specifically set forth in the Prior Secrecy Agreements, Manville and Alcoa have cooperated to develop refractory products for use by Alcoa for casting aluminum and aluminum alloys and in Alcoa's HDC Horizontal Continuous Casting process, or for use in connection with Manville's production process involving Header Grade Materials. The foregoing industrial processes and all accompanying proprietary technical information, together with related industrial processes and proprietary technical information and such other industrial processes and accompanying proprietary technical information as the parties may specifically designate in writing, will subsequently be referred to in this Agreement as "Confidential Information".

D. In continuing the industrial operations at Billerica, Massachusetts, BNZ desires to continue to make use of the Alcoa Confidential Information and Alcoa desires to continue to make use of the Manville Confidential Information which BNZ now may lawfully use. Accordingly,. BNZ and Alcoa have agreed to

enter into this Agreement for the purpose of reaffirming the basic provisions and mutual protections contained in the Prior Secrecy Agreements.

AGREEMENTS

NOW, THEREFORE, in consideration of the foregoing Recitals and the mutual terms and conditions of this Agreement, and for other good and valuable consideration the receipt and sufficiency of which are hereby acknowledged, the undersigned parties covenant and agree as follows:

1. Confidentiality and Non-Disclosure. All Confidential Information revealed by either Alcoa or BNZ to the other shall be:

(a) Disclosed by the receiving party only to its employees having a need to know such Confidential Information to carry out the business activities underlying this Agreement, with such employees informed of its confidential nature and their obligation of non-disclosure;

(b) Received and maintained in confidence by the receiving party and not disclosed, directly or indirectly, to any third party without the express written consent of the disclosing party, except as permitted in subparagraph (a) above.

2. Limitations on Use. Alcoa and BNZ hereby agree that all Confidential Information revealed pursuant to this Agreement by Alcoa to BNZ shall be used by BNZ only for the purpose of working with Alcoa to develop and manufacture such refractory

products and to submit the price quotations thereon, or for such other purposes as Alcoa and BNZ may agree upon in writing. In addition, the receiving party will ensure that all Confidential Information provided to that receiving party will not be reproduced in any manner except as necessary for the receiving party's technical evaluation and for use in conformity with the purposes of this Agreement.

3. Oral or Observed Confidential Information. All Confidential Information disclosed orally or by observation shall be confirmed or identified in writing as Confidential Information by the party desiring to bring such information within the scope of this Agreement.

4. Return of Documentary Confidential Information. At any time, the disclosing party may request all Confidential Information previously furnished to the receiving party in documentary form be returned, and the receiving party agrees that it will promptly do so in the manner requested by the disclosing party.

5. Excluded Information. The restrictions contained in this Agreement on the disclosure and use of Confidential Information shall not apply to any Confidential Information which:

(a) Now or hereafter becomes available to the public without any breach of this Agreement by the receiving party;

(b) Already was in the possession of the receiving party at the time of disclosure hereunder as demonstrated by competent evidence;

(c) Becomes available to the receiving party after disclosure hereunder from a third party who did not acquire it directly or indirectly under an obligation of confidentiality.

6. Manville Breach of Prior Secrecy Agreements. Any breach of the Prior Secrecy Agreements by Manville will not constitute a breach of this Agreement or thereby give rise to any liability on the part of BNZ to Alcoa.

7. Non-Assignability. This Agreement shall inure to the benefit of and be binding upon the parties hereto, their successors and assigns. However, this Agreement or any benefits or obligations hereunder may not be assigned by either party without the prior written consent of the non-assigning party and then only in the manner and to the extent specified in such consent.

8. Termination. Unless sooner terminated, this Agreement shall expire on December 31, 1989. Notwithstanding the foregoing, either party may terminate this Agreement by the giving of thirty (30) days' written notice of its intention to terminate. The provisions of this Agreement governing the non-disclosure of Confidential Information shall survive and remain enforceable until December 31, 1991, or for a period of

two (2) years after termination of this Agreement, whichever is sooner.

IN WITNESS WHEREOF, the undersigned parties have executed this Agreement effective as of the day and year first written above.

BNZ: BNZ MATERIALS, INC., a Delaware corporation	ALCOA: ALUMINUM COMPANY OF AMERICA, a Pennsylvania corporation
By_____	By_____
Title_____	Title Vice President
Date_____	Date_____

Manville Corporation
Post Office Box 510[illegible]
Denver, Colorado 8[illegible]217-5[illegible]
303 978-2000

Manville

JPB 12/3

November 25, 1987

Dennis Boyce
Aluminum Company of America
1501 Alcoa Building
Pittsburgh, PA 15209

Re: ASSIGNMENT OF [illegible] CORPORATION TO
BNZ [illegible]

12/3

Ron H. Katila - 13AB

Here are 3 separate assignments as I requested. Pls review & let me know if OK — who shud sign?

Re: my ltr to Manville dtd 87Sep16

JPB x4532

reement for
ıc. dated
:ties located
usetts; and
gnment,
en executed
ıc. Please
Agreements
the

ıible

Al [illegible] letter of introduction from BNZ Materials, In[illegible]troducing the officers of BNZ Materials, Inc. and giving you additional information about the company. Please note this Assignment is contingent upon Manville closing this sale to BNZ Materials, Inc. The closing is currently scheduled for December 2, 1987.

If you should have any questions regarding the enclosed, please feel free to contact me at 303-978-4927 or Shirley Levy at 303-978-2342.

Very truly yours,

Mary Ann Krawchuk

Mary Ann Krawchuk
Assistant Secretary and Counsel

Encs.

47/1891H

T-12/30

CORPORATE HEADQUARTERS

2501 South Raritan Street
Englewood, CO 80110
Phone (303) 922-4562
FAX (303) 934-5581

PLANT LOCATIONS

Billerica
[illegible]
[illegible]
North Billerica, MA 01862
Phone [illegible] 663-3401

Nashua
[illegible] Street
P.O. Box [illegible]
Nashua, NH 03061
Phone (603) 883-3361
FAX [illegible] 889-8935

Zelienople
Front Street
P.O. Box 190
Zelienople, PA 16063
Phone (412) 452-8650
FAX (412) 452-1346

BNZ Materials, Inc.

JSB 12/7

12/8 gc: RH Katila - BAB for review; you already have - there info on this

JS

December 2, 1987

Mr. Dennis Boyce
Aluminum Company of America
1501 Alcoa Building
Pittsburgh, PA 15219

Dear Dennis:

Enclosed herewith is the original draft of a proposed Secrecy and Nondisclosure Agreement between BNZ and Alcoa.

As you will note from the agreement, we have attempted to incorporate provisions that were included in the earlier agreements which we feel would be acceptable to Alcoa.

We would appreciate it if you would review the enclosed and if you find it in acceptable form, please sign and return to me.

Thank you in advance for your cooperation in this matter.

Sincerely,

BNZ MATERIALS INC.

John

John L. Fischer

JLF:cd
cc: Mr. Jerry Dukes

SECRECY AND NONDISCLOSURE AGREEMENT

THIS SECRECY AND NONDISCLOSURE AGREEMENT (the "Agreement") is made and entered into effective the ____ day of December, 1987, by and between BNZ Materials, Inc., a Delaware corporation ("BNZ") whose address is 2501 South Raritan Street, Englewood, Colorado 80110, and Aluminum Company of America, a Pennsylvania corporation ("Alcoa"), whose address is 1501 Alcoa Building, Pittsburg, Pennsylvania 105219.

RECITALS

A. BNZ has entered into an Agreement for Purchase and Sale of Assets, dated as of September 15, 1987, with Manville Sales Corporation, a Delaware corporation ("Manville"), providing for the purchase by BNZ of the business operations of three Manville facilities at the following locations: Nashua, New Hampshire; Billerica, Massachusetts; and Zelienople, Pennsylvania. BNZ intends to continue existing operations at the three plant locations, including the production of products and the use of industrial processes and proprietary technical information covered by this Agreement.

B. Previously, Alcoa and Manville (or Manville's predecessors) have entered into two Secrecy Agreements and a Nondisclosure Agreement providing for the confidentiality of particular industrial processes and related proprietary technical information. The Secrecy Agreements and Nondisclosure Agreement between Alcoa and Manville will subsequently and collectively be referred to in this Agreement as the "Prior Secrecy Agreements."

C. As more specifically set forth in the Prior Secrecy Agreements, Manville and Alcoa have cooperated to develop refractory products for use by Alcoa for casting aluminum and aluminum alloys and in Alcoa's HDC Horizontal Continuous Casting process, or for use in connection with Manville's production process involving Header Gray Materials. The foregoing industrial processes and all accompanying proprietary technical information, together with related industrial processes and proprietary technical information and such other industrial processes and accompanying proprietary technical information as the parties may specifically designate in writing, will subsequently be referred to in this Agreement as "Confidential Information."

D. In continuing the industrial operations at Billerica, Massachusetts, BNZ desires to continue to make use of the Alcoa Confidential Information and Alcoa desires to continue to make use of the Manville Confidential Information which BNZ now may lawfully use. Accordingly, BNZ and Alcoa have agreed to enter into this Agreement for the purpose of reaffirming the basic provisions and mutual protections contained in the Prior Secrecy Agreements.

AGREEMENTS

NOW, THEREFORE, in consideration of the foregoing Recitals and the mutual terms and conditions of this Agreement, and for other good and valuable consideration the receipt and sufficiency of which are hereby acknowledged, the undersigned parties covenant and agree as follows:

1. **Confidentiality and Nondisclosure.** All Confidential Information revealed by either Alcoa or BNZ to the other shall be:

(a) Disclosed by the receiving party only to its employees having a need to know such Confidential Information to carry out the business activities underlying this Agreement, with such employees informed of its confidential nature and their obligation of nondisclosure;

(b) Received and maintained in confidence by the receiving party and not disclosed, directly or indirectly, to any third party without the express written consent of the disclosing party, except as permitted in subparagraph (a) above.

2. **Limitations on Use.** Alcoa and BNZ hereby agree that all Confidential Information revealed pursuant to this Agreement by Alcoa to BNZ shall be used by BNZ only for the purpose of working with Alcoa to develop and manufacture such refractory products and to submit the price quotations thereon, for use in Alcoa's HDC Horizontal Continuous Casting process, or for such other purposes as Alcoa and BNZ may agree upon in writing. In addition, the receiving party will ensure that all Confidential Information provided to that receiving party will not be reproduced in any manner except as necessary for the receiving party's technical evaluation and for use in conformity with the purposes of this Agreement.

3. **Oral or Observed Confidential Information.** All Confidential Information disclosed orally or by observation shall be confirmed or identified in writing as Confidential Information by the party desiring to bring such information within the scope of this Agreement.

4. **Return of Documentary Confidential Information.** At any time, the disclosing party may request all Confidential Information previously furnished to the receiving party in documentary form be returned, and the receiving party agrees that it will promptly do so in the manner requested by the disclosing party.

5. **Excluded Information.** The restrictions contained in this Agreement on the disclosure and use of Confidential Information shall not apply to any Confidential Information which:

(a) Now or hereafter becomes available to the public without any breach of this Agreement by the receiving party;

(b) Already was in the possession of the receiving party at the time of disclosure hereunder as demonstrated by competent evidence;

(c) Becomes available to the receiving party after disclosure hereunder from a third party who did not acquire it directly or indirectly under an obligation of confidentiality.

6. **Manville Breach of Prior Secrecy Agreements.** Any breach of the Prior Secrecy Agreements by Manville will not constitute a breach of this Agreement or thereby give rise to any liability on the part of BNZ to Alcoa.

7. **Nonassignability.** This Agreement shall inure to the benefit of and be binding upon the parties hereto, their successors and assigns. However, this Agreement or any benefits or obligations hereunder may not be assigned by either party without the prior written consent of the nonassigning party and then only in the manner and to the extent specified in such consent.

8. **Termination.** Unless sooner terminated, this Agreement shall expire on December 31, 1988. Notwithstanding the foregoing, either party may terminate this Agreement by the giving of thirty (30) days' written notice of its intention to terminate. The provisions of this Agreement governing the nondisclosure of Confidential Information shall survive and remain enforceable until December 31, 1990, or for a period of two (2) years after termination of this Agreement, whichever is sooner.

IN WITNESS WHEREOF, the undersigned parties have executed this Agreement effective as of the day and year first written above.

BNZ:

BNZ MATERIALS, INC., a Delaware corporation

By:_____
Title

ALCOA:

ALUMINUM COMPANY OF AMERICA, a Pennsylvania corporation

By:_____
Title

No. 26832

CONTRACT

Secrecy Agreement

FOR Header Grade Materials

WORKS

MADE WITH Johns Manville

MADE BY Alcoa

DATE OF CONTRACT May 23, 1975

EXPIRES 5 years

REMARKS

IMPORTANT: When finished with this contract, return to Aluminum Company of America Central Purchasing Department, Pittsburgh Headquarters

1251

FROM JOHN P. TAYLOR

ALCOA TECHNICAL CENTER - C

TO DR. R. G. LA BAR
INGOT CASTING DIVISION
ALCOA TECHNICAL CENTER - B

October 6, 1975

RE
OCT 9 1975
PURCHASING

RE: JOHNS-MANVILLE NON-DISCLOSURE AGREEMENT

I have reviewed the non-disclosure agreement with Johns-Manville Corporation dated May 23, 1975 with respect to your question as to its pertinency to the subject matter of the patent application (74-265) we are preparing.

In my judgment, the non-disclosure agreement is not worded sufficiently broad to cover the subject matter of the patent application. Therefore, I would not disclose any details relating to the patent application to Johns-Manville.

As I interpret the agreement, the term "information" as used therein relating to Alcoa, relates to a horizontal continuous casting process while the term as applied to Johns-Manville relates to proprietary refractory materials. The subject matter of the patent application relates to refractory materials for use with the process, not the process itself. Hence, the definition in the agreement as applied to Alcoa is probably too narrow to include materials and machines associated with the process. The persons who request and/or draft these agreements should be mindful of the import of words being used from a technical standpoint.

If you feel that it would be in Alcoa's best interest to disclose information to Johns-Manville relating to the refractory materials themselves rather than the process with which they will be used, the agreement should probably be modified to include a broader definition of what is deemed to be confidential information of Alcoa.

JOHN P. TAYLOR

JPT:cdb

OCT 07 1975

ALCOA

PATENT DIVISION, LEGAL DEPARTMENT

FORM 8372 SM 8/73

PITTSBURGH PURCHASING

INDUSTRIAL MATERIALS - 19

MR. T. H. FALLWELL

WARRICK OPERATIONS

06JUN75

RE: NONDISCLOSURE AGREEMENT WITH JOHNS-MANVILLE

Attached is a copy of the referenced nondisclosure agreement for your file. A copy of this agreement is also attached to Mr. P. C. Scheble's copy of this letter.

M. J. CAPRIO

MJC:gih

cc: P.C. Scheble - Warrick

Attachment

Johns-Manville
Sales Corporation

Industrial Products Division

Greenwood Plaza
Denver, Colorado 80217
(303) 770-1000

June 3, 1975

Mr. M. J. Caprio
Aluminum Company of America
Alcoa Building
Pittsburgh, Pa. 15219

Dear Mario:

Returned herewith is Alcoa's copy of the non-disclosure agreement signed by Dick Stapleton. This should permit our joint development of a header grade material to procede unhampered.

I look forward to seeing you next at our June 17th meeting at Warrick and possibly on the evening of the 16th.

Sincerely,

Carl

Carl P. Weber
Product Manager

CPW:cc

Encs.

27MAY75

Mr. C. P. Weber
Johns-Manville Sales Corporation
Zelienople, Pennsylvania 16063

Reference: Non-Disclosure Agreement

Dear Carl:

Attached are two copies of the non-disclosure agreement which we have revised in accord with Johns-Manville's recommended changes. As soon as your people have approved and signed both copies, please return the original to my attention.

We have firmed June 17, 1975 for our next meeting at Warrick, Indiana on Molten Metal Marinite. At that time we may have some input from Alcoa with respect to their plans in participating in a joint effort to improve Billerica's f facilities to produce header grade Marinite.

Sincerely yours,

M. J. Caprio
Senior Staff Buyer
Industrial Materials

MJC:gih

Attachments

RECEIVED
MAY 14 1975
PURCHASING

write letter on our nondisclosure agree

April 30, 1975

Mr. M. J. Caprio
ALCOA
Alcoa Building
Pittsburgh, Pa. 15219

Dear Mario:

RE: SECRECY AGREEMENT BETWEEN ALCOA AND J-M

We have had our people here at Johns-Manville review the "revised" secrecy agreement that was submitted to us by you. In total, this agreement appears to be satisfactory to us. Some minor changes were made with the thought of keeping paperwork and record keeping to a minimum.

Enclosed are two copies of this agreement. If they are satisfactory to Alcoa, we would appreciate the Alcoa people signing them both and sending them to us and we will sign both and return one to you so that we each have a copy on file.

Also, for your convenience, I am returning the original Alcoa write-up of the secrecy agreement with the areas marked where minor changes were made. I hope this finalizes things as I think this arrangement will prove to be beneficial to both Alcoa and J-M, and you can't beat that.

Very truly yours,

H. E. Konrad
Marketing Manager

HEK:cc

Encs.

bcc: R. A. Stapleton
C. J. DeBiase
C. P. Weber
J. W. McClain - 5W

Mario -
Hope this gets to you this time. Seems our Red Tape should be enough of a challenge without fighting the US Postal service besides.
Regards -
Howard

17APR75

Dr. H. E. Konrad
Johns-Manville Corp.
Greenwood Plaza
Denver, Colorado 80217

Dear Howard:

During our recent Marinite Meeting in Pittsburgh, it was decided that a nondisclosure agreement should be drafted covering our joint research efforts to produce improved header materials for Alcoa's HDC casting process. Mr. Weber forwarded to my attention J-M's nondisclosure Letter Agreement which pertains to Marinite only. The attached version, preferred by Alcoa, covers both J-M's products and Alcoa's HDC process.

We would appreciate your review of this "wordy" document, and your comments on deletions or additions prior to acceptance will be welcomed.

Very truly yours,

M. J. Caprio
Senior Staff Buyer
Industrial Materials

MJC:gih

Attachment

Johns-Manville Corporation

Greenwood Plaza
Denver, Colorado 80217
(303) 770-1000

April 7, 1975

RECEIVED
APR 10 1975
PURCHASING

Mr. Mario J. Caprio
Aluminum Company of America
Alcoa Building
Pittsburgh, Pennsylvania 15219

Dear Mr. Caprio:

With regard to proposed meetings between representatives of Aluminum Company of America (hereafter "Alcoa") and Johns-Manville to discuss joint research efforts involving Marinite which efforts will be of mutual benefit to Alcoa and Johns-Manville, it is possible that during the course of these meetings, certain information may be disclosed by Johns-Manville to Alcoa relating to our Marinite operations which information is considered confidential and/or proprietary by Johns-Manville.

In consideration of such disclosure, you agree that all past and future information disclosed to you by Johns-Manville pertaining to our Marinite operations, whether such information was or is disclosed to you in writing or orally or obtained by you through your observation of our facilities or equipment, shall, except as specified below, be considered confidential and the property of Johns-Manville. It is agreed that you shall not use such confidential information except for the benefit of Johns-Manville and in accordance with the terms and conditions of this Letter Agreement, or disclose such confidential information to any third party. It is agreed that such information received by you shall not be considered confidential if and to the extent that:

(a) the information, as shown by competent evidence, was already known to you at the time of its receipt from us; or

(b) the information is or becomes, through no fault of yours, in the public domain.

It is agreed that the disclosure of certain information in a publication, such as a patent, will not free you with respect to disclosure to any third party of any information not specifically disclosed in or fairly ascertainable from the publication, such as, for example, the fact that such information or any portion of it is or is not used by Johns-Manville.

If this Agreement is acceptable to you, please indicate the same by signing and dating the accompanying copy of this Letter Agreement and returning it to me.

Very truly yours,

JOHNS-MANVILLE SALES CORPORATION

By: _____

Division General Mgr., IPD
TITLE

Agreed to and accepted this
_____day of _____, 1975.

ALUMINUM COMPANY OF AMERICA

By: _____

Title: _____

Cc: W9 Exmd
#26832

NONDISCLOSURE AGREEMENT

THIS AGREEMENT is made by Aluminum Company of America, a Pennsylvania Corporation (hereinafter called "Alcoa") and Johns-Manville Sales Corporation, a New York Corporation (hereinafter called "J-M").

WHEREAS:

A. Alcoa and J-M will be working together to enable J-M to improve Header Grade Materials and develop a product more suitable for Alcoa's use in the HDC Horizontal Continuous Casting process, and, toward that end, the parties anticipate that they will be providing Information to each other.

B. Alcoa possesses certain Information regarding the casting of aluminum ingots by a novel process developed by Alcoa and known as the HDC Horizontal Continuous Casting process. Alcoa is willing to disclose certain limited portions of such Information to J-M for the sole purpose set forth in Recital A above.

C. J-M possesses certain Information regarding the production of Header Grade Materials by processes developed by J-M. J-M is willing to disclose certain limited portions of such Information to Alcoa for the sole purpose set forth in Recital A above.

NOW, THEREFORE, in consideration of the undertakings of each to the other contained in this Agreement, and intending to be legally bound, the parties agree as follows:

ARTICLE I

DEFINITIONS

Section 1.1. As used in this Agreement, the terms and symbols defined in this Article I shall have the meanings respectively set forth for them below:

(a) The term HDC Horizontal Continuous Casting process shall mean a certain proprietary process hereinafter called "HDC" developed by Alcoa for the production of aluminum ingots on a continuous basis.

(b) The term Header Grade Materials shall mean certain proprietary refractory materials including those bearing the trademark, MARINITE, developed by J-M for use in HDC or other molten aluminum operations.

(c) The term "Information" shall, as applied to Alcoa, mean certain technical information relating to the HDC process belonging to Alcoa and existing during the term of this Agreement, and shall, as applied to J-M, mean certain technical information relating to the production of Header Grade Materials belonging to J-M and existing during the term of this agreement.

(d) The term "Disclosing Party" shall refer to Alcoa or J-M, whichever is disclosing Information, and the term "Recipient" shall refer to Alcoa or J-M, whichever is receiving Information.

ARTICLE II

INFORMATION DISCLOSED BY THE PARTIES

Section 2.1. The Information shall be disclosed at such places, in such manner, in such oral, written or pictorial form and by such of Disclosing Party's employees as Disclosing Party in its discretion shall determine.

Section 2.2. Disclosing Party does not hereby grant and nothing contained in this Agreement shall obligate Disclosing Party to grant to Recipient a license, an option to obtain a license, or any other rights under any patent or other industrial property rights now or hereafter owned or controlled by Disclosing Party. All written and pictorial embodiments of the Information received by Recipient from Disclosing Party, including copies thereof made by Recipient, are and shall remain the property of Disclosing Party.

ARTICLE III

OBLIGATIONS OF

CONFIDENTIALLY, USE AND NONDISCLOSURE

Section 3.1.

(a) All Information disclosed to Recipient by Disclosing Party shall be:

(1) received and maintained in confidence by Recipient and shall not be disclosed, directly or indirectly, by Recipient to any third party whatsoever;

(2) used by Recipient only for the purpose set forth in Recital A above; and

(3) disclosed by Recipient only to such directors and employees of Recipient who need to know such Information for the purpose set forth in Recital A above.

(b) The foregoing obligations of confidentiality, use and nondisclosure shall not apply:

(1) to any Information which was known to Recipient prior to the date of execution of this Agreement;

(2) to any Information which appears in issued patents, published patent applications, or printed publications other than by acts or ommissions of Recipient; or

(3) to any Information which the Recipient can show was received after the time of disclosure from a third party who did not acquire it directly or indirectly from the Disclosing Party under an obligation of confidence; provided, however, that Recipient shall be bound by all obligations of confidentiality imposed on Recipient by

such third party.

Section 3.2. As part of its compliance with obligations of confidentiality, use and nondisclosure set forth in this Article III:

(a) Recipient shall exercise all reasonable efforts to prevent third parties from gaining access to Information which is disclosed to Recipient and is subject to the obligations imposed by this Article III.

(b) As to all Recipient's directors and employees to whom Information is disclosed under Section 3.1 (a) (3) above, Recipient shall generally inform all such directors and employees of the proprietary interest of Disclosing Party in such Information.

(c) As to all writings, drawings, pictures or other documents, including copies thereof, made or received by Recipient and embodying the Information disclosed to Recipient by Disclosing Party, Recipient shall:

(1) mark each such document with the legend: "Confidential -- Property of Aluminum Company of America" or "Confidential -- Property of J-M Company, "as the case may be;

(2) not reproduce, copy or photograph, in any manner or form, any such document except as necessary to carry out the purpose set forth in Recital A above without the express written consent of Disclosing Party; and

(3) deliver to Disclosing Party all such documents, without retaining any such documents, on the notice of Disclosing Party requesting the delivery thereof.

Section 3.3. The Parties shall treat as confidential and not disclose the fact of this relationship between the parties.

ARTICLE IV

TERMINATION AND SURVIVAL OF OBLIGATION

Section 4.1. The term of this Agreement shall be for a period of five (5) years from the date hereof and shall continue indefinitely thereafter until either party, by giving at least sixty (60) days' written notice to the other party, terminates this Agreement.

ARTICLE V

GOVERNMENTAL APPROVALS

Section 5.1. Any Information received by Recipient from Disclosing Party under this Agreement shall not be exported by Recipient or disclosed by Recipient to any director or employee

who is not a United States citizen and resident when to do so would be contrary to the laws or regulations of the United States or any agency thereof. Recipient will not export any Information or disclose any Information to any such director or employee without the prior written consent of Disclosing Party and until Recipient has procured the licenses, assurances and approvals, if any, necessary under such laws or regulations.

ARTICLE VI

ASSIGNMENT

Section 6.1. This Agreement shall inure to the benefit of and be binding upon the parties hereto, their successors and assigns. This Agreement or any rights or obligations hereunder may not be assigned by either party without the prior written consent of the other party and then only in the manner and to the extent specified in such consent.

ARTICLE VII

INTEGRATION, MODIFICATION AND WAIVER

Section 7.1. This Agreement shall constitute the entire agreement between the parties hereto with respect to the subject matter hereof and shall supersede all previous negotiations, commitments and writings. This Agreement may not be released,

discharged, abandoned, changed or modified in any manner except by an instrument in writing signed by a duly authorized officer or respresentative of each of the parties hereto.

Section 7.2. The failure of either party hereto to enforce at any time any of the provisions of this Agreement or to exercise any right which is herein provided shall in no way be construed to be a waiver of such provisions nor in any way to affect the validity of this Agreement or any part thereof or the right of either party to enforce thereafter each and every such provision and to exercise any such right. No waiver of any breach of this Agreement shall be held to be a waiver of any other or subsequent breach. Nothing shall constitute, or have the effect of, a waiver except an instrument in writing signed by a duly authorized officer or representative of the party against whom such waiver is sought to be enforced which expressly, and not impliedly, waives a right or rights under this Agreement.

ARTICLE VIII

GOVERNING LAW

Section 8.1. This Agreement shall be construed and interpreted according to the laws of the Commonwealth of Pennsylvania, not including, however, rules relating to choice or conflict of laws.

Executed in duplicate this 23rd day of May, 1975.

ATTEST:

F. A. Thomas

ASST. SECRETARY

ALUMINUM COMPANY OF AMERICA

By _____

L. B. Neubert
Vice President, Purchasing

ATTEST:

Assistant Secretary

JOHNS-MANVILLE SALES CORPORATION

By _____

R. A. Stapleton
Vice President
Division General Manager