PLAINTIFF'S EXHIBIT

CT-488

TECHNICAL SPECIFICATIONS

CertainTeed

CertainTeed Corporation
Pipe and Plastics Group

SPECIFICATIONS CLASSIFICATION: A/C Standard Purchasing Specification		
T.C.O. REF. NO. 3	SPECIFICATION NO: 550	PAGE NO.: 1
SUPERSEDES: September 30, 1971	DATE OF ISSUE: MAR 14 1979	

DESCRIPTION:

Plastic Coupling Material for Storm Drain Pipe

1.0 General

1.1 Description

This specification describes the requirements for the storm drain plastic coupling material. The material shall be extruded polyethylene.

1.2 Use

The material is intended for use as a joining sleeve in the assembly of storm drain pipe.

1.3 Color

The material shall be black in color.

1.4 Conformance

The material as supplied under this specification shall conform to the requirements of ASTM Designation D1248, Type 1, Class C, Grade 5, except the material shall have a minimum tensile strength of 1500 psi and a minimum elongation of 400 percent.

1.5 Lot Size

For sampling and inspection purposes, a lot shall be defined as the quantity of material shipped on one order and received at one time at one location.

2.0 Requirements

CTD015157

2.1 Special

All polyethylene material shall be approved in writing by the Quality Control/Standards Manager of CertainTeed Pipe and Plastics Group (P&PG) and referenced by a compound number assigned by the vendor. After approval, no changes in materials may be made without authorization, in writing, from the Quality Control/Standards Manager. When such a change is authorized, it shall be referenced by a new compound number. The manufacturer shall inform the Purchasing Department and the Quality Control/Standards Manager of P&PG when such an authorized change is actually placed in effect.

PREPARED BY	APPROVED BY	R & D	MFG	SALES	I E	OTHERS

TECHNICAL SPECIFICATIONS

CertainTeed

CertainTeed Corporation
Pipe and Plastics Group

SPECIFICATIONS CLASSIFICATION: A/C Standard Purchasing Specification		
T.C.O. REF. NO.	SPECIFICATION NO:	PAGE NO.:
3	550	2
SUPERSEDES: September 30, 1971		DATE OF ISSUE: MAR 14 1979

DESCRIPTION:

Plastic Coupling Material for Storm Drain Pipe

2.2 Manufacturer's Inspection

The manufacturer shall perform such inspection and testing that all defective material is removed from each shipment before shipment is made to P&PG.

2.3 Manufacturer's Control Data

The manufacturer shall maintain records of the control data on all material manufactured for CertainTeed. The manufacturer shall be able to furnish a notarized statement that the requirements of this specification - paragraph 1.4 in toto - have been complied with for any given shipment.

2.4 Manufacturer's Affidavit

The manufacturer shall supply a certification of test results that each roll of finished material meets the minimum tensile strength of 1500 psi and minimum elongation of 400 percent.

2.5 Appearance

The material shall be free of cuts, tears, dents, or other defects that could detrimentally affect the material.

2.6 Dimensions

The dimensions shall be in accordance with the requirements of Figure 1 and Table A of this specification.

3.0 Test Methods

All test methods shall be as required by ASTM Designation D1248.

CTD015158

4.0 Packaging and Marking

The material shall be packaged in 100 foot rolls (except .21" x 10.25", which will be in 50 foot rolls) properly protected so as to be accepted by common carrier. The package shall also protect the material from Sunlight. Each roll shall be marked with a P&PG Purchase Order Number, vendor's compound name or trademark, and the width and thickness of the material.

PREPARED BY:	APPROVED BY:	R & D	MFG.	SALES	I.E.	OTHERS

TECHNICAL SPECIFICATIONS

CertainTeed CertainTeed Corporation Pipe and Plastics Group	SPECIFICATIONS CLASSIFICATION: A/C Standard Purchasing Specification		
	T.C.O. REF. NO.: 3	SPECIFICATION NO: 550	PAGE NO.: 3
	SUPERSEDES: February 4, 1972		DATE OF ISSUE: MAR 14 1979

DESCRIPTION:

Plastic Coupling Material for Storm Drain Pipe

5.0 Acceptance and Rejection

CertainTeed Corporation reserves the right to reject any lot or lots found not conforming to the requirements of this specification. Such rejection or acceptance of lot, lots, or portions thereof shall not be limited to the time of delivery but shall be accomplished within reasonable period following the date of delivery. In the event of rejection, the vendor shall be given the opportunity to inspect rejected material or representative samples of the rejected material. The vendor must express his desire to inspect rejected material within seven (7) days after notification of the rejection, and the physical inspection must be performed within 30 days.

Figure 1

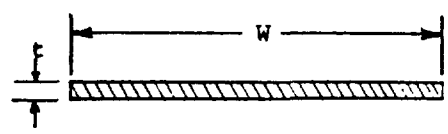

End View of Material

Table A

Thickness t" +.02" -.01"	Width W"	W Tolerance"	Number of Linear Feet Per Roll
.12	5.000	+.125" -.000"	100'
.12	6.000	+.125" -.000"	100'
.15	6.750	+.000" -.125"	100'
.18	8.500	+.000" -.125"	100'
.21	10.250	+.000" -.125"	50'

CTD015159

PREPARED BY:	APPROVED BY:	R & D	MFG.	SALES	I.E.	OTHERS
JBN	MRS		[illegible]	[illegible]		CHS

TECHNICAL SPECIFICATIONS

CertainTeed CertainTeed Corporation Pipe and Plastics Group	SPECIFICATIONS CLASSIFICATION: Preliminary Standard Product Specification		
	T.C.O. REF. NO.	SPECIFICATION NO: 550 Section B	PAGE NO.: 1 of 4
	SUPERSEDES:		DATE OF ISSUE: March 2, 1984

DESCRIPTION:

Plastic Couplings for Storm Drain Pipe

1. USE

The couplings herein described are designed for use in joining machined ends of A/C Pipe wherein the coupling acts as the only sealant.

2. MATERIAL COMPOSITION

Extruded polyethylene conforming to ASTM D 1248, Type II, Class C, Grade W5. Color is black.

3. FABRICATED COUPLINGS

Couplings are formed from sheets of the above material in the form of sleeves by Butt Welding via heat fusion. The resulting splice shall be completed across the coupling width without voids. The splice shall be capable of meeting the tensile requirement of ASTM D 1248. Splices shall be square with no overlap in the vertical or horizontal directions. Excess flash shall be removed to provide square ends, smooth inside diameter and a 1/16" maximum height on the outside diameter.

The coupling surfaces shall be free from cuts, tears, dents, crazing, lumps or voids that would adversely affect performance.

4. DIMENSIONS

Coupling dimensions shall be in accordance with the following.

CTD015160

PREPARED BY	APPROVED BY	R & D	MFG	SALES	I.E.	Q.C.	OTHER
M. R. Strickey			AB				CJS

ESCRIPTION:

Plastic Couplings for Storm Drain Pipe

Sketch and Table

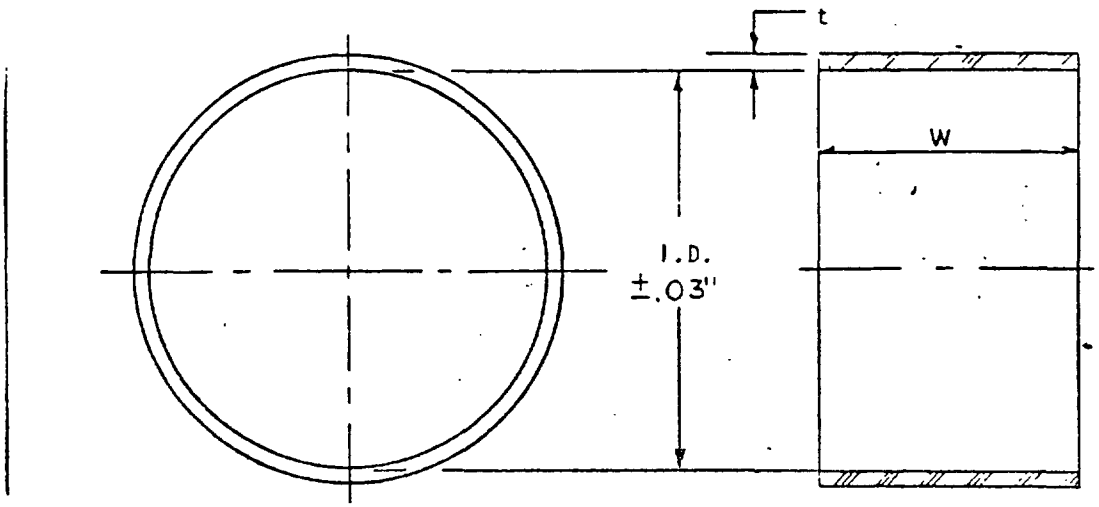

CPLG. SIZE, IN.	T"	W"	CLASS II	CLASS III	CLASS 2500D	CLASS IV	CLASS V
6"	0.12	5.00	6.74	6.74	6.74	6.74	6.74
8"	0.12	5.00	8.79	8.79	8.79	8.79	8.79
10"	0.12	6.00	10.89	10.89	10.89	10.89	11.09
12"	0.15	6.75	12.86	12.86	12.86	13.14	13.28
14"	0.15	6.75	14.93	14.93	14.93	15.23	15.60
15"	0.15	6.75	16.02	16.02	16.02	16.43	16.65
16"	0.15	6.75	17.04	17.04	17.04	17.47	17.71
18"	0.18	8.50	19.05	19.33	19.33	19.76	19.76
20"	0.18	8.50	21.10	21.39	21.39	21.85	21.85
21"	0.18	8.50	22.12	22.42	22.42	22.87	22.87
24"	0.21	10.25	25.49	25.71	25.93	25.93	26.66

Tolerances: t 6"-10" = +.02",-.00" W 6"-10" = +.125",-.00"
(all classes) 12"-24" = +.02",-.01" 12"-24" = +.00", -.125"

Note: Coupling I.D.'s are meant to be essentially uniform across W. I.D. tolerances apply along entire width.

CTD015161

TECHNICAL SPECIFICATIONS

CertainTeed CertainTeed Corporation Pipe and Plastics Group	SPECIFICATIONS CLASSIFICATION: Preliminary Standard ~~Product~~ Specification		
	T.C.O. REF. NO.	SPECIFICATION NO: 550 Section B	PAGE NO.: 3 of 4
	SUPERSEDES:		DATE OF ISSUE: March 2, 1984

DESCRIPTION:

Plastic Couplings for Storm Drain Pipe

5. MARKING

Each coupling shall be legibly marked with the coupling size and class. The marking shall be on the outer surface opposite the splice. Letter size shall be about 1/2 inches not to exceed 3 1/2 inches in length. Example 15"-2500D.

6. PACKAGING

To reduce volume, couplings shall be nested as follows:

6" -- 5
8" -- 7
10" -- 8
12" -- 8
14" -- 8
15" -- 9
16" -- 10
18" -- 9
20" -- 10
21" -- 11
24" -- 10

Couplings shall be nested separately by size and class.

Nested couplings are to be shipped palletized in plain, strong, gaylord style boxes approximating 41"x34"x28".

The cartons may be marked with the vendor's label or the information may be stencilled.

As a minimum, markings shall include the vendor's identification, the coupling size, class and number of couplings in the carton. Also, the CertainTeed purchase order number shall be shown.

CTD015162

PREPARED BY:	APPROVED BY:	R & D	MFG	SALES	I.E.	Q.C.	OTHERS
M. F. Shirley			RSH				[illegible]

DESCRIPTION:

Plastic Couplings for Storm Drain Pipe

THIS PAGE INTENTIONALLY LEFT BLANK

TECHNICAL SPECIFICATIONS

CertainTeed

CertainTeed Corporation
Pipe and Plastics Group

SPECIFICATIONS CLASSIFICATION: A/C Standard Purchasing Specification		
T.C.O. REF. NO.: 3	SPECIFICATION NO: 550 Addendum	PAGE NO.: 1
SUPERSEDES: September 30, 1971	DATE OF ISSUE: MAR 14 1979	

DESCRIPTION:

Plastic Coupling Material for Storm Drain Pipe

NOT TO BE DISTRIBUTED TO VENDORS

1.0 General

This addendum is designed to show the special sampling plan employed as a means for conducting surveillance over the storm drain plastic coupling material.

2.0 Normal Inspection

2.1 Sampling

Sampling for normal inspection procedures shall be carried out on the sampling plan as shown in Table 1 for each width and thickness.

Table 1

No. of Rolls in Each Width and Thickness in Shipment	Number of Rolls In Sample	Acceptable Defectives	Defectives Constituting Rejects
2 - 15	2	0	1
16 - 50	3	0	1
51 - 150	5	0	1

Each sample shall be a strip of material 6" long and the width of the roll.

CTD015164

2.2 Testing

All testing shall be done on samples that have been conditioned for a minimum of four (4) hours at a temperature of $70^{o} \pm 5^{o}F$.

2.2.1 Appearance

Visual examination. A 100% check of sample shall be taken.

PREPARED BY:	APPROVED BY:	R & D	MFG.	SALES	I.E.	OTHERS

TECHNICAL SPECIFICATIONS

CertainTeed

CertainTeed Corporation
Pipe and Plastics Group

SPECIFICATIONS CLASSIFICATION: A/C Standard Purchasing Specification		
T.C.O. REF. NO.	SPECIFICATION NO:	PAGE NO.:
3	550 Addendum	2
SUPERSEDES: September 30, 1971		DATE OF ISSUE: MAR 14 1979

DESCRIPTION:

Plastic Coupling Material for Storm Drain Pipe

NOT TO BE DISTRIBUTED TO VENDORS

2.2.2 Dimensional

Thickness examination - Four (4) thickness micrometer measurements shall be taken with one measurement per edge one inch in. The average of the readings must meet the minimum specification.

2.2.3 Tensile Strength

If the samples pass paragraph 2.2.1 and 2.2.2, the samples shall be tested in accordance with A/C Test Method TM-39.

3.0 Rejection

The following procedure shall be followed on all rejected shipments:

3.1 The Headquarters Purchasing Department shall be notified. They will issue instructions on when and how the shipment is to be returned.

3.2 Quality Control Headquarters (A/C) shall be notified. If requested, defective samples shall be forwarded to the Quality Control Manager.

4.0 Note: (1) Polyethylene should have an indefinite shelf life as long as it is not exposed to ultra-violet or sunlight for lengthy periods. Since the material is thermoplastic, excessive heat in the storage area could distort the shape of the sleeve.

(2) Ozone will not affect the material.

(3) The splices you make will not be injured by aging unless you use excessive heat in the splicing operation, in which case the splice area will become brittle as the aging process increases.

CTD015165

PREPARED BY:	APPROVED BY:	R & D	MFG.	SALES	I.E.	OTHERS
LBD						CKS

TECHNICAL SPECIFICATIONS

CertainTeed CertainTeed Corporation Pipe and Plastics Group	SPECIFICATIONS CLASSIFICATION: A/C Standard Purchasing Specification		
	T.C.O. REF. NO.: 4	SPECIFICATION NO: 550 Addendum	PAGE NO.: 3
	SUPERSEDES: March 14, 1979		DATE OF ISSUE: JAN 23 1980

DESCRIPTION:

Plastic Coupling Material for Storm Drain Pipe

NOT TO BE DISTRIBUTED TO VENDORS

5.0 Approved Vendors

Kirkhill Rubber Company
Brea, California

Note: Kirkhill supplies Union Carbide Compound NO. DFDA 6423. This compound also meets ASTM D2952 for a code designation of 337000.

CTD015166

PREPARED BY:	APPROVED BY:	R & D	MFG.	SALES	I.E.	OTHERS
FIS	MKB		AD/H	J.R.A.		CHS