An automatic tension control device will help to prevent breakage of blades One device also prevents the motor from starting if the tension on the blades is too much or too little

Inasmuch as a modern band saw, especially a large one, will run for a long time after the power is shut off, it should have a brake operating on one or both wheels to bring it to a quick stop Men have been seriously injured by taking hold of a running blade, not realizing it was in motion

On a band resaw, a heavy sheet metal guard formed to the curvature of the feed rolls should cover the nip point It should be installed so that the edge is 3/8 in from the plane formed by the inside face of the feed roll in contact with the stock being cut

When small pieces of stock are to be cut, a special jig or fixture should be used

The floor around the band saw should be kept clean and not allowed to get slippery Nonslip treads can be applied to reduce slipping

There should be ample clear space around the saw, free of traffic, so that the worker and the stock will not be bumped

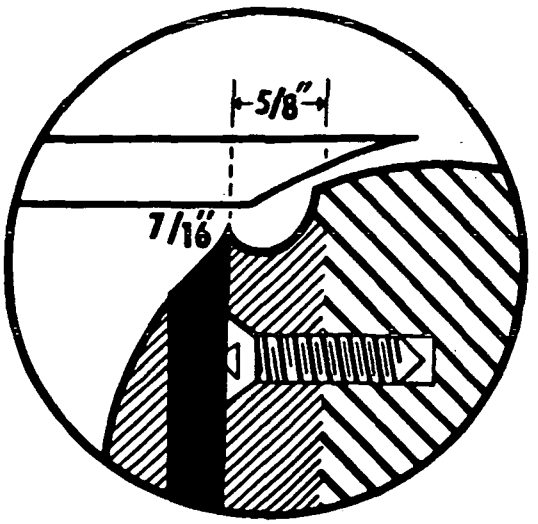

FIG 27-11 —Detail of jointer head and knife (circular) throat not deeper than 7/16 in , not wider than 5/8 in

Courtesy U S Dept of Labor, Bureau of Labor Standards

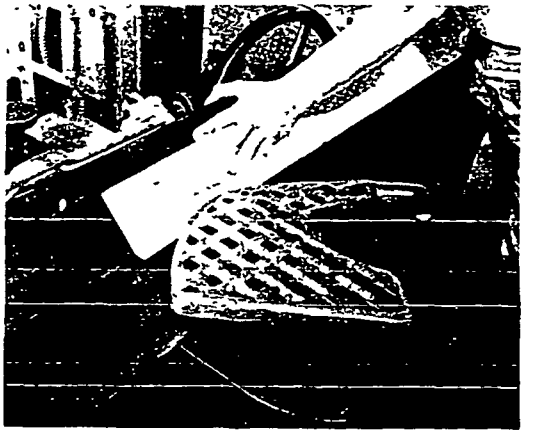

FIG 27-12 —"Leg of mutton" guard provides good protection during edging, but does not give full protection for surfacing—much of the cutting head is exposed as the read end of the stock passes over it Note how operator holds thumb over fence to prevent his hand from slipping when fence is not perpendicular to the jointer table A push block should be used

Jig saws

Jig saws are not normally considered hazardous but they occasionally cause disabling injuries

Safe operating procedure requires that the blade be properly attached and secure, that the threshold rest on the stock, that the guard be in effective position, and that the operator keep his hands a safe distance from the blade

In addition, turn cuts should be made slowly, no sharp or small radii turns should be made with a large blade, and cuts should be planned to eliminate the need to back out of curves The table should be cleaned with a long-handled brush, preferably after the blade has stopped

Other Woodworking Equipment

Jointers

Hand-feed jointers or surface planers are, second to circular saws, the most dangerous woodworking machines Injuries come almost entirely from getting the hands and fingers against the knives, and many acci-