PLAINTIFF'S EXHIBIT

ASI-421

AMERICAN STANDARD

GW GAS BOILER

INSTRUCTION MANUAL

NON PACKAGED BOILERS

CERTIFIED BY AMERICAN GAS ASSOCIATION

NOTICE TO INSTALLER AND OPERATOR

THIS BOOKLET MUST BE AFFIXED ON OR ADJACENT TO THE HEATING EQUIPMENT.

FORM NO BP-31408

SERIES NO. 18-J

06493

TO THE OWNER:

The American-Standard Boiler which has been installed for you is the heart of your hydronic heating system. Its design represents advanced engineering and manufacturing techniques to produce a product which will provide you with heating comfort at the lowest operating and maintenance cost. The sections are made of cast iron which is well known for its long life and corrosion resistant properties. When hot water is used as a heating medium, the entire system is filled with water and an expansion tank provides space for the increased volume as the water in the system expands when it is heated. Under no conditions should any boiler be fired unless it is properly filled with water. If a boiler is not in use during the winter season it must be drained or otherwise protected against freezing temperatures.

A gas fired boiler uses gas as a fuel. The chemical composition of natural gas is similar to gasoline which is used as the fuel in an automobile engine. The toxic nature of automobile exhaust fumes is well known. These fumes are toxic because the hydrocarbon fuel is not completely burned. In a properly adjusted and normally operating gas fired appliance such as a kitchen range, boiler, water heater, etc., the hydrocarbon fuel is burned completely, producing harmless combustion by-products, and these products are normally vented to the outside atmosphere. Normal prudence will dictate that the venting system and combustion process of any gas fired appliance be checked periodically to assure that normal operation is taking place. Any abnormalities in combustion or venting of flue products to the outside atmosphere should be promptly corrected.

By following the suggestions contained in this manual, you can assume your boiler will function properly for many years. Should any problem arise, contact your nearest American-Standard contractor, whose name can be found in the "yellow pages" of your telephone directory.

AMERICAN STANDARD, INC.

Information relative to the rating and fuel requirements is located on the rating plate mounted on the front of the boiler. Please refer to this information and include model number and series number when ordering replacement parts.

NOTE: All parts of this boiler have been carefully inspected and packed. See packing and parts list sheet for details.

In case of shortage, make sure that all parts have been removed from shipping container and examine packing material thoroughly. If parts cannot be found, report shortage to your dealer, giving boiler size, series number, date, inspector's number and packer's number (See PARTS LIST and packer's check ticket).

TABLE OF CONTENTS

ITEM	PAGE NO.
GENERAL INFORMATION	1
SETTING THE UNIT	1
CHIMNEY	2
AIR SUPPLY	2
GAS PIPE SIZE AND DELIVERY SCHEDULE	3
RATINGS - DATA	3
CONTROL TAPPINGS	4
PIPING RECOMMENDATIONS	4
DIMENSIONS FOR INLETS AND OUTLETS	5
BOILER INSTALLATION	10
WIRING DIAGRAMS	14-15
FILLING SYSTEM	16-17
LIGHTING INSTRUCTIONS -- 24 VOLT SYSTEM	18
LIGHTING INSTRUCTIONS -- S.E. SYSTEM	19
LIGHTING INSTRUCTIONS -- 24 VOLT & S.E. COMBINATION CONTROL	20
MANIFOLD PRESSURE ADJUSTMENT	22
MAIN BURNER AIR ADJUSTMENT	22
PILOT ADJUSTMENT	22
GENERAL MAINTENANCE	24
INSPECTION AND CLEANING OF BOILER	25

GENERAL INFORMATION

The GW boiler, designed for maximum comfort and efficiency, is the latest development in cast iron boiler technology. Developed specifically for forced water circulation, the boiler is available for use with natural and propane gases.

The boiler design is A.G.A. certified, and is constructed and tested in accordance with A.S.M.E. regulations for up to 50 psig working pressure (100 psig working pressure available on order).

The cast iron surfaces will afford long trouble-free service while providing optimum compactness for an atmospheric gas-fired Hydronic system.

Relatively small water content, and specially designed burners and controls permit close temperature control of the boiler water. Consequently, this boiler is not equipped with a domestic hot water supply.

The GW features: compact, light weight design; no separate base or combustion chamber; 8 thru 10 sections ranging from 462 Mbh to 594 Mbh input.

This manual gives the necessary information for the proper assembly, installation, operation, maintenance, and service of the units. For special installation problems contact American-Standard, Hydronics Department, 25 Rano Street, Buffalo, New York.

INSTALLATION REQUIREMENTS

This boiler should be installed in accordance with the latest American National Standards "Installation of Gas Appliances and Gas Piping" obtainable from the American Gas Association, 1515 Wilson Blvd., Arlington, Virginia 22209. Installation should also conform with requirements of local gas company and all state and city building codes.

This boiler is approved for installation on non-combustible flooring only. On hot water systems, the expansion tank should not be installed in cold or exposed place. If pipe leading to or from the tank freezes, serious damage may result. If valve of any description is installed in the piping leading to or from the expansion tank BE SURE THAT IT IS OPEN WHILE THE BOILER IS IN OPERATION.

LOCATION

Locate the boiler near the chimney or flue and as centralized with respect to the heat distribution system as practicable. Provide the necessary service accessibility clearance.

For locations where the floor is not level or if water conditions exist, the boiler should be mounted on a concrete base, preferably to a height of 3".

SERVICE ACCESSIBILITY CLEARANCES

Between boiler, vent collector and any combustible material - 6 inches. Front or sides for servicing, cleaning or removal of controls, burners and circulator - 24 inches.

In utility room installations, the door shall be wide enough to allow the largest part to enter or to permit the replacement of another appliance such as a water heater.

COMBUSTION AIR AND VENTILATION

Adequate facilities must be available for providing air for combustion and ventilation. Except for installations in large spaces (such as full basements) where infiltration can normally be assumed to provide sufficient air, this will usually necessitate:

(a) Two openings to interior space having adequate infiltration from the outside, one near the floor, the other near the ceiling, installed in the door or a single wall of the boiler room. Each opening must have a minimum free area of one (1) square inch per 1000 Btu per hour of input rating of all appliances in the room.

(b) Additional opening to exterior space when combustion air must be obtained from outside, minimum free area of 1 square inch per 5000 Btu per hour of input rating, or in accordance with the methods outlined in the latest issue of A.N.S. Z21.30 entitled "Installation of Gas Appliances and Gas Piping".

CHIMNEY

1. Flue or vent connection to chimney or breeching shall not be smaller than the outlet on the drafthood.

2. Where two or more appliances vent into a common flue, the area of the common flue should at least equal the area of the largest flue or vent connector plus 50% of the areas of the additional flue or vent connectors.

3. Flue or vent connector must be inserted into, but not beyond, the inside of the chimney flue.

4. Horizontal runs of flue pipe should be kept at a minimum and should pitch upward from the boiler at least 1/4" per foot.

TESTING

Before connecting boiler, plug openings, fill boiler with water and subject to not less than 10 lbs. nor more than 50 lbs. pressure. Inspect boiler inside and outside for leakage as a result of breakage from handling and shipping. To safeguard accuracy of gauge and controls supplied with boiler, do not install until after test of boiler. This precaution of testing the boiler will simplify handling of any necessary replacements or adjustments and assist in treating claims against transportation companies. After test, drain and remove plugs where required.

PIPE DELIVERY SCHEDULE

Capacity of Pipes in Cubic Feet of Gas Per Hour.
Based on a pressure drop of 0.3 in. W.C. and 0.6 specific gravity gas.

Length of Pipe In Feet	Pipe Size		
	1"	1-1/4"	1-1/2"
10	520	1050	1600
20	350	730	1100
30	285	590	890
40	245	500	760
50	215	440	670
70	180	370	560
100	150	305	460

Boiler Number	SIZE OF GAS CONNECTION	
	Natural Gas	Propane
GW-8	1	3/4
GW-9	1	3/4
GW-10	1	3/4

Table 1 - GAS PIPE DELIVERY SCHEDULE AND CONNECTIONS

Table 2 - RATINGS FOR NATURAL AND PROPANE GASES

Boiler Number	A.G.A. Input Btu/Hr.	A. G. A. Output Btu/Hr.	Net Installed Radiation Mbh Water
GW-8	462,000	369,600	321.7
GW-9	528,000	422,400	367.0
GW-10	594,000	475,200	413.9

I=B=R Approved

A.G.A. DESIGN CERTIFIED

06498

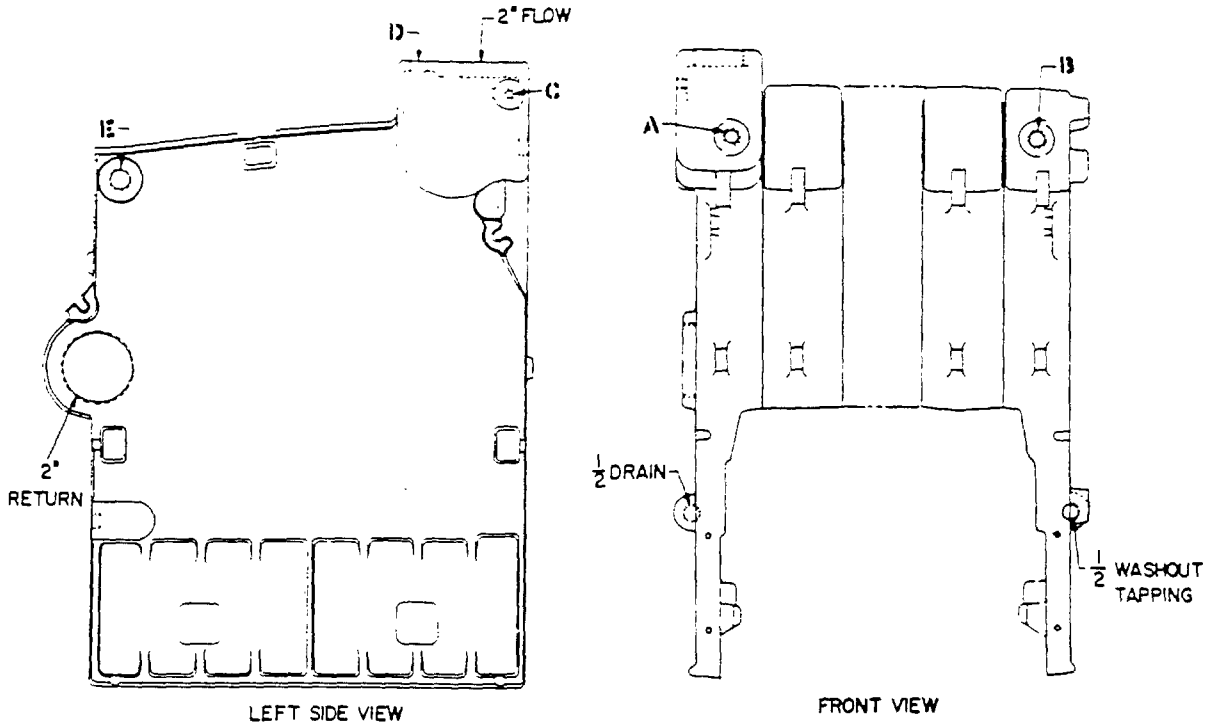

SECTION ASSEMBLY SHOWING TAPPINGS

FIG. 1

CONTROL APPLICATION		
LOCATION ON BOILER	SIZE OF TAPPING	CONTROLS
A	½	LIMIT CONTROL
B	½	AUXILIARY LIMIT CONTROL OR OPERATING CONTROL
C	¼	TEMPERATURE AND PRESSURE GAGE
D	¾	EXPANSION TANK
E	¾	PRESSURE RELIEF VALVE

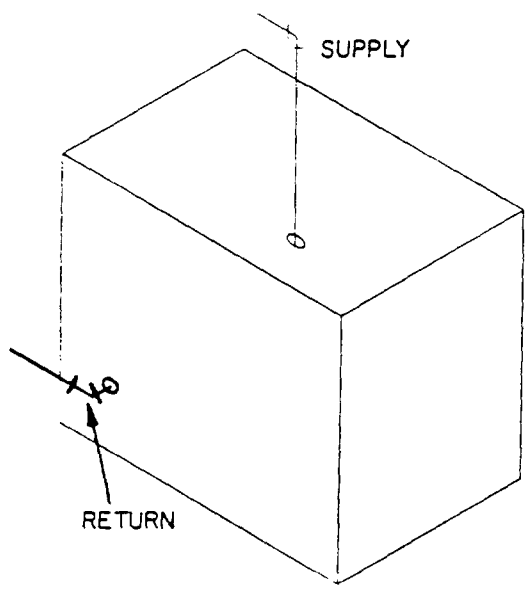

BOILER NUMBER	SUPPLY (IN)	RETURN (IN)
GW-8	2	2
GW-9	2	2
GW-10	2	2

MINIMUM PIPING RECOMMENDATIONS FORCED HOT WATER

FIG. 2

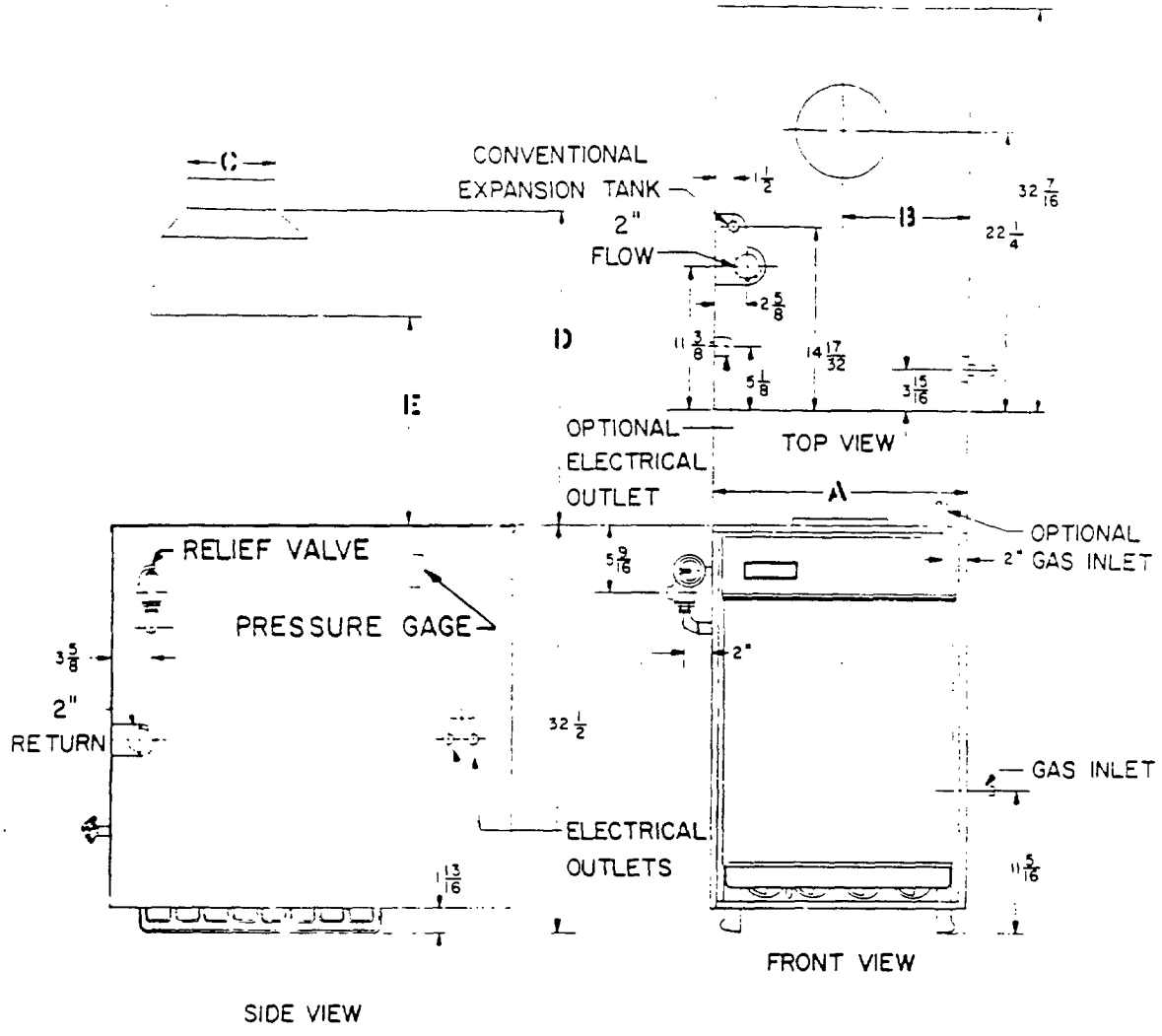

BOILER NO	NO. OF SECTIONS	NO. OF BURNERS	DIMENSIONS A	B	C	D	E	WATER CONTENT (GALLONS)	FLUE DIAMETER (INCHES)	FLUE HEIGHT ABOVE DRAFTHOOD (FT)	GAS CONNECTIONS NAT	LP
SW-8	8	7	31 1/4	18 3/8	9"	30 11/16	20	17.9	9"	15	1"	3/4
SW-9	9	8	35	17 1/2	10"	33 7/16	22	19.9	10"	15	1"	3/4
SW-10	10	9	38 3/4	19 3/8	10"	33 7/16	22	21.9	10"	15	1"	3/4

DIMENSIONS FOR INLETS AND OUTLETS

FIG. 3

RECOMMENDED PIPING WHEN AUX. MANUAL SHUTOFF VALVE OR SEPARATE MANUAL SHUTOFF VALVE AND AUTOMATIC GAS VALVE ARE SUPPLIED.

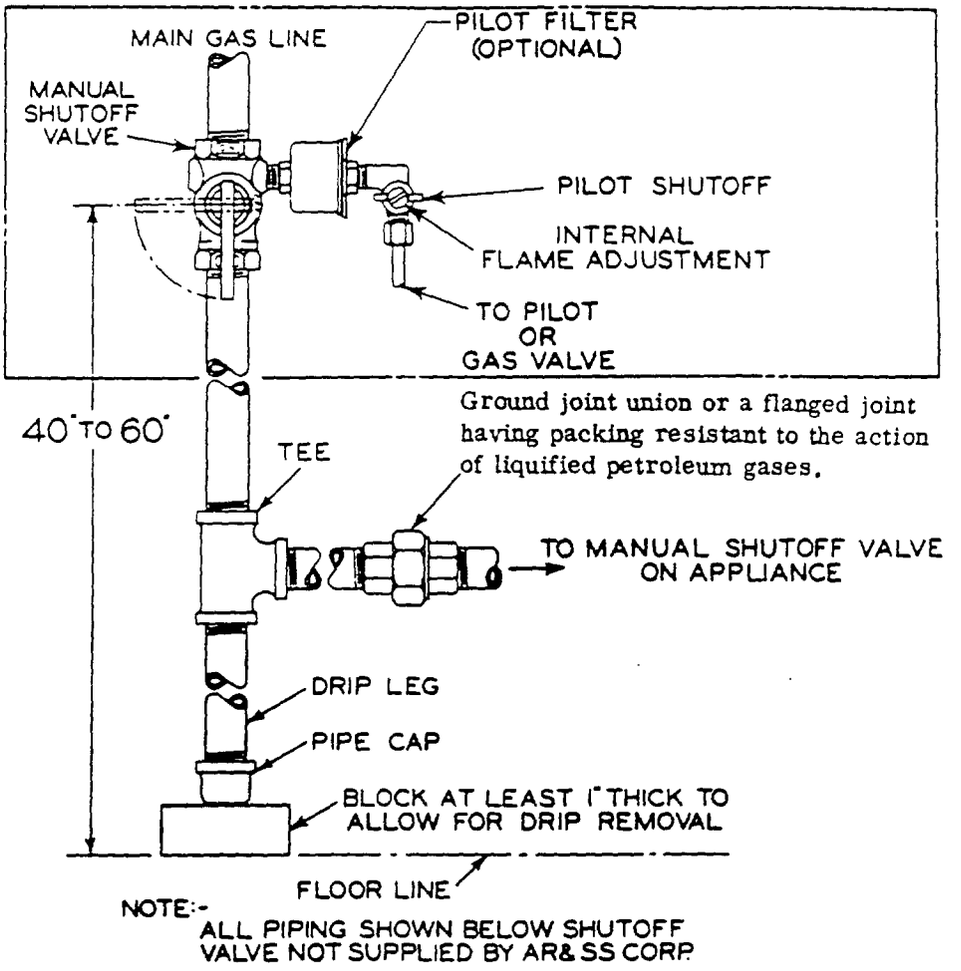

FIG. 4·

RECOMMENDED PIPING FOR DRIP LEG CONNECTION TO BOILER

GW BOILER WITH ELIMINAIRE

The ELIMINAIRE is a unique built-in air separator which prevents air from being transmitted to the system and directs the air to the compression tank. External air separators such as dip tube or inlined accessories are not required. This important feature on the L. H. END SECTION also allows for considerable simplification of the near boiler piping (See Figure Below) and assures positive air separation essential to proper system performance. The ELEMINAIRE plus the recommended piping provides for a substantial saving in material and installation cost.

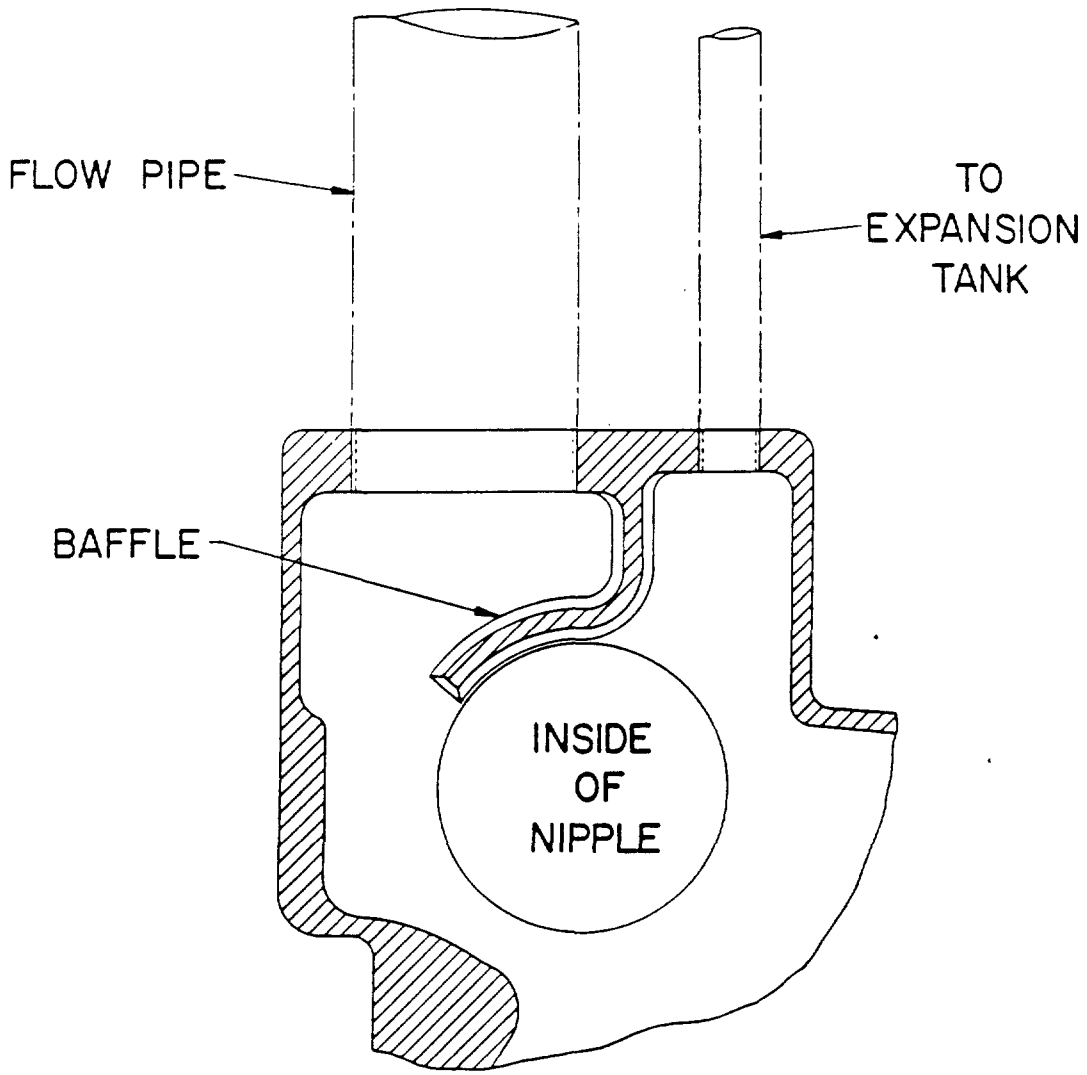

PIPING FOR FLOW PIPE & EXPANSION TANK

FIG. 5

CAUTION

If and when this boiler is used in connection with refrigeration systems, boiler should be so installed that chilled medium is piped parallel with the heating boiler using appropriate valves to prevent the chilled medium from entering the heating boiler.

When hot water heating boilers are connected to heating coils located in air handling units, where they may be exposed to refrigerated air circulation, such boiler piping system shall be equipped with flow control valves or other automatic means to prevent gravity circulation of the boiler water during the cooling cycle.

The expansion tank should not be set in a cold or an exposed place. If the pipe leading to or from the tank freezes, serious damage may result. If valve of any description is installed in the piping leading to or from the expansion tank BE SURE THAT IT IS OPEN WHILE THE BOILER IS IN OPERATION.

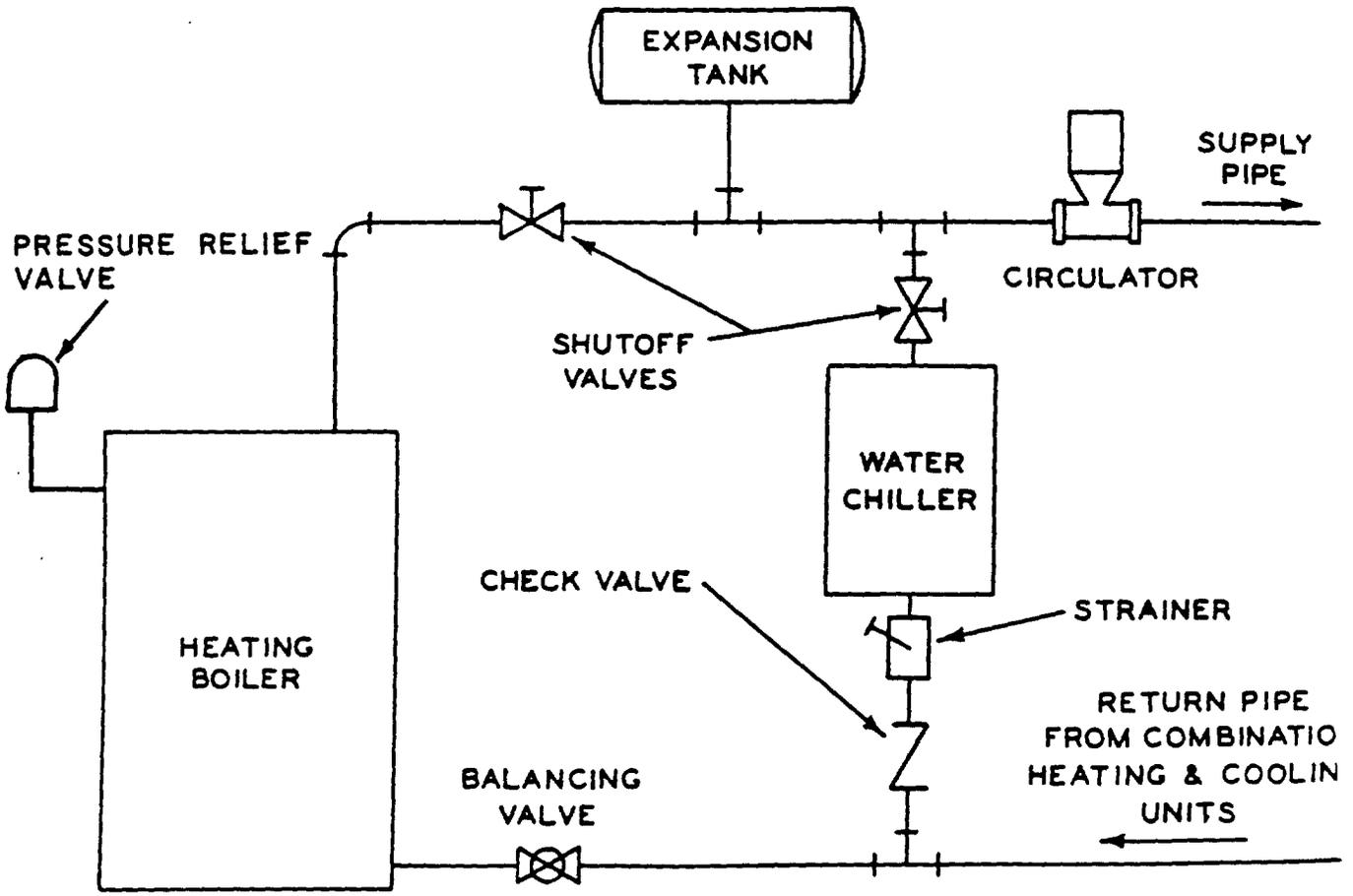

RECOMMENDED BOILER PIPING FOR COMBINATION HEATING & COOLING UNITS

FIG. 6

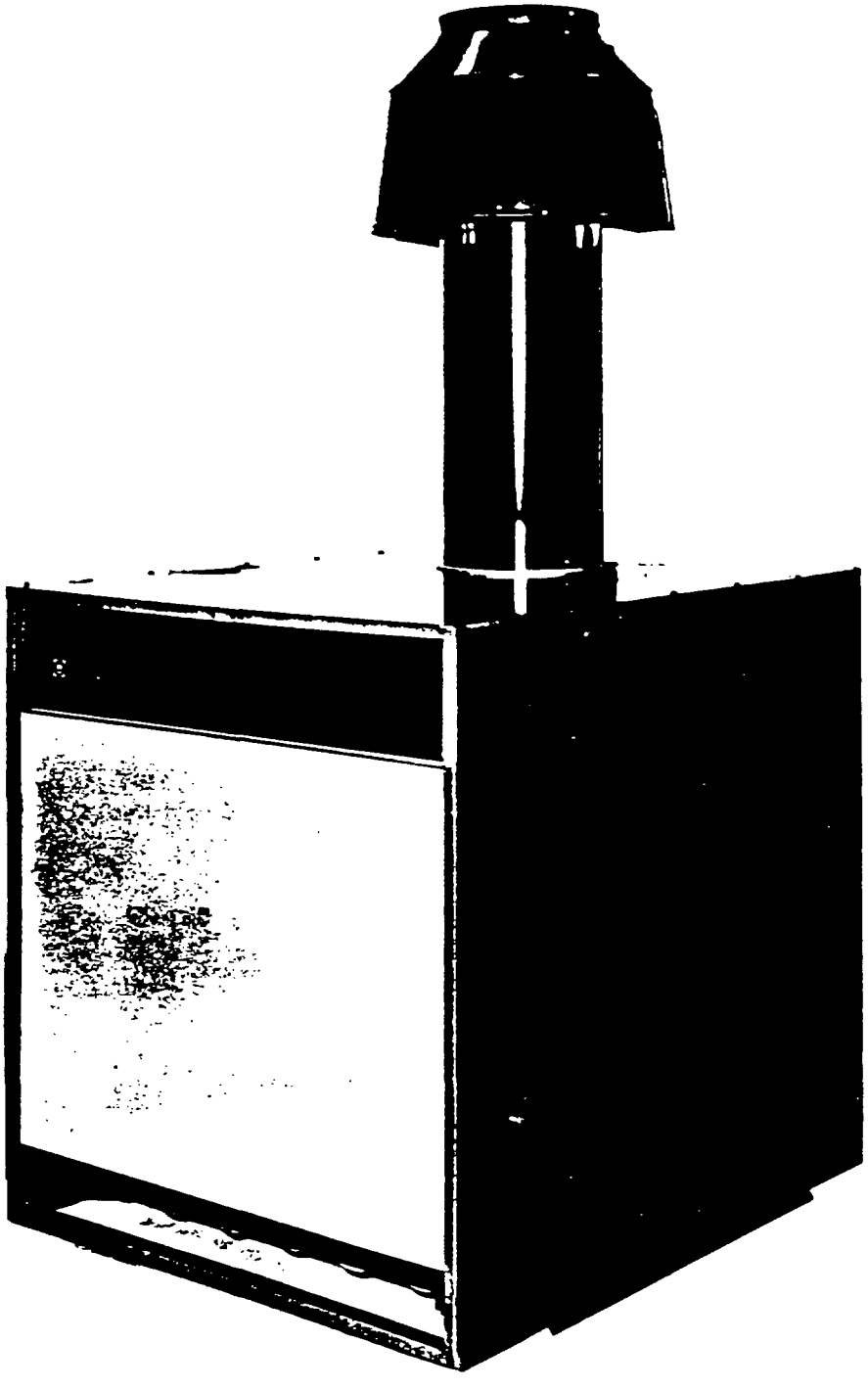

FIG. 7
GW BOILER ASSEMBLY

BOILER INSTALLATION

Non-packaged boilers are shipped with the boiler sections and canopy factory assembled. The remaining boiler parts are to be assembled on the job-site. Installation should be accomplished as follows:

BOILER ASSEMBLY

1. Remove section assembly from shipping skid and place boiler in approximate final location (refer to Page 1, Location).

2. Inspect and test boiler (refer to Page 2, Testing).

3. Place insulation in front and rear cover plates. Install two (2) #10 x 3/4" sheet metal screws in rear plate to retain insulation (see Figure 8).

4. Assemble front and rear plates using four (4) 5/16" x 1-1/4" hex. machine screws and 5/16" star washers provided. Putty between top of front plate and sections to form gas seal. (See Figure 9).

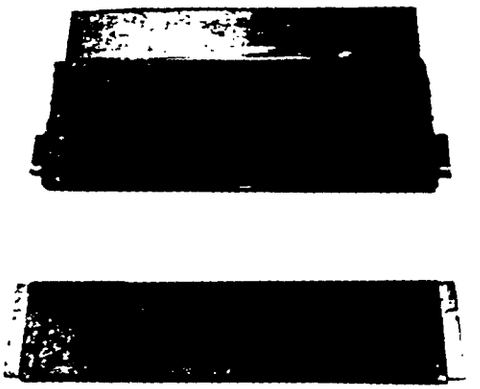

FIG. 8

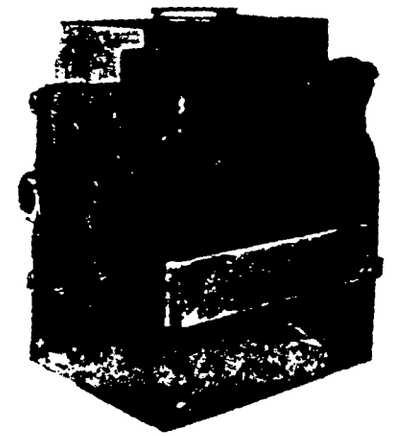

FIG. 9

5. Place the steel "T" bar burner support in position so that it engages the lugs on the end sections. NOTCHED SIDE MUST FACE TO FRONT OF BOILER.

6. Attach manifold piping and control assembly to front of boiler with four (4) 5/16" x 1/2" hex. head screws and 5/16" flat washers provided.

7. Attach pilot burner bracket and tubing assembly to the main burner with #10-24 x 5/16" truss head machine screws.

8. See that air shutters are attached to tube ends of burners, then assemble the burners to the boiler. Start at either end and insert the burners over the manifold and into position with tube end of each burner mounted onto its respective spud on the manifold and with each burner resting on the burner support. Lug on the bottom of each burner must enter its respective notch in the burner support to insure that the burners are properly located. Refer to Fig. 23 for the location of the main burner to which the pilot burner assembly is to be attached.

9. Vent tube which is attached to pilot burner (when required) is to be connected to the tapping on the automatic gas valve. The end with the tip should be 3/8" below top of the main burner.

INSTALLATION OF JACKET

1. Install the burner access doors with the holes in the doors engaging the projections on the front plate.

2. Install the four jacket angle clips to the front and rear plates with #8 x 3/8" sheet metal screws (see Fig. 10)

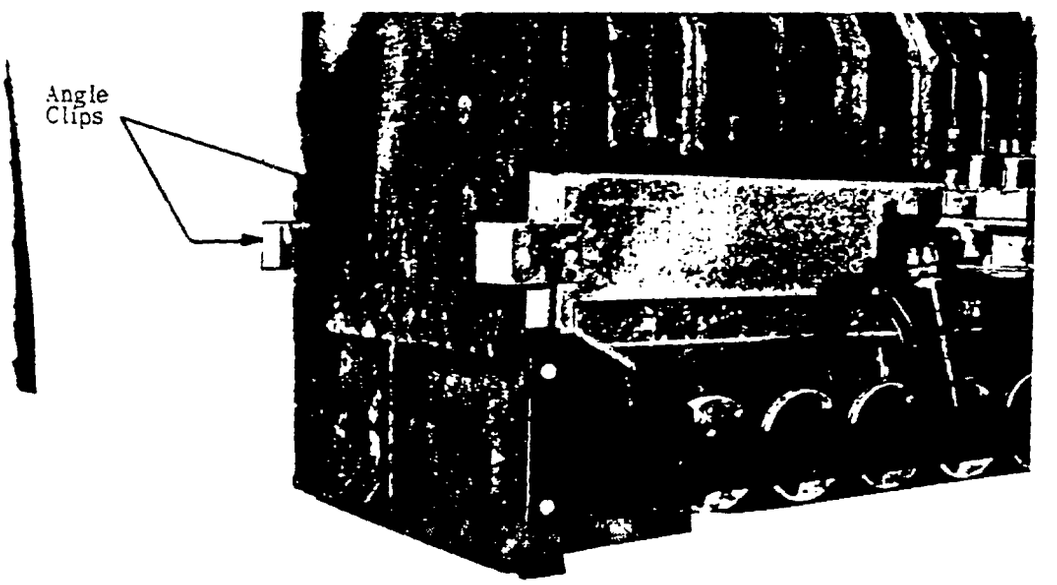

FIG. 10

3. Hang the L. H. side panel and the R. H. side panel onto the jacket angle clips.

4. Attach the jacket liner to the side panels with #8 x 3/8" sheet metal screws. LEAVE ALL JACKET SCREWS SLIGHTLY LOOSE UNTIL ENTIRE JACKET IS ASSEMBLED. Drape the loose end of the jacket liner insulation over the canopy (see Figure 11).

5. Attach the back panel to the side panels with #8 x 3/8" sheet metal screws.

6. Attach the tie bar to the side panels at the lower front portion of the boiler with #8 x 3/8" sheet metal screws (see Figure 12).

7. Place the black upper front panel so that it engages the slots in the side panels and attach the top panel with #8 x 3/8" sheet metal screws.

8. Attach the number and series plate and the lighting instructions plate to the jacket liner with #6 x 1/4" sheet metal screws.

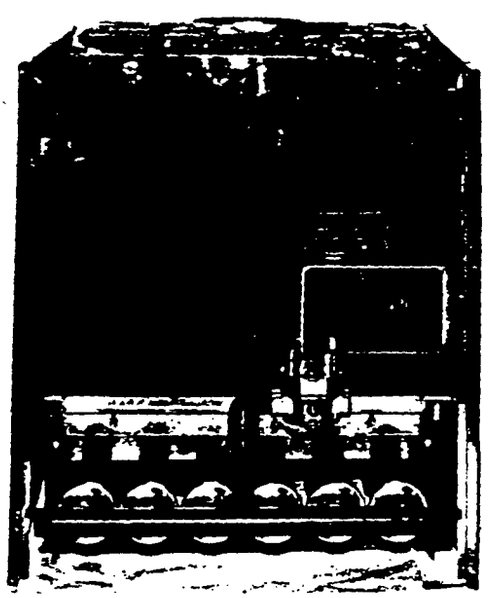

FIG. 11

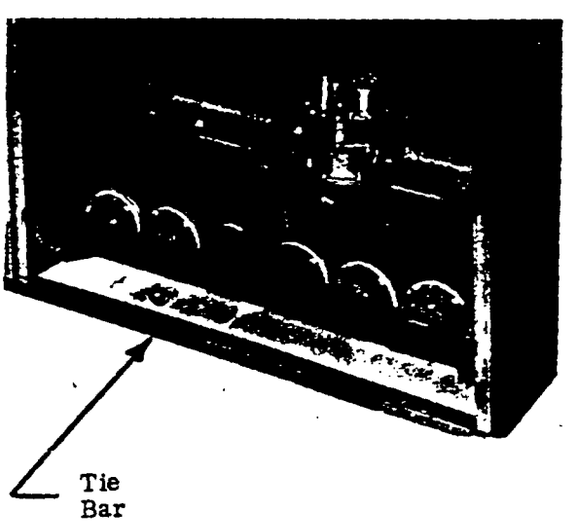

FIG. 12

INSTALLATION OF CONTROLS AND PIPING

1. Install the temperature-pressure gauge and the relief valve (with 3/4" nipple and elbow) in the L. H. side of the boiler (See Figure 3).

2. Install the gas piping including drip leg connection to boiler (refer to Page 3). All pipe joints must be made using compound resistant to propane gas.

3. Attach the safety pilot switch (when used) to jacket liner with #8 x 1/2" sheet metal screws.

4. Connect the pilot gas line from the combination control or safety pilot switch to the pilot burner. When safety pilot switch is supplied, install pilot gas supply line from switch to pilot shutoff valve on manual shutoff valve.

5. Electrical service should be brought to the boiler and connections made to accord with the wiring diagram furnished on the inside of the jacket liner. Install and connect transformer and operating control according to applicable wiring diagram.

6. Install drain cock in 1/2" tapping at rear of boiler using 1/2" nipple and coupling provided therefore.

7. Place drafthood firmly on the flue outlet collar of the canopy which projects above the jacket and connect to chimney.

8. Install water supply and return lines (refer to Pages 4, 5, 7, and 8).
A full sized discharge pipe from the relief valve to drain is recommended.

9. Fill System (refer to Pages 16 and 17).

10. Test water system for tightness. Check all gas piping joints for leakage by using a soapsuds solution before operating unit.

11. Light boiler (refer to Pages 18, 19, and 20).

12. Make final burner adjustment and check out controls (refer to Pages 22 and 23).

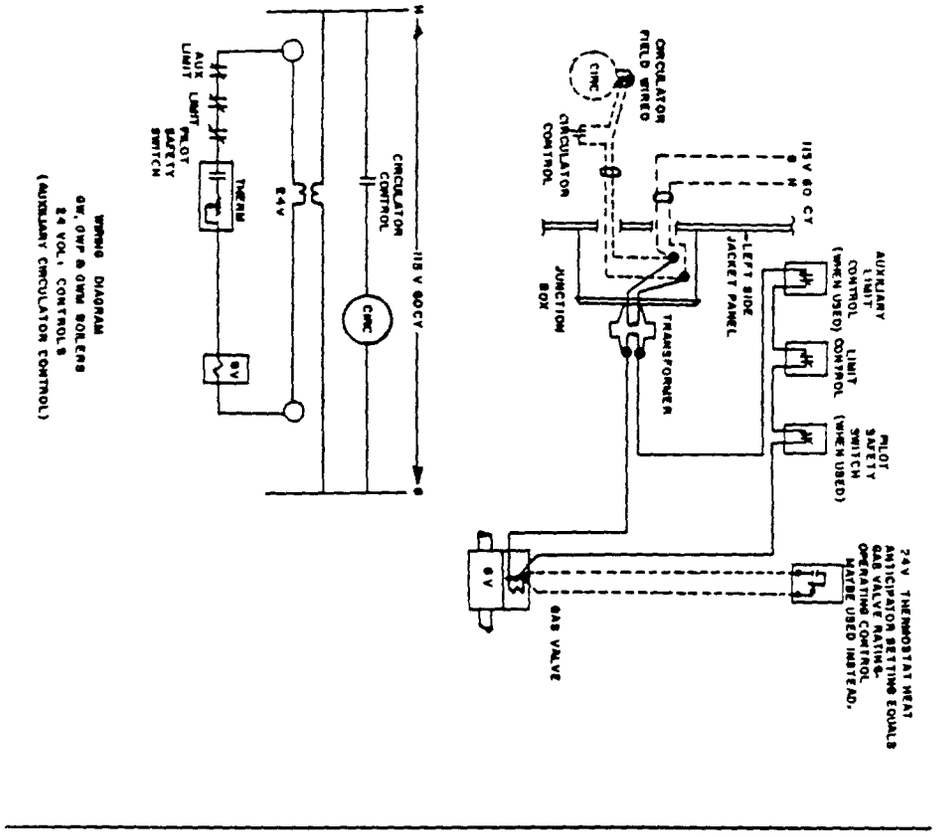
WIRING DIAGRAM
GW, GWP & GWPH BOILERS
24 VOLT CONTROLS
(AUXILIARY CIRCULATOR CONTROL)
AUX LIMIT
PILOT SAFETY SWITCH
THERM
24V
6V
CIRCULATOR CONTROL
115 V 60 CY
CIRC
CIRCULATOR FIELD WIRED
JUNCTION BOX
TRANSFORMER
LEFT SIDE JACKET PANEL
AUXILIARY LIMIT CONTROL (WHEN USED)
LIMIT CONTROL
PILOT SAFETY SWITCH (WHEN USED)
24V THERMOSTAT HEAT ANTICIPATOR SETTING EQUALS GAS VALVE RATING. OPERATING CONTROL MAYBE USED INSTEAD.
GAS VALVE

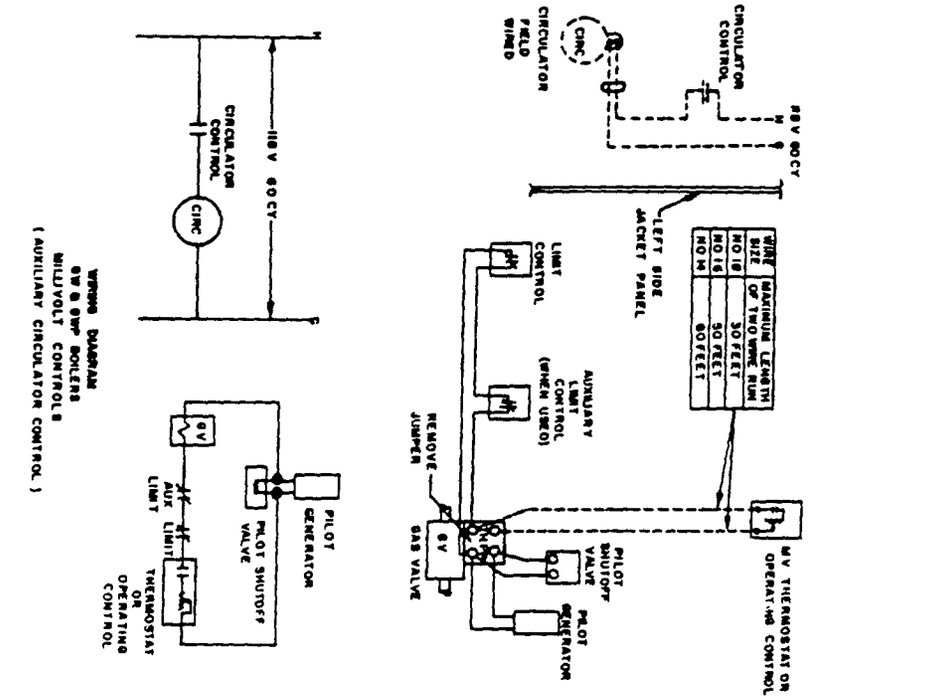
WIRING DIAGRAM
GW, GWP & GWPH BOILERS
MILLIVOLT CONTROLS
(AUXILIARY CIRCULATOR CONTROL)
CIRCULATOR CONTROL
115 V 60 CY
CIRC
AUX LIMIT
THERMOSTAT OR OPERATING CONTROL
PILOT SHUTOFF VALVE
PILOT GENERATOR
6V
CIRCULATOR FIELD WIRED
LEFT SIDE JACKET PANEL
WIRE SIZE
MAXIMUM LENGTH OF TWO WIRE RUN
NO 18
NO 16
NO 14
50 FEET
50 FEET
80 FEET
LIMIT CONTROL
AUXILIARY LIMIT CONTROL (WHEN USED)
REMOVE JUMPER
GAS VALVE
MV THERMOSTAT OR OPERATING CONTROL

FIG. J3

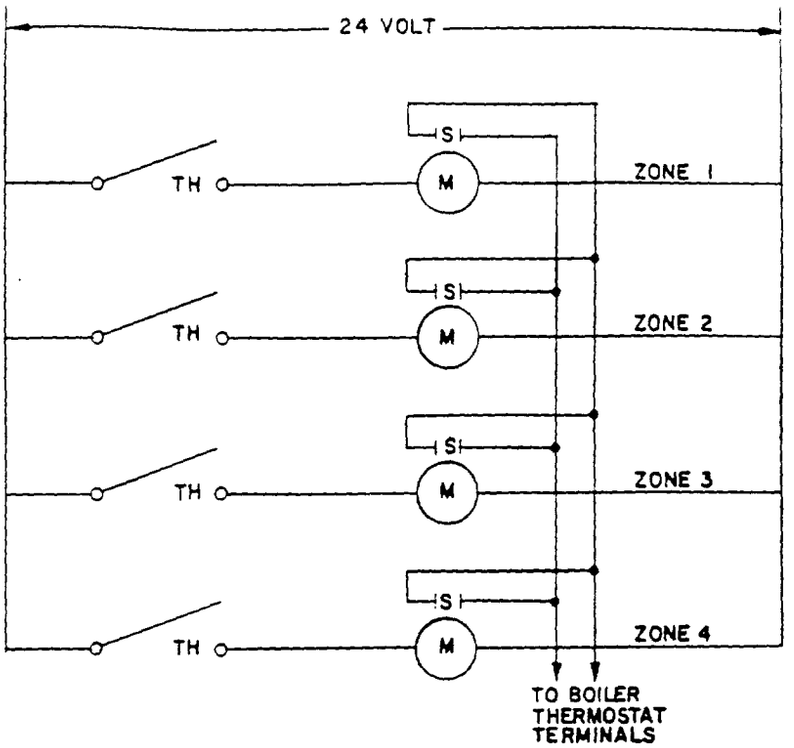

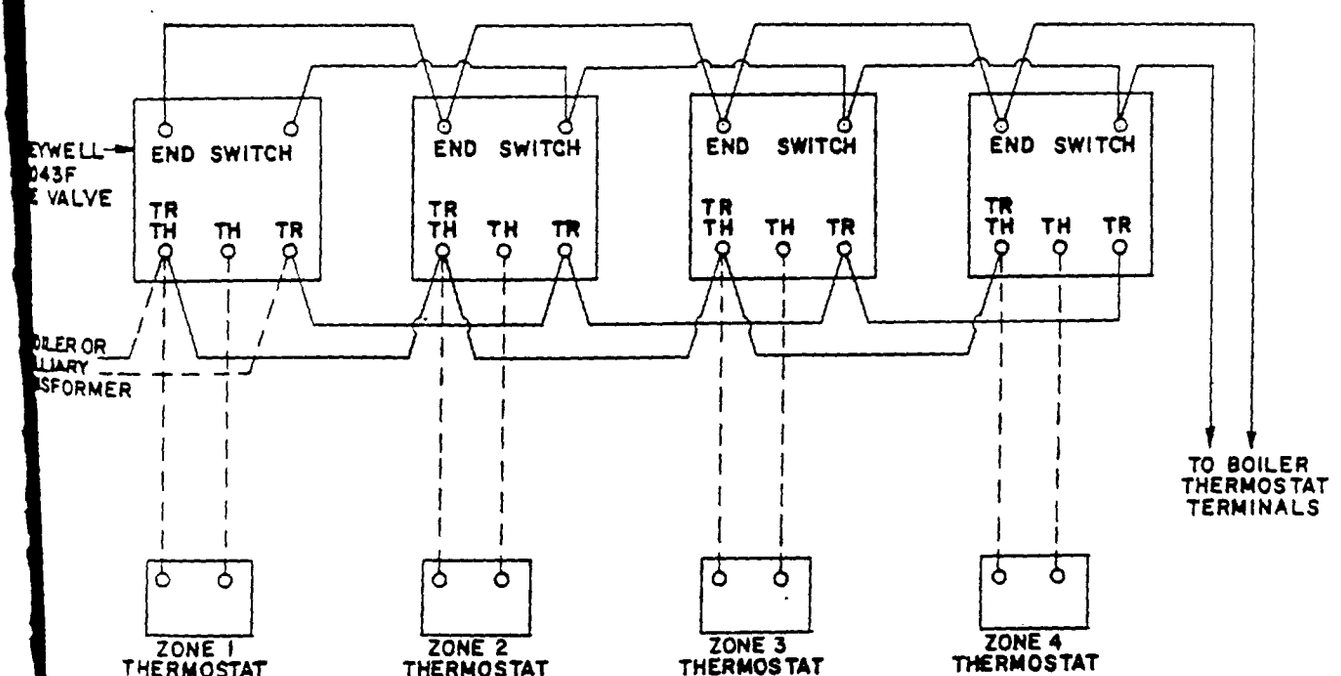

NOTE: WIRES MUST CLEAR THE MANUAL OPENING LEVER OF EACH ZONE VALVE AND ALL LEVERS MUST BE FACTORY PRESET IN THE "MAN OPEN" POSITION PRIOR TO PACKING.

ZONE VALVE WIRING DIAGRAM

FIG. 14

06510

FILLING SYSTEM (GENERAL INFORMATION)

CAUTION: Never start boiler unless it is properly filled. After boiler is in operation make-up water should be added slowly.

When filling a system, the pressure must not exceed 50 lbs. If it does, it must be relieved immediately and the relief valve failure investigated and corrected, otherwise pressure may build up and cause damage to heating system.

The owner should occasionally check the readings on the press-temp gauge. The higher range scale indicates the water temperature within the boiler; and, should the water exceed 250°F, operation must be discontinued until the system is checked and the fault corrected. The lower range scale indicates the pressure within the system and should not exceed 50 lbs. (100 lbs. with 100 lb. relief valve).

In a closed system the boiler and piping are entirely filled with water except for a cushion of air in the upper portion of the expansion tank. When the water is heated, it expands, compressing the air. If, for any reason, this air were completely displaced from the tank there would no longer be a cushion. In that event an increase in water temperatures would cause a corresponding increase in volume and pressure would force the relief valve open to discharge the excess volume. To correct such a condition, the expansion tank must be drained enough to permit the tank to fill with air.

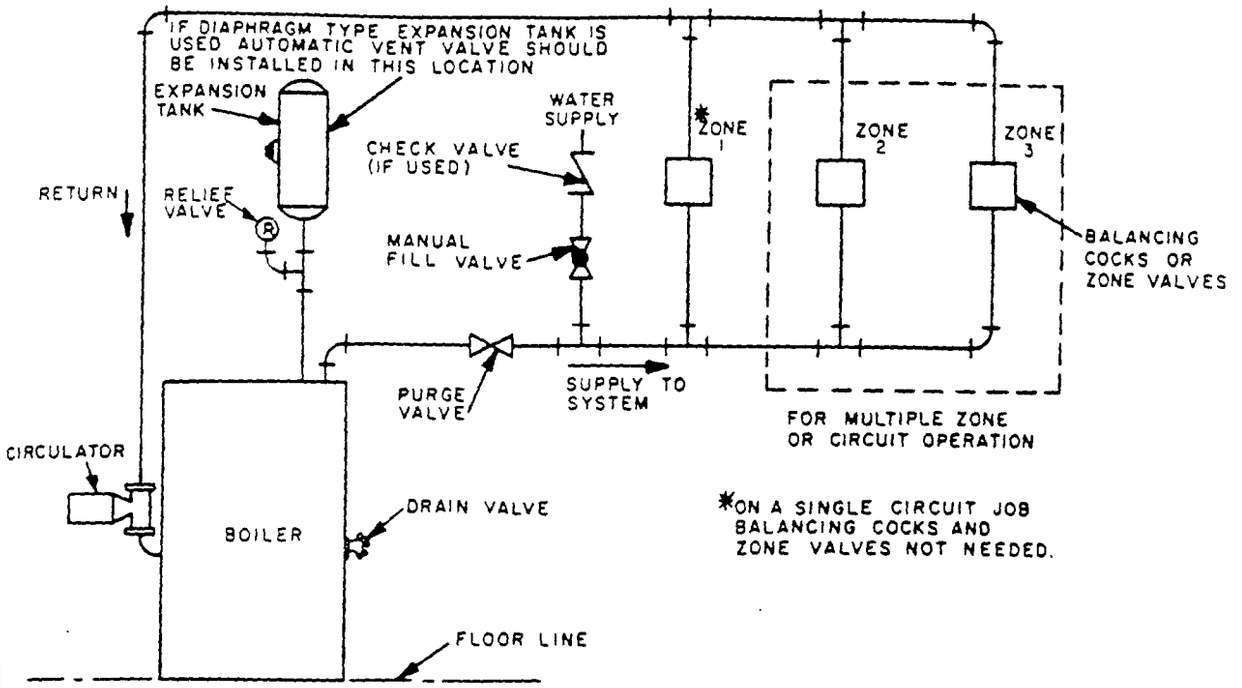

FIG. 15

FILLING SERIES LOOP SYSTEM

The following procedure should be used to fill a series loop Heatrim system (See Fig. 15)

1. Close all zone valves except the one for the zone to be filled with water and purged of air.
2. Open the drain valve on the boiler.
3. Open the fill valve.
4. Close the purge valve.
5. Open the relief valve.
6. Open the valve to the second zone to be purged; then close the first. Repeat this step until all zones have been purged of air and filled with water; but always have one zone open. (Zones are purged and filled when water can be felt in the pipe at the end of the zone.)
7. Close the drain valve.
8. When water appears, release the lever on the relief valve, allowing it to close.
9. Continue filling the system until the pressure gauge reads 12 psi without heat or 25 psi at 200°F; close the fill valve.
10. Open the purge valve.

Following the completion of the installation, a thorough check should be made of the entire hydronic system to locate possible leaks.

NOTE: For a single loop Heatrim system no additional vents, cocks, valves or other accessories are required.

PIPING ARRANGEMENT AND LIGHTING INSTRUCTIONS
24 VOLT SYSTEM
8, 9, and 10 SECTION - NATURAL GAS
10 SECTION - PROPANE GAS

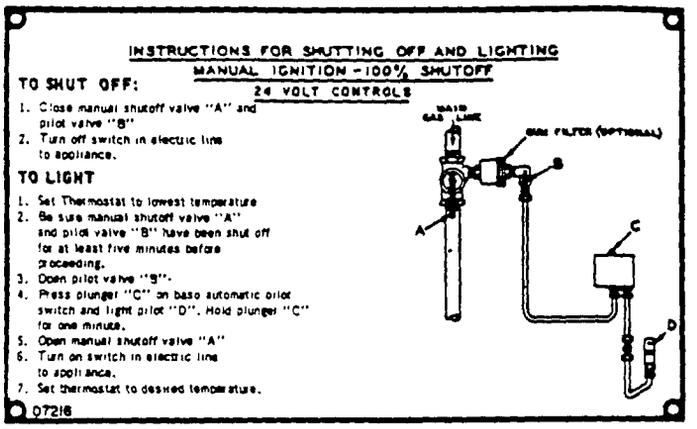

FIG. 16

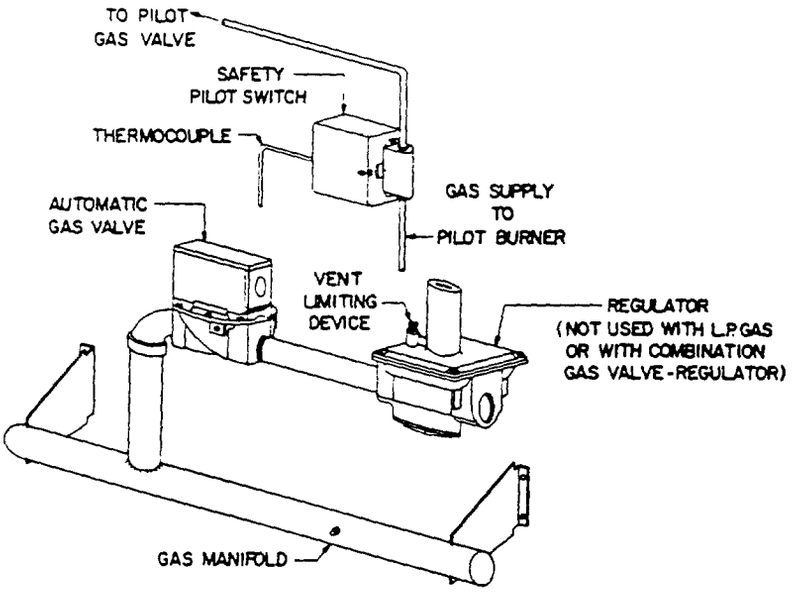

ASSEMBLY OF GAS VALVE AND MANIFOLD - 24 VOLT SYSTEM

FIG. 17

PIPING ARRANGEMENT AND LIGHTING INSTRUCTIONS

S. E. SYSTEM

8, 9, and 10 SECTION - NATURAL GAS
10 SECTION - PROPANE GAS

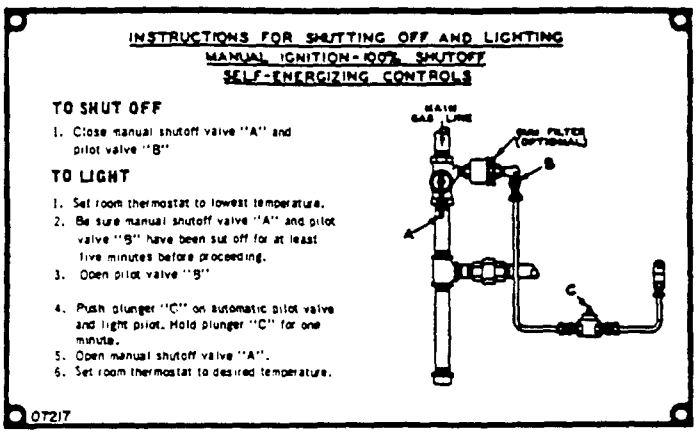

FIG. 18

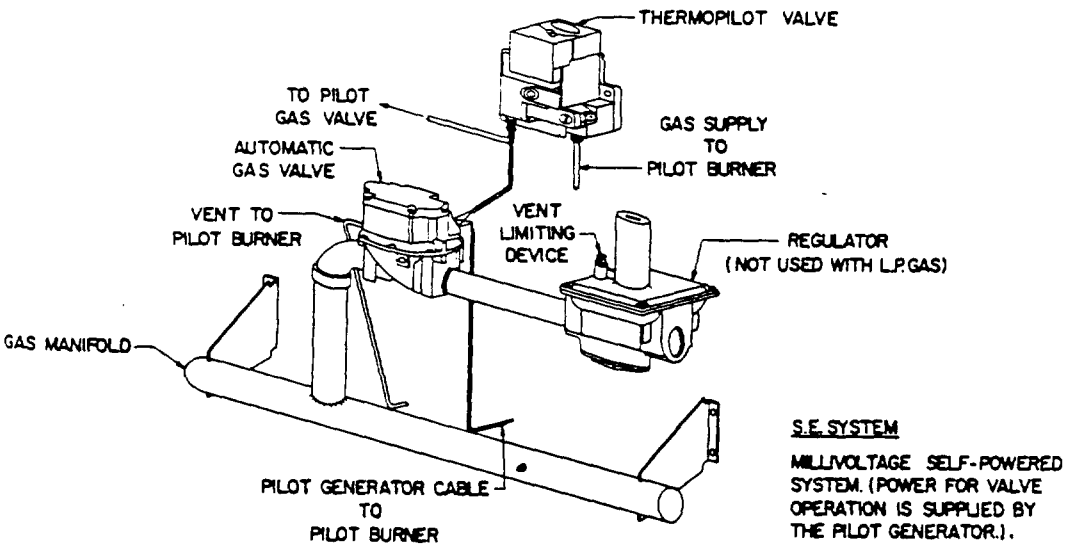

ASSEMBLY OF GAS VALVE AND MANIFOLD S.E. SYSTEM

FIG. 19

PIPING ARRANGEMENT AND LIGHTING INSTRUCTIONS

24 VOLT AND S. E.

8, 9, and 10 SECTION PROPANE GAS (LESS PRESSURE REGULATOR)

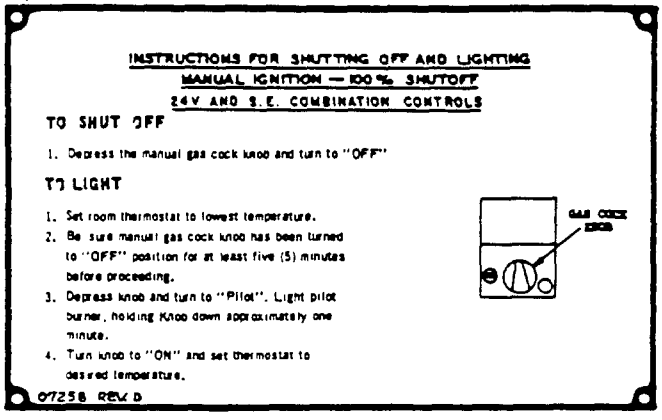

INSTRUCTIONS FOR SHUTTING OFF AND LIGHTING
MANUAL IGNITION — 100% SHUTOFF
24V AND S.E. COMBINATION CONTROLS

TO SHUT OFF

1. Depress the manual gas cock knob and turn to "OFF"

TO LIGHT

1. Set room thermostat to lowest temperature.
2. Be sure manual gas cock knob has been turned to "OFF" position for at least five (5) minutes before proceeding.
3. Depress knob and turn to "Pilot". Light pilot burner, holding Knob down approximately one minute.
4. Turn knob to "ON" and set thermostat to desired temperature.

07258 REV D

FIG. 20

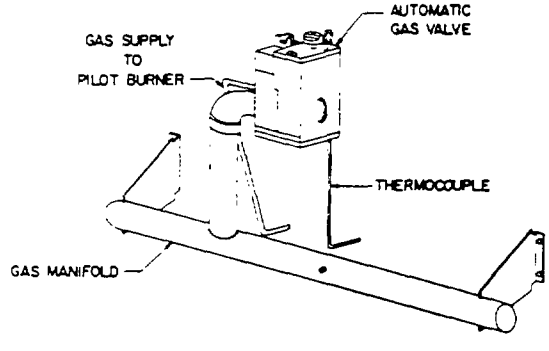

ASSEMBLY OF COMBINATION CONTROL AND MANIFOLD 24 VOLT SYSTEM

COMBINATION CONTROL

COMBINATION AUTOMATIC PILOT, PRESSURE REGULATOR, AUTOMATIC GAS VALVE, AND MANUAL SHUTOFF VALVE.

Fig. 21

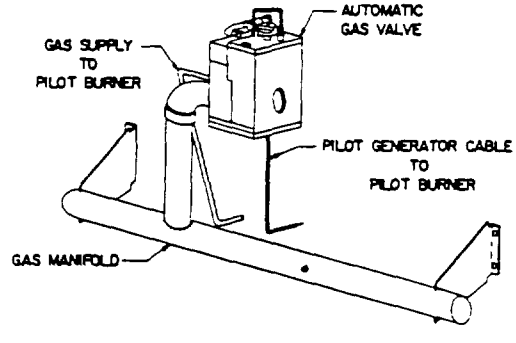

ASSEMBLY OF COMBINATION CONTROL AND MANIFOLD S.E. SYSTEM

COMBINATION CONTROL

COMBINATION AUTOMATIC PILOT, PRESSURE REGULATOR, AUTOMATIC GAS VALVE, AND MANUAL SHUTOFF VALVE.

Fig. 22

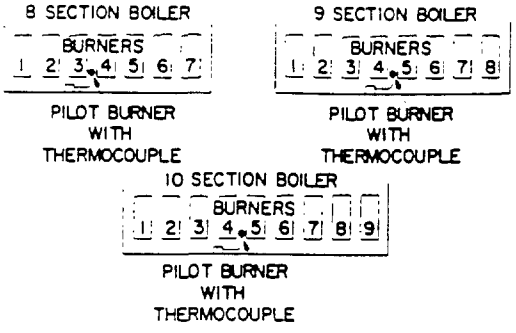

FIG. 23

PILOT LOCATION FOR ALL GASES

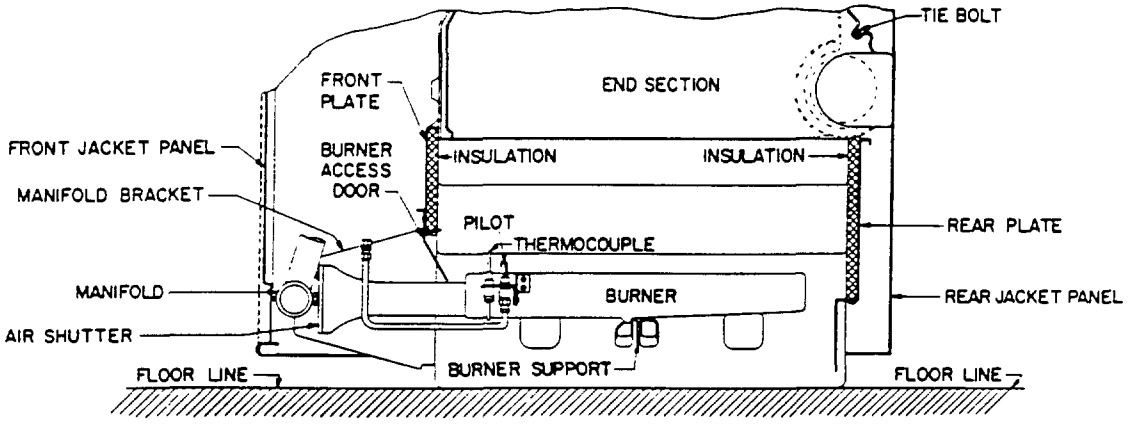

Fig. 24

BURNER AND PILOT ASSEMBLY FOR MANUAL IGNITION

PILOT BURNER

Location and assembly is shown in Figs. 23 and 24.

PILOT ADJUSTMENT

Light boiler as directed in operating instructions and check for gas leaks. Adjust pilot flame to extend over top of burner. Pilot rate adjusting screw is located on combination control or pilot throttling cock.

NORMAL INPUT FOR PILOT BURNERS

	NAT.	Propane
Input per Burner Btu/Hr.	1400	1000

MANIFOLD PRESSURE ADJUSTMENT FOR MAIN BURNER INPUT

After boiler is warmed up, shut off all other gas appliances connected to gas meter and time gas consumption. Boiler input should be adjusted at rated input as indicated on nameplate in accordance with procedure outlined below.

$$\text{Gas Consumption (Cubic Feet per Hr.)} = \frac{\text{INPUT RATING (Btu per Hr.)}}{\text{Heating Value of Gas (Btu per Cu. Ft.)}}$$

1/8" pipe plug is placed in the manifold to provide for checking the gas pressure in the manifold with a manometer or small pressure gauge. The manifold pressure should be set at 3.5 inches of water for natural gas. To adjust the pressure, remove the cap on the gas pressure regulator and screw in the adjusting screw to raise pressure or screw out the adjusting screw to lower pressure. Only small variations in gas flow should be made by means of the gas pressure regulator adjustment. In no case should the final manifold pressure vary more than plus or minus 0.3 inches water column from the above specified pressure. Any necessary major changes in the flow should be made by changing the size of the burner orifice. Refer to combination control instruction sheet for making regulator adjustments.

MAIN BURNER AIR ADJUSTMENT

Drill port burners are normally used with natural gas. To adjust the air setting, allow 5 minutes for the burners to heat up; open the air shutter until flame lifts off the burner (too much air), then close until the flame returns to the burner. There should be no yellow in the flame. (Orange appearance is caused by lint and dust particles in air and does not affect normal performance).

Ribbon burners - Propane gas
Propane burner flames must be adjusted properly to prevent excessive burner temperatures. Adjust the air shutter to a blue-green inner flame without yellow in flame. (Refer to Fig. 25)

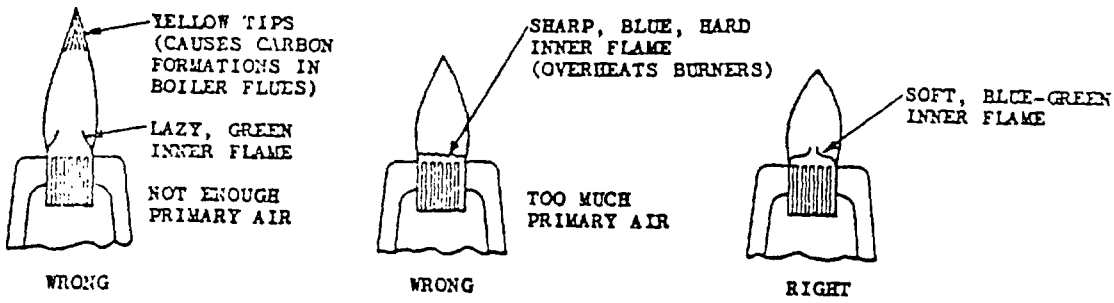

FIG. 25

Ribbon burners - Natural gas
Adjust air shutter to give sharp blue flame with no yellow. For natural gas, good performance is usually obtained with air shutter set to maximum open position.

TEMPERATURE LIMIT CONTROL

The temperature limit control is located in the upper left corner of the control vestibule. The limit control can be checked and adjusted by removing the front door. If replacement is necessary, more ready access is obtained by:

1. Removing jacket top panel screws on each side.
2. Lifting top panel in front only until side panels can be moved outward approximately 1/4 inch allowing upper front panel to be removed.
3. Limit control is now completely exposed for service.
4. Replace panels and screws in reverse order.
5. Set limit control to 220°F or lower, if desired.

MAINTENANCE

GENERAL

IT IS IMPORTANT THAT THIS BOILER BE INSPECTED ONCE A YEAR BY A COMPETENT SERVICEMAN TO INSURE CONTINUED RELIABLE, SAFE OPERATION.

This inspection should include checking of all boiler safety controls, pilot,section flueways and burners. See next page for instructions on burner and section inspection and cleaning.

IN FALL BEFORE STARTING BOILER

Drain system sufficiently to remove sludge in bottom of boiler. Do not drain more water than necessary to remove sludge, then refill to proper level as directed in this manual.

MAINTENANCE OF BOILER WHILE IN OPERATION

Check water level regularly and add water slowly when needed. If water must be added frequently, check system for leaks. This boiler is fired automatically.

IN WINTER WHILE NOT IN OPERATION

Drain entire system to prevent damage from freezing. Drain through drain cocks located at lowest point in system. Be sure boiler is completely drained.

IN SUMMER WHILE NOT IN OPERATION

Keep the system filled as during the heating season. This is the recommended time to have a periodic check up of all safety controls and a close inspection of the burners, flue passageways, and flue pipe. It is also good practice to recheck the input firing rate and the gas air mixture on the burners to see that the boiler is operating at normal efficiency.

GENERAL MAINTENANCE OF HEATING SYSTEM

Keep radiators and convectors clean.

If a hot water radiator is hot at the bottom but not at the top, it indicates that air has accumulated inside and should be vented. To vent radiator hold small cup under air vent (located near top of radiator), open vent until water escapes and then close. Fill hot water systems only as directed in this manual.

If much water is added to system, it is advisable to heat system to a high temperature and vent again. This will make less venting necessary during the winter.

INSPECTION AND CLEANING OF BOILER BURNERS AND FLUEWAYS

For maximum efficiency and safe operation, burners and boiler flue passages should be inspected and cleaned, if necessary, once a year.

Inspection Procedure:

1. Turn manual shutoff valve and pilot shutoff valve to off positions.
2. Remove lower front panel from boiler by lifting upward and pulling out.
3. Remove pilot line, vent line, and thermocouple.
4. Remove the burner access door (See Figure 24)
5. Remove burners by lifting at the rear, sliding them toward the back of the boiler until free of the spuds, and lifting them out over the manifold.
6. Check burner gas ports or ribbons for lint and dirt.
7. Section cleanliness can be checked with a mirror and light inserted in the opening where the burners have been removed.

BURNER CLEANING

If burner inspection reveals rust scale or lint present, clean as follows:

1. Drilled Port Burner - Pass a #30 or #31 drill through the ports and shake any dislodged material out through the mixing tube.
2. Ribbon Burners - Remove ribbon hold down clamps and then remove ribbons. Separate ribbons by fanning out and clean with wire brush. Reassemble to burner.

SECTION CLEANING

If section inspection reveals soot or scale, clean as follows:

1. IMPORTANT - BE SURE TO REMOVE BURNERS BEFORE PROCEEDING.
2. Remove flue pipe, jacket top, and canopy-drafthood assembly.
3. Clean sections with a wire flue brush.
4. Reassemble, carefully locating all parts.
5. Install burners and light pilot.
6. Check burner air adjustment as directed in this manual.

DEALER'S NAME: _____

ADDRESS: _____

TELEPHONE NO.: _____

DATE OF INSTALLATION: _____

AMERICAN STANDARD

PLUMBING & HEATING DIVISION

40 WEST 40TH STREET • NEW YORK, N.Y. 10018