technical catalog bulletin

AMERICAN STANDARD

G-40

gas fired boilers

hot water or steam

PLAINTIFF'S EXHIBIT

ASI-117

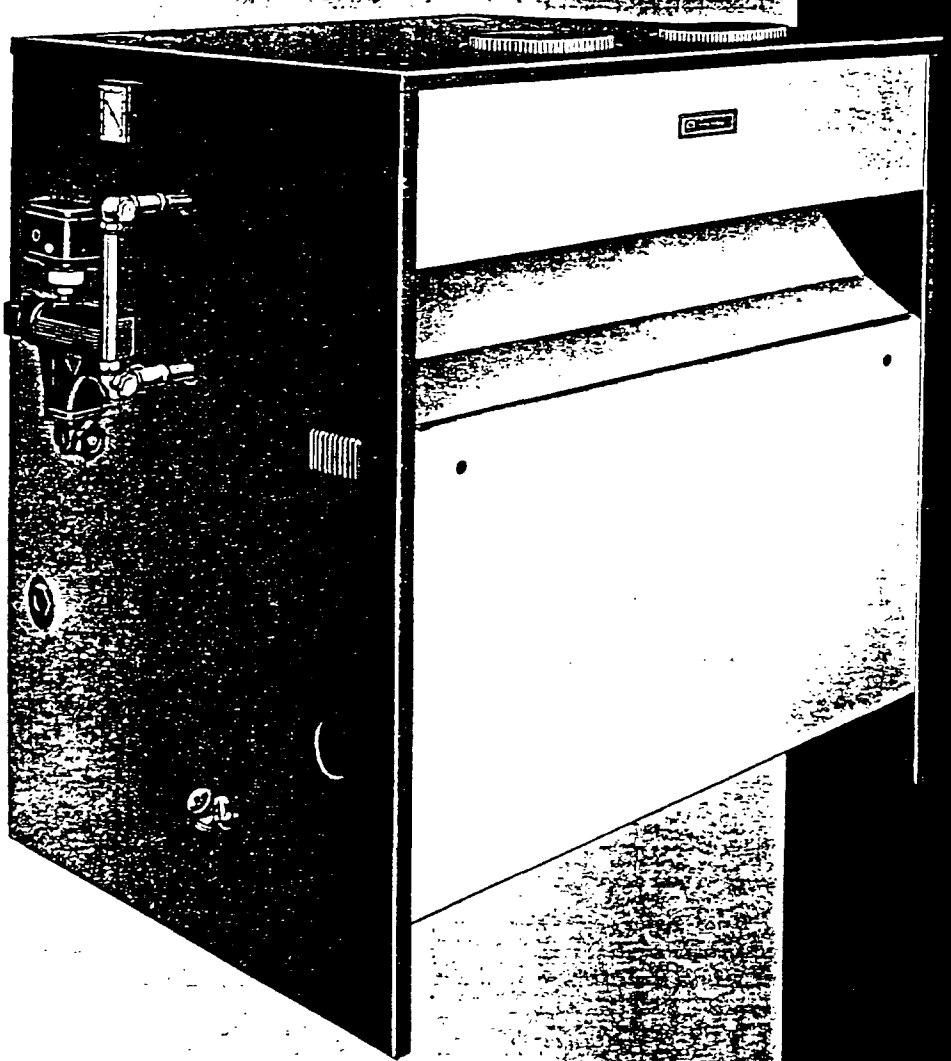

A.I.A. Form No. 30-C-1 [February, 1971]

The G-40 gas boiler— [illegible] and installation time

The new G-40 gas boiler by American-Standard is suitable for installation in larger residences and small apartment and commercial buildings. Designed for both hot water and steam installations, it can be furnished with a tankless type, internal, domestic water heater for either application. An attractive two-tone boiler jacket gives the G-40 a clean, streamlined appearance.

Ruggedly constructed of durable cast iron, the new G-40 is available in 3 to 14 section sizes with A.G.A. design certified outputs from 120,000 to 780,000 btu/hr. All sections are tested for 50 psi water working pressure. On-site assembling time can be decreased by ordering up to 14 sections pre-assembled, with or without factory-installed tankless heater. An exclusive built-in air eliminator—the ELIMINAIRE—is furnished on all boilers, specifically for hot water installations, saving the additional expense of an external device.

The G-40 is provided with two 3" top flow tappings and two 3" return flow tappings to allow flexibility in designing system piping when the G-40 is installed in confined areas. For further convenience, complete manifold and all controls are shipped factory assembled. Self-energizing controls and electronic controls are available as options.

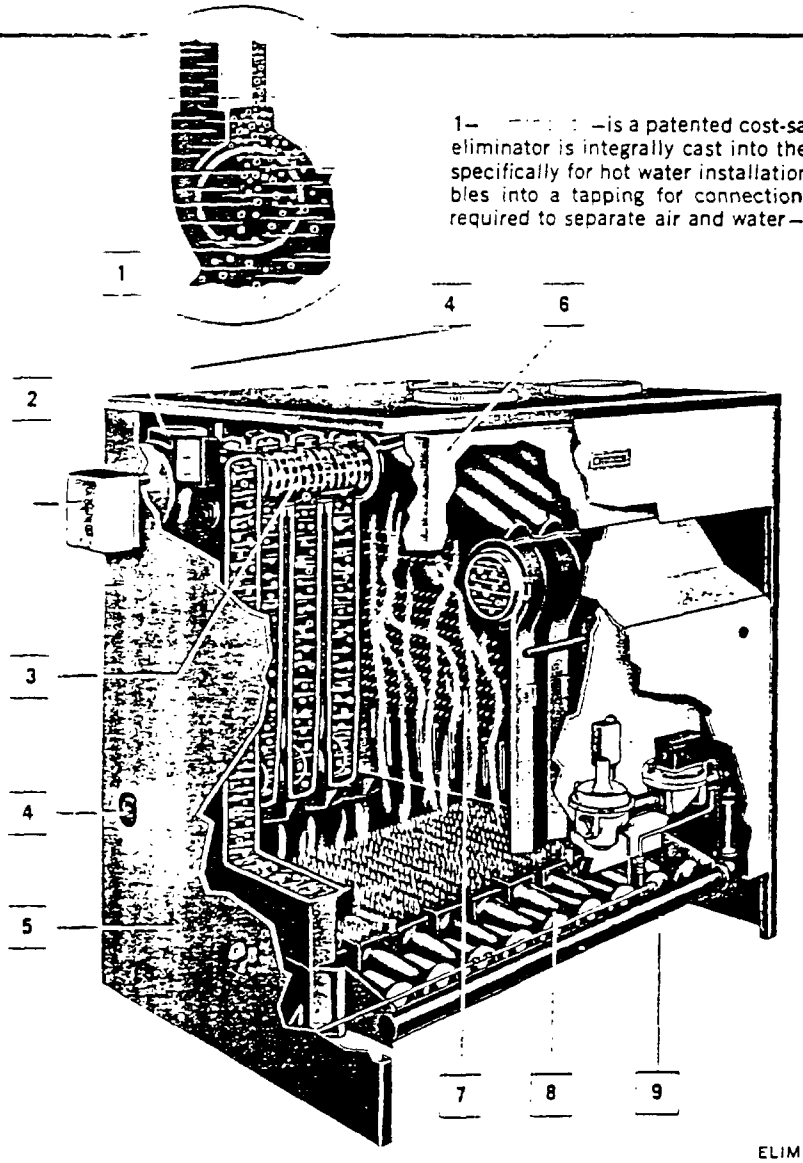

1— [illegible] —is a patented cost-saving feature of the G-40. This unique built-in air eliminator is integrally cast into the left hand end section. Furnished in all boilers, specifically for hot water installations, the ELIMINAIRE baffle diverts rising air bubbles into a tapping for connection to the expansion tank. No external device is required to separate air and water—thus reducing both costs and installation time.

2— [illegible]ntrols—mounted on front and left side of boiler for easy adjustment and maintenance. Optional electronic controls and self-energizing controls available.

3— [illegible]ater heater—large, finned copper coil tankless type available for steam or water installations. Inserted where hottest water is in contact with heater coil.

4— [illegible]ppings—two 3" supply (top) and two 3" return tappings (side) simplify piping hook-up.

5— [illegible]acket—sturdy steel with smart beige and brown finish, modern square corners. Inner surfaces protected with heavy glass fiber insulation—prevents wasteful heat loss, keeps jacket cool.

6— [illegible]uilt-in draft hood—completely enclosed in jacket; eliminates unsightly protrusion in rear of boiler.

7— [illegible]ast iron sections—multiple pin-like projections for maximum heat extraction. Tested for 50 psi water working pressure. End sections designed with extended legs to eliminate need for separate base.

8— [illegible]urners—precision made and factory tested to assure quiet, efficient operation with all gases. Cast iron, drilled port burners supplied for natural gas. Cleanable ribbon burners standard for propane gas.

9— [illegible]actory assembled manifold and controls —only requires attachment to boiler. Completely enclosed by jacket.

ELIMINAIRE® is a trademark of AMERICAN STANDARD Inc.

G-40 ratings (natural and propane gases)

boiler number	no. of sections	no. of burners	for installations from sea level to 2000 ft. ■ A.G.A. ratings input (Btu/hr)	A.G.A. ratings output (Btu/hr)	net I=B=R ratings▲ water (Btu/hr)	net I=B=R ratings▲ steam (sq. ft.)	net I=B=R ratings▲ steam (Btu/hr)	chimney diameter (inches)	chimney height (feet)
G-403	3	2	150,000	120,000	104,300	375	90,000	8	15
G-404	4	3	225,000	180,000	156,500	563	135,000	8	15
G-405	5	4	300,000	240,000	208,700	750	180,000	8	15
G-406	6	5	375,000	300,000	260,900	938	225,100	10	15
G-407	7	6	450,000	360,000	313,000	1125	270,100	10	15
G-408	8	7	525,000	420,000	365,200	1313	315,100	10	15
G-409	9	8	600,000	480,000	417,400	1500	360,100	10	15
G-4010	10	9	675,000	540,000	469,600	1688	405,100	12	15
G-4011	11	10	750,000	600,000	521,800	1875	450,000	12	15
G-4012	12	11	825,000	660,000	574,000	2063	495,200	12	15
G-4013	13	12	900,000	720,000	626,200	2250	540,000	12	15
G-4014	14	13	975,000	780,000	678,400	2438	585,100	15	15

■ For altitudes above 2000 ft., ratings should be reduced at the rate of 4% for each 1000 ft. above sea level.

▲ Net I = B = R ratings shown are based on a piping and pick up allowance of 1.333 for steam and 1.15 for water. American-Standard should be consulted before selecting a boiler for installations having unusual piping and pick up requirements.

G-40 tankless heater ratings

boiler number	100°F rise in temperature with 200°F boiler water temperature (gallons per minute) heater no. 218 water	heater no. 218 steam	heater no. 222 water	heater no. 222 steam	heater no. 226 water	heater no. 226 steam	heater no. 232 water	heater no. 232 steam	heater no. 445 water	heater no. 445 steam	heater no. 460 water	heater no. 460 steam
G-403	4	3	—	—	—	—	—	—	—	—	—	—
G-404	4	3½	4½	4	—	—	—	—	—	—	—	—
G-405	4	3½	4½	4	6	5½	—	—	—	—	—	—
G-406	4	3½	4½	4	6	5½	—	—	—	—	—	—
G-407	4	3½	4½	4	6½	6	7½	7	—	—	—	—
G-408	4	3½	4½	4	6½	6	8	7½	9	8½	—	—
G-409	4	3½	4½	4	6½	6	8	7½	9	8½	—	—
G-4010	4	3½	4½	4	6½	6	8	7½	9	8½	—	—
G-4011	4	3½	4½	4	6½	6	8	7½	9	8½	12	11
G-4012	4	3½	4½	4	6½	6	8	7½	9	8½	13	12
G-4013	4	3½	4½	4	6½	6	8	7½	9	8½	14½	13
G-4014	4	3½	4½	4	6½	6	8	7½	9	8½	15½	13

NOTE: For Steam boiler-heater combinations shown shaded, extra aquastat in right end section is recommended.

G-40 gas boilers by American-Standard have ratings approved by the Institute of Boiler and Radiator Manufacturers. The boilers are constructed to the specifications of the American Society of Mechanical Engineers and are design certified by the American Gas Association. The G-40 bears the I=B=R, A.S.M.E. and A.G.A. symbols. All sizes of the G-40 are available in models for forced and gravity hot water, and steam systems.

sample specification for G-40

Contractor shall furnish and install, as indicated on plans, ...gas fired boiler(s), having an input of.....Btuh and a gross output of.....Btuh when fired with..... gas. Boiler(s) shall be constructed of cast iron in accordance with A.S.M.E. requirements for low pressure heating boilers and bear the A.S.M.E. symbol. Boiler(s) shall be A.G.A. design certified and have I=B=R approved ratings. Boiler(s) shall be furnished with an air elimination device integrally cast into the left hand end supply tapping. Boiler(s) shall be composed of cast iron sections with vertical flues and furnished with one atmospheric drill port or removable ribbon burner per flueway. Boiler(s) shall be supplied by manufacturer with one main automatic diaphragm gas valve, safety pilot with thermocouple and additional lighting pilots as required, one gas pressure regulator (except for propane gas), high limit control, and integral canopy and drafthood. Water or steam trim as required.

Boiler(s) shall be supplied with internal type tankless heater capable of supplying.....gallons per minute at a 100°F rise in temperature.

minimum piping recommendations

hot water

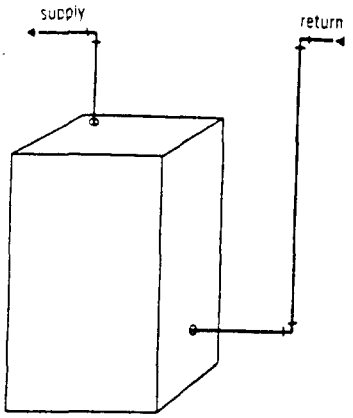

boiler number	gravity		forced	
	supply (in.)	return (in.)	supply (in.)	return (in.)
G-403	2	2	1¼	1¼
G-404	2	2	1½	1½
G-405	2½	2½	2	2
G-406	(2)-2	(2)-2	2	2
G-407	(2)-2	(2)-2	2	2
G-408	(2)-2	(2)-2	2½	2½
G-409	(2)-2½	(2)-2½	2½	2½
G-4010	(2)-2½	(2)-2½	2½	2½
G-4011	(2)-3	(2)-2½	3	3
G-4012	(2)-3	(2)-2½	3	3
G-4013	(2)-3	(2)-2½	3	3
G-4014	(2)-3	(2)-2½	3	3

NOTE: Left hand supply connection featuring the ELIMINAIRE is used on water boilers. Limit control should also be placed in the left hand section. Where both outlets and return are used on gravity systems, make respective supply and return connection at opposite ends of the boiler.

boiler number	riser (in.)	return (in.)	equal-izer (in.)
G-403	2	1	1½
G-404	2½	1	1½
G-405	2½	1	1½
G-406	3	1¼	1½
G-407	3	1¼	1½

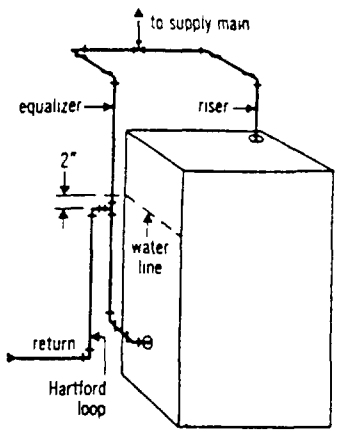

boiler number	riser (in.)	return (in.)	header (in.)	equal-izer (in.)
G-408	(2)-2	1½	4	1½
G-409	(2)-2	1½	4	2
G-4010	(2)-3	1½	4	2
G-4011	(2)-3	1½	4	2
G-4012	(2)-3	1½	4	2
G-4013	(2)-3	1½	4	2
G-4014	(2)-3	1½	4	2

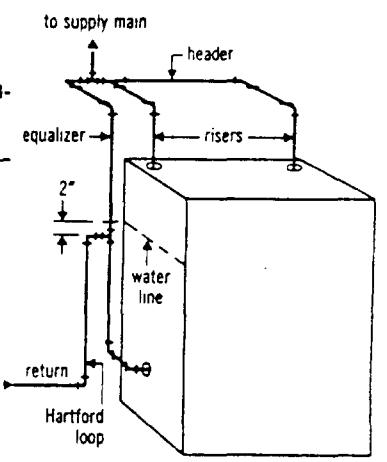

gas control and connection sizes; pertinent data

boiler number	water content (pounds)		approx. weight (pounds)	size of manifold (inches)	pressure regulator■ (inches)	automatic gas valve, gas connections and manual shutoff valve sizes (inches)	
	water	steam		nat. & propane gases	nat.	nat.	propane
G-403	220.8	164.4	858	1¼	½	½	½
G-404	281.0	209.9	1027	1¼	¾	¾	½
G-405	341.2	255.4	1195	1¼	1	1	½
G-406	401.4	300.9	1370	1¼	1	1	¾
G-407	461.6	346.4	1544	1¼	1	1	¾
G-408	521.8	391.9	1713	1¼	1	1	¾
G-409	582.0	437.4	1880	1¼	1¼	1¼	1
G-4010	642.2	482.9	2050	1¼	1¼	1¼	1
G-4011	722.4	528.4	2219	1½	1¼	1¼	1
G-4012	782.6	573.9	2388	1½	1¼	1¼	1
G-4013	842.8	619.4	2557	1½	1¼	1¼	1
G-4014	903.0	664.9	2726	1½	1¼	1¼	1

■ Pressure regulator not furnished for Propane gas.

AMERICAN STANDARD

dimensions for inlets and outlets

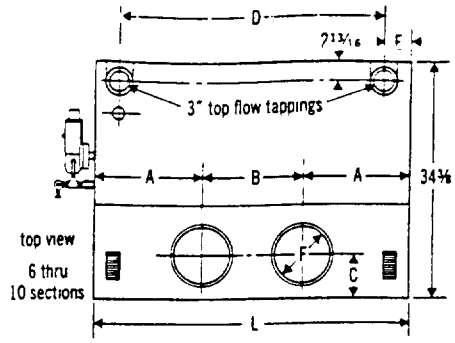

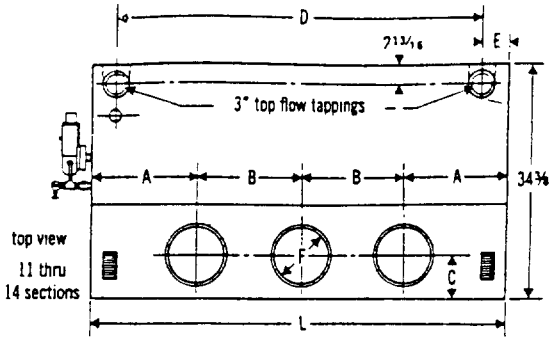

boiler number	dimensions (inches)						
	A	B	C	D	E	F	L
G-403	7 13/16	—	5 5/16	9 1/2	3 1/16	6	15 5/8
G-404	10 5/16	—	5 13/16	14	3 1/16	7	20 5/8
G-405	12 5/16	—	6 5/16	18 1/2	3 1/16	8	25 1/8
G-406	10 5/16	10	5 5/16	23	3 13/16	7	30 5/8
G-407	12 5/16	11	5 13/16	27 1/2	3 13/16	8	35 1/8
G-408	13 5/16	12 1/2	5 13/16	32	3 13/16	8	39 5/8
G-409	14 5/16	15	6 5/16	36 1/2	3 13/16	9	44 1/8
G-4010	16 5/16	16 1/2	6 5/16	41	3 13/16	9	48 5/8
G-4011	13 5/16	13	5 13/16	45 1/2	3 13/16	8	53 1/8
G-4012	14 13/16	14	5 13/16	50	3 13/16	8	57 5/8
G-4013	15 5/16	15 1/2	6 5/16	54 1/2	3 13/16	9	62 1/8
G-4014	16 13/16	16 1/2	6 5/16	59	3 13/16	9	66 5/8

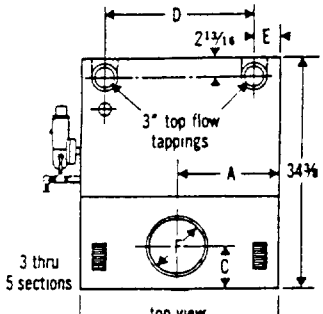

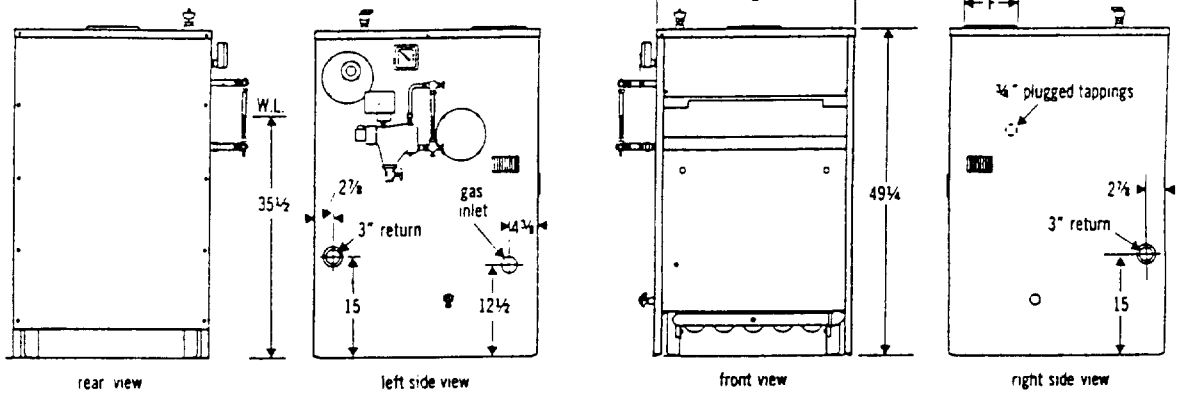

orifice drill sizes—main burner spuds (at sea level)

Input per burner (Btuh)	specific gravity of gas	natural gas					sewage gases					propane gas
		800 Btu cu. ft.	900 Btu cu. ft.	1000 Btu cu. ft.	1100 Btu cu. ft.	1200 Btu cu. ft.	600 Btu cu. ft.	650 Btu cu. ft.	700 Btu cu. ft.	750 Btu cu. ft.	800 Btu cu. ft.	2500 Btu cu. ft.
75,000	0.60	3/64	16	19	21	24	—	—	—	—	—	—
75,000	0.65	11	15	18	20	—	—	—	—	—	—	—
75,000	0.70	10	14	17	19	21	A	2	3	4	7	—
75,000	0.80	—	—	—	—	—	C	1	2	3	4	—
75,000	0.90	—	—	—	—	—	D	B	1	2	3	—
75,000	1.53	—	—	—	—	—	—	—	—	—	—	41

NOTE: Sea level ratings are to be used for elevations between 0 and 2,000 ft. For altitudes above 2,000 ft., sea level ratings should be reduced at the rate of 4% for each 1,000 ft. above sea level.

manifold pressure table

gas	heating value■	manifold pressure (in. H_2O)
natural	800—1200	3.5
propane	2500	11.0
sewage gas	600—800	3.0

■heating value of gas at sea level (60°F and 30 in. Hg.)

AMERICAN STANDARD

assemblage of sections
control tappings

assemblage of sections

boiler number	no. of sections	dimensions (inches)	
		L	K
G-403	3	13	9½
G-404	4	17½	14
G-405	5	22	18½
G-406	6	26½	23
G-407	7	31	27½
G-408	8	35½	32
G-409	9	40	36½
G-4010	10	44½	41
G-4011	11	49	45½
G-4012	12	53½	50
G-4013	13	58	54½
G-4014	14	62½	59

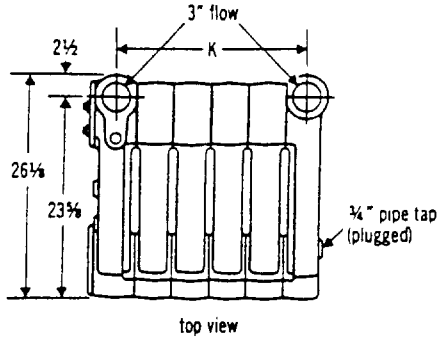

top view

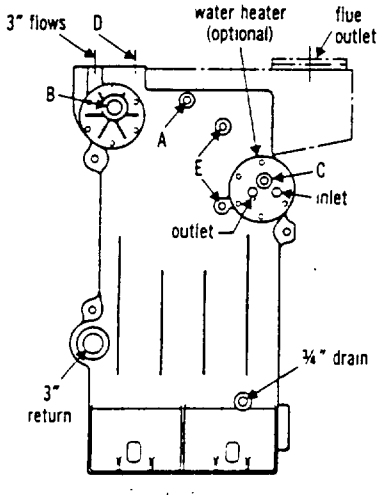

side view steam

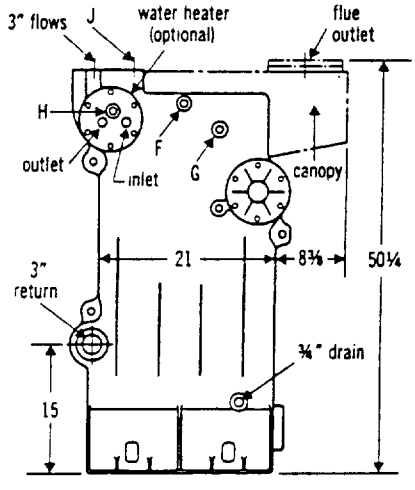

side view hot water

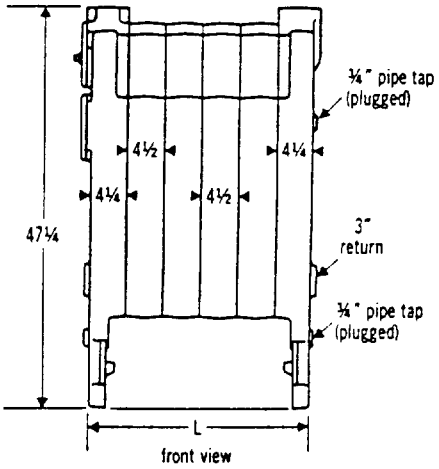

front view

control tappings (steam)

location	size of tappings (in.)	control used
A	½	pressure gauge
B	1½	blow-off ■
C	¾	tankless heater control
D	1	safety valve
E	½	gauge glass and low water cut-off

■When required, auxiliary pressure limit control is to be installed in blow-off piping.

control tappings (hot water)

location	size of tappings (in.)	control used
F	½	temperature and altitude gauge
G	½	auxiliary limit control (when required)
H	¾	combination operating, high limit and low voltage relay immersion control (for installation with tankless water heater)
		limit control (for installation without tankless water heater)
J	1	pressure relief valve

AMERICAN STANDARD
PLUMBING / HEATING

P.O. BOX 2003, NEW BRUNSWICK, N. J. 08903

orm No. 728-2 (Rev. 2) (2/71)

Printed in U.S.A.