PLAINTIFF'S
EXHIBIT
BEA—9b

AIA—12-B CSI-DIV. 7

Waterproofing and Dampproofing

Manual for Architects • Engineers • Contractors

1970

KOPPERS

Architectural and
Construction Materials

AIA—12-B CSI-DIV. 7

D DAMPPROOFING

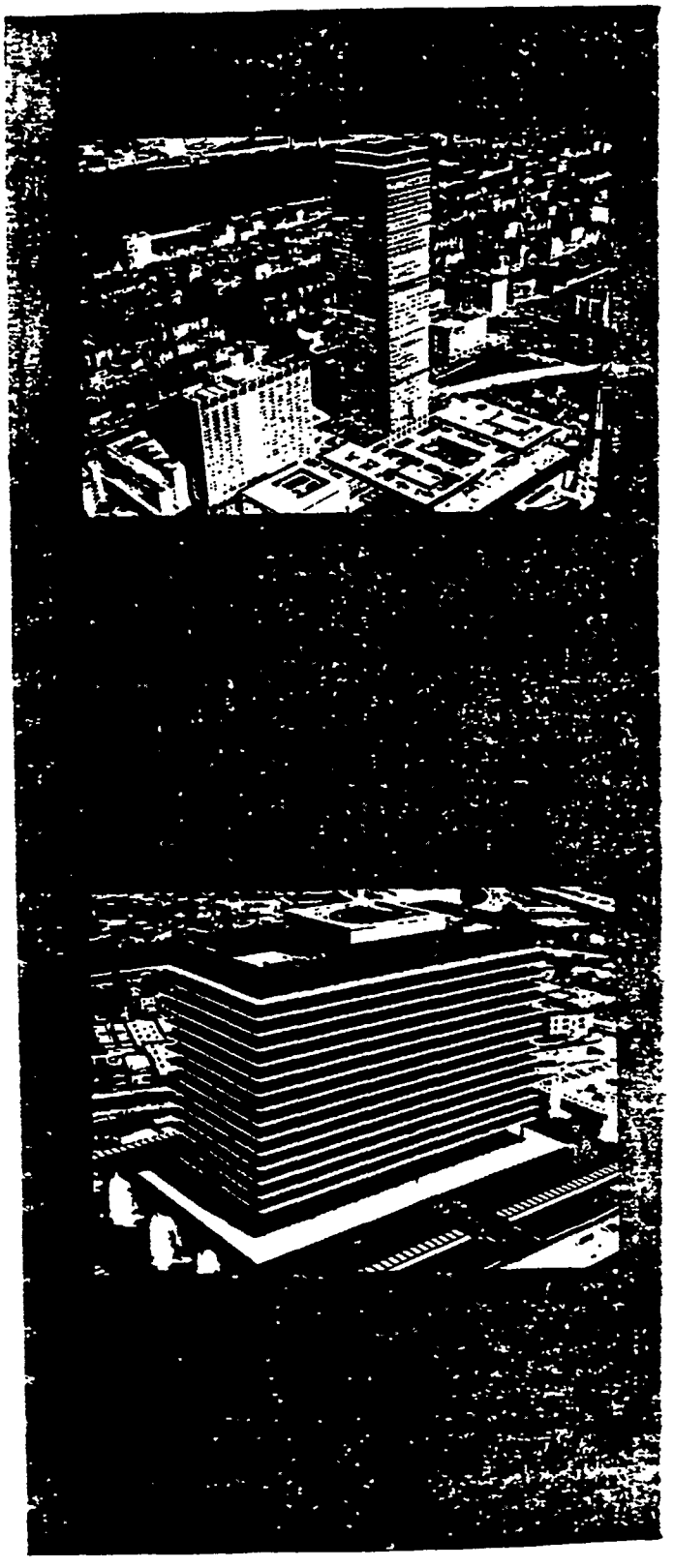

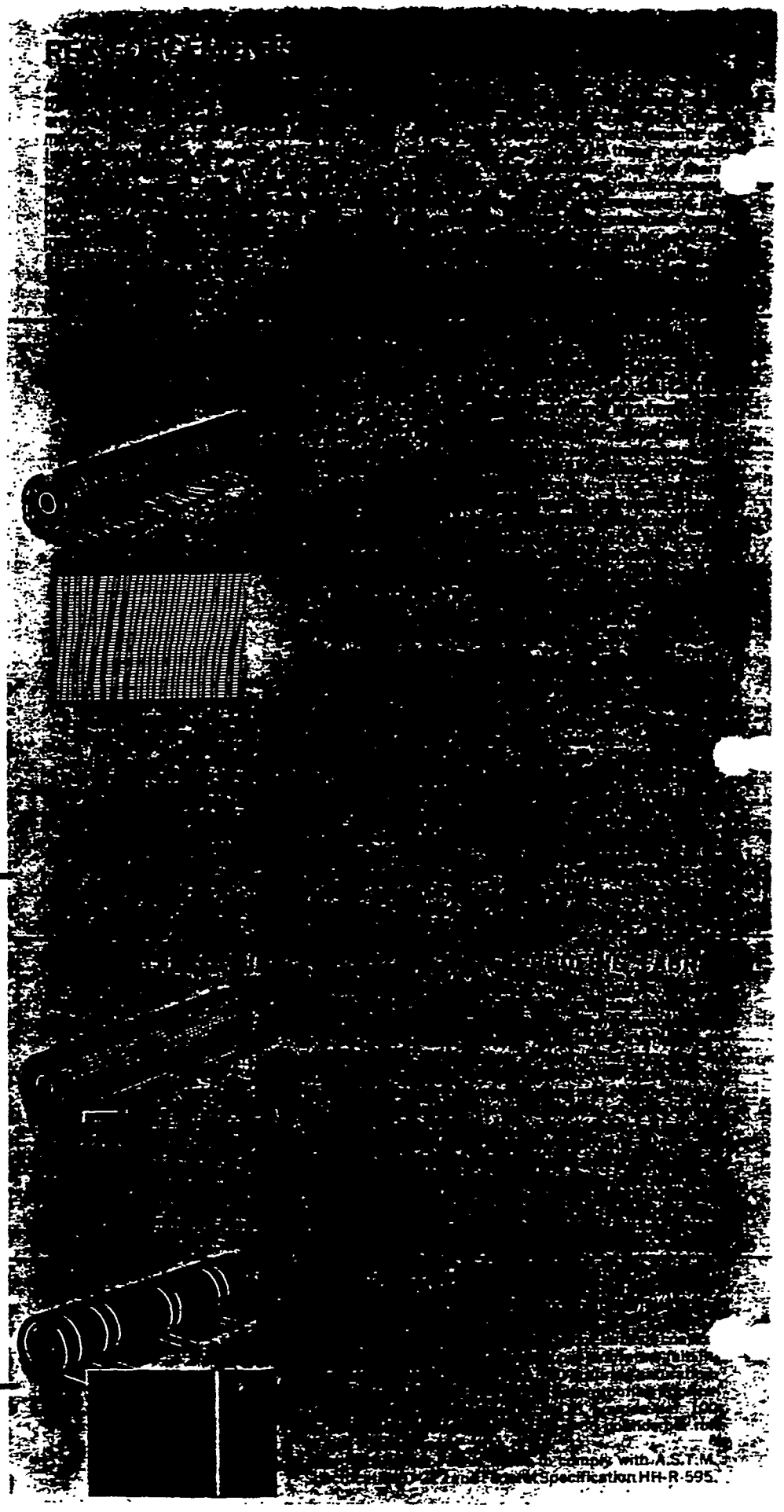
comply with A.S.T.M.
Specification HH-R-595.

DETAILS

PROTECTION COURSE

A newly applied waterproofing membrane must be protected against rupture and puncture during backfilling or construction. In all cases, backfilling should be done as soon as possible to further protect the membrane.

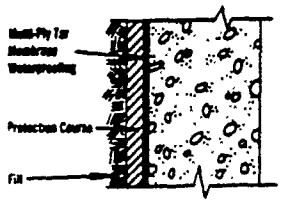

Fiberglas® board, ½" thick minimum, with glass reinforced bitumen surfacing, serves as an excellent, lightweight inorganic protection course for normal applications.

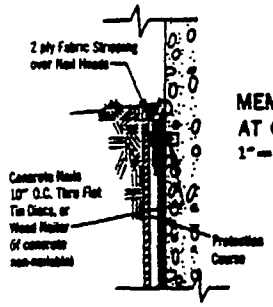

MEMBRANE AT GRADE
1"=1'-0"

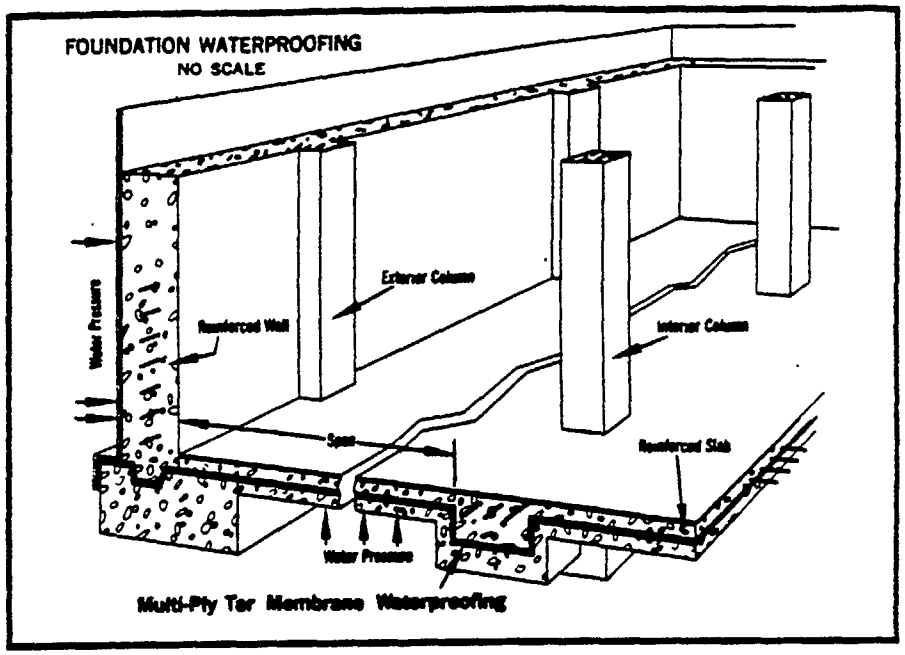

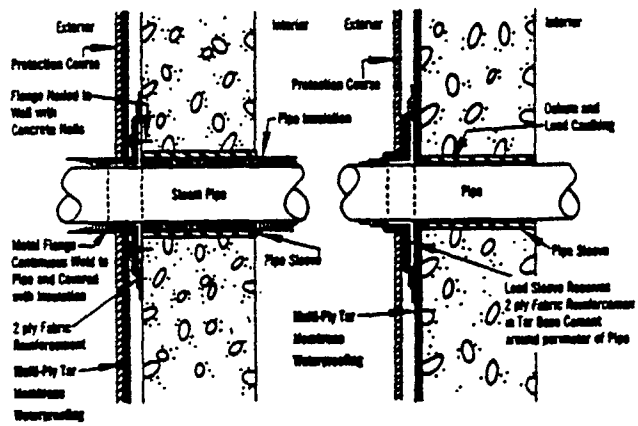

INSULATED STEAM PIPE DETAIL
Thru Foundation Wall
1"=1'-0"

PIPE DETAIL
Thru Foundation Wall
1"=1'-0"

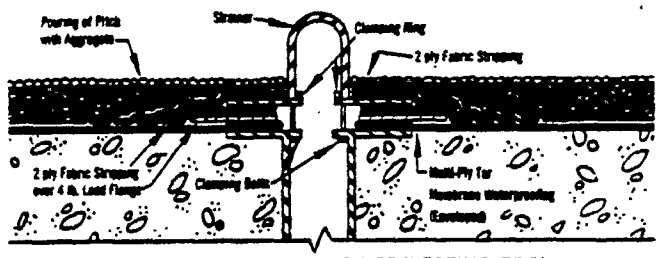

DRAIN OR SUMP DETAIL FOR REFLECTING POOL
1"=1'-0"

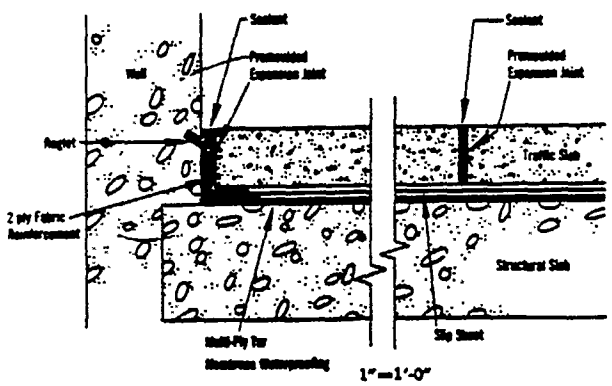

1"=1'-0"

WATERPROOFING BETWEEN SLABS

(When Bituminous Paving is used no expansion joint is necessary)

In waterproofing applications between slabs where a possibility of movement exists introduce a slip sheet or anti-bonding element on the top surface of the waterproofing membrane. This permits the top or exposed slab to move without damaging the membrane beneath it. A tough building paper impervious to bituminous material, heavy polyethylene sheet, heavy coated roofing felt, rigid non-absorbent insulation, a minimum ½ inch sand bed or a combination of such materials are some of the materials which make suitable slip sheets or anti-bonding elements.

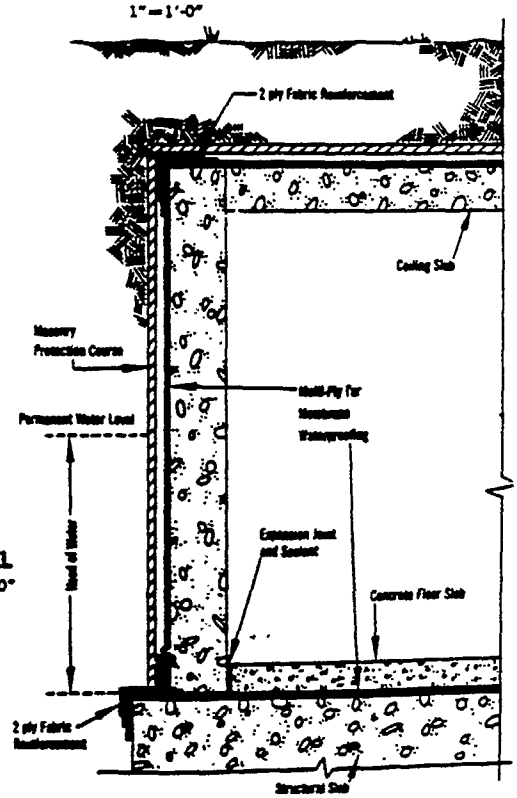

TUNNEL
½"=1'-0"

specifications MEMBRANE WATERPROOFING

MEMBRANE WATERPROOFING (CSI DIVISION 7)

1. SCOPE

All membrane waterproofing for concrete slabs — vertical and horizontal — where noted on drawings shall be _____ ply membrane waterproofing consisting of _____

2. GENERAL REQUIREMENTS

a. Preparation of surfaces: Surfaces to be waterproofed shall be reasonably smooth and free from holes or projections which might cause puncture of the membrane. The surface shall be dry and thoroughly cleaned to remove dust and loose materials immediately before application of the waterproofing. Do not apply waterproofing where effects of freezing or moisture will adversely affect the waterproofing application.

b. Applicator: All membrane waterproofing shall be applied by an experienced roofing and waterproofing contractor.

3. APPLICATION PRECAUTIONS

a. Pitch shall not be heated above 375°F.

b. Roll or press firmly all plies of membrane into the hot pitch and apply without wrinkles, buckles or kinks.

c. On vertical walls apply pitch with cotton roller mops or by other suitable application techniques.

d. Lay membranes on vertical surfaces of deep waterproofing surfaces in courses not exceeding ten feet in length where immediate and careful backfilling is not possible. After each course of waterproofing system is completed and before the top mopping is applied, nail each course at the upper edge before the next course is applied. Nail each succeeding course endlapping not less than 10 inches.

e. Reinforce wall angles, corners or any place the waterproofing membrane course may be subject to unusual stresses with not less than 2 additional plies of fabric or GLASFAB reinforcement and moppings of pitch.

f. Insulate and protect all hot water and steam pipes which project through or are near the surfaces to be waterproofed. Take the necessary precautions to prevent water from getting between the waterproofing and the waterproofed surface at all points where the membrane is penetrated by drains, pipes, etc. Apply extra plies of reinforcing membrane and pitch moppings in these areas.

g. Carefully examine laps which have been exposed for any length of time, such as at the junction of a vertical wall and a slab, for defects and insufficient lap areas and repair as necessary before proceeding with further application.

h. Apply all membrane waterproofing systems in a workmanlike manner and use wood nailers treated with a water-borne preservative for all vertical wall waterproofing.

i. Protect the membrane from damage by other trades after installation to maintain the integrity of the waterproofing throughout the structure.

j. Ventilation should be provided in enclosed spaces during application.

4. MATERIALS

a. Coal Tar Waterproofing Pitch — A.S.T.M. D-450 Type B

b. Membrane (Select one or combination)
GLASFAB — A.S.T.M. D-1668
Tar Saturated Cotton Fabric — A.S.T.M. D-173
Approved Tarred Felt — A.S.T.M. D-227

c. Concrete Priming Oil — A.S.T.M. D-43-41

5. APPLICATION

a. Horizontal concrete slab: (1) Beginning at the low point of the slab mop the surface with hot Koppers Waterproofing Pitch and immediately apply the reinforcing membrane over the entire area. (2) Be sure that each ply is solidly mopped and bonded. (3) For the various waterproofing systems lap the reinforcing plies as follows: (a) Two Ply System — lap 19 inches. (b) Three Ply System — lap 24⅔ inches. (c) Four Ply System — lap 27½ inches. (d) Five Ply System — lap 29 inches. (4) Mop the entire top surface with Koppers Waterproofing Pitch. The completed waterproofing forms a firmly bonded system and the reinforcement shall not be exposed at any place. (5) As soon as any portion of the waterproofing has been completed, cover it with the protection course specified, such as brick, tile, concrete rigid insulation or other specified material.

b. Plaza waterproofing: When membrane waterproofing is used in plaza construction with interior drains and finish slab does not rest immediately on the waterproofing, but on concrete pedestals, in addition to the application precautions above the following additional precautions shall be taken: (1) If deck is sloped to interior drains, specify waterproofing pitch conforming to ASTM Specification D-450 Type A. (2) Before the pouring or placing of pedestals supporting precast finish slabs, additional reinforcement shall be installed under each pedestal over existing membrane. (3) Extreme care should be taken to protect the finished waterproofing from damage by other trades during construction of towers, etc. Place a protective course over the finished membrane until the wearing surface is placed. (4) On precast concrete systems all joints should be grouted with flashing cement and stripped.

c. Vertical wall: (1) Over the entire surface to be waterproofed, apply a uniform brush coat of Koppers Concrete Priming Oil, approximately 1 gallon for each 100 square feet. (2) Mop wall completely with Koppers Waterproofing Pitch. (3) Starting at the most practical place, install the desired number of plies lapping them as follows: (a) Four Ply — lap 21½ inches. (b) Three Ply — lap 24⅔ inches. (c) Two Ply — lap 19 inches. (d) When more than 4 plies are used in a membrane, it is recommended that they be installed in at least two operations, i.e., 2 plies over three, 3 plies over three, etc. maintaining the shingle fashion method in each operation. (4) Nail membrane with concrete nails 8 inches on centers through flat tin discs at the end lap and horizontally across the membrane. If wood nailers are installed, nail membrane to nailer with 1½ inch roofing nails through flat tin discs 8 inches on centers. (5) Mop the entire surface with Koppers Waterproofing Pitch. The completed waterproofing forms a firmly bonded system and the reinforcement shall not be exposed at any place. (6) As soon as any portion of the waterproofing has been completed, cover it with the protection course and backfill.

Plies of Membrane Recommended for Different Water Pressures

Based on application to solid wall or floor

Head of water in Feet		
1-3	2	3
4-10	3	4
11-25	4	5
26-50	5	6
51-100	6	7

Material Quantities (for estimating purposes)

2	3	90
3	4	120
4	5	150
5	6	180
6	7	210

specifications DAMPPROOFING—SUB-GRADE

Three systems are recommended for subgrade dampproofing of masonry surfaces: Pitch Dampproofing (hot applied method), Koppers Foundation Coating (cold applied method), and Bitumastic Super Service Black (cold applied method).

The dampproofing specifications which follow are designed to prevent the penetration of moisture or dampness through a masonry surface. They are not designed to withstand hydrostatic pressures.

Written in the accepted CSI (Construction Specifications Institute) form for the convenience of the Specifier, these specifications apply to surface above grade as well as below. Materials and methods suggested are designed to keep walls dry. Depending on conditions, dampproof coating applications may be made on either exterior or interior surfaces of reinforced concrete. These treatments also give protection to the reinforcing steel.

Application is of extreme importance and the selection of a reliable contractor is essential for an effective job. Dampproofing will not withstand cracks or other structural failures due to ground movement, settlement or other causes even if it is expertly installed.

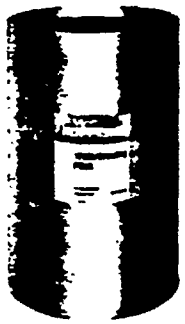

DAMPPROOFING SUB-GRADE, HOT PITCH METHOD* (CSI DIVISION 7)

Pitch dampproofing because of the inertness of coal tar pitch, has proved to be highly desirable and is recommended for most dampproofing applications. Where hot applications are not practical, alternative cold applied methods as mentioned above can be used.

1. SCOPE

Foundations, bridge abutments, basements, retaining walls, culverts, reservoirs, dams, sumps, pits, vats, tanks, as noted on drawings, shall be dampproofed by the hot pitch application method using _____ coats.

2. GENERAL REQUIREMENTS

a. Preparation of surfaces: All cracks, holes and voids and open areas in a concrete surface caused by segregation of coarse aggregate shall be thoroughly wetted with water and then carefully filled with Portland Cement Mortar, struck flush and permitted to dry. Before applying dampproofing, the masonry surface shall be free of dirt, grease, excess mortar or other foreign matter that might interfere with adhesion and penetration of the coating.

3. MATERIALS

a. Coal Tar Waterproofing Pitch — A.S.T.M. D-450 Type B
b. GLASFAB — A.S.T.M. D-1668
c. Concrete Priming Oil — A.S.T.M. D-43-41

4. APPLICATION

(a) Over the entire surface to be dampproofed, apply a uniform brush coat of Koppers Concrete Priming Oil and allow to penetrate. Approximately 1 gallon shall be used for each 100 square feet. (b) Apply a mopping of Koppers Waterproofing Pitch. Approximately 25 pounds per 100 square feet shall be used and the pitch shall be melted and heated to a temperature not in excess of 375°F. (c) A second mopping of waterproofing pitch shall then be applied over the entire surface of the first mopping. Approximately 25 pounds per 100 square feet shall be used so that the entire amount of pitch applied shall amount to a total of approximately 50 pounds per 100 square feet. (d) Reinforce all corners, cracks and joints with a strip of GLASFAB or Tar Saturated Waterproofing Fabric, extending 9 inches on both sides, mopped in place. (e) Fabric reinforcing with its pitch moppings shall be in addition to the 2 moppings of pitch. (f) The permanent backfill shall be tamped into place as soon as the last mopping has cooled.

*preferred method



DAMPPROOFING SUB-GRADE, KOPPERS FOUNDATION COATING (COLD) METHOD (CSI DIVISION 7)

For the prevention of dampness on interior masonry or concrete surfaces below grade, the use of Koppers Foundation Coating, a heavy body coal tar coating, is very effective. Its coal tar base offers protection against moisture and the acids and alkalies found in soil and cinder fill. It can be applied by brush or with regular spray equipment. It penetrates into and bonds tightly to properly prepared masonry surfaces.

1. SCOPE

Foundations, bridge abutments, basements, retaining walls, culverts, reservoirs, dams, sumps, pits, vats, tanks as noted on drawings, shall be dampproofed by the Koppers cold method using _____ coats.

2. GENERAL REQUIREMENTS

a. Preparation of surfaces: All cracks, holes and voids and open areas in a concrete surface caused by segregation of coarse aggregate shall be thoroughly wetted with water and then carefully filled with Portland Cement Mortar, struck flush and permitted to dry. Before applying dampproofing, the masonry surface shall be free of dirt, grease, excess mortar or other foreign matter that might interfere with adhesion and penetration of the coating.

3. MATERIALS

a. Koppers Foundation Coating

4. APPLICATION

(a) Cover completely the exterior surfaces and footings of foundation walls, retaining walls and bridge abutments with 2 coats of Koppers Foundation Coating applied either by brush or by spray. The application rate is 80-150 square feet per gallon depending upon the porosity of the concrete surface coated. (b) Apply the coating evenly from the footings to the soil or grade level so that all surfaces present a uniform black appearance. Brush or spray the second coat at right angles to the first coat to assure thorough coverage of the entire surface with a continuous impervious film. (c) Drying time between the first and second coats is 24 hours. Back-filling shall not be done before 1 day after the final coat is applied and shall be completed within 6 days.

WATERPROOFING & DAMPPROOFING SPECIFICATIONS MANUAL

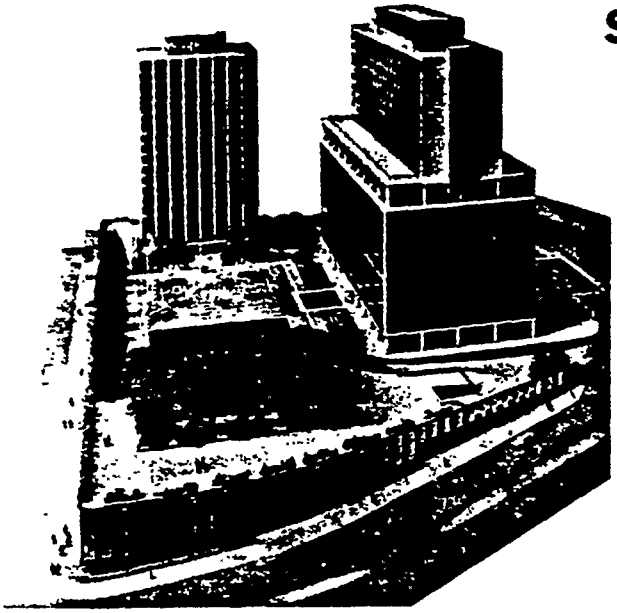

Chatham Center, Pittsburgh, Pa., a new 5½-acre complex of buildings includes a 19 story apartment tower, an eleven-floor motor lodge atop a nine-floor office building, a 660-seat motion picture theater, a service station, a bank, banquet and convention facilities, restaurant, cocktail lounge, shops, professional offices and a landscaped 4½-acre plaza sitting above a 2,200-car underground garage.

The entire complex is waterproofed with coal tar pitch from Koppers. The plaza, with its fountains and a grove of trees over the 6-story underground garage is protected by a 5-ply coal tar pitch waterproof membrane. The same waterproofing system was used for each garage floor and the swimming pool and health club in the hotel-office building.

Architect William Lescaze Associates, New York and Associate Architect, Harry H. Lefkowitz, Pittsburgh, specified 2,800 squares of Koppers waterproofing to protect the components of this complex.

KOPPERS Catalogs In Sweets	Architectural	Industrial Construction	Plant Engineering
Wood Preserving	2d / Ko		9a / Kop
Fire Retardant Shakes and Shingles	21e / Ko		
Laminated Wood Design Manual	1c / Ko	1c / Ko	
Sinclair Koppers Insulation	8b / Sin	8b / Sin	
Built-Up Roofing	21a / Ko		
Waterproofing	7 / Ko		
Seamless Flooring	11f / Ko	10e / Ko	
Coatings		9b / Ko	8c / Kop

KOPPERS

Architectural and Construction Materials

Pittsburgh, Pennsylvania 15219

FOR ENGINEERING ASSISTANCE...**Since the majority of projects present such a wide variety of conditions, the specifier must take precautions in the preparation of waterproofing specifications and related details to maximize the possibilities of a permanently watertight job.**

Koppers has had many years experience in the waterproofing field and offers the specifier engineering assistance in achieving the best possible waterproofing job. Contact the nearest office listed below.

***Birmingham, Alabama 35189**
(Woodward)
Tel: 205-744-9110

Charlotte, North Carolina 28203
1409 East Boulevard
P.O. Box 3186
Tel: 704-375-4427

***Chicago, Illinois 60603**
122 South Michigan Avenue
Tel: 312-939-2400

Cleveland, Ohio 44124
5010 Mayfield Road
Tel: 216-291-1000

Detroit, Michigan 48075
(Southfield)
24800 Northwestern Highway
Tel: 313-352-3920

Houston, Texas 77022
4101 N. Freeway
P.O. Box 16220
Tel: 713-697-2051

Kansas City, Missouri 64111
Room 5 V.F.W. Building
Tel: 816-531-6680

***Los Angeles, California 90005**
3440 Wilshire Boulevard
Tel: 213-383-4111

***New York, New York 10022**
430 Park Avenue
Tel: 212-755-2810

***Pittsburgh, Pennsylvania 15219**
612 Chatham Center
Tel: 412-391-3300

San Francisco, California 94010
(Burlingame)
1801 Murchison Drive
Tel: 415-692-3330

St. Louis, Missouri 63101
706 Chestnut Street
Tel: 314-241-8096

St. Paul, Minnesota 55115
1000 Hamline Avenue
Tel: 612-646-7801

Tulsa, Oklahoma 74103
317 Thompson Building
Tel: 918-583-2233

Washington, D.C. 20006
1725 K Street N.W.
Tel: 202-333-8282

*District Offices

OM 310-109

PRINTED IN U S A.

deck construction:

2.8 Wood Fiber

SLOPE • Up to 1 in. per ft.
SURFACE • Aggregate

Spec. No. 27 – 4 ply
Spec. No. 28 – 3 ply

Spec. No. 27 wi – 4 ply
Spec. No. 28 wi – 3 ply
board type insulation

Spec. No. 27 wiv – 4 ply
Spec. No. 28 wiv – 3 ply
board type insulation and vapor barrier

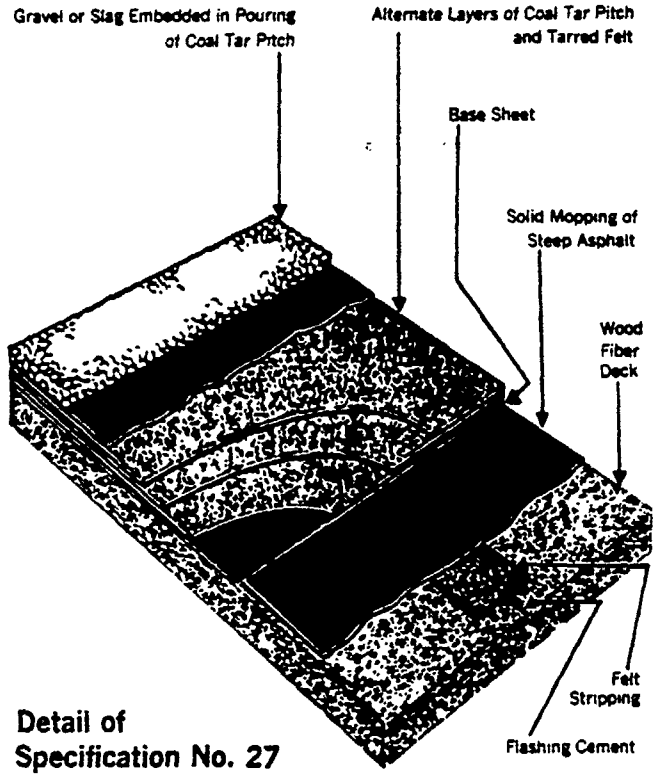

Detail of Specification No. 27

All decking must be installed in strict accordance with the particular deck manufacturer's recommendations for installation. Deck material must be protected during shipment, job site storage and prior to roofing application. No planks which have become structurally weakened due to moisture, fractures or mutilated edges may be used. All joints must be level and preferably grouted full and level with plank surfaces as recommended by the deck manufacturer. All planks must be well anchored to supporting members to resist movement in a fashion recommended by the deck manufacturer. Any planks which bow or deflect or do not seat securely must be replaced. Responsibility for the selection of a particular type of wood fiber deck, its installation, provision for expansion and contraction, its suitability to job requirements, and its ability to support anticipated loads in its environment rests with the designer and deck manufacturer.

PROCEDURE

Select clauses as required. Optional clauses in italic.

Green copy denotes built-up roofing specification

Condition of Surface to Receive Roofing

Do not apply roofing to any deck which is not reasonably level or free from excessive voids or projections or where deck surface fibers are loose, spongy or separating. Deck must be clean of debris, cuttings, dirt and other foreign matter.

Do not apply roofing over deck planks where side or end joints are not butted level or where planks are not seated properly or where joints are excessively gapped.

It is recommended, whether joints are well grouted or not, that they be caulked and stripped. A sufficient quantity of trowel grade asphaltic plastic cement should be used to continuously seal all joints followed by a strip of No. 15 asphalt saturated felt approximately six (6) inches wide centered over the joints and adhered to the plastic cement.

Perimeter wood nailers must be installed and all adjacent decking must fit close and level. Wood nailers are necessary at all locations where anchoring of metal flanges etc., are required.

Application of Roofing Materials

1st. Install one ply of Koppers coated base sheet with minimum four (4) inch side and six (6) inch end laps in a solid mopping of minimum 190°F softening point steep roofing asphalt. All side and end laps shall be continuously sealed the full width of the lap.

ALTERNATE: *As an alternate to mopping, lay one (1) ply of rosin-sized sheathing paper lapped two (2) inches minimum and nail to hold in place. Then lay one (1) ply of Koppers coated base sheet lapped not less than four (4) inches and nail along center of lap not less than nine (9) inches on center and thru the center of each sheet on eighteen (18) inch centers with mechanical clinching type fasteners as recommended by the Structural Wood Fiber Products Association or designer such as Simplex Tube-Lok nails.*

For bonded roofing applications, fasteners, other than Tube-Lok nails, must be acceptable to Koppers. Fasteners shall be applied at the minimum rate of one (1) per square foot as recommended by the Structural Wood Fiber Products Association.

2nd. Solidly mop the entire surface with Old Style Pitch.

3rd. Spec. No. 27

Apply three (3) plies of Koppers Approved Tarred Felt, lapping plies twenty-four and two-thirds (24-2/3) inches.

3rd. Spec. No. 28

Apply two (2) plies of Koppers Approved Tarred Felt, lapping plies nineteen (19) inches.

Mop solidly between plies with Old Style Pitch so that in no place shall felt touch felt.

4th. Pour over the entire surface of the roofing membrane a uniform coating of Old Style Pitch into which, while hot, embed not less than four hundred (400) pounds of gravel or three hundred (300) pounds of slag for each one hundred (100) square feet.

Insulation and Vapor Barrier

1. Insulation without vapor barrier. Install insulation in steep asphalt in conformance with 1st paragraph. Nailable insulation not exceeding one (1) inch thick may be installed using 1¾ inch Simplex Tube-Lok nails at all four corners and at center of board. Installation of roofing over insulation shall be as per specification outlined above with base sheet mopped solidly to the insulation in steep asphalt.

2. Insulation with vapor barrier. Install two (2) plies of No. 15 asphalt felt lapped nineteen (19) inches in steep asphalt as per 1st paragraph of this specification. Both plies shall be mopped solidly so that in no place shall felt touch felt. Install insulation in solid mopping of steep asphalt. Roofing over insulation is to be in accordance with the details of the specification above with base sheet mopped solidly to the insulation.

Membrane below the insulation and insulation including methods of application are not part of built-up roofing. Suggestions described in this section are offered to assist the designer in establishing their normal position and to indicate requirements for a suitable base for the built-up roofing. See Section 2.3 Page 9.

General Requirements on pages 3 through 6 and Detailed Specifications on pages 20 through 26 are a part of this specification and must be adhered to where applicable.

deck construction:

21a
Ko

2.7 Poured Gypsum
(Precast Gypsum)
Lightweight Insulating Concrete

SLOPE • Up to 2 in. per ft.
SURFACE • Aggregate

Spec. No. 12–5 ply
Spec. No. 13–4 ply

Spec. No. 12 wi–4 ply
Spec. No. 13 wi–3 ply
board type insulation

Spec. No. 12 wiv–4 ply
Spec. No. 13 wiv–3 ply
board type insulation and vapor barrier

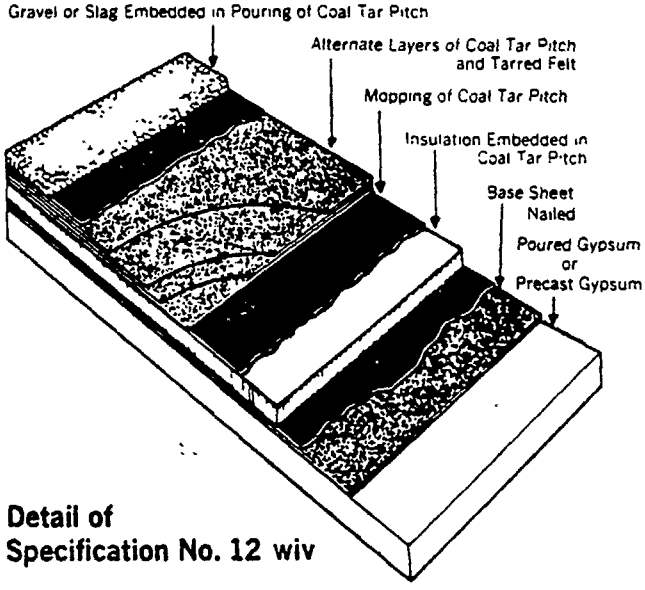

Detail of Specification No. 12 wiv

The same recommendations applying to precast concrete slabs apply to precast gypsum slabs and gypsum metal bound planks. All uneven slabs should be reset or leveled off so that the roof will be laid on a flat and even surface, free from projections and low areas. Because these slabs are precast, the possibility of a high moisture content being present is more remote than in the poured gypsum deck.

Poured gypsum decks sometimes cause trouble because the built-up roofing is laid before the deck is thoroughly dry—such as might happen when the general contractor is anxious to get the building under cover and so urges the roofing contractor to begin work shortly after the deck has been poured. When this happens the result is a blistered and buckled membrane or, just as serious, insulation curls and makes an unsatisfactory job. The roofing contractor, backed by the architect, should insist on a thoroughly dry deck before beginning work. He should also see to it that the deck is free of loose sand, frozen scale and other foreign matter. Projections should be removed, low points filled with cement grout or other suitable material, and all cracks pointed up.

deck construction:

2.10 Wood Plank/ Plywood

SLOPE • Up to 2 in. per ft.

SURFACE • Aggregate

For recommendations on wood and wood treatment, contact: Koppers Company Inc., Forest Products Division, Lumber Sales Dept., 750 Koppers Bldg., Pittsburgh, Pa. 15219

Spec. No. 1 – 5 ply
Spec. No. 2 – 4 ply

Spec. No. 1 wi – 4 ply
Spec. No. 2 wi – 3 ply
board type insulation

Spec. No. 1 wiv – 4 ply
Spec. No. 1 wiv – 3 ply
board type insulation and vapor barrier

Treated wood should be used where a vapor barrier is required, see Sec. 1.3.2

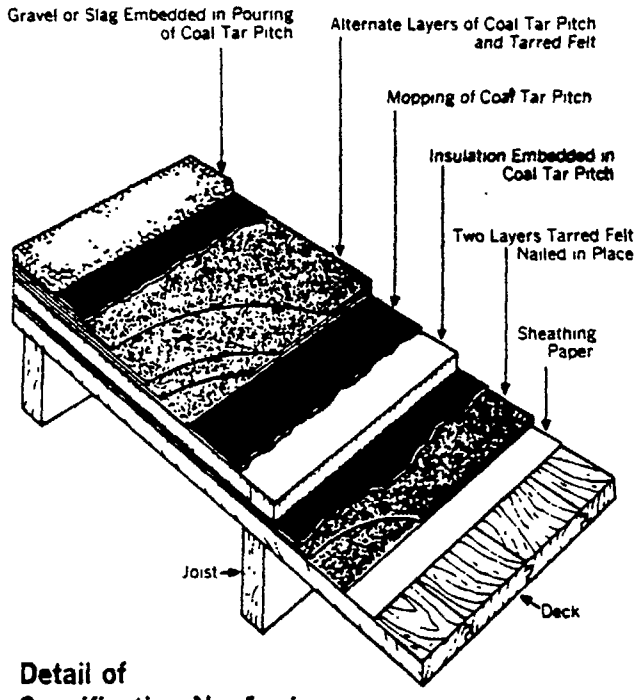

Detail of Specification No. 1 wiv

Hot bitumen should never be applied directly to a wood deck. Sandwiched between the heat from above and the heat from below, such material finds its way through the boards into the building. Good practice demands the cushioning and blotting effect of a layer of sheathing paper followed by layers of dry felt. Shiplap and square edge boards should be avoided where possible. If the underside of the roof deck is exposed to air pressure created from open doors or windows, tongue-and-grooved lumber should be used.

PROCEDURE

Select clauses as required. Optional clauses in italic.

Green copy denotes built-up roofing specification

Condition of Surface to Receive Roofing

Do not apply roofing to any surface which is not reasonably smooth and free from projections or holes which might cause rupture of roofing membrane. Lumber shall be seasoned and dry and preferably treated. Immediately before the application of the roofing, thoroughly clean the surface. Roof deck shall be properly graded to outlets.

Application of Membrane Below Insulation

1. The wood roof deck shall be covered with one (1) layer of approved rosin-sized sheathing paper weighing approximately five (5) pounds per one hundred (100) square feet. The sheathing paper shall be lapped two (2) inches and secured to the deck by occasional nailing.

2. Two full thicknesses of Tarred Felt shall be laid over the entire surface, lapping each sheet nineteen (19) inches over the preceding sheet and nailing the sheets in place.

If two ply vapor barrier is required lay over the entire surface two (2) full thicknesses of Koppers Approved Tarred Felt, lapping each sheet nineteen (19) inches over the preceding sheet—mopping with Old Style Pitch the full nineteen (19) inches so that in no place shall felt touch felt.

Application of Insulation

1. Mop the entire surface with a uniform coating of Old Style Pitch into which, while hot, firmly embed the insulation. When roofs have an incline of from two (2) inches to six (6) inches per foot, use Steep Roofing Asphalt.

For application of roofing materials over insulation follow procedure in Section 2.4 P. 10.

Application of Roofing Materials Directly on Wood

1st. Lay one ply of rosin sized or other approved sheathing paper weighing not less than five (5) lbs. per 100 square feet lapping each sheet two (2) inches and nail sufficiently to hold in place.

2nd. Spec. No. 1 • Spec. No. 2

Apply over the entire surface of the sheathing paper, two (2) dry plies of Koppers Approved Tarred Felt. Lap plies nineteen (19) inches. Nail on twelve inch centers, 2" in from edge lap with nails thru flat tin discs or approved nails with integral caps. Nail shanks are to be of required length for maximum withholding power.

3rd. Mop with Old Style Pitch the entire surface, preceding the application of additional plies of felt and apply over the entire surface as follows.

4th. Spec. No. 1

Apply three (3) plies of Koppers Approved Tarred Felt, lapping plies twenty-four and two-thirds (24-2/3) inches.

4th. Spec. No. 2

Apply two (2) plies of Koppers Approved Tarred Felt, lapping plies nineteen (19) inches.

Mop solidly between plies with Old Style Pitch so that in no place shall felt touch felt.

On slopes one (1) inch per foot or more nail each sheet of felt with Simplex flat head or one (1) inch barbed roofing nails through flat tin discs, two (2) inches from the back edge on twenty-four inch centers.

5th. Pour over the entire surface of the roofing membrane a uniform coating of Old Style Pitch into which, while hot, embed not less than four hundred (400) pounds of gravel or three hundred (300) pounds of slag for each one hundred (100) square feet.

Membrane below the insulation and insulation including methods of application are not part of built-up roofing. Suggestions described in this section are offered to assist the designer in establishing their normal position and to indicate requirements for a suitable base for the built-up roofing. See Section 2.3 Page 9.

General Requirements on pages 3 through 6 and Detailed Specifications on pages 20 through 28 are a part of this specification and must be adhered to where applicable.

surface:

2.9 Promenade Tile Surfacing

SLOPE • Up to 1 in. per ft.
Deck Construction • Poured Portland Cement Concrete

Spec. No. 20–5 ply

Spec. No. 20 wi–5 ply board type insulation

Spec. No. 20 wiv–5 ply board type insulation with vapor barrier

NOTE: The base sheet alternate Section 1.3.7 shall not be used.

PROCEDURE

Green copy denotes built-up roofing specification

Condition of Surface to Receive Waterproofing

Do not apply built-up membrane to any surface which is not smooth and free from projections and holes which might cause rupture of the membrane. Surfaces must be dry. Immediately before the application of the roofing, thoroughly clean the surface of dust and loose material. Roof deck shall be properly graded to outlets.

Application of Waterproofing Material

1st. Mop deck completely with Old Style Pitch.

2nd. Apply over the entire surface two (2) plies of Koppers Approved Tarred Felt, lapping each ply nineteen (19) inches. Mop Old Style Pitch solidly between each 19 inch lap so that in no place shall felt touch felt.

3rd. Mop the entire surface of the first two plies of felt preceding the application of additional plies with Old Style Pitch.

4th. Apply over the entire surface two (2) plies of Koppers Approved Tarred Felt, lapping plies nineteen (19) inches. Mop Old Style Pitch solidly between each 19 inch lap so that in no place shall felt touch felt.

5th. Before laying the tile, the membrane surface shall be thoroughly cleaned and the membrane mopped with Old Style Pitch into which, while hot, embed one (1) layer of tarred felt, lapping each sheet two (2) inches over the preceding sheet. Only part of the membrane surface shall be covered with the last ply of felt at one time, the tile then being laid over that portion at once.

6th. The vitrified clay tile should be set in not less than three-quarters (3/4) inch of Portland Cement Mortar (1 to 3 mix). The joints should be grouted full with Portland Cement Mortar (1 to 2 mix). The tile should be laid to show three-sixteenths (3/16) inch to one-fourth (1/4) inch joints. Expansion joints three-quarters (3/4) inch wide filled with plastic mixture, which must be approved by the architect, shall be provided between the tile and all flashings. Either metal or mastic expansion joints should be provided throughout the roof surface as may be necessary. Expansion joints should extend through to the roofing and should be spaced not more than twenty (20) feet apart in any direction. They should also be installed at all walls, skylights, curbs, etc.

Note

a. If insulation is required, use rigid type.
b. Tile should be applied just as soon as possible after application of membrane. During freezing weather, exposed felt surfaces shall be glazed with a mopping of pitch.
c. Koppers Company, Inc., will not be responsible or liable for leaks due to the installation, contraction or expansion of Promenade Tile and will not be responsible for the taking up and replacing of tile in order to locate leaks through the waterproofing.

Insulation and Vapor Barrier

1. Insulation without vapor barrier—See Section 2.5 P.11
2. Insulation with vapor barrier—See Section 2.5 P.11

Roofing to be laid over insulation as described on this page

Membrane below the insulation and insulation including methods of application are not part of built-up roofing. Suggestions described in this section are offered to assist the designer in establishing their normal position and to indicate requirements for a suitable base for the built-up roofing. See Section 2.3 Page 9.

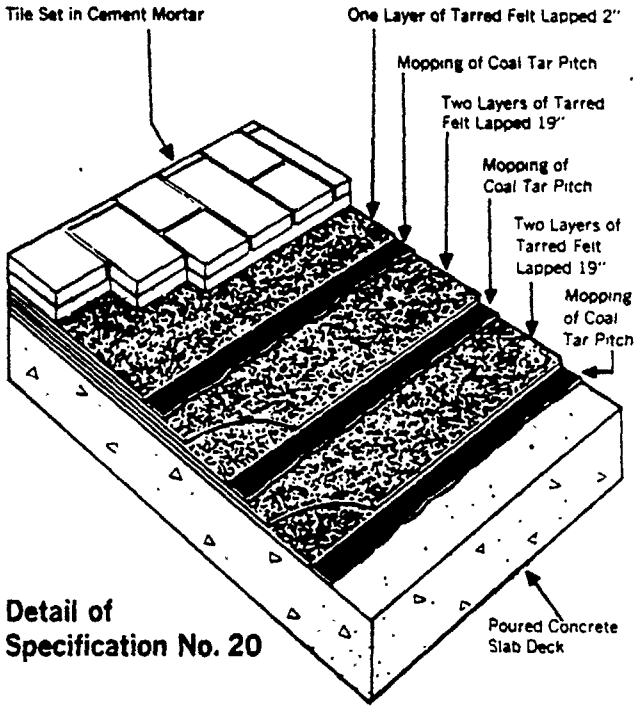

Detail of Specification No. 20

Although it is practical to set promenade tiles in bitumen or mastic, it is not recommended if tile is to be exposed to long periods of sunlight since heat will cause the material to come up through the joints to the surface. This is not only expensive but difficult to remedy. In order to insure against damage due to expansion and contraction, expansion joints should be provided for all surfaces exceeding 400 square feet.

After tile has been laid all traffic should be barred for at least 24 hours, after which the tile should be thoroughly scoured and flushed with water.

When any other traffic surfacing materials are applied over roofing, the roofing is considered waterproofing.

Note

Consult Koppers manual on Waterproofing and Dampproofing for other membrane systems where waterproofing is required beneath other types of wearing surfaces.

Consult Koppers representative for suggested flashing details.

General Requirements on pages 3 through 6 and Detailed Specifications on pages 20 through 26 are a part of this specification and must be adhered to where applicable.

5.1 Steep Roofs

SLOPE • 2 in. minimum—3 in. maximum
SURFACE • Aggregate

deck construction:

Spec. No. 300A—5 ply
See paragraphs A-1, B-1, C-1 & D

Spec. No. 2500A—4 ply
See paragraphs A-1, B-1, C-2 & D

WOOD, PRECAST or POURED GYPSUM DECKS

Spec. No. 800A—4 ply
See paragraphs A-2, B-2, C-3 & D

Spec. No. 3200A—3 ply
See paragraphs A-2, B-2, C-4 & D

PRECAST or POURED CONCRETE and METAL DECKS

PROCEDURE

Condition of Surface to Receive Roofing

FOR WOOD DECKS: Same as described under Spec. No. 1.

FOR POURED AND PRECAST GYPSUM: Same as described under Spec. No. 12.

FOR POURED AND PRECAST CONCRETE: Same as described under Spec. No. 5 and Spec. No. 10 respectively except that on decks not permitting nailing, treated nailing strips should be spaced not more than twenty-four (24) inches apart.

FOR METAL DECKS: Same as described under Spec. No. 17 (For application of insulation see Spec. No. 17). The insulation must be a type that can retain nails and must be fastened securely to the deck by means of approved mechanical fasteners which shall be placed at each corner and at the center of each sheet of insulation. When more than one layer of insulation is applied fasteners shall be driven after top layer of insulation is applied.

Application of Roofing Materials

1st **A-1** **(Spec. No. 300A and Spec. No. 2500A)** Over the entire surface lay two (2) plies of Koppers No. 15 Asphalt Felt. Lap each sheet nineteen (19) inches over preceding sheet. Nail in place.

A-2 **(Spec. No. 800A and Spec. No. 3200A)** Over Poured Concrete: Coat entire surface with Koppers Asphalt Primer. Over Precast Concrete: Hold asphalt primer back two (2) inches from all slab joints.

2nd **B-1** **(Spec. No. 300A and Spec. No. 2500A)** Mop entire surface with Koppers Steep Asphalt into which, while hot, shall be applied the felts.

B-2 **(Spec. No. 800A and Spec. No. 3200A)** Over Poured Concrete: Mop deck completely with Koppers Steep Asphalt. Over Precast Concrete: Mop deck with Koppers Steep Asphalt holding back two (2) inches from all joints. Over Metal Decks: Mop insulation completely with Koppers Steep Asphalt.

3rd **C-1** **(Spec. No. 300A)** Over the entire surface lay three (3) plies of Koppers No. 15 Asphalt Felt, lapping each sheet twenty-four and two-thirds (24-2/3) inches over the preceding sheet. Mop the full width under each ply with Koppers Steep Asphalt and nail through flat tin discs two (2) inches from the upper edge on nine (9) inch centers.

C-2 **(Spec. No. 2500A)** Over the entire surface lay two (2) plies of Koppers No. 15 Asphalt Felt, lapping each sheet nineteen (19) inches over the preceding sheet. Mop the full width under each ply with Koppers Steep Asphalt and nail through flat tin discs two (2) inches from the upper edge on nine (9) inch centers.

C-3 **(Spec. No. 800A)** Over the entire surface lay four (4) plies of Koppers No. 15 Asphalt Felt, lapping each sheet twenty-seven and one-half (27½) inches over the preceding sheet. Mop the full width solid under each sheet with Koppers Steep Asphalt and nail through flat tin discs on nine (9) inch centers. On precast concrete decks the first mopping is to be held back two (2) inches from all joints.

C-4 **(Spec. No. 3200A)** Over the entire surface lay three (3) plies of Koppers No. 15 Asphalt Felt, lapping each sheet twenty-four and two-thirds (24-2/3) inches over the preceding sheet. Mop the full width solid under each sheet with Koppers Steep Asphalt and nail through flat tin discs on nine (9) inch center. On precast concrete decks the first mopping is to be held back two (2) inches from all joints.

4th **D** Over the entire surface apply a uniform coating of Koppers Steep Asphalt into which, while hot, embed not less than 400 lbs. gravel or 300 lbs. of slag for each one hundred (100) square feet.

General

At junction of steep and flat roofing, the roofing on the flat surface shall be carried up the inclined surface not less than twenty-four (24) inches before the steep roofing is applied. Application of steep roofing shall start at the point of junction with the flat roof.

Membrane below the insulation and insulation including methods of application are not part of built-up roofing. Suggestions described in this section are offered to assist the designer in establishing their normal position and to indicate requirements for a suitable base for the built-up roofing. See Section 2.3 Page 9.

General Requirements on pages 3 through 6 and Detailed Specifications on pages 20 through 26 are a part of this specification and must be adhered to where applicable.

3. Re-Roofing Specifications

Due to varying conditions of the roof deck and surface of the old roofing, it will be necessary for a representative of Koppers Company, Inc., to approve the type of specifications for re-roofing if a Koppers Roofing Bond is to be issued. No bond will be issued without prior approval from Koppers.

Moisture trapped within an old roofing system will seriously and quickly affect a new membrane.

No bond will be issued over any old insulated roof regardless of condition unless old roofing and insulation are removed to the deck prior to application of new roofing materials. No exception to this requirement will be permitted unless explicit permission is obtained from the Technical Department of Koppers Company, Inc., Organic Materials Division.

In general, we recommend the following practice and specifications for re-roofing work.

NOTE: Koppers Company, Inc., Guarantee Bond does not cover roof insulation or failure of roof deck. The application of a Koppers Bonded Roof over an old roof shall not constitute a waiver of these conditions.

1. Original deck must be checked to determine that it is structurally sound, smooth and in a condition to perform satisfactorily for the term expected of the new roofing membrane.

If it is not, provisions must first be made to accomplish this vital requirement.

2. All wood nailers, metal flashings, drains and flanges, sign supports, flag poles, etc., must be checked to determine their structural soundness and anchorage, again, to insure they will perform for the term expected of the new roofing membrane. If unsatisfactory or questionable, they must be replaced.

3. Assuming there is no insulation involved, the existing roofing membrane must be checked thoroughly.

a. If it has disintegrated to the extent that it has little value or that its adherence to the deck is questionable (possible blow-off or uplift damage), then all of the old roofing membrane must be removed.

b. If items one (1) and two (2) above are considered satisfactory, and the existing membrane can be made smooth and clean, it will not be necessary to remove the existing membrane.

c. On old roofing, repair all buckles and blisters by cutting, open, remopping, and applying 2 plies of felt before new roofing is installed according to re-roofing specifications. Before the application of new roofing, the surface of old roofing shall be made smooth and clean. In places where surface is slightly rough, apply a flood coat of Coal Tar Pitch (for pitch roofs). Asphalt (for asphalt roofs) may be applied to level the surface. When such procedure does not provide a suitable base for new roofing, install insulation in steep asphalt, over asphalt roofs or pitch, over pitch roofs.

APPLICATION OF NEW ROOFING

Over Tarred Felt and Pitch Roofing

New roofing shall be applied according to Koppers Specifications for over poured concrete decks with the exception that on wood decks, 2 plies of dry felt shall be applied at all places where there is a possibility of pitch seepage through the deck before the application of new built-up roofing.

Over Asphalt Roofing on Decks Where Nailing Is Possible

Roofing shall be applied according to Koppers wood deck specifications with the exception that the approved rosin-sized paper may be eliminated. If insulation is installed, apply roofing according to Koppers Specifications for over poured concrete decks, setting insulation in asphalt.

Over Asphalt Roofing on Decks Where Nailing Is Not Possible

Roofing shall be applied according to Koppers concrete deck specifications with the exception that each bottom sheet of felt shall be strip mopped to the old roofing, and these strip moppings shall be not less than 6 inches apart. If new insulation is applied, set in mopping of asphalt to old roofing.

Application of New Flashing

All old built-up flashing must be removed and new built-up composition flashing installed according to Koppers Specifications.

4. KOPPERS Bonded Roofing Program

Bonds for Koppers Roofing and Flashings are available for the listed specifications in this manual. Roofing and flashing must be constructed in accordance with Koppers specifications, Koppers materials and by a roofing contractor approved by Koppers in writing. Any deviations from specifications or requirements of bond procedure must be approved by Koppers.

Koppers bonds are available for 10, 15 or 20 year terms. A twenty-five (25) year bond is available for all 20-year type Coal Tar Pitch roofing specifications when it is so included in written specifications. Bonds only cover built-up roofing and flashings where approved.

Koppers will issue its standard roofing bond for coal tar pitch flat or low-sloped roofing and will include such Koppers steep asphalt roofing as required in conjunction with the flat or low-sloped roofing, provided the steep roofing does not exceed 50% of the total roofing to be bonded. All roofing to be bonded must be constructed in conformance with Koppers specifications.

Koppers bonds are not available for residential roofing.

Koppers bonds are transferable upon timely written notification of a change in property ownership.

Koppers bonded roofing program provides for use of proven specifications, quality materials and that the roofing will be applied by a qualified Koppers Approved Roofing Contractor. It also provides for discussion of specifications during the planning stage, consultation during construction and assistance to the owner throughout the bond term as may be necessary in relation to leaks, additional items to project through or be placed above the roof or any matter related to the performance of the roofing. It further provides for necessary repairs of leaks during the term of the bond to the roofing or flashing membrane (when flashing is endorsed) up to the monetary limit specified in the bond.

Koppers bonds do not cover repair, installation or replacement costs of decking materials, vapor barrier materials, insulation products, metal work or products in the roofing assembly furnished by others, nor will Koppers assume responsibility for any damage to the bonded roofing or flashing caused by or the result of the use of these products, their installation or attachment. Bonds are not effective in cases of vandalism or owner abuse.

Koppers bonds are available within the continental limits of the United States in all cases except those areas where Koppers does not presently provide inspection service.

Flashing endorsements when required for bonded roofing may be for terms up to but not exceeding the term for which the roofing is bonded.

Charges for roofing bonds are made on a per square (100 square feet) basis of the roofing membrane. If a flashing endorsement to the bond is required, the area of flashing is included for computing the total bond charge. Information on bond charge fees and minimum charges with relation to monetary coverage limits and terms are available through Koppers Approved Roofing Contractors, Koppers District Offices and local Koppers Roofing Representatives. Bond charge payment is due at the time the bond is issued and no additional charge is necessary during the term of the bond.

Koppers reserves the right to cancel a bond if the roof is damaged due to causes not covered by the bond if it is determined that its satisfactory performance for the remaining term of the bond is impaired. Cancellation due to damage of this type does not provide for any refund of the original charge.

6. Koppers Flashing Specifications

Specification Number	Applicable Notes	General	Bondable Classification	Brief Description
6.3 **110**	1, 2, 3, 4	Metal Cap Asbestos Base Tar Coated Surface	20 year or 15 year Type	Concrete priming oil (coal-tar) 2 plies No. 15 tarred felt 2 plies No. 15 tarred asbestos felt *All plies set in tar base cement* Top nailed every 10" o.c. maximum Heavy top coat of tar base cement Metal cap and pointing
6.2 **108**	3, 4, 5.	Metal Cap Reinforced Asbestos Base Asphalt Coated Surface	20 year Type	Asphalt primer 1 ply No. 15 asphalt asbestos felt 1 ply reinforced asphalt asbestos felt Both plies set in flashing cement Top nailed every 8" o.c. max. plus all end laps at top and into cant above cant mid-point. Strip all end joints Heavy top coat of flashing cement or Chembond Metal cap and pointing

NOTES:

1. This specification *must* be used in conjunction with Koppers water cooled roofs.
2. This specification is recommended for use with any coal tar pitch roof specification where ponded or standing water will lay in contact with the flashing.
3. All End laps of plies of flashing systems must be staggered or broken with underlying plies.
4. Nailing strips must be provided where necessary to assure maximum holding power.
5. One (1) ply of No. 15 asphalt felt may be used for the one ply underlayment in lieu of the No. 15 asphalt asbestos felt when required.

6.1 General

Flashings are the terminal closures of a roofing system which perform a waterproofing, and in some systems a decorative function. Flashings must be installed at all intersections formed by vertical surfaces. Their importance cannot be stressed too strongly. Water entering the roofing system through flashings can result in water vapor forces which will destroy the effectiveness of the roofing.

Koopers' flashings are an integral part of a Koppers' roof. Designed for flexibility so that slight movements do not dislodge them and fastened securely to the wall, they give many years of service.

It is particularly important that the top edge of the flashing be protected by counter flashing, which will insure a diversion of the water away from any opening which might develop between flashing and wall. In any case where the design or anchoring system of metal counter flashing is difficult, the top of the flashing system should be double stripped with Koppers Glasfab 4" wide set in Koppers' tar base cement for Specification 110 or Koppers' flashing cement in Specification 108.

Metal work is only useful decorative, water shedding, or protection against mechanical damage, and is not a waterproofing part of the flashing system. Because of the high coefficient of expansion of sheet metals and the large temperature changes experienced on a roof, sheet metal or exposed metal components must be isolated from the waterproofing components

6.2 Specification No. 108

(reinforced asbestos)

Recommended where sunlight is the predominant exposure. Should be used for all high flashing.

METAL CAP
ASBESTOS BASE (1+1)
COATED SURFACE

Application

Extend plies of roofing felts and pitch moppings up all walls, parapets and curbs for a distance of two (2) inches above cant strip.

A raggle not less than eight (8) inches or more than twelve (12) inches above the roof deck is to be provided except where capped nailers are used.

Prime all masonry walls from top of roofing felts to raggle with Koppers Asphalt Primer. Allow to dry thoroughly.

In a uniform coating of Koppers Flashing Cement, install one (1) ply of Koppers No. 15 Asphalt saturated asbestos felt extending from the raggle to not less than four (4) inches from the base of the cant onto the roof. On top of this apply a second uniform coat of Koppers Flashing Cement into which embed one (1) ply of Koppers reinforced asbestos base flashing (reinforced fabric side down). Nail with one and one-half (1½) inch masonry roofing nails through flat tin discs along upper edge eight (8) inches o.c. maximum into mortar joints. For concrete construction, nail to treated wood nailing strips set in flush with the surface with appropriate nail through flat tin discs.

End laps for the two (2) plies shall be not less than three (3) inches and staggered not less than twenty-four (24) inches. End laps of reinforced base shall be nailed vertically a minimum of once into the wall at upper edge and once into the cant at a point not lower than the mid point of the cant.

End laps of reinforced base after nailing shall be covered with a strip of Koppers asbestos felt not less than four (4) inches wide set in a coating of Koppers Flashing Cement.

Coat entire surface of flashing with Koppers Flashing Cement or Koppers Chembond (including nail caps along top edge of flashing as well as top edges of felts to seal at wall).

Interply and top coatings shall be troweled uniformly, full height and continuously approximately one-eighth (⅛) inch thick. Plies must be laid in smoothly with no pockets, wrinkles or buckles.

Install metal cap flashing.

NOTE: Hot applied steep asphalt may be used as an alternate to the two (2) interply trowellings of asphaltic plastic cement. One (1) ply of No. 15 asphalt felt may be used in lieu of the one ply underlayment sheet of No. 15 asphalt asbestos felt when required. All other requirements of this specification must be adhered to.

5.2 Steep Roofs

SLOPE • 3 in. minimum—9 in. maximum
SURFACE • Mineral

deck construction:

Spec. No. 31A
See paragraphs A-1, B-1, C

Spec. No. 4A
See paragraphs B-2 & C

WOOD DECKS

Spec. No. 33A
See paragraphs A-2, B-1 & C

POURED CONCRETE

Spec. No. 9A
See paragraphs A-2, B-3 & C

POURED GYPSUM

Spec. No. 34A
See paragraphs B-1 & C

PRECAST GYPSUM

Spec. No. 35A
See paragraphs B-2 & C

PRECAST CONCRETE

Condition of Surface to Receive Roofing Materials

WOOD DECKS: Same as described under Spec. Nos. 1 and 2.
POURED CONCRETE AND POURED GYPSUM: Same as described under Spec. Nos. 5, 7, 12 and 13.
PRECAST CONCRETE: Same as described under Spec. Nos. 10 and 11.
PRECAST GYPSUM AND GYPSUM METAL BOUND PLANKS: Same as described under Spec. Nos. 12 and 13.

Application of Roofing Materials

A. Preliminary Procedure

A-1 (Spec. No. 31-A) Apply at right angles to incline of roof one (1) thickness of twenty-five (25) pound (5 pounds per 100 sq. ft.) sheathing paper over the entire surface of the deck lapping each sheet one (1) inch over the preceding sheet. Nail to hold in place.

A-2 (Spec. Nos. 33-A and 9-A) Apply to the entire surface of the deck a priming coat of Asphalt Primer and allow to dry for a period of not less than six (6) hours. Then:

(a) Over Poured Concrete: Mop deck completely with Koppers Steep Asphalt.

(b) Over Poured Gypsum: Strip mop the deck with six (6) inch wide moppings of Koppers Steep Asphalt on 12" maximum centers.

B. Application of Asphalt Felts

B-1 (Spec. Nos. 31-A, 33-A and 34-A) Apply at right angles to the incline over the entire surface, two (2) plies of Koppers No. 15 Asphalt Felt, lapping plies nineteen (19) inches. Nail each ply of felt two (2) inches from upper edge eighteen (18) inches o.c., with one and one-half (1½) inch barbed roofing nails through flat tin discs (or with staples for gypsum decks). Mop solidly between plies with Koppers Steep Asphalt.

B-2 (Specs. Nos. 4-A and 35-A) Apply at right angles to the incline over the entire surface, one (1) ply of Koppers No. 30 Asphalt Felt, lapping ply four (4) inches. Nail each ply edge on eighteen (18) inch centers with one and one-half (1½) inch barbed roofing nails through flat tin discs (or with staples for gypsum decks).

B-3 (Spec. No. 9-A) Apply at right angles to the incline over the entire surface, one (1) ply of Koppers No. 30 Asphalt Felt, lapping sheets six (6) inches.

Mop solidly each 6-inch lap with Koppers Steep Asphalt.

Nail each ply two (2) inches from lower edge on eighteen (18) inch centers.

When nailing strips are used, the felt shall be secured with three (3) one (1) inch barbed roofing nails through flat tin discs, two (2) inches, ten (10) inches, and eighteen (18) inches respectively from the upper edge at each nailing strip.

C. Application of Mineral Surfaced Roofing

(Spec. Nos. 4-A, 9-A, 31-A, 33-A, 34-A and 35-A)

Beginning at the low point, thoroughly mop a portion of the asphalt felt surface with Koppers Steep Asphalt, into which, while hot, embed a sheet of selvage edge mineral surface roofing, this to run across the slope of the roof. Selvage should be on upper edge. Nail in double staggered course along selvage with one (1) inch barbed roofing nails through flat tin discs, kept two (2) inches from the mineral surfacing and twelve (12) inches o.c. for each course. Mop the selvage of the sheet just laid and the adjacent area of asphalt felt surface with steep asphalt and into this, while hot, embed thoroughly the next sheet of mineral surfaced roofing, taking care that the lower edge meets the edge of the mineral surfacing of the sheet below. Nail as described for previous sheet. Repeat the process of laying sheets of mineral surfaced roofing shingle fashion until the entire area has been covered. Lap ends six (6) inches, nailing the underlying sheet with six (6) one (1) inch barbed roofing nails through flat tin discs, starting one (1) inch from the lower edge, spaced five (5) inches o.c. Coat the underside of mineral surfaced roofing at each end lap with Steep Asphalt and firmly embed in the surface of the underlying sheet. Carefully rub down edges. Where incline exceeds four (4) inches to the foot, roofing may be applied up and down the slope instead of across it.

When nailing strips are installed, sheets shall be nailed along the selvage edge with three (3) inch nails driven through flat tin discs, spaced five (5) inches apart, at each nailing strip and set back two (2) inches from the mineral surface.

General

Mineral surfaced roofing is to be cut in strips not exceeding twenty (20) feet in length prior to using, and is to be stacked flat for a sufficient time to permit these strips to become perfectly flat. Asphalt felt and mineral surfaced roofing shall be laid without wrinkles or buckles.

At junction of steep and flat roofing, the roofing on the flat surface is to be carried up the inclined surface not less than twenty-four (24) inches before steep roofing is applied. Application of steep roofing shall start at the point of junction with the flat roof.

Membrane below the insulation and insulation including methods of application are not part of built-up roofing. Suggestions described in this section are offered to assist the designer in establishing their normal position and to indicate requirements for a suitable base for the built-up roofing. See Section 2.3 Page 9.

General Requirements on pages 3 through 6 and Detailed Specifications on pages 20 through 26 are a part of this specification and must be adhered to where applicable.

Flashing Details

GENERAL INFORMATION

There are numerous flashing details that have been proven by experience over the years. There are normally a number of acceptable construction details for accomplishing one purpose. The architect should select a detail that best serves the purpose under the various and different conditions concerned with the specific job at hand. In certain cases, slight modifications are necessary to adjust a proven detail to job conditions or one method may serve better than another.

The details shown in this manual are some suggestions based on experience. Space limitations prohibit listing many others.

Design or selection is a responsibility of the architect.

Koppers representatives are available to review flashing details to assist the architect in providing the best details for specific jobs.

6.4 Application Detail

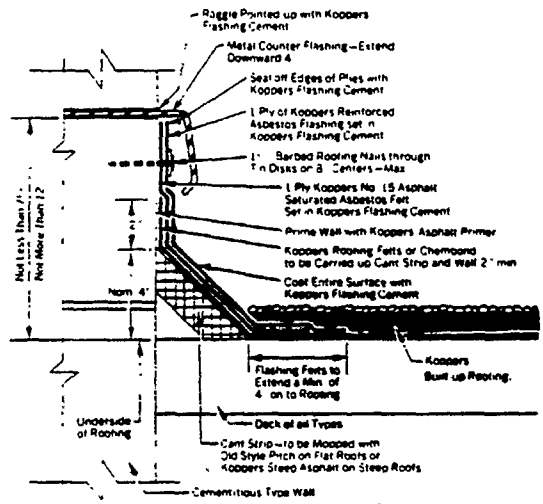

Specification No. 108

6.5 Application Detail

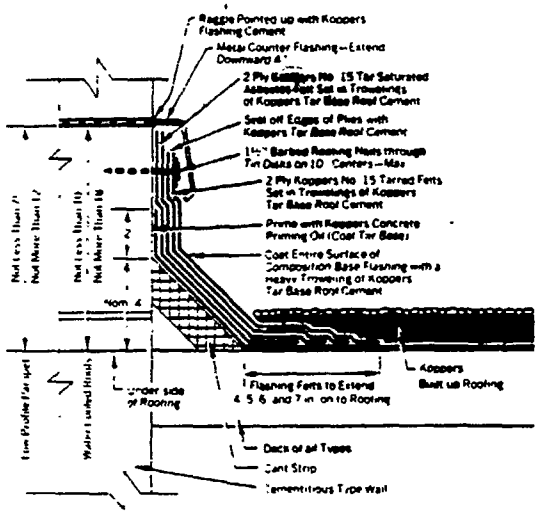

Specification No. 110

6.6 Parapet/Precast or Poured Concrete

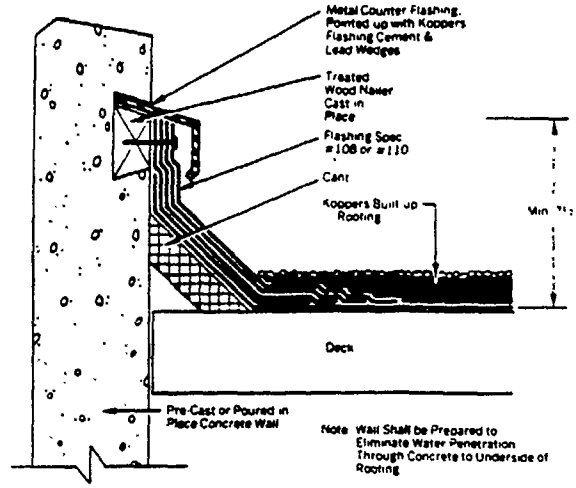

6.7 Parapet/Metal Curtain Wall

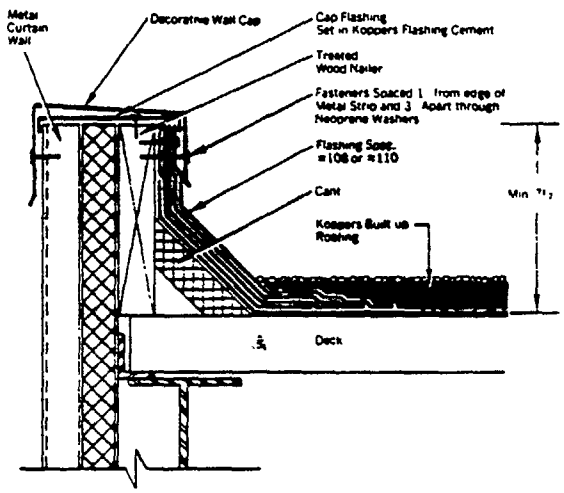

6.8 Parapet/Wall Cap

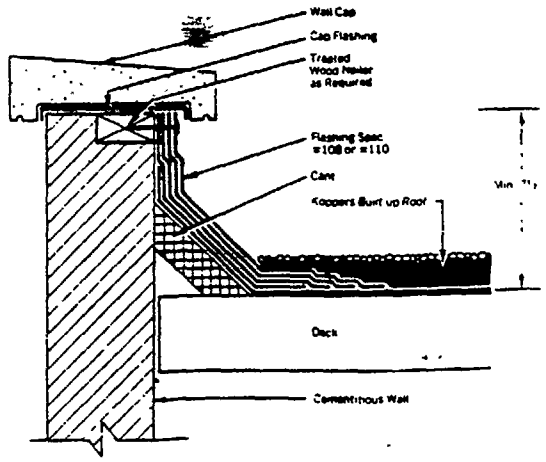

Materials	Plies or Coats Required	Units	For 100 LF x 12'—1 Square Approximate Quantity Required
Concrete Priming Oil	1	Gal.	½ Gal.—(basis 300 sq. ft. per gallon)
No. 15 Tarred Felt	2	4 sq. rl. (3' x 144 LF = 432 sq. ft.)	½ Roll
No. 15 Tarred Asbestos Felt	2	4 sq. rl. (3' x 144 LF = 432 sq. ft.)	½ Roll
Tar Base Cement	5	Lbs.	264 lbs.—(basis 4 x 44 lbs. per 100 sq. ft. at 1/16" per coat interply) (basis 1 x 88 lbs. per 100 sq. ft. at 1/8" per coat top coat)
Asphalt Primer	1	Gal.	½ Gal.—(basis 300 sq. ft. per gal.)
No. 15 Asphalt Asbestos Felt	1	4 sq. rl. (3' x 144 LF = 432 sq. ft.)	¼ Roll
Reinforced Asphalt Asbestos Felt	1	1 sq. rl. (3' x 36 LF = 108 sq. ft.)	1 Roll
Flashing Cement or Chembond	3	Lbs.	240 lbs.—(basis 3 x 80 lbs. per 100 sq. ft. at 1/8" per coat) Chembond 2 to 3 gallons per 100 sq. ft.

of the roofing and flashing system as efficiently as possible to prevent the metal from splitting the membrane.

Flashing should be installed as roofing progresses to prevent water damage to insulation or deck under the roofing. If this is not possible water cut-off's must be installed and later removed when flashing is installed. Metal counter flashing or a top seal of Glasfab and flashing cement must be installed as flashing progresses.

The basic Koppers flashings require a metal cap flashing to be inserted in the raggle immediately upon completion of base flashing. The cap flashing is to extend into the raggle not less than two (2) inches and is to have not less than a four (4) inch exposed apron extending down over the base flashing. Completely fill raggle with Koppers flashing cement.

NOTE:

1. If bonded flashing is required, it must be installed in conjunction with a Koppers bonded roof and can be bonded for standard periods up to but not greater than the period for which the roofing is bonded. To be bonded, flashings must be set at least 7½" above the roofing base.

2. If a Koppers 25-year bonded roof is specified, Flashing Specification No. 110 or No. 108 shall be used.

3. Metal Cap flashings are not bondable and are not included under any flashing bond.

4. Metal work of any description used as flashing or a part of a flashing system is not bondable and is not included under any flashing bond.

6.3 Specification No. 110

(for water cooled roofs)

Recommended for water and corrosive atmosphere exposure. Low capped and sealed flashings.

METAL CAP
COMPOSITION BASE (2+2)
COATED SURFACE

Application

Cant strips shall be installed at the angle between the roof deck and the parapet wall or any other similar perpendicular surfaces.

Extend plies of roofing felts and pitch moppings up all walls for a distance of two (2) inches above cant strip.

A raggle of not less than ten (10) inches above the roof deck is to be provided for water cooled roofs only.

Prime all masonry walls from top of roofing felts to raggle with Koppers Concrete Priming Oil (coal tar base). Allow to dry thoroughly.

Set two plies of Koppers Approved Tarred Felt in trowelings of Koppers tar base roof cement. Have plies extending from the bottom of the raggle; the first extending out onto the deck not less than four inches from the bottom of the cant strip, and the second, one inch beyond the first. Over this apply two layers of tar saturated asbestos felt similarly imbedded in Koppers Tar Base Roof Cement, each ply extending onto the deck one inch beyond the preceding ply.

Nail with one and one-half (1½) inch barbed roofing nails through flat tin discs at upper edge approximately ten (10) inches o.c. (For brick or block construction, nail into vertical mortar joints. For concrete construction, nail to treated wood nailing strips set in flush with the surface.)

Felts are not to exceed ten feet three inches (10'3") in length. Ends of connecting strips are to overlap three (3) inches and are to break at least twenty-four (24) inches with laps of underlying strip.

All plies of felt shall be firmly pressed into the trowelings of Koppers Tar Base Roof Cement so that there will be no wrinkles in the finished surface.

Coat the entire surface of the composition base flashings with a heavy troweling of Koppers Tar Base Roof Cement.

Install metal cap flashing.

NOTE: This specification must be followed for flashing water-cooled roofs.

It may be specified for use with any Koppers roof in lieu of standard flashing specification where additional protection against water laying in contact with flashing is anticipated except Specification No. 20.

Flashing Details (continued)

Edge Details Felt Envelope

7.2 Tapered Cant

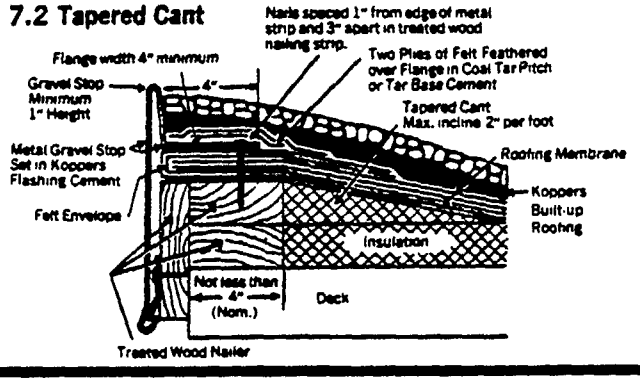

7.3 Flat and Steep Junction

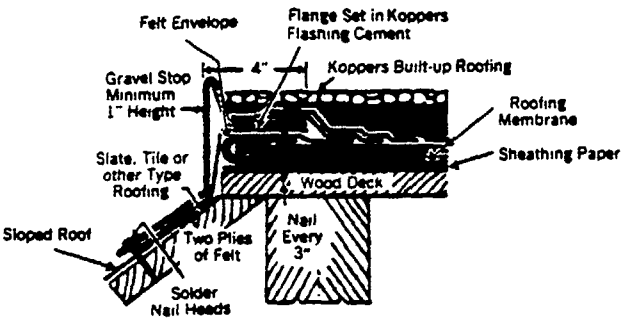

7.4 Hanging Gutter

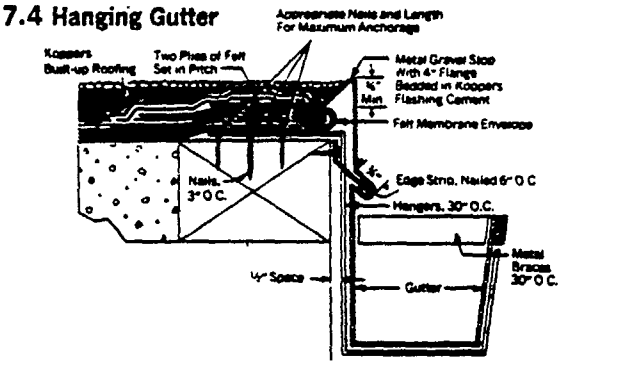

7.5 Vented Edge

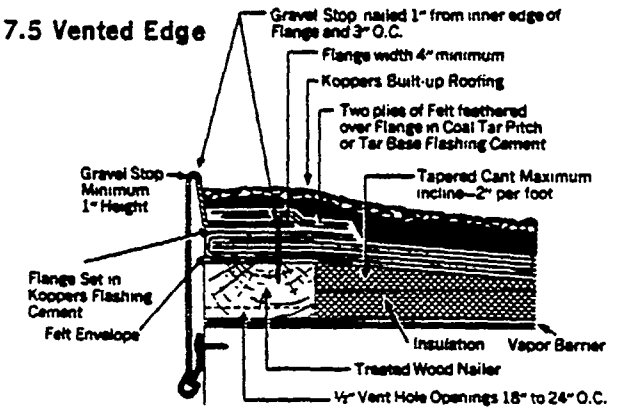

Edge Details Flashing Cement Pitch Dam

7.6 Tapered Cant

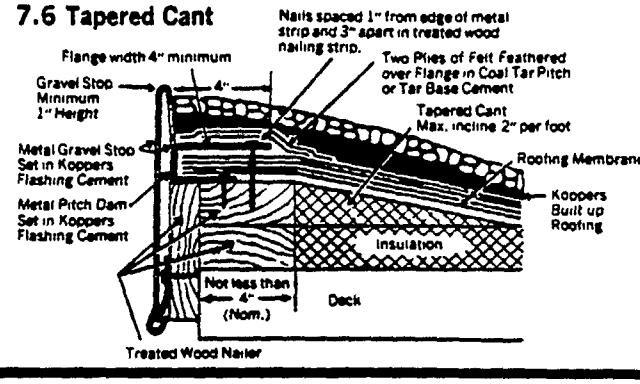

7.7 Flat and Steep Junction

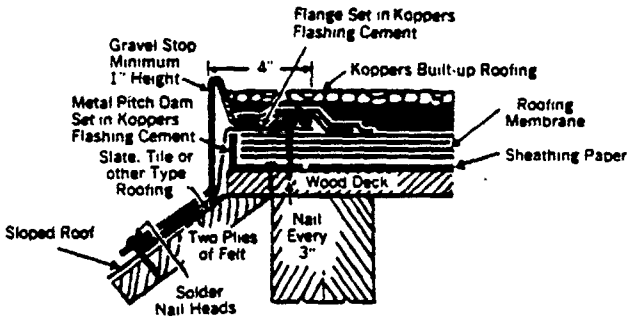

7.8 Hanging Gutter

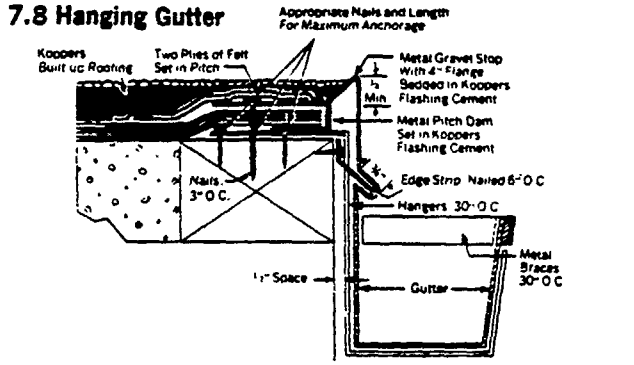

7.9 Vented Edge

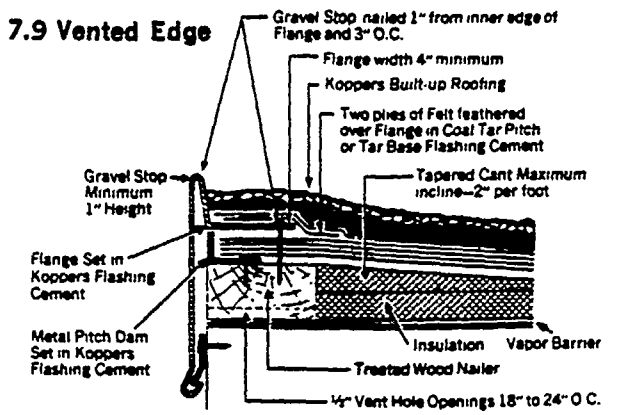

Flashing Details (continued)

6.14 Raised Edge

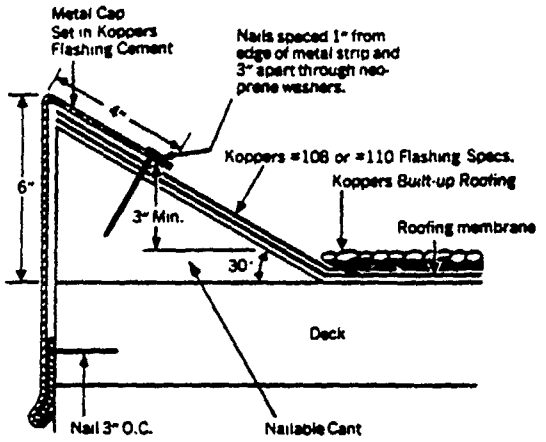

7.10 Roof Vent

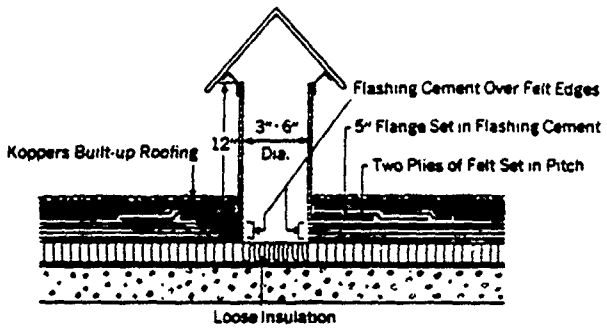

7.11 Vent Pipes, Stacks, Flagpoles, and Other Projections 7.12

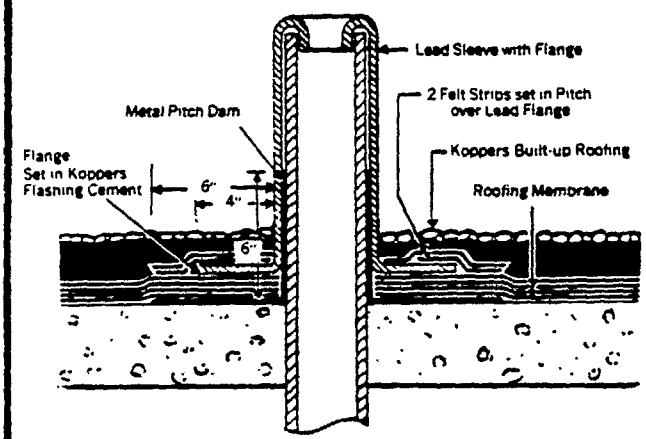

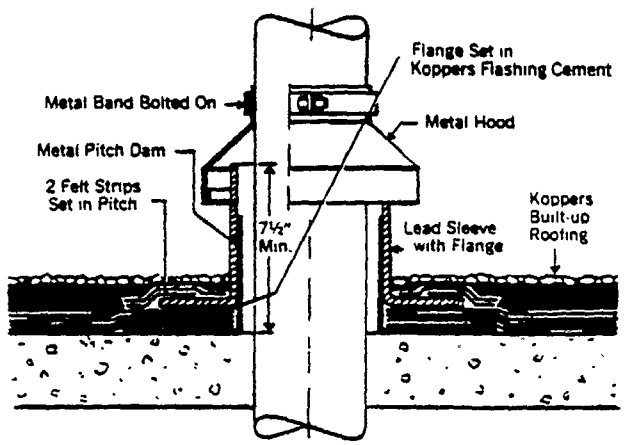

All vent pipes, stacks, flagpoles, or other projections penetrating the built-up roofing, whether indicated on drawings or not, must have a proper metal sleeve flashing with flange, pan flashing with flange or other flanged flashing installed.

Behind metal sleeve and beneath roofing membrane next to deck install metal pitch dam as shown in detail. The sheet metal flange must be cemented to the surface of the felt with a mopping of hot coal tar pitch. Over flange apply, with alternate moppings, two (2) reinforcing plies of tarred felt so that the first extends not less than three (3) inches beyond the outer edge of the flange and the second not less than six (6) inches.

7.13 Walkways Treated Wood Walkway

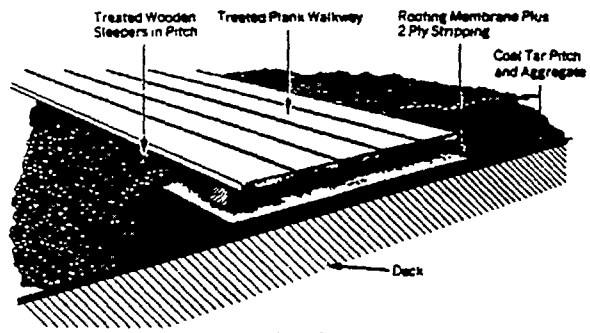

Refer to General Requirements, page 3.

7.14 Traffic Pad

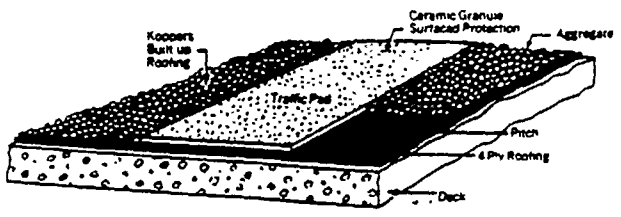

Refer to General Requirements, page 3.

pports and Angle Irons

6.15

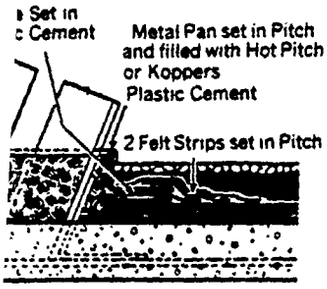

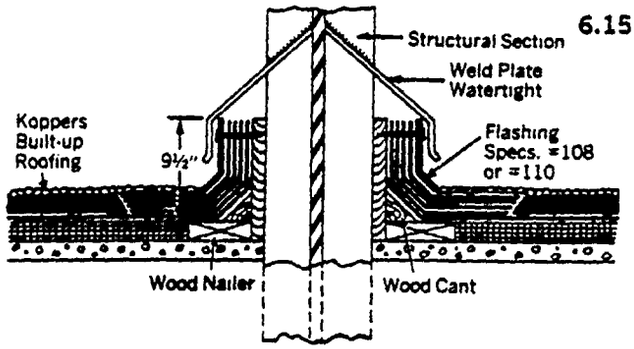

lumns, sign supports and angle roofing, pitch pockets should be ın.
e cemented to the surface of the lashing cement. Over the flange ıs, two (2) reinforcing plies of ıds not less than three (3) inches nge and the second not less than

Fill metal pan with hot coal-tar pitch or flashing cement. Paint exposed sections of all reinforcing rods with dampproofing paint.

As an alternate to the installation of pitch pockets wooden curbed base units with cant strips can be installed to accept a standard built-up composition-base flashing. Intricate metal cap flashings for this unit must be fabricated and continuously welded to the projection to assure a watertight metal cap.

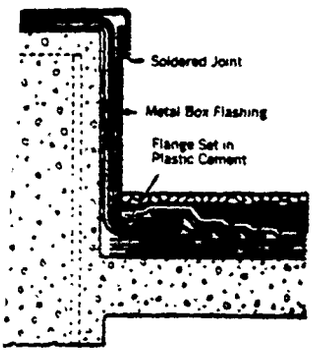

Exposed surface of all stub column projections must be protected with 3 plies of tarred roofing felt cemented on with a trowel application of Flashing Cement. Felt is to be carried out onto the surface of the roofing felts so that the first extends not less than three (3) inches, the second not less than four (4) inches, and the third not less than five (5) inches.

Trowel over the entire surface of felts just applied, one (1) coat of Flashing Cement.

All stub column projections must have a metal box flashing with flange furnished and installed over the cemented felts.

The flange of the metal box flashing must be cemented to surface of the roofing felts with a mopping of hot coal tar pitch. Over the flange apply with alternate moppings, two (2) reinforcing plies of tarred felt so that the first extends not less than three (3) inches beyond the outer edge of the flange and the second not less than six (6) inches.

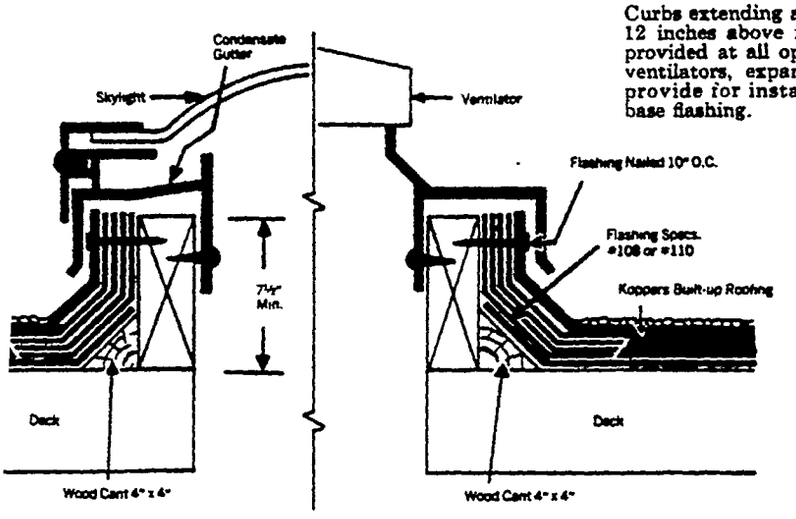

Curbs extending a nominal 8 inches to 12 inches above roof surface shall be provided at all openings for skylights, ventilators, expansion joints, etc., to provide for installation of adequate base flashing.

KOPPERS

Pittsburgh, Pennsylvania

Bonded Roof

Bonded (Blanket Bond) by

The Aetna Casualty and Surety Company

800 Chatham Center • Pittsburgh, Pennsylvania 15219

Roofing Contractor

Certificate of Coverage No.

Address
City &
State

Owner

Address

Name of Building

Address

Guarantee Period: Years from Date of Completion of Roof.

Amount of Guarantee: $

Total Area of Bonded Roof Squares. Bonded Composition Flashing Lineal Feet.

This is to certify that the above-named owner is entitled to the benefits of the Bond set forth below.

Koppers Company, Inc.

By _____

KOPPERS COMPANY INC., a corporation of the State of Delaware, with offices in the Koppers Building, Pittsburgh, Pennsylvania 15219 (hereinafter referred to as "Koppers") and THE AETNA CASUALTY AND SURETY COMPANY a corporation of the State of Connecticut, with office at 800 Chatham Center, Pittsburgh, Pennsylvania 15219 (hereinafter referred to as the "Surety"), guarantee to each owner of a building within the United States and its possessions upon which certain materials sold by Koppers were used in the construction of a roof and to whom there has been issued a Certificate of Coverage under this bond, properly completed and signed by a duly authorized representative of Koppers, that subject to (A) the stipulations and conditions herein contained, and (B) the maximum aggregate liability specified in said Certificate, Koppers will during the period set forth in said Certificate, at its own expense, make any repairs resulting solely from ordinary wear and tear by the elements that may be necessary to maintain said roof in watertight condition. The term "ordinary wear and tear by the elements" as used herein shall not include damage caused by lightning, windstorm, hailstorm or other phenomena of the elements. The term "roof" as used herein shall include all composition flashing specifically referred to in a Certificate of Coverage, and shall exclude all other flashing and metal work.

This bond is made subject to the following further conditions.

(a) The owner of said roof shall notify Koppers promptly in writing if such repairs are required, and in case of failure of Koppers to make said repairs within a reasonable time shall notify the Surety by registered letter of such default.

(b) Nothing in this bond shall render Koppers or the Surety liable in any respect for any damage to said building or any contents thereof or for any consequential damages.

(c) Neither Koppers nor the Surety will be liable for any damage to said roof caused by
1. Traffic, or storage of materials thereon.
2. Settlement, expansion, contraction distortion, cracking or failure of the roof deck, copings, walls, structural members or foundation of said building.
3. Distortion expansion or contraction of any unbonded flashings or any metal work
4. Failure of any materials used as a roof base or as insulation over which said roof is applied.
5. Failure of materials supplied by others
6. Infiltration or condensation of moisture in, through, or around the walls, copings, building structure or underlying or surrounding materials.

(d) All liability of Koppers and the Surety shall cease immediately and automatically if said roof is used in a manner or for a purpose for which it was not designated, or if any additions alterations or repairs (excepting only emergency temporary repairs) are made by anyone except a Koppers-Approved Roofer using Koppers materials under the supervision of or subject to the inspection of Koppers.

(e) Where tile, cement, and/or other traffic surfaces are built over said roof neither Koppers nor the Surety will be responsible under this bond for the expense of removing or replacing such traffic surfaces or for repairing any damage to the roof occasioned by the installation or action of such surfaces.

Signed, sealed and dated as of this 1st day of January 1968.

ATTEST: Templeton Smith
ASSISTANT SECRETARY

KOPPERS COMPANY, INC.
By Otto Wheeley
VICE PRESIDENT

ATTEST: Ann Krametsky
RESIDENT ASSISTANT SECRETARY

THE AETNA CASUALTY AND SURETY COMPANY
By Samuel C. Moore Jr.
RESIDENT VICE PRESIDENT

This is to certify that the original of the above Bond is on file with PITTSBURGH NATIONAL BANK, Pittsburgh, Pennsylvania.

Dated: January 1, 1968

PITTSBURGH NATIONAL BANK
By S. D. Schaefer
VICE PRESIDENT

T-310 REV 6 3M Printed in U.S.A.

Koppers sponsors an architectural design competition. The competition is offered on a selective basis to accredited schools of architecture, nationwide. It is intra-scholastic only, with separate and identical awards being made to the winning student at each participating school.

Participation is offered to fourth year or sub-senior students only. The program is designed to be incorporated into the regular fourth year curriculum in which all sub-senior students would be involved.

Awards consist of a $1,000 grant for tuition assistance at each of the several participating colleges and universities. In such cases where tuition costs may be less than $1,000, the balance of this fund is placed at the disposal of the head of the Department of Architecture for use in furthering the educational aims of his department.

Additional information and complete details can be obtained by writing Koppers Co. Inc., Architectural Student Design Competition.



flat roof design competition for architectural students

SALES OFFICES

CHARLOTTE, NORTH CAROLINA 28203
1407 East Blvd.
P.O. Box 3186
Tel: 704-375-4427

***CHICAGO, ILLINOIS 60603**
122 South Michigan Avenue
Tel: 312-939-2400

DETROIT, MICHIGAN 48203
301 W. Eight Mile Road
Tel: 313-366-5200

HOUSTON, TEXAS 77022
4101 N. Freeway. P.O. Box 16220
Tel: 713-697-2051

KANSAS CITY, MISSOURI 64111
Room 5 V.F.W. Building
Tel: 816-531-6680

***LOS ANGELES, CALIFORNIA 90005**
3440 Wilshire Boulevard
Tel: 213-383-4111

***NEW YORK, NEW YORK 10022**
430 Park Avenue
Tel: 212-755-2810

PITTSBURGH, PENNSYLVANIA 15219
612 Chatham Center
Tel: 412-391-3300

ST. LOUIS, MISSOURI 63101
706 Chestnut Street
Tel: 314-241-8096

ST. PAUL, MINNESOTA 55115
1000 Hamline Avenue
Tel: 612-646-7801

SAN FRANCISCO, CALIFORNIA 94010
(Burlingame)
1801 Murchison Drive
Tel: 415-692-3330

WASHINGTON, D.C. 20006
1725 K Street N.W.
Tel: 202-333-8282

***BIRMINGHAM, ALABAMA 35189**
(Woodward)
Tel: 205-744-9110

*District Offices





KOPPERS
Architectural and
Construction Materials

KOPPERS COMPANY, INC. Pittsburgh, Pa. 15219

OM 49-108

PRINTED IN U.S.A.