OWENS/CORNING
FIBERGLAS

PLAINTIFF'S EXHIBIT
CHV-564

Thermal Insulating Wool (TIW) Types I & II

Resilient, lightweight, inorganic insulation for applications up to 1000 F.

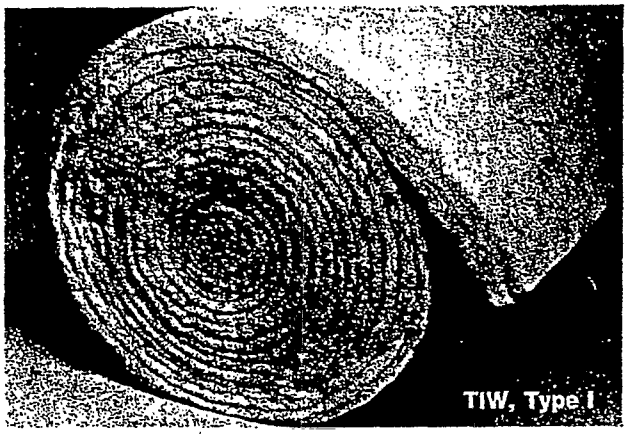
TIW, Type I

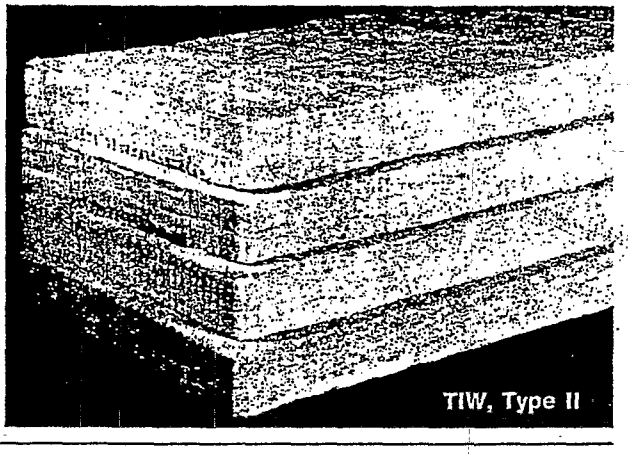
TIW, Type II

uses

TIW, Type I is used in applications requiring a lightweight insulation such as in panel systems, flexible wrap, industrial ovens, or surfaces having irregularities. It's low compressive strength does not make it suitable for use as a base wool for metal mesh blankets.

TIW, Type II is especially suitable for use in metal mesh blankets, and for use on boilers, vessels and many other types of industrial equipment operating at temperatures up to 1000 F. It may also be used in panel systems for precipitators ducts and breechings where more compressive strength than Type I is needed.

description

TIW, Type I and II are off-white to light tan, non-combustible wool with long, resilient, inorganic glass fibers bonded with a thermosetting resin. TIW, Type I is available in batts or rolls, while TIW, Type II comes in batts only.

benefits

Lowers Operating Costs — the low K factor of Fiberglas* Thermal Insulating Wool can substantially lower fuel costs by reducing heat loss, and helps develop more comfortable working conditions in equipment rooms.

Lowers Installation Costs — larger blankets cover greater areas reducing installation cost. No tedious block-by-block hand lay-up. No drilling for studs. Type II blankets are easily impaled over welded studs or pins with speed washers or may be held in place with wire ties, metal lath or lagging.

Dimensionally Stable — will not shrink, rot or slump.

Non-Corrosive — inorganic fibers of Fiberglas TIW Type I and II, will not cause or accelerate corrosion of any metal. It cannot cause stress corrosion cracking of stainless steel.

Moisture Resistance — Fiberglas TIW Type I and II do not absorb moisture. If the insulation becomes wet, it dries out rapidly when exposed to dry air, and without any residual loss of integrity or thermal efficiency.

Fire Safe — glass fibers will not burn or support combustion.

Performance characteristics

	Type I	Type II
Moisture absorption % by volume	0.1% or less	0.2% or less
Temperature limit	1000 F	1000 F
Bacteria and fungus resistance	Does not breed or promote	
Odor	Essentially odorless	

Specification compliance:

TIW, Type I — HH-1-558a Form B — Blankets and Felts, Flexible Type I, Class 8

TIW, Type II — HH-I-558a Form B — Blankets and Felts, Flexible Type I, Class 8
Mil-1-2818 B — Insulation Blanket, Thermal Fibrous Material (Requires waiver on ignition loss)

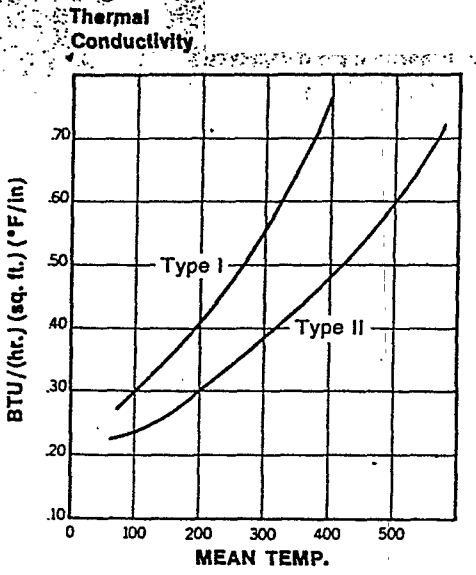

Sizes

TIW, Type I
Standard Roll Sizes
Width — 24" or 36"
Thickness 1" 2" 3" 4"
Lengths 76' 76' 52' 38'
Note: MTO thicknesses are available in ¼" increments
MTO widths are available 12", 18", 24" and 72"

TIW, Type II
Standard Batt Size
24" x 48"
24" x 96"
Made-to-Order
Width — 10" (min) to 38"
Length — 10" (min) to 117"
Thickness — 1"-3" (½" increments)

Recommended Thicknesses

Recommended thickness, heat loss, efficiency and surface temperature data are provided for the various Commercial, Power and Process Industries so that the design engineer can better select the thickness required for his specific job conditions. On outdoor work increase recommended thickness at least ½ inch to compensate for wind conditions.

TIW, Type I

Operating Temperature	(Ambient Air 80F) RT	HL	ST
500	4	55	114
600	5	64	119
700	6	75	126
800	7	90	135
900	8	106	145
1000	8.5	131	160

RT — recommended thickness (inches)
HL — heat loss (Btu/hr/sq. ft.)
ST — surface temperature (degrees F)

TIW, Type II

Operating Temperature	(Ambient Air 80F) COMMERCIAL			POWER			PROCESS		
	RT	HL	ST	RT	HL	ST	RT	HL	ST
200	.75	35	102	1.5	21	91	1.0	26	93
300	1.5	38	103	2.0	30	95	1.5	37	99
400	2.5	38	103	2.5	39	100	2.0	47	104
500				3.0	47	104	2.5	58	109
600				3.5	56	108	3.0	68	114
700				4.0	64	112	3.5	79	120
800				5.0	74	117	4.0	90	125
900				5.5	83	122	4.5	101	131
1000				6.0	94	127	5.0	114	137

OWENS/CORNING FIBERGLAS

OWENS-CORNING FIBERGLAS CORPORATION
Industrial and Commercial Construction Materials Division
Fiberglas Tower, Toledo, Ohio 43601

CHEV BB
0000389

PREMETCO PRICE LIST — ROOFING SHEETS RS-4

Effective 3-1-75 Supersedes RS-3

2-26-76

PREMETCO® CORRUGATED SHEETS

Gage & Width	Plain NMB* (Prices Per Sq. Ft.)	Plain WMB*	Embossed NMB*	Embossed WMB*
.016 X 33	.375	.385	.385	.398
.016 X 44	.375	.385	.385	.398
.020 X 33	.465	.479	.479	.493
.020 X 44	.465	.479	.479	.493
.024 X 33	.546	.560	.560	.574
.024 X 44	.546	.560	.560	.574
.032 X 33	.730	.743	.743	.756
.032 X 44	.730	.743	.743	.756
.040 X 33	.938	.952	.952	.965

*NMB—No Moisture Barrier
*WMB—With Moisture Barrier

Length	No. of Sq. Ft. Per Sheet Width of Sheet 26"	33"	44"
6'	13	16.5	22
6'-6"	14.08	17.88	23.83
7'	15.17	19.25	25.67
7'-6"	16.25	20.63	27.5
8'	17.33	22	29.33
8'-6"	18.42	23.38	31.17
9'	19.5	24.75	33
9'-6"	20.58	26	34.83
10'	21.67	27.5	36.66
10'-6"	22.75	28.88	38.5
11'	23.83	30.25	40.33
11'-6"	24.92	31.63	42.17
12'	26	33	44
12'-3"	26.54	33.69	44.92

FINISHES:

1 Plain Mill
2 No. E-5 Stucco Embossed Pattern
3 "Kris-Kros" Corrugations (3/16" Corrugations Extending Horizontally Over the Vertical 1¼" or 2½" Corrugation). "Kris-Kros" Offered at no Premium.
4 Epoxy Coated Sheets Available, See Back of J-4.
5 Stainless Steel Available in All Types on Special Inquiry.
6 Steel-Cote (Electro—Galvanized—with Vinyl Protective Coating in Colors on Special Inquiry).
*7 Moisture Barrier (Premetco offers two types of barriers Polykraft—50 lb. kraft paper with 1 mil of polyethelene.
Poly—Surlyn—2 mils of plastic film, pigmented and pinhole free. (no paper). U/L approved Both barriers are continuously heat-sealed to the aluminum.

ALLOY: 5005 or 3003-H-14 Specification Alloy.

A set-up charge of $15.00 will be charged on orders of less than 50 sheets. A skid charge of $12.50 will apply for each 100 sheets. On 200 sheets or more, 10' or greater in length, the above prices will be F.O.B. delivered within the continental limits of the U. S.

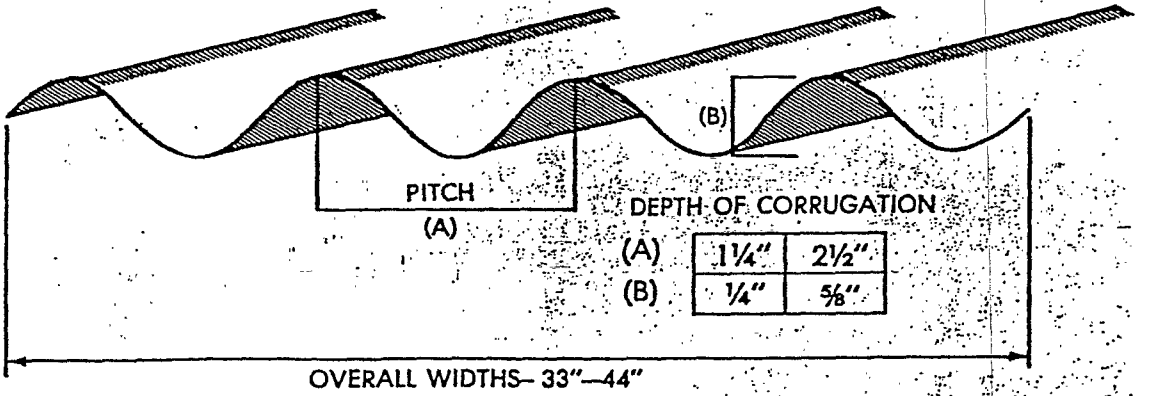

PREFORMED METAL PRODUCTS CO., INC.
P. O. Draw 1426, 606 Benton Kelly Drive, Shreveport Louisiana 71164
Telephone 631-1111/Area Code 318/ Telex 50-7470 Premetco Shv.

[illegible] TEXAS PARAMOUNT, CALIF. CLEVELAND, OHIO

CHEV BB
0000390

H J JONES COMPANY, INCORPORATED
BOX 34 DAYTON VIEW STATION • DAYTON, OHIO 45406 • PHONE 263-3442 • AREA CODE 513
MANUFACTURER AND SUPPLIER FOR THE INSULATION AND SHEET METAL TRADES

SHOULDER STUD
WITH ANNULAR GROOVES

Not in Stock



STANDARD SPECIFICATIONS

D	C	B	L	FERRULES
5/16	.187	.375	AS REQUIRED	F-312

USE: SECURING INSULATION & CORRUGATED SHEETING ON TANKS & BUILDINGS.

MATERIAL: LOW CARBON STEEL

C - 0.23% MAX. P - 0.040% MAX.
MN - 0.60% MAX. S - 0.050% MAX.

MECHANICAL PROPERTIES (COLD DRAWN)

TENSILE	72,000 PSI
YIELD	61,000 PSI
ELONGATION IN 2 INCHES	20%

STAINLESS STEEL

MECHANICAL PROPERTIES

TENSILE	85,000 PSI
YIELD	55,000 PSI
ELONGATION IN 2 INCHES	55%

PLATING: CADMIUM PLATING IS AVAILABLE

FLUX: SOLID FLUX LOAD IS STANDARD

NO.	A	F	C	D	F	G	M
F312	.322	.445	.406	.578	.156	.125	.390

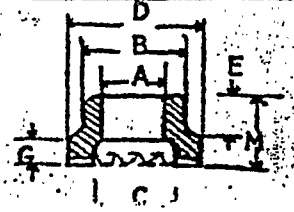

ALL ORDERS INCLUDE FERRULES WHICH ARE A COMPONENT OF THE STUD AND NOT SOLD SEPARATELY.

ALUMINUM RETAINER OR SETLOK CAP

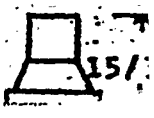

15/

CHEV BB
0000391