PLAINTIFF'S EXHIBIT

BAB-267

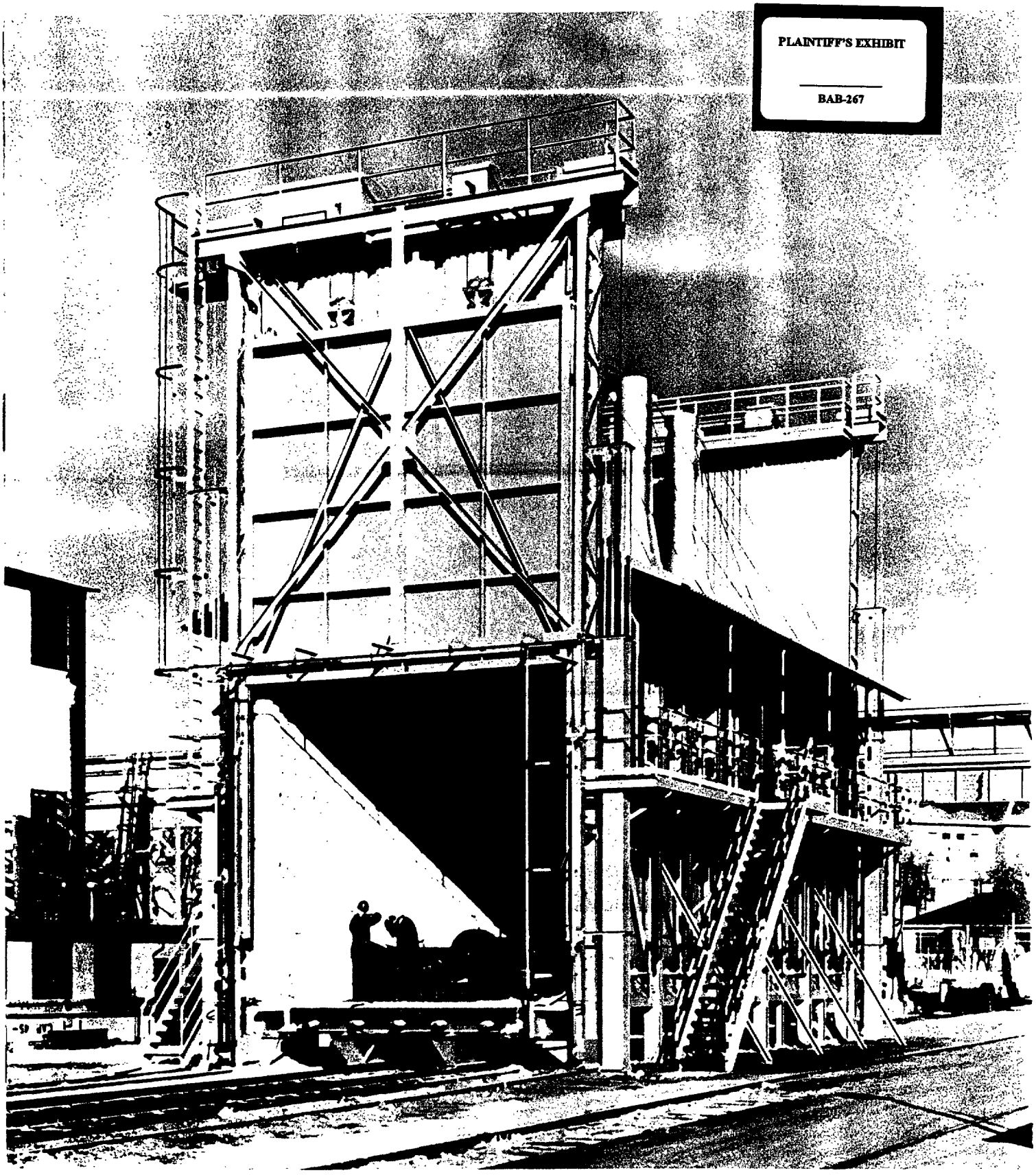

Ceramic fiber blanket as a furnace hot-face lining.

Babcock & Wilcox

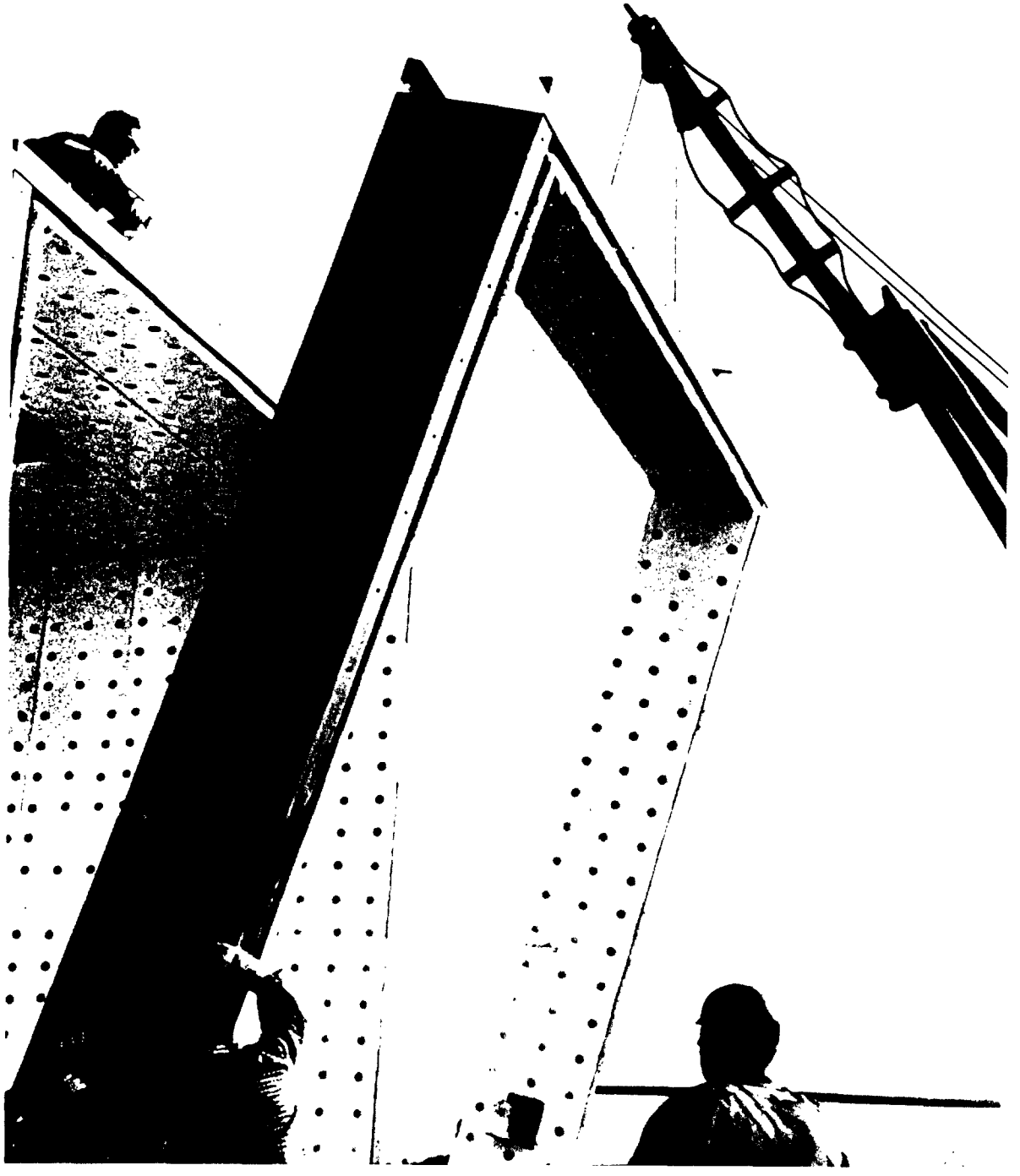

Fig. 1 Field erection of shop fabricated modules for a pressure vessel stress relieving furnace.

Ceramic fiber blanket as a furnace hot-face lining.

By Roger Clark, Sales Manager—Ceramic Fibers
The Babcock & Wilcox Company, Refractories Division, Augusta, Georgia

Changes now being made in mechanical engineering by application of fibrous mixes, alloys and ceramics have been compared to the "revolution" in the electronics industry caused by solid-state physics.

The commercially important alumina-silica fibers, more commonly called ceramic fibers, are presently very valuable as high temperature insulation. A new application of ceramic fiber is in blanket form as the primary exposed hot-face lining in a broad range of furnaces and kilns. New techniques make it possible for the ceramic fiber to be fully utilized by the furnace designer.

Properties of interest.

Ceramic fiber blanket has several properties which recommend it as a replacement for conventional refractories in furnace linings. Resiliency is the most important. Furnace linings now use some form of firebrick, insulating firebrick, plastic or castable. They all require a massive steel container that prevents the relatively inelastic hot-face lining from moving. When resilient fibrous linings are installed this massiveness is not needed.

A first step toward use of fibrous linings is shown in Fig. 1. Each module's complete hot-face lining was shop fabricated before field erection. The furnace shell steel is bent so that the module edge provided support without external structural steel shapes. A resilient lining is required because of the flexing the modules experience during fabrication, shipment and erection.

A fibrous lining's ability to withstand mechanical shock is illustrated in Fig. 2. The hood maintains ingots at a red-heat temperature during 110-mile journeys by truck. The lining withstands the shock of road transport, occasional blows from being dropped, or when struck by a crane.

Various types of mechanical movement or thermal expansion are primary causes of failure of firebrick or insulating firebrick linings. This does not happen with ceramic fiber linings because individual expansion of the fiber is taken up by the interlocking of the structure, resulting in zero net thermal expansion. Expansion joints are not required in a fibrous lining.

Ceramic fiber insulation has a lower conductivity than conventional furnace lining materials. This makes possible the use of linings normally one-half the thickness of insulating firebrick. Lightweight is another advantage. And, it can result in a heat storage approximately one-quarter that of insulating firebrick.

In Fig. 3 heat storage and furnace shell temperature of a fibrous lining is related to typical insulating firebrick and fireclay brick constructions at 1800 F. There are dramatic differences in heat storage and lining weights per square foot of wall surface.

A third advantage is resistance to thermal shock. For optimum lining life, insulating firebrick and hard brick linings must be operated in a way that will keep thermal shock at a minimum. Ceramic fiber blanket linings have not shown any tendency to come apart due to thermal shocking considerations in up to six years of service. This advantage, coupled with low heat storage, is possibly the most important to the furnace operator.

Most furnaces in the ceramic and ferrous metals industry are cyclical. If the heating and cooling portions of the cycle are speeded up, as they can

be when ceramic fiber linings are used, savings are realized in the heating operation through reduction in the cycle time.

Accepted temperature use limit of ceramic fiber is presently approximately 2300 F. The fibers retain their resiliency and fundamentally do not change in appearance up to this temperature. However, the currently recommended fastening method uses heat resistant alloys, which have lower temperature use limits than the fiber. Use of these alloys prevents full utilization of the fiber's temperature range. This use limit is presently set tentatively at 2250 F. While chrome nickel alloys do not have high strength at these temperatures, optimum strength is not necessarily required because ceramic fiber linings are light.

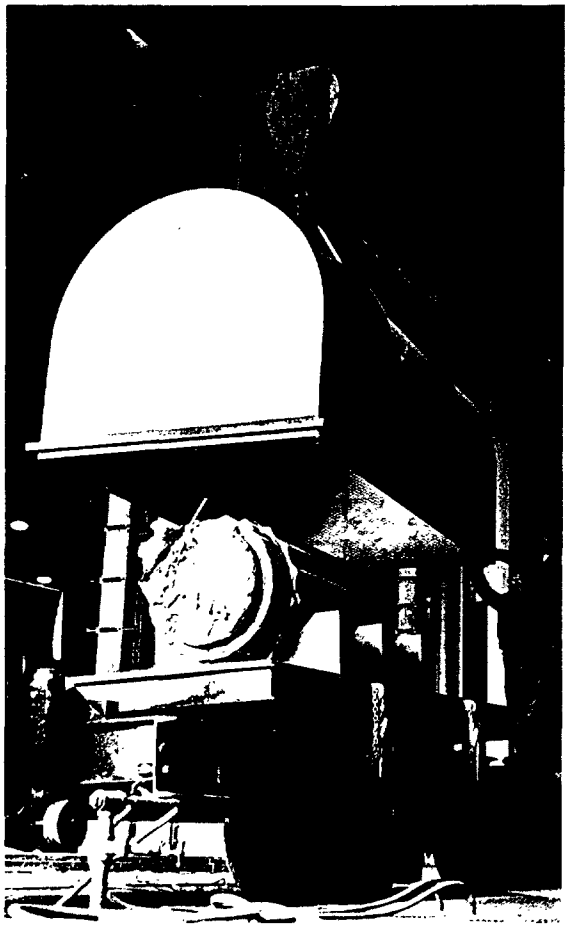

Fig. 2 Hood covers red-hot ingots during 100-mile journeys.

The few limitations.

There are some limitations to use of ceramic fiber linings. While ceramic fiber is essentially fragile, it has exhibited more than adequate structural integrity and strength to allow use of the necessary fastening devices. Field installations have adequately tested this and long life has been rendered with the present fastening designs.

The blanket linings will not take direct mechanical abuse, such as striking the wall on loading or unloading the furnace. This could be a problem with any lining if the blow is severe. The fibrous lining is more readily repaired than conventional linings by cutting out the torn area with a knife and replacing with new blanket.

A large pressure vessel annealing furnace where enough clearance was not allowed for the operator to enter the furnace and attach thermocouples to the vessel offers an example of mechanical abuse and its solution. The lining was being abraded as the operator squeezed between the vessel and the furnace wall. The problem was solved by installation of an alloy wire netting on the surface of the lining. This has prevented further damage.

High velocities may be another limitation. These typically occur in collection flues, breechings, stacks, baffles and the relatively small number of heat-treating furnaces that use gas recirculation. Because of the measurement problems involved, it is difficult to define the velocity the blanket will withstand.

Velocity problems can be met by a spray of rigidizer on the lining surface. Other cases can be handled by placing poultry wire netting over the lining or, in very aggravated cases, by placing an expanded metal lath where the diagonals are orientated in a direction to deflect the velocity away from the lining rather than into it. Where these solutions are not practical, various converted forms

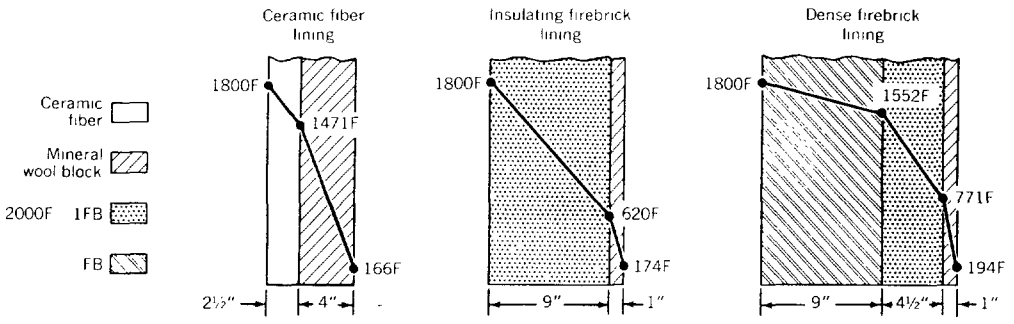

Heat loss Btu/ft²/hr	175	178	195
Heat storage Btu/ft²	1824	5497	48,381
Weight, lb/ft²	7.33	23.2	116

Fig. 3 Fibrous lining compared to other wall constructions for equivalent furnace shell temperatures.

of alumina-silica fibers may be used. For example, a ceramic fiber block form containing various organic and inorganic binders is available and can be used instead of a blanket. Vacuum-formed board is also available. Both of these forms have been used to solve trouble areas within a furnace and as complete linings.

Ceramic fiber linings have not been widely utilized in severely reducing atmospheres. However, this is not a major limitation as all refractories are subject to this damage. The extent of the damage depends upon the amount of hydrogen or carbon monoxide present, the furnace temperature and the quantity of readily reducible oxides in the lining. In severe cases, a high purity ceramic fiber blanket is supplied. Any lining in a hydrogen atmosphere must be thicker than it would be in an air atmosphere because of hydrogen's higher thermal conductivity.

Many variations to the standard design have been developed to meet these limitations and more fully utilize the fibrous lining concept.

Development of the ceramic fiber furnace lining application has presented few problems. In the approximately 116 ceramic fiber blanket furnace linings installed, not a single case of lining failure has been recorded. The few problems which have occurred were small and readily corrected.

Recalling the experiences of the 1930's when insulating firebrick replaced many dense fireclay brick furnace constructions, places the advantages of ceramic fiber blanket in proper perspective. The advantages realized with insulating firebrick were:

- The thinner linings made possible by its lower thermal conductivity.
- The increase in speed of heating cycles, which resulted from its lower weight and low heat storage.

Furnace designers developed techniques for using insulating firebrick in order to utilize its advantages. Today's furnace designers are developing designs that utilize the new advantages offered by ceramic fibers.

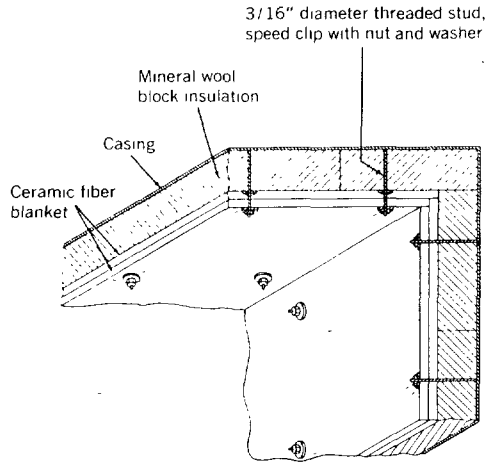

Fig. 4 The common technique for anchoring ceramic fiber furnace linings.

Installation techniques.

The primary design currently employed to anchor ceramic fiber lining is shown in Fig. 4. Roof and wall constructions are identical. The furnace shell is sheet steel. Studs $\frac{3}{16}$ in. in diameter of the appropriate alloy are welded to the steel on 12- to 14-in. centers in both directions. Spacing is laid out so that the blanket edges are within 3-in. of a stud. Although the studs can be handwelded, gun welding is more economical. Studs are threaded and are about ½-in. longer than the lining thickness. The lining is actually a dual component lining utilizing a 14-16 lbs/cu ft mineral wool block as back-up insulation for the hot face component of 8 lbs/cu ft ceramic fiber blanket.

This dual component selection is primarily a function of economics, since mineral wool block

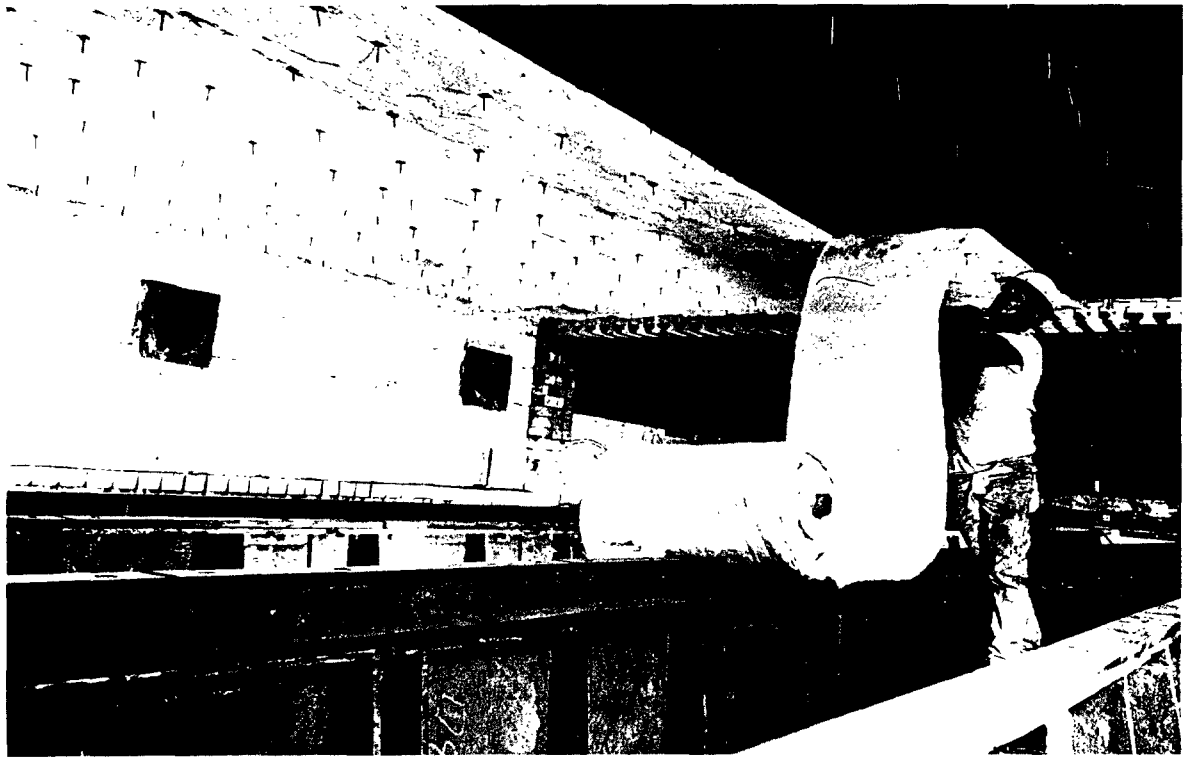

Fig. 5 A walking beam billet preheating furnace with partially completed firebrick baffle. Castable will be poured in walking beams.

costs approximately 30¢/board ft while ceramic fiber blanket is $1.50 /board ft. Linings are composed of an optimum combination of the two components for best economy. The appropriate guideline to determine the amount of block used is that the interface temperature between the ceramic fiber blanket and the mineral wool block be below 1450 F. Mineral wool block was selected because it can be readily impaled upon the studs. The furnace corners are made by bringing together each successive layer of the components to form a labyrinth joint.

Fig. 5 shows the remainder of the process. It's a walking beam billet heating furnace under construction. After stud welding, the appropriate thickness of mineral wool block is impaled upon the studs. Although multiple layers can be used, only one layer is generally required. Ceramic fiber in appropriate thickness is then impaled.

Two methods have been used successfully to keep the hot-face joints from opening and exposing the back-up block to full furnace temperature. The first, commonly used above 1600 F, is to overlap the edges of multiple layers of ceramic fiber blanket. Although overlapping is a foolproof approach, it does mean a somewhat higher installation cost.

The second method for lower temperatures is to install one layer of ceramic fiber blanket with the edges supercompressed in the impaling process. A successful installation of this type depends upon careful supervision and faultless installation procedures. Should the proper degree of supercompression not be attained, shrinkage of the blanket would open the joints and expose the mineral wool block to direct furnace temperature, causing shrinkage of the mineral wool block.

Construction at and around burners has received great attention. Some years ago, designers felt that ceramic fiber lining construction could be applied only in radiant tube fired furnaces. It has since become clear that the lining is applicable to any direct fired unit. Installations now employ many types of burners, including extremely long

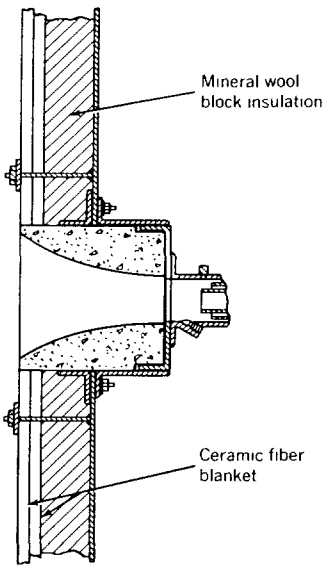

Fig. 6 Method of supporting burners and typical design around them.

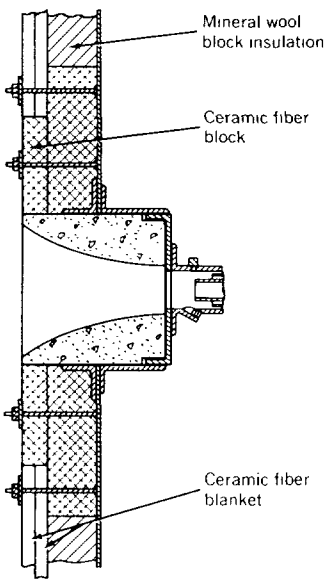

Fig. 7 Ceramic fiber block around burners for high velocity conditions.

flame types in billet heating furnaces (illustrated in Fig. 5), the popular flat flame furnaces and the baffle type burners sometimes used in annealing covers.

Should the length of the desired burner block not correspond to the lining thickness, the burner and block must be moved back from the shell. This can be done in many ways: A shelf can support the burner block and/or provide a place to attach the burner plate. Whichever method is chosen, support from the furnace shell must be provided for the burner block, since a fibrous lining cannot give support comparable to that of a firebrick lining.

Fig. 6 illustrates the simplest ceramic fiber blanket lining construction around burners. The lining is brought to the edge of the refractory burner block and butt-jointed at that point. While many installations of this type do exist, some designers discredit the approach since shrinkage in the blanket and/or the block would open a path for direct radiation to the furnace shell. A variation is to utilize ceramic fiber block as the back-up insulation in the immediate area around the burner. Ceramic fiber block is highly refractory and has less shrinkage at elevated temperatures than ceramic fiber blanket. If the hot face blanket shrinks away from the burner block, the ceramic fiber block prevents radiant heat damage to the shell.

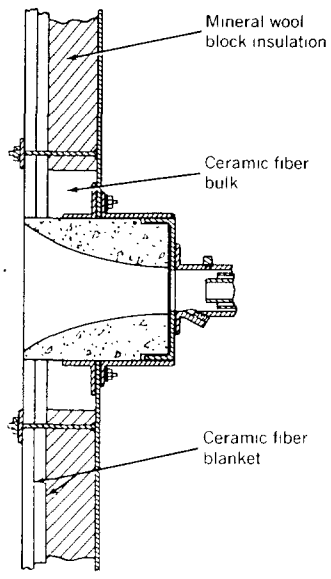

Fig. 8 A design to cover 90 percent of all requirements.

Combustion velocities in the majority of furnaces are not sufficiently high to deteriorate ceramic fiber blanket. Should this occur (Fig. 7) ceramic fiber block insulation is utilized for the full lining thickness, putting the highly refractory block against the burner block and exposing it to the high combustion velocities around the burner. Another approach is to saturate the ceramic fiber blanket around the burner areas with a rigidizing solution, which will dry to a hard surface while allowing the blanket interior to remain resilient.

Ceramic fiber blanket with a density of 8 lb per cubic foot has exhibited a considerable degree of resistance to all combustion velocities. The design in Fig. 8 will satisfy the requirements of over 90 percent of all furnace design conditions. In this installation the mineral wool block is brought to within one or two inches of the burner block. Ceramic fiber bulk is then packed around the burner block and the ceramic fiber blanket butt-jointed at the block. This completely surrounds the burner block with highly refractory ceramic fiber, helping to relieve internal thermally caused stress concentrations. Special materials are not required by this design and ceramic fiber bulk, blanket and mineral wool block insulation are available from stock.

Advantages to a specific furnace design.

The greatest benefits from use of ceramic fiber linings have been to furnaces used for the stress relieving of automotive strip steel. Commonly known as annealing covers, these furnaces (illustrated in Fig. 9) encounter considerable mechanical shock, aggravated thermal shock and continuous cyclic operation. They are ideal for a ceramic fiber lining.

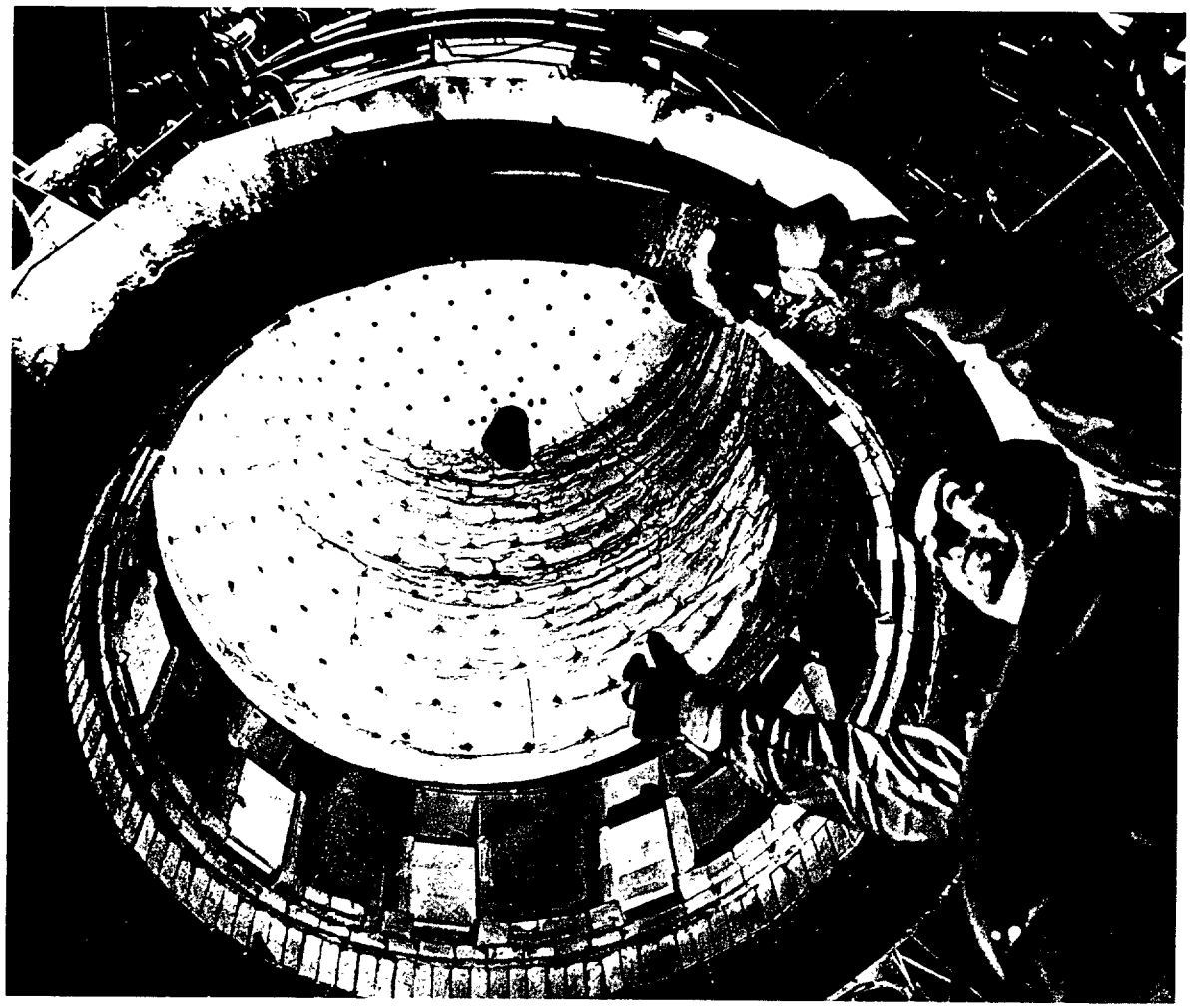

Fig. 9 Single stack annealing furnace is lowered to position.

Particulars of the furnace are:

- Annealing covers are either round as in Fig. 9 or rectangular, depending on the number of bases being covered. The designs are highly standardized and great numbers of these furnaces exist. The ceramic fiber lining design applies to either furnace, and both direct-fired and radiant-tube-fired units use it. The design shown in Fig. 9 uses insulating firebrick at the bottom of the furnace to create a shelf where the baffle for the burner is installed. With other burner designs, this insulating firebrick would not be required.
- A protective atmosphere, primarily hydrogen, is used around the strip steel coils being heated to prevent oxidation during annealing. This atmosphere is contained by an alloy steel inner cover which helps prevent contact between the reducing atmosphere and the refractory lining of the outer cover.

Examination of several specific properties of the ceramic fiber blanket lining technique shows its design and operating benefits. A very high resistance to heat flow is provided by the fibrous lining's low thermal conductivity. This is shown by a common annealing furnace wall (illustrated in Fig. 10) with a design temperature of 1650 F. A typical construction using insulating firebrick would be nine in. of 2000 F IFB with one in. of mineral wool block back-up insulation as shown. This combination represents the current practice of a majority of furnace builders.

A common fibrous lining would be 1½ in. of eight lb/cu ft blanket and 3½ in. of mineral wool block insulation. Though enough fibrous insulation could be put in the lining to bring the furnace shell temperature down to that achieved by insulating firebrick, this has not been done because many designers believe that 180 F is adequate. These furnaces require lower furnace shell temperatures than other types because they are located indoors.

A major benefit derived from fibrous lining is the reduction of five in. in lining thickness or ten in. overall on the diameter. The designer can utilize this space to increase the number of furnaces on the floor or to increase the annular space between the inside of the lining and the outside of the inner cover for greater ease of moving the annealing cover.

The lightweight of the fibrous lining is helpful in several ways. Heat storage is reduced by 75 percent of that experienced with the equivalent IFB lining. Some covers are operated with the outer cover remaining on the coils during the entire heating and cooling cycle. Operators doing this have reported a 30 percent decrease in cycle time because less heat is required to bring the units up to temperature, and also less heat must be dissipated by the lining while it is coming down in temperature.

The covers are more commonly operated by transferring the hot outer cover to a cold stack of coils. The fibrous lining's resistance to thermal shocking pays off in this type of operation. Insufficient life period has been experienced with fibrous linings in this service to assign specific numbers to the savings that result from their thermal shock resistance. However, more conventional refractory linings clearly deteriorate faster under these conditions than the fibrous linings.

Coupled with resiliency, the lightweight of fibrous linings is an advantage in the design of outer covers. The steelwork can be lighter and not absolutely stiff, as it must be with conventional linings, because movement of the outer cover will not damage the lining. (A typical single-stack annealing cover would weigh 8900 lb less than it would if lined with IFB and lighter still if the weight of steelwork were reduced.) The cover can withstand the mechanical shock from being placed on the furnace base or from striking objects during transit by the crane because of the fibrous lining's structural integrity.

Ceramic fiber lining is best described as insulation, even though it operates at refractory use temperatures. Since it is insulation, it is easily and readily repaired. Should some of the studs be damaged, new ones can be hand welded or welded with plant stud-welding equipment prior to impaling new blanket and block. Maintenance can be started on fibrous-lined furnaces sooner than on conventionally-lined furnaces because the fibrous lining's

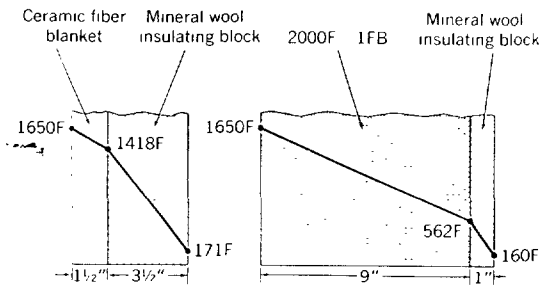

Fig. 10 Fibrous lining reduces furnace wall thickness by 50 percent and heat storage by 75 percent compared to conventional annealing cover design.

	Material	Installation	Total Installed Cost
Fibrous Lining 1½" Ceramic Fiber Blanket 3½" Mineral Wool Block All anchoring materials included	$3.87	$2.23	$6.10
IFB Lining—Round Outer Cover 9" 2000 F Insulating Firebrick 1" Mineral Wool Block No anchoring required	$4.07	$3.92	$7.99
IFB Lining—Rectangular Outer Cover 9" 2000 F Insulating Firebrick 1" Mineral Wool Block Wall anchoring included	$4.63	$4.22	$8.85

Tabulation 1 Comparison in $/sq ft of wall area for cost of linings for coil annealing furnaces.

low heat storage results in quick cooling. After maintenance, the furnace can be immediately returned to full operational service because neither dry-out nor thermal conditioning is required.

Specific numbers can be assigned to the important benefit of lower installed cost. Tabulation 1 shows the savings in material and installation costs that result from use of a fibrous lining. The cost varies, depending on whether a round single stack hood or a rectangular hood for annealing multiple stacks is being considered. Insulating firebrick in a round cover does not require anchoring while a rectangular cover requires IFB anchoring, which adds additional costs.

The tabulation figures apply specifically to furnace wall areas. The material prices were based on ordering material for several covers at a location in Pennsylvania. Installation costs were supplied by a contractor who is familiar with the installation of both fibrous and conventional linings. Compared to a conventional lining, there was a cost savings with the fibrous lining of more than $1,060 for a particular single-stack cylindrical cover, which had 560 sq ft of lining area.

The future.

Ceramic fiber blanket linings can be used up to 2250 F by using the installation techniques described in this paper. Several methods of extending this temperature range to 2500 F are under study. These higher temperatures are of direct interest to ferrous and nonferrous industries and to the various industries firing ceramic ware.

In one design, no metallic fasteners are exposed to the furnace atmosphere and temperature. Another technique will use second generation fibers with higher temperature use limits. While several of these designs are close to being commercially acceptable, few installations have been made.

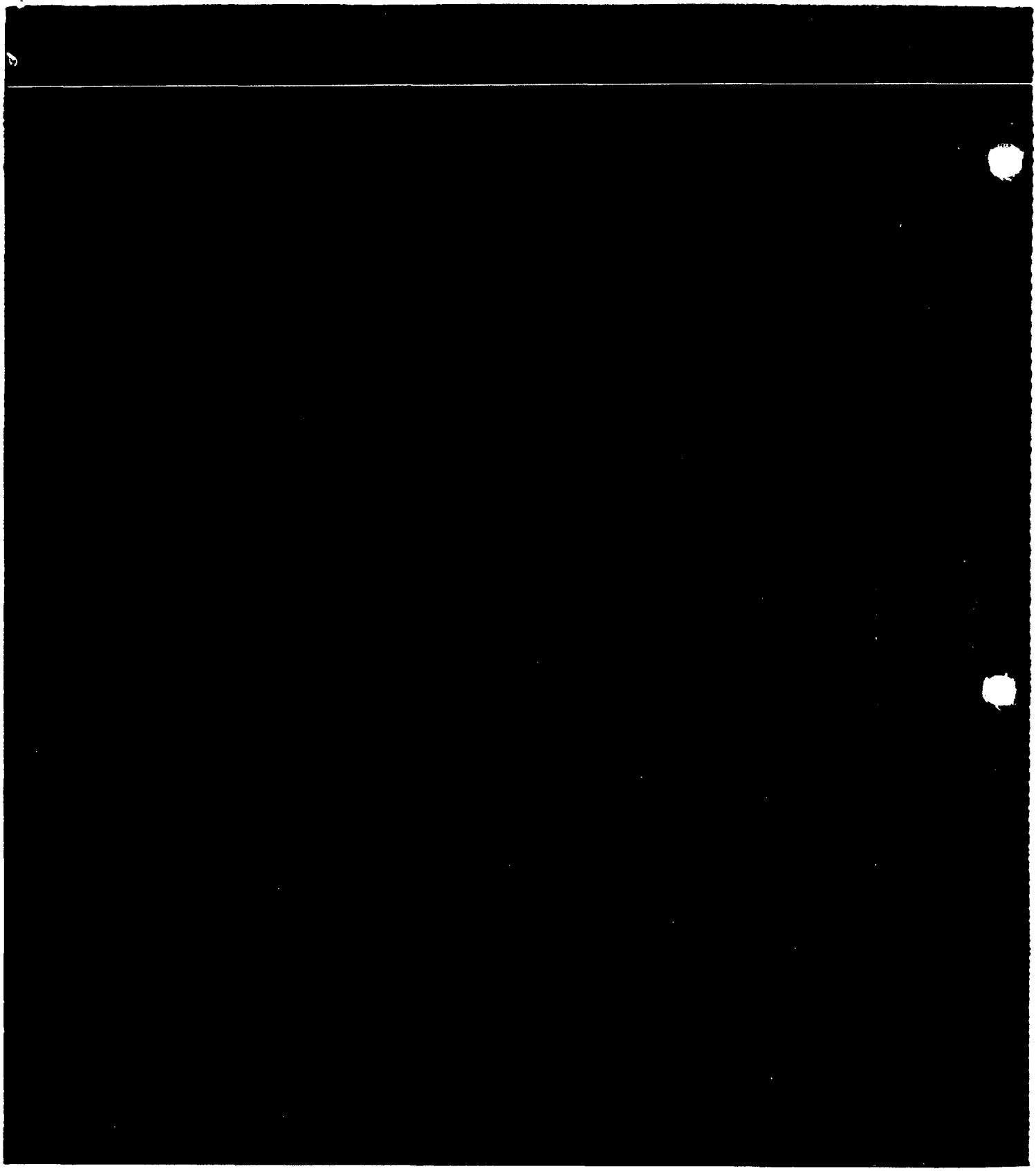

For more information contact your nearest B&W sales office or The Babcock & Wilcox Company, Refractories Division, Augusta, Georgia

Atlanta, Ga. 30328 . . .5775-A Glenridge Drive, N.E. 256-4950
Augusta, Ga. 30903 . . . . . .1288 Merry St. . .738-4574
Buffalo, N.Y. 14225. . . . . .132 Cayuga Road. .633-2800
Chicago, Ill. 60603. . . . . .29 So. LaSalle St. . . .236-6546
Clarksville, Ind. 47130. . . . . .813 Eastern Blvd. . .282-6691
Cleveland, Ohio 44113. . . . . .1367 Illuminating Bldg. . .781-4381
Detroit (Sthfld), Mich. 48075. . .510 Northland Twrs. E. . 353-6440
Houston, Texas 77018. . . . . .P.O. Box 94110. .861-9161
La Mirada, Cal. 90638 . . . . . .15701 Heron Ave. . .521-6911
New York, N.Y. 10017. . . . . .161 East 42nd St. . .687-6700
Philadelphia, Pa. 19102. . .3 Penn Cntr. Plz., Rm. 1126. .564-6376
Pittsburgh, Pa. 15237. . . . . .7805 McKnight Road. .931-4490
Portland, Oregon 97201. . . . . .1600 Fourth Ave. S.W. . .228-0410
San Francisco, Cal. 94111. . . . . .One California St. . .421-3484
Seattle, Wash. 98104. . . . . .305 Norton Bldg. . .622-1.
Tulsa, Oklahoma 74135. .5200 S. Yale Ave., Suite 501. .663-24..
Canada: Babcock & Wilcox Refractories Limited
A subsidiary of The Babcock & Wilcox Company
Burlington, Ontario and Montreal, Quebec

Ref. 1356 5M 6-72 Litho in U.S.A.