PLAINTIFF'S EXHIBIT
CAP-1393

ASBESTOS BULLETIN

Vol. 20 No. 4

July–August 1979

Editor: Dr. C. Z. Carroll-Porczynski

CONTENTS

	Page
Part 1. ASBESTOS MINING	80
Part 2. ASBESTOS CEMENT	84
Part 3. ASBESTOS TEXTILES	89
Part 4. ASBESTOS FRICTION MATERIALS	90
Part 5. ASBESTOS REINFORCED PLASTICS	91
Part 6. BUILDING MATERIALS	92
Part 7. ASBESTOS PACKING, SEALING AND COATING COMPOSITIONS	93
Part 8. ASBESTOS PAPER AND INSULATING MATERIALS	93
Part 9. REFRACTORY FIBRES	93
Part 10. COMPANY NEWS, TENDERS	94
Part 11. ASBESTOS HEALTH HAZARDS AND PRECAUTIONS	96
Part 12. REVIEW OF JOURNALS	98

© Copyright Astex Publishing Co., 1979

256. *Quebec approves Asbestos proposal.*
Financial Times, June 7, 1979.

After weeks of heated debate, the National Assembly in Quebec City has given a second reading and passage to legislation empowering the Government to expropriate Asbestos Corporation's Quebec assets. The vote was 52 to 30 and both Union Nationale and Liberal Parties voted against. The Bill now goes to committee for clause by clause study and requires a third reading before it becomes law.

Asbestos Corporation is the second largest producer of asbestos in Quebec and Canada and is 54·6 per cent owned by General Dynamics of the U.S. The Government is still negotiating with General Dynamics for the acquisition of its controlling block and there is no evidence yet that agreement is near. Premier Levesque has said the Government will give General Dynamics until the year end to make an agreement for the Government take-over but if agreement is not possible he will use the expropriation legislation.

257. Asbestos Corporation files suit in Quebec.
Financial Times, June 23, 1979.

Asbestos Corporation is taking legal action to fight the threat of expropriation of its Quebec assets by the Provincial Government.

The step came swiftly after the Quebec National Assembly finally passed the Government's legislation for expropriation of Asbestos Corporation, a weapon which the Government says will be used if it cannot successfully negotiate a takeover of control from the American shipbuilding and aircraft group, General Dynamics. The U.S. company owns 54·6 per cent of Asbestos Corporation which is the second largest fibre producer in Canada and Quebec.

Asbestos Corporation filed a request for an injunction in Quebec Superior Court in Montreal yesterday. Its lawyers asked the court to annul the expropriation legislation on the grounds that it is unconstitutional and beyond the legislative power of the National Assembly.

The lawyers for Asbestos Corporation asked the court to issue an interlocutory injunction to stop any expropriation move pending determination by the court on the constitutionality issue.

258. Asbestos loses appeal on State takeover.
Financial Times, July 31, 1979.

Montreal – Asbestos Corporation has lost a bid for a temporary injunction to block its possible expropriation by the Quebec government.

Justice Albert Mayrand of the Quebec Court of Appeals refused the injunction, citing a legal requirement that three judges preside in such a case.

Asbestos Corporation which is 54·6 per cent owned by General Dynamics, lost its bid for a permanent injunction in Superior Court last week.

It appealed to Justice Mayrand while the Full Appeals Court is adjourned for the summer. The company has said it will appeal to the Full Appeals Court when the court resumes deliberations in September.

Quebec has threatened to expropriate Asbestos Corporation if it cannot reach agreement with General Dynamics on terms of a takeover.

259. Asbestos Saga.
Industrial Minerals. No. 139, April 1979, p.11.

Asbestos Corporation's fourth quarter 1978 sales were $45·6 m., the highest in recent years and an increase over other 1978 quarters ($28·8 m. in the first, $33·9 m. in the second and $38·6 m. in the third). The company commented that its forecast of a strong asbestos cement grade fibre demand was proving to be the case.

260. Asbestos Fibre Fabrication.
World of Minerals. No.141, June 1979, pp 9–10.

Societe Nationale de l'Amiante (SNA), the Quebec government's asbestos arm, recently announced details of some of their projects designed to utilise more of the province's vast asbestos resources. LUPEL recently started up a pilot factory to produce a linoleum containing 85% asbestos. The project – which includes expertise from the government, Cascade Paper, and Domco Industries – is based on using a converted paper machine previously owned by Consolidated Bathurst. Dow Chemicals is to provide the latex. If the feasibility is proved, then a four meter wide product would be manufactured with sales possibilities in the USA and Europe. SNA is also collaborating with Canadian Distex to market brake linings and clutch equipment in North America. SNA intends to increase sales of these products that have had severe setbacks recently due to a slump in vehicle production and environmental questions. However the co-operation is designed to implement one of the recommendations put forward in the Sore's Report.

261. Waste Utilisation.

SNA claims that a technique developed by a research team under the leadership of Prof. Jean-Marc Lalancette at Sherbrook University, Quebec, will make Quebec a leading producer of magnesium compounds. Work began in 1976 on the utilisation of the waste from asbestos tailings and the last year progress has been such that a pilot plant is now extracting magnesium in the form of oxide, hydroxide, carbonate and sulphate from the waste. SNA is now constructing Magnag – 1 at Thetford Mines, a prototype production facility designed to have an annual capacity of 5,000 tons of magnesium compounds. Start up is to be early next year.

262. Quebec's Mining Budget.
World of Minerals. No.141, June 1979, pp. 9–10.

Quebec's Minister of National Resources, Yves Berube, recently announced the 1979/80 budget for the mining

ASARCO ALV 0006825

sector of the Ministry of National Resources. The total is C$34, 227,700, an increase of 4·5% over the previous year.

Around C$765,000 has been allocated to the Bureau del'Amiente to pursue the discussions with industry, particularly with a view to increasing the amount of asbestos fibre processed in the province.

263. Refinancing United Asbestos.
World of Minerals. No.140, May 1979, p.9.

Talks are taking place to enable United Asbestos Inc.'s Chrysotile Asbestos mine at Lloyd Lake, Midlothian Township, Ontario, to be refinanced. The mine, which produced around 100,000 short tpa of fibre, has been on care and maintenance since financial problems forced its closure. Several interested parties are involved in discussions to refinance the operation, clean up the deferred debt, and take control of the assets. Work is also in hand to improve the flowsheet and smooth out some technical aspects of the operation. The Company is hopeful that the mine will be operational in the foreseeable future.

264. CANADIAN ASBESTOS SHIPMENTS IN APRIL 1979
Statistics Canada

	M. tonne	Value $000	Cumulative M. tonne	$000
Asbestos Milled Fibres, Group 3 GR.				
United Kingdom	541	651	2,087	2,477
Germany West			606	707
Italy			68	80
Spain			45	80
Bulgaria	936	1,064	936	1,064
Czechoslovakia	240	256	473	506
Yugoslavia			2	2
Israel			25	28
Turkey			54	59
India			747	780
Pakistan			91	93
People R China	232	384	232	384
Japan	148	182	277	331
Korea, South	18	21	45	46
Taiwan			15	14
Argentina			59	78
Brazil	45	68	449	576
Venezuela			136	158
Mexico	18	19	118	126
United States	517	682	2,634	3,197
Total	2,695	3,326	9,099	10,787
Asbestos Milled Fibres, Group 4 & 5				
	tonne		tonne	
United Kingdom	2,992	2,145	12,697	9,009
Ireland	90	67	498	385
Austria	91	69	271	201
Belgium – Luxemb	18	13	2,487	1,364
Denmark	696	363	1,100	561
France	2,096	1,307	9,619	5,932
Germany West	1,888	1,254	10,433	7,011
Greece			1,726	1,251
Italy	2,693	2,166	7,636	5,808
Netherlands	689	470	2,301	1,502
Portugal			450	286
Spain	1,850	1,275	7,441	5,151
Switzerland			1,179	738
Bulgaria	512	416	512	416
Czechoslovakia	100	76	118	88
Germany East			2,923	1,952
Poland	337	274	1,578	1,283
Romania	1,500	1,240	3,078	2,371
Yugoslavia	389	318	2,355	1,852
Iran			181	91
Iraq			352	159
Israel			414	257

ASARCO ALV 0006826

	M. tonne	Value $000	Cumulative M. tonne	$000
Asbestos Milled Fibres, Group 4 & 5 *(Cont)*				
Kuwait			503	323
Egyptian A. R.			456	293
Nigeria			907	477
Angola			272	165
Morocco	124	101	288	241
Senegal			181	110
India	454	340	9,235	6,194
Malaysia	1,790	1,213	5,283	3,494
Pakistan			729	396
Singapore	218	165	327	247
Burma	218	116	218	116
Indonesia	196	97	1,652	918
Japan	2,269	1,264	10,122	5,548
Korea, South	1,079	551	3,519	1,782
Philippines			352	193
Taiwan	73	36	1,137	592
Thailand	593	441	2,823	1,756
Austria	1,049	777	4,579	2,677
New Zealand	573	350	2,334	1,479
Argentina			963	606
Brazil	67	42	3,517	1,837
Chile	227	146	590	397
Colombia	5,492	2,983	6,535	3,666
Ecuador	180	114	1,156	693
Paraguay			23	11
Peru	146	97	640	411
Uruguay			5	2
Venezuela	399	258	1,207	830
Jamaica			91	59
Costa Rica	83	52	146	91
El Salvador			327	166
Guatemala	181	94	181	94
Honaduras			501	281
Mexico	2,413	1,734	9,917	6,963
Panama	135	81	189	119
United States	8,231	5,623	40,991	27,021
Total	42,131	28,129	181,245	17,918

Asbestos Shorts, Group 6-9 Grades	tonne		tonne	
United Kingdom	3,920	832	16,611	3,306
Ireland			34	13
Austria			129	16
Belgium – Luxemb	594	140	3,095	750
Denmark	18	6	370	104
Finland			89	9
France	1,188	286	4,076	799
Germany West	2,314	408	10,655	2,071
Greece			172	17
Italy	271	68	632	116
Netherlands	726	152	5,713	1,158
Portugal			786	158
Spain	928	286	2,665	683
Sweden	36	13	73	24
Switzerland	200	50	828	186
Czechoslovakia	285	104	389	142
Israel			243	65
Syria	17	2	17	2
Turkey			45	6
Kenya			169	18
Nigeria			212	21
South Africa			5	2

ASARCO ALV 0006827

	M. tonne	Value $000	Cumulative M. tonne	$000
Asbestos Shorts, Group 6-9 Grades *(Cont)*				
Angola			272	59
India			2,631	808
Malaysia			182	53
Singapore			36	4
Burma	73	16	73	16
Indonesia	54	20	372	89
Japan	6,773	1,908	27,064	6,722
Korea, South	54	20	1,116	390
Philippines	36	8	321	84
Taiwan	200	67	1,512	440
Thailand	461	114	2,251	721
Australia	64	11	340	48
New Zealand			93	13
Argentina	135	36	3,126	597
Bolivia			54	12
Brazil	1,006	338	6,574	1,598
Chile			347	44
Columbia	949	183	1,717	311
Ecuador	180	41	865	250
Peru	52	5	434	89
Uruguay			334	101
Venezuela	887	128	2,078	307
Belize			49	10
Trinidad – Tobago			36	4
Costa Rica	18	5	18	5
Dominican Rep			104	14
El Salvador			337	95
Guatemala	91	33	91	33
Mexico	429	113	3,012	709
Panama	44	16	44	16
Puerto Rico	206	28	373	49
United States	32,660	5,909	154,062	27,820
Total	54,869	11,347	256,926	51,175

AFRICA

265. Cape Industries sells mines
Financial Times June 30, 1979

Cape Industries yesterday signalled what it called "a major change of direction" with the completion of its sale to Transvaal Consolidated Land and Exploration of two South African asbestos mines for a net £15.1m in cash.

The sale follows Cape's conclusion that the mines were becoming isolated both commercially and geographically from the rest of the group's UK business in building materials and engineering, and that management of them could prove a problem in the future. Profits from this mining division had reached £10m in 1976 but were not expected to match this level again.

With extra funds available, Cape sees the building and insulation field as the best prospect for expansion – it already has the country's largest cavity wall insulation business.

"There has been a very rapid growth in the supply of insulation materials in recent years as the cost of energy has increased," said Mr. G. A. Higham, the chief executive.

Although the group has not settled future dividend policy, it concedes that, with the withdrawal of dividend restraint, it has "some scope for a fairly significant increase." In 1978, the group's pre-tax profits were £12.7m, to which mining contributed £3.5m. Dividends were 9.2443p a share.

AUSTRALIA

266. Help for Woodsreef?
Mining Journal, Vol. 293, No. 7509, July 20, 1979, p.47.

Woodsreef Mines, the Australian asbestos producer, expects the Australian Government to extend it further funds for the development of its wet processing technology. Having made a grant of 50% of the costs of R & D, the government may make similar provision in respect of the construction and operating costs of a pilot wet mill. Meanwhile Woodsreef's Canadian parent, Woodsreef Minerals, has agreed to earn up to 90% of the Australian company's interest in the process, reports the Financial Times.

USSR

267. Production from the Kyembay asbestos mine in USSR is expected to begin within the next two months. The project is being developed by seven Comecon

ASARCO ALV 0006828

countries and the 250,000 tpa production will be divided between them.

JAPAN

268. Japanese Asbestos Imports 1978.
Industrial Minerals, No.140, May 1979, p.58.

Figures in metric tons

	1978	1977
Canada	111,000	119,551
South Africa	80,873	82,181
USSR	17,811	71,109
Australia	7,346	9,503
USA	11,784	9,247
	234,901	300,636

EUROPE

269. UK 1978 Mineral Imports.
Industrial Minerals No.139, April 1979, p.54.
Asbestos:

Figures in metric tons

	1978	1977
Canada	88,037	87,830
South Africa	21,203	13,941
Cyprus	5,399	7,810
Italy	1,281	1,027
Swaziland	480	14,932
Total	117,781	127,214

270. West German Strategic Stockpiles.
Mining Journal Vol.292, No.7506, June 29, 1979, p.503.

The West German Government has finally decided to set up a permanent reserve of five strategic materials – chromium, cobalt, manganese, vanadium and blue asbestos – on a contractual basis with industrial users (MJ, April 27, p.139). The government and industry sectors concerned agreed that stocks of the five materials should be raised to cover one year's requirements from current levels which are sufficient, on average, for four months. The cost of purchasing the extra material to set up the reserve is provisionally put at DM 600 million. Bundesbank indicated at the beginning of May that it would be willing to put up this amount to finance the purchasing, which is likely to take between two and three years.

PART 2: ASBESTOS CEMENT

271. Study of the Functioning of the Water-Circulation Systems in Asbestos Cement Factories.
L. V. Medvedeva, L. S. Grishina, O. I. Gracheva, V. A. Komarov, G. N. Vasetski, A. P. Pilipenko and R. A. Ivanova.

Introduction of a closed cycle of the recuperation of the technical water in asbestos-cement factories permits the recovery of a considerable quantity of the materials removed from the recuperator by blowing. The purity of the effluents and, hence, of the open reservoirs is improved. This, however, in a number of cases, is accompanied by some lowering of the productivity of the sheet-forming machines and by increased fissuring tendency of asbestos-cement sheets (1). Previous studies (2,3) produced some explanation of this ill-effect, but no definite conclusions have been reached.

Since 1972, a closed cycle of water recuperation in the recuperator-sedimentation tank-recuperator system has been operated at the Kharkov factory, of insulating materials and asbestos-cement articles, and at the Alekseev factory, of asbestos-cement articles. In order to evaluate the quality of the technological waters in these factories, we preliminary carried out laboratory experiments in the saturation of distilled water with ions passing into the solution from the Alekseev and the Balaklei cements (the latter is used by the Kharkov factory). These experiments were carried out in a

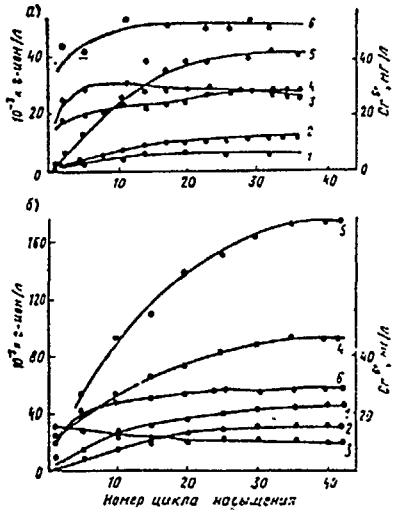

Fig.1. Saturation of distilled water with ions from (a) Alekseev and (b) Balaklei cements; 1–Cr^{6+}, 2–Na^{+}, 3–Ca^{2+}, 4–SU_4^{2-}, 5–K^{+}, 6–OH^{-}. Ordinates: 10^{-3} g–ion/l (on the left) and Cr^{6+} mg/l (on the right); abscissa: number of saturation cycles.

ASARCO ALV 0006829

manner simulating the industrial conditions of the saturation of the liquid phase with ions issuing from the cement into the solution.

Kinetic curves of the ion saturation of the solution from the Alekseev and Balaklei cements are shown in Fig. 1. The ion concentration in the solution depends mainly on the chemical and mineralogical composition of the cements (4).

Laboratory experiments on the accumulation of ions in the liquid phase of cement suspensions have shown that in the case of the Alekseev cement the saturation concentration of the ions (i.e. the concentration in equilibrium with the cement) is low. Under the same conditions, the concentration of salts in the liquid phase of the Balaklei cement suspension is considerably higher. The results of these experiments indicate that this low salt concentration in the technological water permits the successful operation of a closed cycle of water recuperation at the Alekseev factory.

Because of the higher salt concentration in the suspensions of the Balaklei cement, the problem of a completely closed cycle of the water recuperation at the Kharkov factory can possibly be solved by more experiments (for the time being, some fresh water is added at this factory).

Our industrial investigations included the examination of the water-recuperation system, the chemical analysis of the technological water and cement, the control of the work parameters of sheet-forming machines, their productivity and the quality of the products.

Figure 2 shows the scheme of the Kharkov water-recycling system. The Alekseev factory has practically the same system. The difference consists only in the spatial disposition of the six sections where the suspended substances settle from the technological water. At the Kharkov factory, the water from the mains is fed into the clean recuperator and the sedimentation tank. It should be pointed out that, at both the factories, the

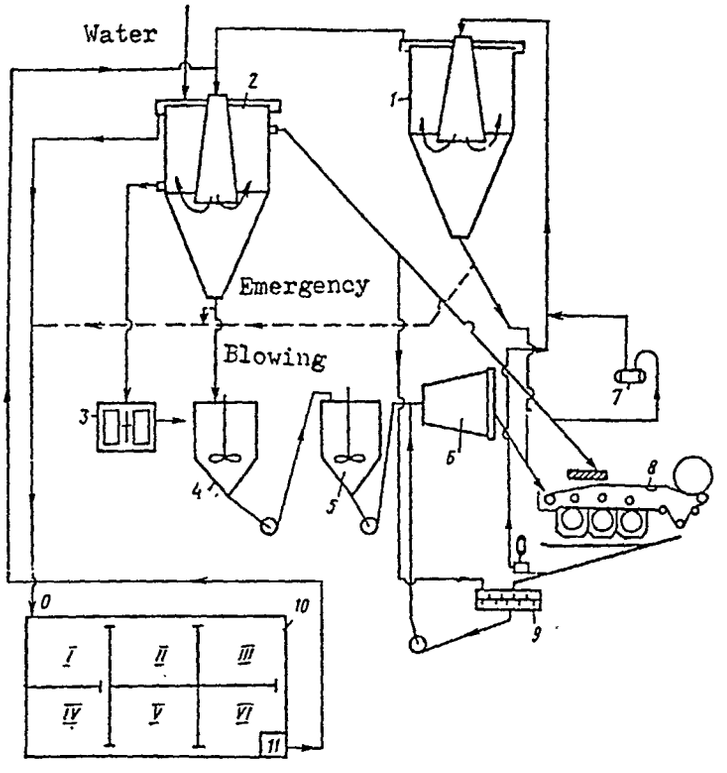

Fig. 2. Scheme of the water-circulation system at the Kharkov factory of asbestos-cement articles, 1,2 – recuperators of contaminated and pure water; 3–beaters, 4–hydrofluffing machine, 5–mixer; 6–drum mixer; 7–vacuum pump; 8–sheet-forming machine, 9–effluents mixer; 10–sedimentation tank; 11–pump station.

ASARCO ALV 0006830

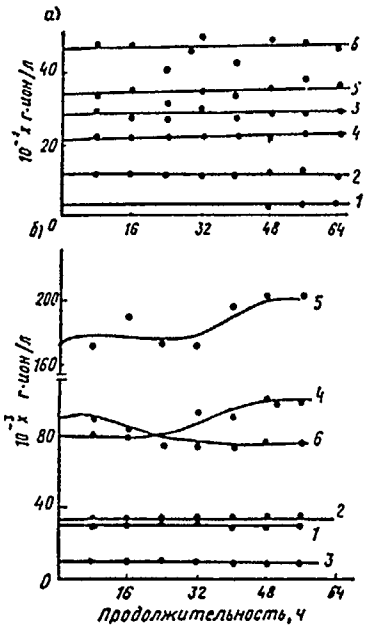

Fig.3. Ion concentration in the technical water in recuperators of (a) Alekseev and (b) Kharkov factory; 1–Cr^{6+}, 2–Na^{+}, 3–Ca^{2+}, 4–SO_4^{-2}, 5–K^{+}, 6–OH^{-}. Ordinates: 10^{-3} g.–ion/l; abscissa: time, in hours.

vacuum pumps deal with classified technological water. Both schemes represent in fact closed cycles of the recuperation of technological waters.

For the chemical analysis, we used water samples from the hydro-fluffing machine, the recuperator, the drum mixer and the sedimentation tank. The ion concentration in the water from the hydro-fluffing machine and the mixer is the same as in the recuperator (within the limits of the experimental error of 5 – 10%). Comparison of the analytical results obtained at the laboratory and under the industrial conditions have shown their concordance within the experimental error limits (Fig. 3). The water leaving the sedimentation tanks had a lower salt concentration than at the entrance.

Since the sedimentation tank is situated outside the factory building, the temperature of the water decreases when it passes from one section to the other. In the 1 – 6 section of the Kharkov sedimentation tank at an ambient temperature of 18° C, the water temperature decreased from 34 to 28° C. The temperature in the fourth section, from which the water is returned to the factory is approximately 7° lower than the temperature of water entering the sedimentation tank (i.e. 34° C.).

Taking into account the earlier investigations (5), it can be assumed that, as a result of the temperature lowering, salt crystallization from the supersaturated solution takes place in the sedimentation tank, whereby the concentration of some ions in the water returned to the factory is reduced. Moreover, as a result of the contact with the atmosphere, carbonation of calcium hydroxide takes place, so that the concentration of Ca^{2+} and OH^{-} ions is decreased. The presence of calcium carbonate in the sediment was confirmed by the X–ray analysis.

The same processes occur in the sedimentation tank at the Alekseev factory, although water from the mains is periodically introduced in it. The reduction of the ion concentration in the water returned from the sedimentation tank to the factory has a beneficial effect on the technology of the formation of the asbestos-cement articles.

Comparison of the technical and economical indices of the two factories, shown in Table 1 indicates that the productivity of the Alekseev sheet-forming machines is lower by more than 20% than at the Kharkov factory (whilst the quality of the products is practically equal). This is caused by the poorer quality of the Alekseev cement, which in a number of cases, falls short of the requirements of GOST 9835–66.

Thus, our investigation indicated that the use, during a long time, of the water circulation system according to the recuperator-sedimentation tank-recuperator scheme permitted the Alekseev and the Kharkov asbestos-cement factories to achieve a high productivity of the sheet-forming machines and to produce articles conforming with the standard requirements. The temporarily slightly poorer productivity of the Alekseev factory, compared with the Kharkov factory, can be increased by about 20%, if the quality of the cement is improved.

The positive results of our investigation should be taken into consideration by all the cement-using industries, and cements should be used having advantageous chemical composition as determined by this study.

References

1. S. A. Grazhdanskii and K. M. Kinstler. Stroit Mater. 1970, No.1, 5.

Table 1

Factory	Degree of asbestos fluffing, in %		Moisture content in asbestos-cement, %		Moisture content of sheet, %	Hourly production sheets	Bending strength kg/cm²	Density g/cm³
	in beaters	in hollander	before suction	after suction				
Kharkov.	31	78	41	32	21	5500	175	1.77
Alekseev.	30	83	48	35	23	4150	170	1.6

ASARCO ALV 0006831

2. T. M. Berkovich and V. M. Mikhelson. Stroit. Mater. 1974, No. 3, 34.
3. T. M. Berkovich, O. I. Gracheva and L. T. Berkovich, Trudy NIIasbesttsement, 1977, No.34.
4. I. I. Kurbatova. Trudy NIIZh Ba, 1972, No. 7, 48.
5. V. B. Kogan and S. K. Gorodnikov, 'Spravochnik po rastvorimosty' (Solubility Handbook) Moscow, 'Navka', 1970 TT. 1–3.

272. Japanese Patent No. 78 64,222. Composite Pipes. Asaki Asbestos Company.

Asbestos cement layers are wound around plastic pipes. Then powdered asbestos slate or calcium silicate and water are scattered onto the asbestos cement layer to prevent cracking during the subsequent curing. The asbestos cement sheathing thus formed protects the plastic pipe against fire.

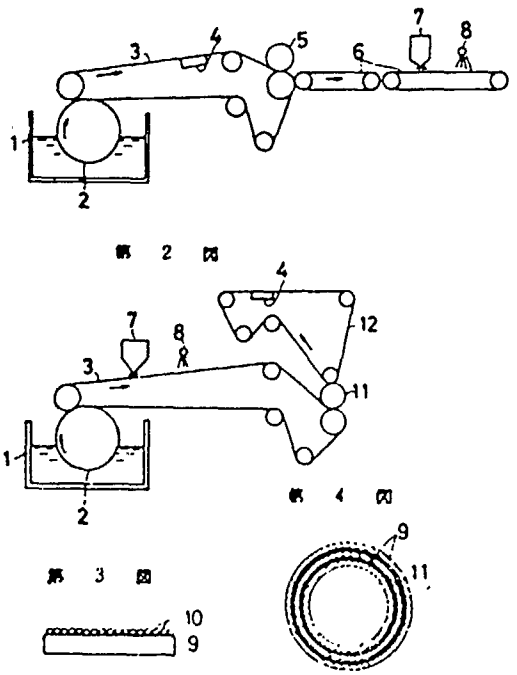

273. Microstructure and Mechanical Properties of Fibre-Reinforced Cement Materials.
R. S. Mikhail et al. Cements, 1978, 75 (3), 277-284 (in English).

The effect of reinforcement of cement with asbestos, glass fibres and polymer-coated glass fibres was studied. The fibres decreased the hydration degree and the specific surface area of the hydrates, and increased the porosity of the product. Higher bending strength was obtained at the expense of the compression strength. The nature of the fibres and their bonds with cement greatly affects the properties of the reinforced material.

274. US Patent. 4 066 723. Method and Apparatus for Making Fibrous Concrete.
Caterpillar Tractor Co, USA.

Sheet-like, fibre reinforced concrete of a desired thickness is produced by extruding a concrete sheet, distributing form above staple, reinforcing fibres and further extruding another concrete sheet on top of the fibres. The concrete and fibres are stacked in this way until the required thickness is obtained.

275. US Patent. 4 077 577. Non-Stressed, High Strength, Cement-Containing Pipe and its Production.
Cement Asbestos Products Company. USA.

A method for producing an asbestos-cement pipe (well adapted for conveying water under pressure) which contains a continuous filament of an aromatic polyamide fibre is described.

276. Asbestos Cement Pipes in Aggressive Media — Ceocor Study.
(Comité pour l'Europe Occidentale de la Corrosion et de la Protection des Conduites). GWF Gas-Wasserfach : Wasser/Abwasser, 1979, 120 (2), 62-68 (in German).

A survey is presented of the corrosion of asbestos cement pipes in soil, on the corrosion mechanism and corroding substances, and the prevention of corrosion: 7 references.

277. Scanning and Transmission Electron Microscopy of New and Used Asbestos Cement Pipes Used in Water Supply Systems.
M. Mah and E. S. Boatman. Scanning Electron Microscopy, 1978, (1) 85–92.

Scanning electron microscopy (SEM) was used to observe the interior surfaces of asbestos-cement pipes and to record the energy dispersive x-ray spectra. Transmission Electron Microscopy (TEM) was used to estimate the number of asbestos fibres released from the surface of asbestos-cement in the presence or absence of corrosion inhibitors.

278. The Development of the Production of Large Pressed Flat Asbestos Cement Sheets.
Yu. N. Sheldakov et al. Stroit. Mater., 1979, No. 4, 15–16.

The first in the USSR line for the production of pressed flat asbestos-cement sheets of large dimensions has been recently put in operation at the Kiev asbestos-cement combine. The sheets have a length of 3600 mm., width 1500 mm. and thickness 6–10 mm. The ratio of asbestos grades III, IV and V is 15 : 15 : 70. The line includes the first in the USSR hydraulic press D–0053 especially designed for this purpose; its strength is 20,000 tons (360 kg./cm?). A diagram of the production line and its technical parameters are given.

ASARCO ALV 0006832

279. Regulating the Process of Rendering Harmless Chromium-Contaminated Waters Circulated in Asbestos-Cement Plants.
P. P. Bornovolakov and V. V. Pushkarev. Stroit. Mater., 1979, No. 5, 19.

An automatic system is described, in which variations in the hexavelent chromium content in the circulated water (due to changes in the amount of chromium introduced into the water from cement) are recorded, and a corresponding signal is sent to the regulating electrolytic device. This device electrolytically introduces divalent iron ions (by electrolysis of an iron electrode) into the circulated water to reduce hexavalent chromium and remove it from the circuit by precipitation.

280. *Asbestos Cement Pressure Pipes.*
Water Services, Pipes and Pipelines Feature, Vol. 83, No.1001, July 1979, p.518.

A water treatment works under construction on the outskirts of Reading will soon boost the local water supply by an extra 27 to 32 M litres/d (6 to 7 M /d). Everite asbestos-cement pressure pipes supplied by TAC Construction Materials Ltd. were chosen to supply water to the works.

Water for the new works is conveyed from an intake on the River Kennet via a 675 m (2214 ft) long twin pipeline of TAC Everite pressure pipes, 900 mm (35 in) diameter, Class 20.

281. Cement Matrices.
The Resistance to Crack Growth of Asbestos Cement.
Lenain, J. C. and Bunsell, A. R. Journal of Materials Science Vol 14 (1979) pp. 321–332.

An approach using crack resistance, or R–curves, is used to characterize the fracture of asbestos cement sheeting, and is able to accommodate some of the restrictions on specimen size which limit the application of linear fracture mechanics to the material. The location of acoustic emission and optical observations have shown the development of a microcracked zone ahead of the major crack, which can theoretically be considered an extension to the real crack length. The experimental R–curve is related to a theoretical R–curve based on the material composition.

282. Asbestos-Cement Pipe Joint – Water Services.
Pipes & Pipelines Feature, Vol. 83, No.1001, July 1979, p.507.

A speedily assembled, high integrating joint, for use on Turnall asbestos-cement pipes has been introduced by TAC Construction Materials.

Tests have proved that the new Tacseal jointing system has considerable advantages over many competitive systems in that it fully satisfies the BS 3656 requirement for angular deviation and axial draw. It provides a high integrity joint under conditions ranging from gravity flow to 12 m (39 ft) head surcharge pressures, even when tested under full differential loading conditions. The joints have two trapped rings, as opposed to the four rolling rings of Turnall sleeve joints, and are simply and speedily assembled using only hand leverage. They can be interchanged with Turnall sleeve joints on asbestos-cement drainage pipelines by effecting a simple modification to the pipe ends.

283. USSR Patent No. 64 3467. Expanding Asbestos Fibres by Surface Treatment with Ethyl Orthosilicate.
Yu. A. Ivanov Et Al.

The expansion of asbestos fibres is enhanced by treating them in aqueous medium, containing ethyl orthosilicate, (0,05–2% with respect to asbestos). The adhesion of asbestos fibres to cement grains in asbestos cement is improved.

OTHER FIBRES REINFORCED CEMENT COMPOSITES

284. The Flexural Strength of Cement-Based Composites Using Low Modulus (Sisal) Fibres.
D. G. Swift and R. B. L. Smith. Composites. July 1979, pp. 145–148.

A model of the flexural behaviour of a cement-based composite reinforced with low modulus fibres is presented. The model predicts large increases in the flexural strength of such composites under certain conditions. An experimental programme was carried out on sisal fibre-reinforced cement; the results of this work confirmed the theoretical predictions, with increases in flexural strength – by a factor of more than three – being achieved with suitable choices of mix parameters and fibre incorporation techniques. It is suggested that the results obtained will be of considerable potential in such areas as housing construction in the developing countries.

285. British Patent 1 541 770. Method of Incorporating Carbon Fibres into Cement to Produce Reinforced Structures Having Improved Flexural Strengths.
Union Carbide Corporation, USA.

Polyethylene oxide ($M=5 \times 10^5 - 5 \times 10^6$ g/mole) added in sufficient quantities enables the carbon fibres to be dispersed sufficiently to improve properties of cement.

286. British Patent 1 539 896. Improvements in or Relating to Reinforced Concrete.
Tinsley Wire (Sheffield) Ltd, UK.

Methods are described for chopping twisted wire netting and welded wire mesh regularly to produce 'star' shaped elements suitable for reinforcing concrete.

287. British Patent 1 539 898. Improvements in or Relating to Reinforced Concrete.
Tinsley Wire (Sheffield) Ltd, UK.

A method is described for cutting welded wire mesh into square shapes with projectories at the corners to

ASARCO ALV 0006833

form a concrete reinforcing element (this differs in shape form that described in BP 1 539 896).

288. **British Patent 1 539 899. Improvements in or Relating to Reinforced Concrete.**
Tinsley Wire (Sheffield) Ltd, UK.

Hexagonal loops with corner projectories can be cut from twisted wire netting which are suitable for reinforcing concrete.

289. **British Patent 1 540 770. Alkali-Resistant Glass Composition and Glass Fibres Made Therefrom.**
Kanebo Ltd, Japan.

Glass compositions are described which have high ZrO_2 contents (12–12·5 mole%) but still have sufficiently low spinning temperatures.

290. **British Patent 1 528 416. Synthetic Non-Metallic Inorganic Fibres, The Production of such Fibres, and Products Comprising such Synthetic Fibres.**
Rockwool International A/S, Denmark.

Rockwool fibres have improved alkali resistance and strength after autoclaving at 200°C for 5 hours in saturated steam. Thus they are particulary useful for reinforcing cement and replacing asbestos fibres in other reinforced products such as plastics. Glass fibres are also improved by this process.

291. **British Patent 1 528 545. Process for Preparing Glass Fibre Reinforced Cementations Substrate.**
Asahi Glass Company Limited, Japan.

A conventional sheeting process can be used for "Cem–Fil" reinforced portland cement when the slurry contains 0·03–5% of natural fibre (such as cotton) and 3–10% wood pulp. Improved properties such as impact strength are claimed.

TACBOARD

292. Tacboard, TAC's new GRC general purpose building board, is the subject of a letter of approval from the Fire Research Station, Boreham Wood. The letter states that Tacboard can be used to up-grade doors to Fire Precautions Act requirements as an alternative material in situations where asbestos wood is approved.

Tacboard, 4·5 mm thick, was also successfully fire tested recently in a construction giving half an hour's fire protection to a timber floor. These tests took place at Warrington Research Centre.

TAC is a Turner and Newall company.

PART 3. ASBESTOS TEXTILES

293. **Belgian Patent No. 863,749. Nondusting Asbestos-Base Materials.**
A. M. P. Schneider.

Asbestos fibre core is surrounded with silicate glass fibres forming a strand or a woven cloth. The glass fibres have good thermal resistance (more than 600°C) and good tensile strength. The composite is suitable for various industrial applications.

294. **US Patent 4,126,541. Apparatus and Method for Refining Asbestos Dispersions.**
Raybestos-Manhattan, Inc.

An improved apparatus for the refinement of colloidal asbestos dispersions comprises a horizontally disposed cylindrical tube having a plurality or closely spaced holes around the periphery thereof, a hilical screw disposed within the tube, and a flanged jacket concentric with and spaced outwardly from the tube. A slurry of unrefined dispersion is continuously fed into the tube to fill it. Refined slurry is drawn through the holes by a suction pump connected to the jacket while contaminants are retained in the tube and moved by the screw to the outlet end of the tube where they are compacted and removed as sludge through a spring loaded discharge door.

1. In the production of asbestos yarn as taught, for example, by Novak and Orzechowski in the US Pat. No. 3,453,818, the yarn is formed by extruding colloidally

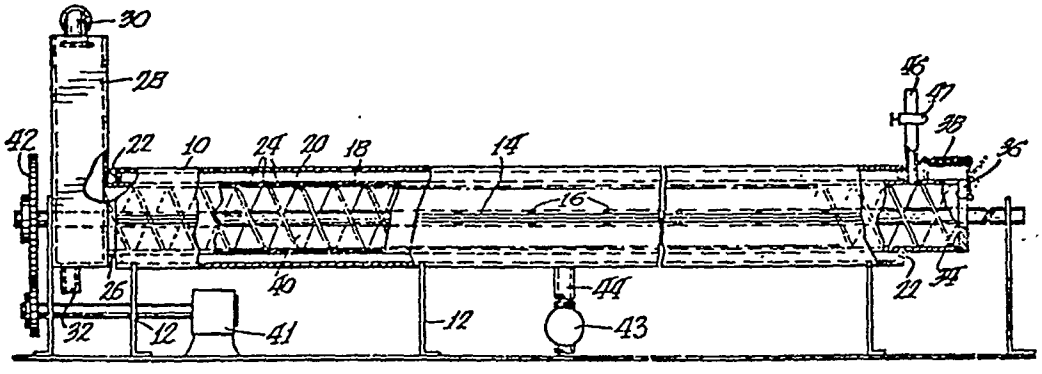

ASARCO ALV 0006834

dispersed asbestos fibres through extrusion nozzles into a coagulating liquid.
2. There are many known methods of refining asbestos dispersions, none of which are entirely satisfactory.

295. Canadian Patent No. 1,039,471. Production of Dispersion-Based Asbestos Yarns.
TBA Industrial Products Limited UK.

According to the invention, there is provided the method of making asbestos yarn which comprises the step of
(a) providing an aqueous dispersion of asbestos fibres in dispersion-forming chemicals;
(b) forming at least one elongate continuous stream of said dispersion and contacting said stream with a coagulant for said dispersion to form at least one self-sustaining wet strand of asbestos fibres and coagulated dispersion-forming chemicals together with uncoagulated residues thereof and water;
(c) extracting substantially all of said coagulated dispersion forming chemicals and uncoagulated residues thereof from the wet strand;
(d) adjusting the water content of the wet strand to provide an essentially dry strand having a moisture content of not more than 20% by weight allowing the twisting of said dry strand on a spinning frame, and
(e) twisting said essentially dry strand to provide said asbestos yarn.

PART 4. ASBESTOS FRICTION MATERIALS

296. British Patent 1,529,091 Friction Element.
Bendix Corp.

Vehicle brakes are made from a mixture of up to 55% by weight of asbestos, up to 25% each of rubber scrap or other organic modifier and cashew nut powder, up to 20% of graphite, up to 35% of thermosetting phenolic formaldehyde resin and up to 30% of lignosulfonate or kraft lignin; assigned to Bendix Corporation, October 18, 1978; 13 pages.

297. USSR Patent No. 652,198. Moulding Composition for Friction Materials.
G. V. Soboleva et al.

Friction materials are produced from kaolin, cellulose, alumina, calcium stearate, phenol-formaldehyde resin, mineral wool, asbestos and graphite. The materials have increased coefficient of friction, improved wear resistance and impact strength.

298. US Patent 4 137 214. Asbestos-Free Friction Composition.
Thiokol Corp.

A friction material, substantially free of asbestos comprises: a thermosetting resin; cashew nut particles; from 5 to 15% of a nonasbestos fibre; and more than 20% by weight of a powdered inorganic compound having a Moh's hardness rating greater than 2.0 and less than 5.0 and capable of being subjected to temperatures of greater than about 425°C without substanial chemical or physical alteration.

299. US Patent 4 072 650. Friction Materials.
Littlefield, J. B.

A friction material is produced by moulding a composition of: an elastomer binder consisting of a copolymer of butadiene and styrene; a granular filler; partially polymerized cashew nutshell oil resin; at least one curing agent; and dicyclopentadienyliron.

300. Estimation of Wear of Some Asbestos-Reinforced Friction Materials.
A. K. Pogosyan and N. A. Lambaryan, Wear Mater. Int. Conf. 1977, ASME New York, 547-551 (in English).

The wear of a polymer-matrix friction material depends on the load, speed and time. An equation defining the dependence of the temperature on these three factors has been presented and tested on five asbestos-based friction materials sliding against steel and cast iron.

301. Carbon-graphite brakes.
Tribology June 1979.

Work at NASA's Lewis Research Center has demonstrated the potential of a new brake lining material for considerably increasing brake wear life in comparison with the copper-based composites currently used. This is particularly important for high-energy aircraft brakes. Unless improved materials are developed, the trend towards heavier aircraft will result in either shorter brake lining life, with increased maintenance, or larger brake lining area which will make landing gear heavier.

The life of current aircraft brake lining materials is strongly dependent on the temperature reached during braking, largely because of the softening of the metal binder. In addition, thermal cycling promotes cracking and spalling which accelerate wear and oxidation. It was therefore decided to examine the possibilities of carbon/graphite materials. These are known to have good friction and wear characteristics and they also possess attractive thermal properties, including a conductivity comparable with metals, a very high mass specific heat and a thermal expansion coefficient about half that of copper-based materials. Moreover, they retain their mechanical properties, virtually unchanged, at temperatures up to 1100°C.

Experiments simulated the operation of caliper brakes using different carbon/graphite material formulations for the brake pads and two different materials for the

ASARCO ALV 0006835

brake disc: one a steel now used in aircraft disc brakes, the other a graphite/cloth-reinforced/carbon material. The materials selected for the study showed the effects on high-energy friction and wear of different concentrations of carbon binder, changes in filler constituents, and the addition of an oxidation inhibitor, and of incorporating a reinforcement of graphite fibres.

Reductions in binder level, additions of boron carbide and additions of silicon carbide each increased wear. The wear rate was not affected by graphite-fibre additions. Severe wear and high friction was observed in the case of the graphite-cloth reinforced carbon composite sliding against a disc of the same material. Compositional changes that improve oxidation resistance, wear and friction performance are discussed.

Further information is contained in a 21-page report 'Friction and wear of carbon-graphite materials for high-energy brakes', by R. C. Bill, reference N78-26178, available as microfiche £1.19 (inc vat) or reproduced paper copy £1.50 from Tech Alert*.

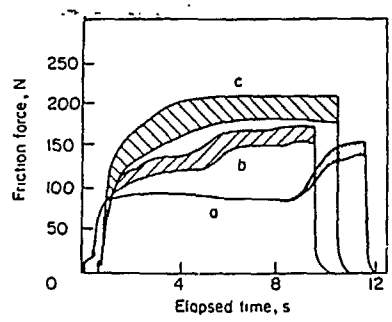

Friction data obtained from graphite-cloth-reinforced-composite (gcrc) sliding against a graphite-cloth-reinforced-composite disc under a normal load of 382N with a sliding speed of (a) 31 m/s, (b) 26 m/s and (c) 20 m/s

PART 5. ASBESTOS REINFORCED PLASTICS

302. British Patent 1,530,257. Reinforced Thermoplastics.
TBA Industrial Products Ltd.

A reinforced thermoplastic moulding composition of improved flexural and impact strength is made from nylon 6, nylon 11 or nylon 12 having dispersed therein (1) 1%–60% by weight of Chrysotile, Anthophyllite, Amosite or Tremolite asbestos and (2) 0.05%–5% of N, N'-diphenyl-para-phenylene diamine and optionally potassium iodide or lithium chloride.

303. US Patent 3 969 313. Thermoplastic Composite Compositions I.
Asahi Kasei KKK.

A thermoplastic composite composition comprises a thermoplastic material and a polyoefin composition containing specific reactive inorganic filler at a high concentration. The composition may additionally contain fibre reinforcement.

304. Fillers for Plastics.
H. Domininghaus Gummi-Asbest-Kunststoffe, 1979, 32, No. 5, 294-298.

Technical and economical importance of the use of fillers for plastics is discussed. Requirements concerning the properties of the fillers are presented. Brief characteristics of various fillers is given including asbestos.

305. Japanese Patent No. 78 141,359. Moulding Materials Based on Phenolic Resins.
Nippon Kainoru Co. et al.

Premix of hardened novolak phenol-formaldehyde copolymer fibres and asbestos or glass fibres is used as a filler for phenolic resins. Articles having good heat resistance, electric properties and mechanical characteristics (esp. impact strength) are obtained.

306. Japanese Patent No. 78 141,358. Moulding Composition Based on Phenolic Resin.
Sumitomo Bakelite Co. et al.

Mouldings having good heat resistance, excellent electric properties and high mechanical strength are produced by preparing a premix of a hardened phenol-formaldehyde resin fibres with asbestos or glass fibres, and introducing this premix into a phenolic resin (e.g. novolak). A hardening agent and a release agent can be added. Methanol and water are used as solvents. Subsequently, the product is granulated.

307. British Patent I 533 262. Silane-Coated Asbestos and Method for Preparing Same.
Dresser Industries Inc, USA.

Chrysotile asbestos can be coated with silanes providing they are previously treated with aqueous acids (e.g. H_2SO_4). The surface is now compatible with organic materials so that improved reinforcement of plastics is possible.

ASARCO ALV 0006836

PART 6. BUILDING MATERIALS

A. Asbestos Reinforced

308. Japanese Patent No. 78 130,724. Building Materials Based on Calcined Gypsum.
Denki Kagaku Kogyo K. K.

Building materials having high bending and impact strength are produced by extruding a composition containing calcined gypsum, asbestos, glass fibres, sawdust, a thickening agent (such as methyl cellulose) and a setting retardant (such as sodium citrate and water).

309. Japanese Patent No. 78 44,489. Nonflammable Boards Having Improved Weathering Resistance.
Matsushita Electric Works Ltd.

Title boards are made by mixing gypsum with acrylamide, an amino resin based on acrylamide, a fibrous reinforcing material (such as asbestos) and water. Trimethylolmelamine, potassium persulphate and an antifoaming agent can be included, the mixture is moulded and cured for 48 hours, and then dried at 80°C, the density is 0·78g/cm³.

310. Polish Patent No. 89,800. Asbestos Board.
J. Godycki et al.

Strong asbestos boards for structural purposes is produced by mixing asbestos with an acidic (p^H 2–5) aqueous dispersion of urea–formaldehyde resin, admixing a filler (such as feldspar) and starch pretreated with an alkali. The composition is acidified with sulphuric acid. The tensile strength of the board along the fibres is 40kg/cm² and the compressive strength is 350 kg/cm². The heat conductivity coefft. is 0·18 keal/m.h.°C.

311. Japanese Patent No. 79 00,062. Embossed Polyvinyl Chloride-Asbestos Laminates.
Sumitomo Chemical Co. and Toppan Printing Co.

An asbestos sheet is coated with a polyvinyl chloride-containing solution with addition of dioctyl phthalate plasticiser and a tin epol. as a stabiliser at 120°C. Subsequently, heat treatment at 220°C is applied for 2 min. The resulting porous coating is screen-printed with a pigmented polyvinyl chloride composition and heated again at 220°C for 3 min. A relief pattern is formed.

312. Japanese Patent No. 79 06,903. Polymer Binder For Asbestos Sheets.
Asaki-Dow Ltd.

Title binder is prepared by emulsion-polymerising a monomer mixture containing N-methylolacrylamide (or N-methylmethacrylamide), butadiene, an unsaturated carboxylic acid and styrene. The resulting copolymer latex is used as a binder for asbestos sheets used as backing materials for cushioned flooring materials.

313. German Patent Application No. 2725398. Surface Protection of Articles Made of Mineral Fibres.
Gruenzweig und Hartmann und Glasfaser A. G.

The surfaces of pressure – and impact – sensitive structural materials containing mineral fibres are protected with netting made of asbestos, fibres.

314. Japanese Patent No. 77 26,524. High-Strength, Lightweight Gypsum Panels.
Ube Industries Ltd.

Gypsum hemihydrate is mixed with lightweight aggregates, fibrous materials (e.g. asbestos), water-soluble polymers (e.g. polyvinyl alcohol), a silane coupling agent and water. Hardening accelerators or retardants can be added. The mixture is moulded and hardened. The density of the product is 0·66g/cm³; the bending strength is 63·5 kg/cm².

B. Glass Fibre Reinforced Building Materials

315. British Patent 1 536 663. Fibre Reinforced Articles.
Cape Boards and Panels Limited UK.

Fibre-reinforced plaster is described. Various fibres can be used, although rock wool would appear to be preferred.

316. US Patent 4 075 884. Fibre Reinforcing Composites.
The Governing Council of the University of Toronto, Canada.

A fibre-reinforced gypsum composite consisting of a gypsum matrix material having embedded therein a tape made of an interweave of absorbent fibres with reinforcing glass fibres, is described.

317. USA Patent 4 139 025. Glass Fibre Reinforced Multilayer Plastic Pipe.
Hobas Eng A. G.

318. USA Patent 4 136 223. Plate Shaped Roofing Element.
Hotaco A/S.

Plate-shaped roofing element comprises adhesive foam plastic having a surface facing upwards in a mounted position and having a covering plate comprised of bituminous roofing felt with surface facing the element being covered with a layer of gravel pebbles, and a layer of glass fibre contacting the surface of the roofing felt and having holes through which the adhesive foam plastic during foaming becomes adherent to the bituminous roofing felt.

319. British Patent 1 532 621 Bonded Wet-Laid Glass Fibre Substrate for Cushioned Vynyl Flooring.
Nairn Floors Ltd.

ASARCO ALV 0006837

PART 7. ASBESTOS PACKING, SEALING AND COATING COMPOSITIONS

320. Japanese Patent No. 79 03,866. Waterproofing of Asbestos Gaskets with Siloxane Emulsions.
Shin-Etsu Chemical Industry Co.

Siloxane with terminal hydroxy groups is grafted with styrene or methylstyrene is emulsified and combined with hydrogen siloxane and a catalyst. The combination is used for the impregnation of asbestos gaskets to improve their water repellency.

321. Japanese Patent No. 78.143,631. Fireproof Coating for Electric Cables.
Nippon Steel Chemical Co.

Coatings are formed on electric cables from an aqueous emulsion containing a polymer (such as an ethylene-vinyl acetate copolymer), with addition of a water-insoluble inorganic hydroxide (such as aluminium hydroxide), inorganic fibres (asbestos) and a phosphate ester (such as tris-chloroethyl phosphate). The composition can also contain titanium dioxide and a surfactant.

322. Japanese Patent No. 79 20,009. Aqueous Dispersions of Waxes.
K. Naruse.

A paraffin wax, or microwax, and a petroleum resin are dispersed in water in presence of polyvinyl alcohol as a dispersing agent. This composition, having good stability is used to form a water-repellent coating on asbestos tiles.

323. British Patent 1,524,091 Sealing Composition.
Coal Industry Ltd.

Composition for sealing coke oven doors, cracks, gaps or spigot-joints comprises 25%-55% of a polyvinyl acetate-base latex, 10%-20% of additional water, 25%-45% of minus 200-mesh talc or other particulate filler and 5%-15% of asbestos.

324. US Patent No. 4,129,453. Sulphur Composites Used as a Coating or Structural Material.
Chevron Research Co.

Title materials contain sulphur, a plasticizer (such as dicyclopentadiene) asbestos fibres (chrysotile-amphibole asbestos blend) and a dispersant. A mixture of talc with chrysotile-tremolite asbestos can be used. Water and acid-resistant coatings are obtained.

PART 8. ASBESTOS PAPER AND INSULATING MATERIALS

325. Japanese Patent No. 79 03,777. Fire-Resistant Paper Laminates.
Hitachi Chemical Co.

Paper is coated with a dispersion of a phenolic resin and an inorganic filler, such as asbestos. Then the paper is coated with a resin-containing varnish. Subsequently several sheets of coated paper are stacked, heated to 160°C and pressed at 100kg/cm^2. The fire resistance of this laminate is about doubled compared with similar known products.

326. US Patent 3,928,210. Electrical Cable Insulation.
The Dyna-Therm Corp.

The composition for insulating electrical cables against fires caused by current overloading comprises 4-45% by weight of a polyvinyl acetate emulsion, 1-15% of chlorinated paraffin or the like and 5-50% of incombustible fillers e.g. asbestos.

327. British Patent No. 1,523,152. Flexible Composite Fire-Barrier.
Dunlop Ltd.

Fire resistant wrapping for aircraft fuel hoses is prepared by impregnating a carbon fibre felt, cotton, nylon or a wool fabric with an intumescent polyurethane or chlorosulphonated polyethylene composition. The outer layer of the fabric is a treated or untreated carbon fibre felt or asbestos foam.

328. British Patent 1,417,314. Insulating Board.
Aikoh Co. Ltd.

A board for insulating molten steel in a feeder head during casting is formed from a mixture or 5-67% by weight of an expanded mineral material, 3-40% of asbestos, 10%-89% of alumina, 3-30% of phenolformalde resin.

CHAPTER 9. REFRACTORY FIBRES

329. British Patent 1 539 140. Process of Producing Polycrystalline Oxide Fibres.
The Carborundum Company USA.

A method is described for producing fibres from basic aluminium chloride, zirconium acetate, zirconium oxychloride or mixtures of these compounds. Basic aluminium chloride is formed by dissolving powdered aluminium in hot aqueous aluminium chloride solution. The viscosity is reduced to a spinnable viscosity by the addition of lactic acid. 3% colloidal SiO_2 improves the

ASARCO ALV 0006838

final fibre properties. Oxidation occurs at 900°C or 1250°C in the presence of silica.

330. US Patent No. 4,142,008. Carbon Filaments Coated with Boron.
Avco Corp.

A carbon filament (diameter 4-8 mils) is coated first with a layer of pyrolytic graphite (from methane at 7,2300°C), and then a layer of boron by a conventional method. The graphite buffer layer prevents cracks in the carbon core. Thus a boron-on-carbon filament having high strength and high modulus is obtained.

331. US Patent 4 069 297. Process for Producing Carbon Fibres.
Toho Beslon Co Ltd, Japan.

A process for continuously producing carbon fibres is described.

332. British Patent 1 534 192. Highly-Handleable Pitch Based Fibres.
Union Carbide Corp, USA.

A method is described for producing highly oxidised pitch fibres which can be easily handled and converted into carbon fibres. A pitch with a high mesophase content is extruded and the fibres oxidised at 315°C. A high oxygen content had no deleterious affect on the resulting carbon fibre but the precursor has a strain to failure of 5% and weaving is therefore possible prior to carbonisation.

333. British Patent. 1 535 442. Process of Producing Carbon Fibres.
Toray Industries Inc, Japan.

PAN precursors are treated with aqueous $KMnO_4$ to incorporate MnO_2 or MnO into the surface. The conventional oxidation process is used in which some affect of the oxidising agent is claimed. Dilute HC can be used to wash the preoxidised fibre prior to carbonisation. Improved properties are claimed.

334. Techniques for the Preparation of Boron Fibres. (Review).
Carlsson, J-O. Journal of Materials Science Vol 14 (1979) pp 255-264.

This review covers direct spinning of boron fibres, vapour deposition techniques which involve substrate fibres, and the utilization of electrical discharges. The role of various substrates, and factors affecting the deposition rate are discussed in connection with the halide process, and the review concludes with a comparison of fibre strengths for the different processes. Methods for improving the fracture strength of fibres after production are described, and the mechanisms considered in some detail.

335. Boron Nitride Fibres. J. Economy and R. Lin. Boron Refract. Borides 1977 (Springer: Berlin) 552–564 (in English).

A survey is presented of the preparation and properties of Boron Nitride fibres: 19 references.

336. Advanced Plastic Composites – Sleeping Giants Among Construction Materials.
D. Wirsen. Kem Tidskr. 1979, 91 (2) 16–22 (in Swedish).

Composites containing polyimides, epoxy resins, polybenzimidazoles, polyquinoxalines, and polysulphones reinforced with graphite and Boron fibres are described. Their potential application, especially in the automobile industry are discussed.

CHAPTER 10. COMPANY NEWS–TENDERS

337. New Wallboard Product.
World Minerals. No.141, June 1979. p.58.

Vermont Industrial Products, a subsidiary of the Vermont Asbestos Group, will soon be marketing a wallboard product based on magnesium and calcium oxide and silicates derived from the tailings of the company's asbestos mine at Lowell, Vermont. The new product, which is asbestos-free, will use wollastonite as a filler.

338. Johns-Manville.

Despite heavy costs resulting from a strike and the building of a new fibre-glass facility and problems at its Quebec asbestos operation, the Johns-Manville Corporation turned in record fourth-quarter earnings of $34·3 million, or $1·58 a share, a jump of 30·9 per cent from the 1977 final quarter, according to yesterday's company report.

Revenues were up 16·5 per cent to $454·4 million, lifting the annual revenues to $1·68 billion, up 13·5 per cent. Net income for last year rose to a record $121·6 million, or $5·62 a share, against $102·6 million, or $4·78 a share, for 1977.

339. Asbestos Market Outlook Improves, Cassiar Head Tells Shareholders.
The Northern Miner June 21, 1979.

Vancouver – The outlook for the asbestos market is growing brighter.

Although severe price competition resulted from a weak market in 1978, increasing asbestos consumption and a rebuilding of inventories have led to more balanced conditions. J. Douglas Little, President and Chief Executive Officer of Cassiar Asbestos, told the annual meeting.

ASARCO ALV 0006839

"Cassiar fibre inventories have been reduced and it is expected will be reduced further as there is a market for all present production.

"Due to the decline in the Canadian dollar. Canadian asbestos has become more competitive in the world market."

The future for asbestos is further enhanced, he said, by the fact that substitutes for it have become more expensive.

Mr Little commented that 1978 was an "extraordinary year" for Cassiar Asbestos, with the closure in August of its Clinton Creek mine in the Yukon and the longest strike in the company's history on Sept 15.

The strike, which ended Jan. 15. continued to affect Cassiar's results in the first quarter of 1979.

Sales for the first five months of the year were 56,380 tons valued at $38,760,000. Production at the Cassiar mine for the same period was 42,697 tons. By the end of May only 2,400 tons of Clinton Creek inventory remained.

The major portion of the company's long-range capital program should be completed by the end of 1979, said Mr Little. Since the program, designed to update facilities, increase production, meet environmental standards and improve living conditions, was begun in 1973, about $77million has been spent. Of this, $19 million has been for environmental improvements.

Exploration at the Cassiar property has been encouraging, he said. An underground adit begun in 1978 at the 5.127-ft. level to test for possible downward extension of the known ore zone about 100 ft. below the predicted open pit bottom.

By the end of May, the adit had been extended to 3,018 of the total planned length of 4.500 ft. Six diamond drill holes have been completed and the downward extension of the zone established. The program is continuing.

Mr Little paid tribute to Nicholas Gritzuk, former chairman of the company who died Apr. 14, No successor has been named yet.

Kenneth H. Dixon. corporate general manager, mining, Turner & Newall Lrd., joins the board of directors.

340. **Profits rise at Everite.**
Financial Times July 1979.

Everite, the South African asbestos products and mining group, which is controlled by the Eternit group of Switzerland, has announced a 24·7 per cent operating profit increase to R9·55m ($11·3m), for the year to June 30, 1979, from R7·66m the previous year. Turnover rose by 21·7 per cent to R78·5m ($92·9m), from R64·5m.

In part, this improvement arose with consolidation for the full year and other acquisitions during the past year. Just how much of this year's growth was attributable to generally higher activity is not revealed in the preliminary announcement of results, but the company says that a slight increase in building industry activity in the six months to end-June is reflected in higher sales volume.

The rise in operating income was to an extent held down by lower dividend income from the unconsolidated asbestos mining interests. The Cape blue (crocidolite) asbestos mining operations cut their dividend contribution to R765,000, from R1·02m.

341. **United Asbestos net earnings paying off debt.**
The Northern Miner July 12 1979.

United Asbestos Inc. in its fiscal year ended Mar. 31. 1979, earned a healthy profit and was able to take a good bite out of its debt position relating to its now-closed-down Midlothian asbestos mine, a preliminary statement from the company shows.

Net profit for the year was down only slightly to $6,762,704, equivalent to 96¢ per share, from the net of $7,138,069, or $1·01 per share, the previous fiscal year. At the same time, deferred debt repayment amounted to $5·4 million.

The year's net profit was derived from revenues of $20,510,405 (all from operation in joint venture with Asarco) of Lake Asbestos of Quebec, at Black Lake.

The final quarter of the year ended Mar. 31, 1979, saw revenue of $4,678,983 to leave a net profit of $1,328,956, equal to 19¢ per share. This was also down slightly from a year ago's quarter when revenue amounted to $20,714,002 to leave a net profit of $7,138,069, or 21¢ per share.

Total revenue from operation of the Black Lake asbestos mine for the year was $35,870,461, of which Lake Asbestos received $15,360,056 and United Asbestos received the above-mentioned $20.510,405.

342. **Asarco joins Golden Gate Expl. for work on Asbestos Property.**
The Northern Miner, July 5, 1979.

Vancouver — in agreement between Golden Gate Explorations and Asarco, the latter has committed to spend a minimum of $50,000 on additional drill work to be carried out on the Rex asbestos property at Haines Junction, Yukon, by the end of August 1979.

In addition to the $50,000 commitment, Asarco will spend $525,000 and pay $65,000 to Golden Gate up to 1981 to earn a 75% interest in the property, with Golden Gate retaining a 25% interest.

The program, which will include a minimum of six diamond drill holes, is to confirm results of a rotary drilling program carried out in 1978, William J. Abraham, president of Golden Gate, told The Northern Miner.

The company drilled 12 percussion holes in a new area of the property, southwest of the Main Zone. The holes cut between 17 ft. and 46 ft. of overburden, less than in previous drilling, and encouraging sections of chrysotile asbestos fibrebearing rock, Mr. Abraham said.

The new area is approximately 700 ft. long by 500 ft. wide and is open, particularly to the south west.

Prior to 1978, work had been concentrated on the Main Zone which consists of asbestos float along a northeasterly trending magnetic anomaly. It is about 1,800 ft. long with a width of approximately 400 ft.

ASARCO ALV 0006840

Depending on results of the initial phase, a second phase of further drilling, estimated to cost $200,000, will begin around September, reports Mr. Abraham.

TENDERS: PROJECTS FINANCED BY WORLD BANK

343. Brazil
$100 million project for water supply and sewerage systems in the North eastern States of Bahia, Pernambuco and Ceara.
Further information is obtainable from
Companhia de Água e Esgoto do Crará
(CAGECE)
Rua Dr. Lauro Chaves
60000 Fortaleza, Ceará,
Brasil.

344. Tunisia. Potable Water Project.
About $72 millions is allocated for renovation and expansion of existing potable water supply systems.
Further information obtainable from
SONEDE
23 rue J. Nehru,
Tunis,
Tunisia.

345. Colombia. Potable Water & Sewerage Project.
About $30 millions was allocated to carry out above work.
Further details obtainable from
Gerencia de Ingeniería
Empreaa de Acueducto y
Alcantarillado de Bogotá
Apartado Aéreo No. 80186
Bogotá, D. E.
Colombia.

346. Paraguay. Potable Water Project.
About $6 millions is allocated for financing 48 communities potable water projects.
Further details can be obtained from
Ing. Guillermo R. Martínez Fleitas
Director SENASA
Mcal. Edtigarribia esq. Tacuarí
Asunción
Paraguay.

347. Jamaica.
The Kingston Water Commission in 1975 received a loan from the World Bank in various currencies. Part of the loan is for the construction of sewerage facilities in the lower west and central areas of Kingston and St. Andrew and will be applied to eligible payments under the contracts for which this invitation to bid is issued.
Further information can be obtained from
Water Commission
IBRD (World Bank) Project Unit
4 Marescaux Road
Kingston
Jamaica
West Indies.

PART 11. ASBESTOS HEALTH HAZARDS AND PRECAUTIONS

348. Company News and Mineral Notes.
Industrial Minerals, No. 140, May 1979, p.61

The lengthy battle between AMOCO CHEMICAL CORP. and the Oil, Chemical, and Atomic Workers Union (OCAW) has resulted in medical tests on the employees being carried out at the company's expense. The workers from Amoco's New Castle, Delaware are now being tested for problems related to asbestos exposure. Union members at the Waukegan, Illinois plant of John Mansville went on strike last week to support their demands for access to medical test records. The plant produces roofing material and refractory fibres using asbestos products.

349. In Australia the Asbestos Diseases Society has asked the New South Wales Minister for Health to set up a public enquiry into all aspects of the Australian asbestos industry. The same proposal was discussed last year but no action has yet been taken. From the attitude of the society that there is no safe level of exposure to asbestos it would appear that it would like to completely ban all uses of asbestos.

350. Following negotiations that have lasted since last June, James Hardie Asbestos Ltd. has agreed to pay a lump sum of about A $14,000 for every one of its employees permanently disabled or killed as a result of working with asbestos. Three state branches of the Federated Miscellaneous Workers Union of Australia are covered by the compensation offer.

351. Asbestosis damages of £35,112.
Financial Times June 14, 1979.
Damages totalling £35,112 are to be paid by the Ministry of Defence to three men who contracted asbestosis while working at Devonport dockyard.
The three Plymouth men, who have all retired, sued the Ministry for damages in a High Court civil action at Exeter. Liability was admitted, and Mr. Justice Ackner was asked to decide how much each man should receive. Yesterday he awarded damages, with costs, as follows:

ASARCO ALV 0006841

Mr. William Sweet, 65, of Pasley Street, £17,873; Mr. Joseph Matta, 65, of Charlotte Street, Keyham, £10,043; Mr. Archie Rickard, 57, of Royal Navy Avenue, Keyham £7,196.

352. Asbestos US Scene March 1979, National Safety News.

A subcommittee of the House Committee on Education and Labor held oversight hearings on asbestos health hazards to school children. The Environmental Defense Fund's Robert Rauch said that "potentially millions of children in thousands of public schools across the country are being subjected to a cancer risk of unknown magnitude" because of asbestos fire-proofing and acoustic installations made prior to 1973 when the EPA banned such uses. However, Yale's Dr. Robert M. Sawyer said that "the number of school situations I am really concerned about is not that great. I do not think panic and sensationalism are called for." Testimony and discussion revolved, in part, about which level of government should pay for the structural changes that might be necessary.

Rep. George Miller (D, CA) and seven other Representatives introduced H. R. 1524 to establish an asbestos hazard detection fund and a federal loan program for removal of the substance. The trust fund would be composed of payments by asbestos manufactures based on the amount of material they produced over a given period. The bill would also provide for an HEW task force to coordinate federal activities in detecting and in assisting the elimination of the hazard. One of the co-sponsors said that 'asbestos has been found in 1,000 of the 6,000 schools inspected in the country."

353. Commons Roof Asbestos Lining to be Removed.

The House of Commons chamber will be closed for seven weeks during the summer recess while the asbestos lining is removed from the roof.

Mr. Michael Heseltine, Evironment Secretary, said yesterday that although the roof had been completely re-sealed last year, it had been decided the asbestos should be removed "as soon as practicable."

Work is to begin at the start of the recess—the end of next month—and is expected to take 10 weeks.

354. Toxicity Law is Overkill says ATMI's Carter.

R. Hyper. Daily News Record 9: 19, Feb 5th 1979.

The head of ATMI's chemical substances subcommittee talks about the Toxic Substances Control Act and the negative impact it will have on the textile industry.

355. Biggest Cancer Battle Predicted for 1979.

Job Safety & Health 6:32 Dec 1978.

A proposed standard to control workplace exposure to cancer causing chemical and industry efforts to fight it are discussed.

ASBESTOS ASSOCIATED DISEASE—RECENT FINDINGS

356. Malignant mesothelioma of the pleura in Barrow-in-Furness. (English)
Edge. J. R., Choudhury, S. L., *Thorax*, 33, 26–30, Feb. 78. [Human, Asbestos Analysis, Asbestosis Complications, Lung Analysis Pathology, Mesothelioma Diagnosis Aetiology, Pleural Neoplasm Metastasis, Occupational Diseases, Aetiology, Pleural Neoplasms Diagnosis Aetiology Pathology, Ships]
High Carley and North Lonsdale Hospitals, Barrow-in-Furness, Cumbria, England.

357. Roentgenologic aspects and calcification of the diaphragmatic pleura in asbestosis (Author's translation). (Japanese).
Tatezawa, T., Oshima, M., Asakura, H., Akisada, M., *Rinsho Hoshasen*, 23, 661–4, 1978.
[Human, Asbestosis Radiography, Calcinosis Radiography, Case Report, Diaphragm, Pleural Diseases Radiography, English Abstract]

358. Familial mesothelioma after intense asbestos exposure at home. (English)
Li, F. P., Lokich, J., Lapey, J., Neptune, W. B. Wilkins, E. W., Jr., *J. Amer. med. Ass.*, 240, 467, 4 Aug. 78.
[Human, Asbestos Adverse Effects, Case Report, Environmental Exposure, Mesothelioma Aetiology Familial and Genetic, Pedigree, Pleural Neoplasms Aetiology Familial and Genetic]
Clinical Studies Section, Clinical Epidemiology Branch, National Cancer Institute, Boston, Massachusetts 02115, USA.

359. Malignant mesothelioma with minimal asbestos Exposure. (English)
Chen, W. J. Mottet, N. K., *Hum. Pathol.*, 9, 253–8, May 78.
[Human, Asbestos Isolation and Purification, Asbestosis Pathology, Case Report, Lung Neoplasms, Mesothelioma Pathology, US Government Supported, NIH]
Department of Pathology, University of Washington School of Medicine, Seattle, Washington, District of Columbia, USA.

360. Asbestos fibre dust and gastro-intestinal malignancies. Review of literature with regard to a cause/effect relationship. (English)
Miller, A. B., *J. chron. Dis.*, 31, 23–33, Jan. 78.
[Human, Asbestos Adverse Effects, Environmental Exposure, Gastrointestinal Neoplasms Aetiology Mortality, Occupational Diseases Aetiology, Review]
NCIC Epidemiology Unit, University of Toronto, Ontario, Canada.

ASARCO ALV 0006842

361. Asbestos-associated disease in United States shipyards. (English).
Selikoff, I. J., Hammond, E. C., *CA*, 28, 87–99, Mar.-Apr. 78.
[Asbestos Toxicity, Asbestosis Aetiology, Lung Neoplasms Aetiology, Mesothelioma Aetiology, Ships]
Hemolysis during BAL chelation therapy for high blood lead levels in two G6PD deficient children. (English)

362. Lymphocyte responses to phytohaemagglutinin in patients with asbestosis and pleural mesothelioma. (English)
Haslam, P. L., Lukoszek, A., Merchant, J. A., Turner-Warwick, M., *Clin. exp. Immunol.*, 31, 178–88, Feb 78.
[Human, Asbestosis Immunology, Hypersensitivity Delayed, Lung Neoplasms Immunology, Lymphocyte Transformation, Lymphocytes Immunology, Mesothelioma Immunology, Plant Agglutinins, Pleural Neoplasms Immunology]
Department of Medicine, Cardiothoracic Institute, Brompton Hospital, London SW3, England.

363. Asbestos in periodontal dressings: a possible health hazard. (English).
Bakdash, M. B., Frydman, A., *Quintessence Int.*, 7, 61–5, Oct. 76.
[Human, Asbestos Adverse Effects Aetiology, Mesothelioma Chemically Induced, Periodontal Dressings Adverse Effects].

364. NIH research findings: Recent studies show workers exposed to asbestos years ago are at a greater risk for some diseases. (English).
J. Amer. med. Ass., 239, 2341–2, 9 Jun. 78.
[Human, Asbestos, Lung Neoplasms Aetiology, Mesothelioma Aetiology, Risk, Smoking Complications, Time Factors, United States]
Pleuropulmonary disease among asbestos workers in relation to smoking and type of exposure. (English).
Weiss, W., Theodos, P. A., *J occup. med.*, 20, 341–5 May 78.

365. Health Risks of Man-Made Mineral Fibres.
The Lancet July 21 1979.
In the wake of concern about the health effects of asbestos fibres, the Health and Safety Commission has turned its attention towards the fibres in man-made mineral-based materials –glass, slag, or rock wools used chiefly for insulation. They found indisputable evidence that the fibres irritate skin, eyes, and upper respiratory tract but this seemed not to have longterm consequences. Epidemiological studies have revealed no excess of cancer mortality among workers who make these materials but such studies inevitably have limitations and, as the commission points out, none have focused on workers in user industries, where occupational exposure is likely to be much higher. Animal experiments have suggested that the fibres (when presented in doses much greater than any likely human exposure) have no effects when inhaled, but fibres broader than 0.25 μm and longer than 8 μm produces mesothelioma-like tumours when implanted–results reminiscent of those with asbestos fibres. So, with data which neither assert safety nor establish health risk, the commission regards mineral fibres with suspicion and invites comment on its suggested occupational limit of exposure of 5 fibres/ml (5 mg/m3) of air.

PART 12. REVIEW OF JOURNALS

AC09 Underground Canalisation.
Published by Verlag Kramer & Co., CH 8001. Zurich, Spiegelgasse 14.

Contents.

366. An American View. Asbestos Cement. Cost, A Major Criterion.
Mr. Wilbur, Arthur D. Little; comments were extracted from a paper presented at the Sixth Annual Industry Conference of the A/C Pipe Producers Association in San Diego, May 1978. "The cost position of asbestos cement will improve. If we take a 1978 index of 100, asbestos-cement in five years will be at 102, cast iron and prestressed concrete at 105, and PVC at 110. In 20 years PVC will be at 130 and ductile iron and prestressed concrete at 120. Asbestos-cement, however, will be only 110."

367. Underwater Installation of Chlorine Injection Lines in Libya.
The use of asbestos-cement piping as ballast for a plastic pipeline, threaded through underwater supply lines likewise made of asbestos-cement pipe, is described. Planning and execution of this ≪three-piece pipeline≫ presented the engineer with somewhat out-of-the ordinary problems, which were rendered even more difficult by the unfavourable weather and heavy seas during the construction period.

ASARCO ALV 0006843

368. **An Integrated Water Supply and Irrigation System in the Mezzogiorno.**
The extensive irrigation programme for supplying the province of Foggia with water from the Fortore and Ofano rivers a part of a comprehensive development scheme for the south of Italy is described.

369. **Producing Higher Crop Yields in Brazil. Five Irrigation Systems.**
An irrigation system consists essentially of a water intake, a pumping station, a network of pipes and the actual sprinkling devices. In Brazil the main features of an efficient system can be summarized as follows:
- The pipe laying should be simple and not need expert labour.
- Water pressure is to remain constant for many years.
- The pipes should be resistant to waterhammer which can be caused by the sudden disconnection of a pump or the closing of a valve.
- The pipe material should be economical, to keep capital cost low and to allow quick amortization.

In a large number of instances these criteria of selection have led to the specification of asbestos cement pipe. Irrigation systems currently in use in Brazil are described in the following notes.

370. **Irrigation Using Motor Vehicles.**
Recently developed in Brazil to irrigate pastures, this system has now been introduced successfully to plantations of beans, potatoes, rice, soja, etc. It consists basically of the following parts:
- a pumping-station with a capacity of 500 m^3/h;
- the asbestos-cement pressure main which transports the water to the high areas to be irrigated;
- open ditches, about 100 m apart and following the contours of the land, from which the spray vehicles take the water;
- intersections of ditches with the asbestos-cement main where a stop cock can direct the water in either direction so that each ditch can be fed separately;
- the spray vehicles, which are driven along the ditches, stopping every 50 m to spray a radius of 50 m.

371. **Wolfsburg — Sewage Water Utilization for Agricultural Irrigation.**
A second land area of 1200 hectares was connected up for irrigation by means of a 10 km long asbestos-cement pressure pipe of 600 mm nominal bore and 10 bar working pressure, together with an interconnecting network comprising 30 km of asbestos-cement pressure pipes in nominal bores of 100 to 400 mm and 10 bar pressure. The main advantages of the sewage water irrigation scheme is that it makes the harvest more reliable and thus affords greater stability to the income and continued existence of the agricultural establishments.

372. **Railway Crossings with Asbestos-Cement Casing Pipes for Natural Gas Steel Pipelines.**
The following was applied by the Netherlands Railways with respect to the casing, viz:
1. The embankment must be protected against leakage (gas and liquids).
2. The railway traffic must be protected against gas explosions.
3. The traffic may not be obstructed during installation of and repairs to the pipe through the embankment.
4. The traffic load must be absorbed by the casing without deformation.
5. The casing pipe must prevent damage to the insulation of the transmission pipe.

375. **The Zurich Oberland Group Water Supply System.**
In 1966 the first step was taken with the merger of four regional group water supply schemes covering 27 communities. In the summer of 1977 a further decisive stage in construction work was commenced in the Zurich Oberland when work began on a second water supply pipeline to feed its own supply area as part of the overall scheme for the group's supply facilities.

374. **Protection of the Lake of Constance.**
Three New Waste Water Outfall Pipelines.
The special ≪Rhine Lake Constance≫ scheme, which commenced in 1977, is intended to bring the rehabilitation of Germany's largest inland lake to a successful conclusion. Gaps still existing in the facilities for maintaining the cleanliness of the upper and lower lake have now been eliminated by laying a further three, underwater pipelines into the lake.

375. **Some Remarks on the Design of Asbestos-Cement Pipes to Resist External Earth Loads.**

376. **Rehabilitation of Sewerage Network with Asbestos-Cement Pipes.**
In Heidelberg, below a street carrying tramway lines, a clay pipe sewer constructed in 1903 was damaged and had to be replaced. Since the street passes in front of the tramway depot, the pipes could not be replaced by opening up trenches. The town council therefore decided to construct a tunnel above the damaged sewer and to replace it with a new sewer consisting of class A asbestos-cement sewer pipes (800 mm bore) in lengths of 2·5 m. The pipes could not be longer since, they had to be swung in from a side drift.

ASARCO ALV 0006844