DIELECTRIC CONSTANT OF AROCLORS

Definitions

Condenser.

Any electrical conductor upon which an electrical charge can be stored is an electrical condenser.

Capacitance (Symbol Q)

An electrical condenser can be charged with a certain quantity of static electricity, depending upon its shape and size. This property is known as its capacitance, and the farad is the absolute unit used. For convenience the farad is subdivided into the micro-farad - symbol mF (Greek letter m), and the micromicrofarad-symbol mmF-. A farad is defined as the capacitance of a condenser such that one coulomb of electrical energy will produce a potential diff. of 1 volt between its terminals. A micro-farad is .000001 farad and a micromicro-farad is .000000000001 farad. The micromicro-farad is the only unit employed in Aroclor work.

Dielectric Constant.

The dielectric constant of any material is defined as the ratio of thecapacity of a condenser made up with a dielectric of the material in question to the capacity of the same, having air as the dielectric.

Apparatus

Heating Oven.

A Freas-thermo-electric oven, forced air, serial No. 621-61 is used for heating and maintaining the Aroclor at 100°C, the testing temperature.

Holes are drilled through the side of the oven to accomodate the terminal leads.

Standard Condenser, Cs

This condenser is a General Radio Precision Condenser, Type 222-L, Serial No. 1189. It has a fine worm gear vernier which permits the setting of this condenser to be read to a fraction of a micromicro-farad. The scale of the standard condenser is divided into 2500 parts by the vernier employed, and excepting the first three hundred divisions and last one hundred divisions, the capacity changes

STLCOPCB4078272

vary uniformly with change of setting. In other words it is almost a straight line condenser between settings of from 300 to 2400 divisions. Below setting of 300 and above 2400 the line is not straight due to edge effect encountered in engaging or disengaging the plates. The condenser should therefore be used between 300 and 2400 scale divisions (160-1450 mmf).

The condenser is supplied with its calibration chart showing micromicro-farad equivalence of scale divisions at each 100 difisions. From this chart, the accompanying chart is made, showing the capacitance equivalent for each possible scale setting (Fig. 3-)

Test Condenser, Cx.

This condenser is a multipleplate variable air condenser. Two such condensers are made part of the apparatus. One has a capacity of 250 mmf, and the other a capacity of 100 mmf., and each has its obvious range of usefulness.

The condenser is mounted (locally) in a rectangular metal case, open at the top, and should fit as snugly as possible. The rotor-shaft comes through the front plate of the box and a stuffing box, packed with asbestos twine. The purpose of this box is to contain the liquid sample around the plates of the condenser which should, at the time of testing, be completely submerged in the liquid (Aroclor).

Balancing Condenser, Ca)

This can be any type of air condenser with an effective capacity of 1500 mmf. A General Radio Type 246-L is used. A three plate midget air condenser is used in parallel with this condenser for vernier effect.

Capacity Bridge.

A General Radio Type 216 is used. This is the main part of the apparatus and furnishes the arms which make possible the balancing of the system. A resistance box is provided in connection with the bridge and can be used in either arm.

A. C. Source, O.

The source of A.C. is a General Radio pure sine wave audio oscillator, type 213-B, and is fed by a 6 volt storage battery.

DSW 331698

STLCOPCB4078273

Amplifier.

The amplifier consists of two stages of audio-frequency amplification, using two U.X. 201-A tubes, two audio transformers, and A, B, and c batteries. It is used for accentuating the null point or balance point.

Switches, Sw.

1. For connecting 6 volt storage battery to audio oscillator.

2. For connecting 6 volt storage battery and "B" battery to filament and plate of amplifier tubes.

3. For placing resistance box in either A or B arm of capacity bridge.

Batteries.

The two storage batteries used are Ford automobile batteries. The "B" battery is any convenient 45 volt block.

Battery Charger.

An A.C.-D.C. rectifier, Westinghouse, style 376793, is used for keeping the two storage batteries charged.

Hook Up

The accompanying wiring diagrams will make the hook-up clear

Procedure for Measurement

Test Condenser.

The difference in capacity between the plates opened and closed must be determined with as high degree of accuracy as possible. In this test air is used as the dielectric medium between the plates of the condenser. This constant will not change appreciably during the life of the condenser, but it is advisable to check it from time to time.

The test condenser is placed in the oven(at100°C) and allowed to come to temperature. This takes about 20 minutes. The terminals are connected to the leads from the apparatus by means of the clamps provided. The plates of the condenser are then turned to the closed(maximum capacity) position. The rotor-shaft will encounter a stop peg. Care must be taken not to turn the condenser plates too hard against this stop, as it might be bent, thus giving a false reading. Next, the standard condenser

STLCOPCB4078274

WIRING DIAGRAM FOR APPARATUS USED IN MEASURING CAPACITY

DETERMINATION OF DIELECTRIC CONSTANT

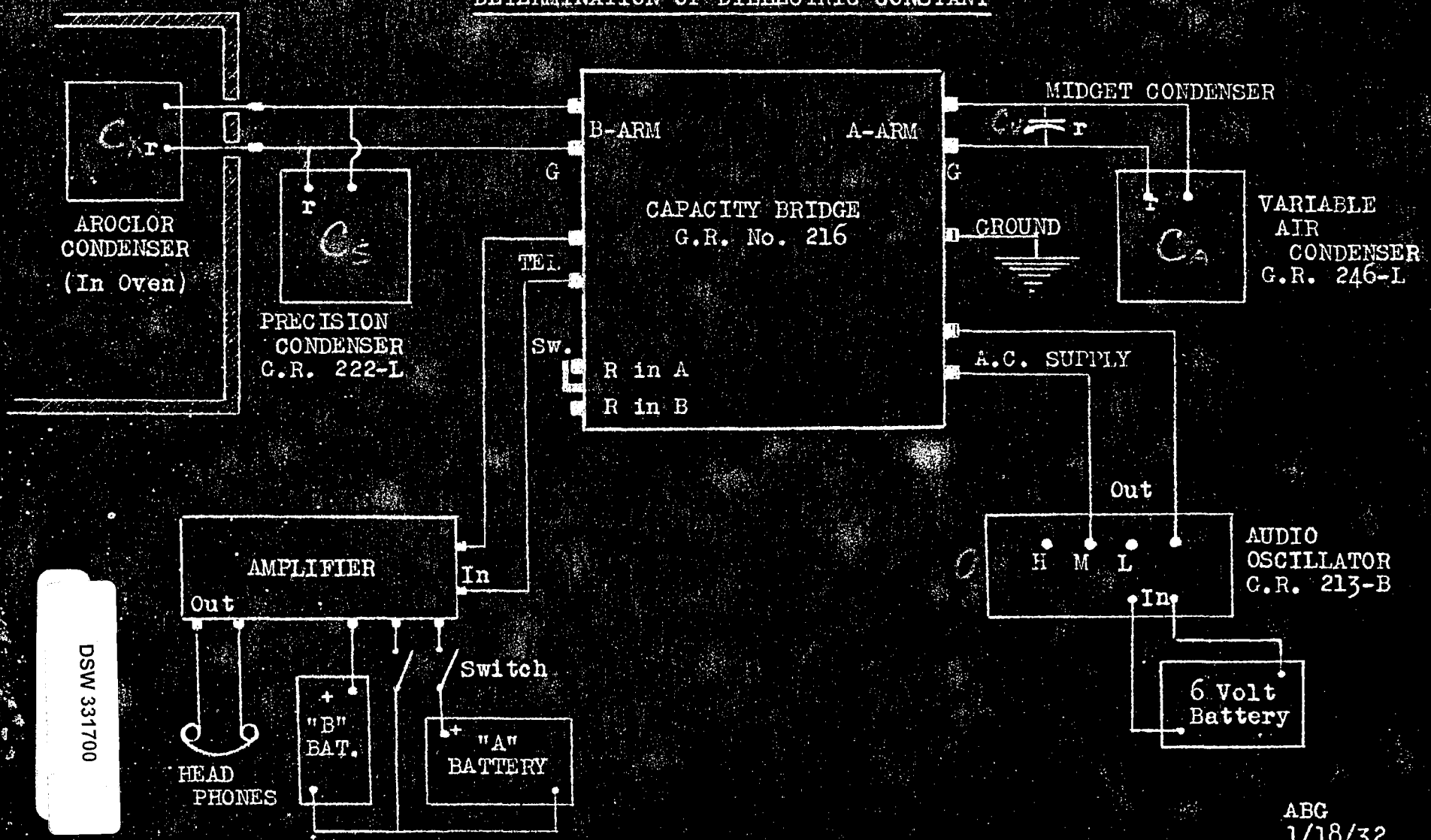

ABG
1/18/32

DSW 331700

STLCOPCB4078275

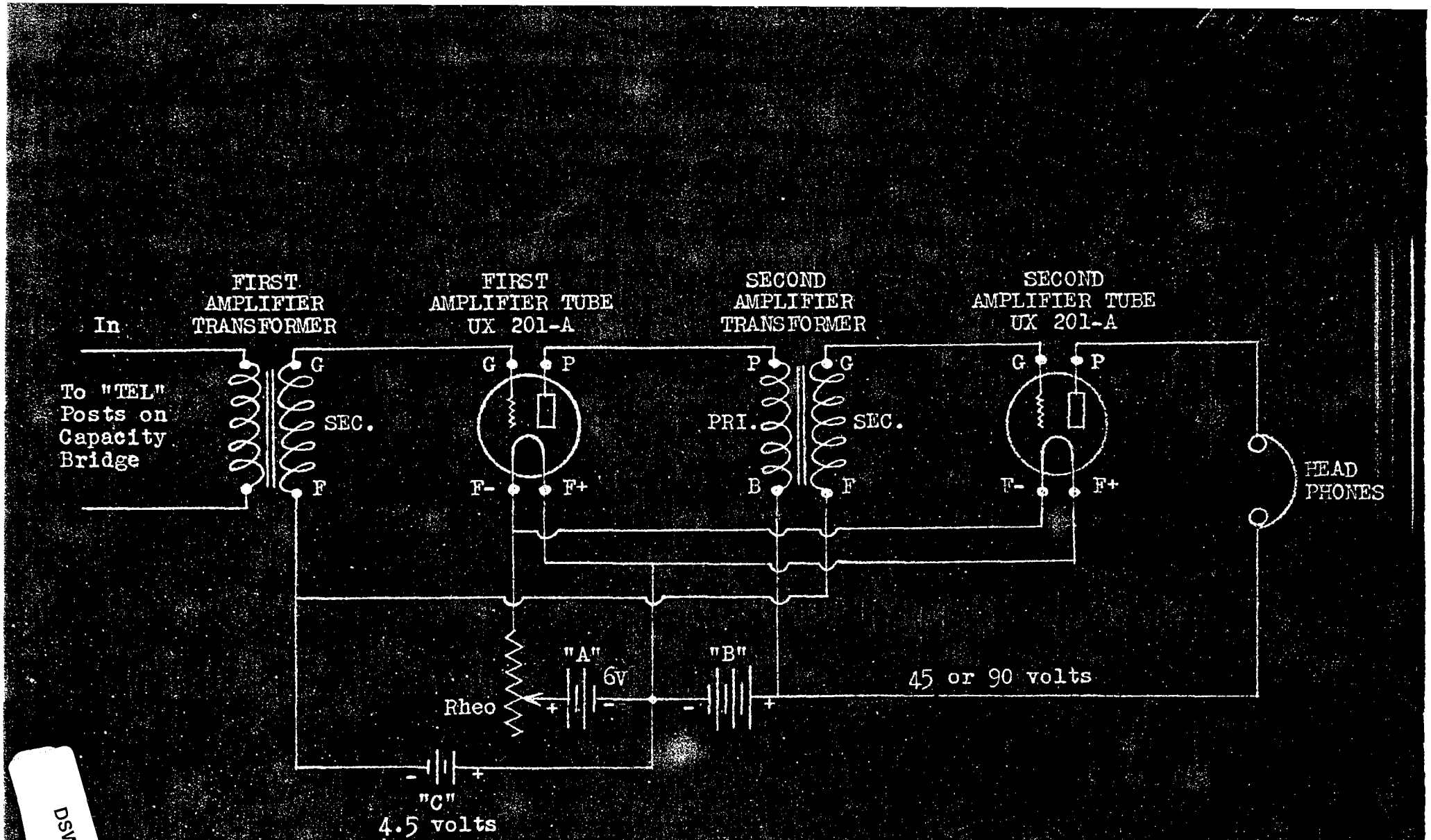

DSW 331701

CIRCUIT ARRANGEMENT OF TWO STAGE AMPLIFIER FOR USE WITH CAPACITY BRIDGE

APG 1/18/32

STLCOPCB4078276

is set at exactly 400. The two switches carrying the power supply from the batteries are now closed, and the tuning fork on the oscillator is pricked gently with finger nail to start it vibrating. As this is done, a loud note will be heard in the head-phones. Next, the balancing condenser, Ca, is turned until a minimum noise level is produced. This noise level is further reduced by moving the resistance controls and midget condenser simultaneously until the weakest signal is evident. The system is now said to be balanced, both with respect to the capacity, and resistance in each arm of the bridge. The reading on the standard condenser (400) is recorded.

Next, the test condenser is turned to its minimum (open) position, until the rotor-shaft is pressed against the stop. Now, without touching the balancing condenser or midget condenser, the standard condenser is turned toward a higher setting until another minimum noise level is reached. The fine balance is obtained this time by varying the standard condenser and resistance decades simultaneously. When a balance is reached the reading is recoreded from from the standard condenser as before. Only these two readings (400 and the last) are necessary for computing the capacity of the difference in position of the plates of the testing condenser. The change in resistance necessary is immaterial. The second reading will be found to be about 150 divisions higher for the 250 mmf condenser and about 60 divisions higher for the 100 mmf condenser.

The entire above procedure is repeated, using the second reading for the next initial setting etc. until the range from 400 to 2200 scale divisions is covered.

Each pair of readings is then translated into mmf. as shown under "Calculations", and the smaller subtracted from the larger to obtain the capacitance difference for minimum and maximum settings of test condenser using air as the dielectric medium. The differences thus found are averaged to give the correct constant for the range covered.

Testing Samples.

The Aroclor is poured into the condenser until it just covered the plates. The condenser is then placed in the oven and allowed to remain there two hours before making the test, so that it will come to 100°C, the testing temperature. Exactly the same procedure is used as in determining the condenser constant, except that only two determinations are taken as checks because the initial balance will be separated from the final balance by well over half the useful scale on

STLCOPCB4078277

the standard condenser. If the first initial reading is 400, the next initial reading should be somewhere near 500, or perhaps 600, depending, of course, on the nature of the substance under examination.

Also, the original setting can be the high one provided the test condenser is at its minimum (open)setting. Even numbers given above are for example purposes and do not have to be used, but are more convenient for calculations.

Calculations.

When condensers are connected in parallel, the following formula obtains:

$$Q \text{ (total capacity)} = (q_1 + q_2 + q_n) \text{ sum of each}$$

In this method the total capacity consists of Cs + Cx + Ca. Since Ca stays constant., and Cs can be found, Cx can also be found by subtracting the initial Cs from the final Cs.

With the initial and final scale reading at hand it is only necessary to consult the chart to obtain the equivalent mmf; the smaller is subtracted from the larger to obtain the difference in mmf.

This difference, when taken with the liquid in the condenser is divided by the constant for testing condenser (diff. with air in the condenser) to obtain the ratio referred to in the definition of D.C., i.e., the dielectric constant of the material in question.

Example.

	Scale	mmf.(from chart)
Final reading	2194	1294
Initial	400	218
Difference		1076

Constant for testing condenser = 250
Therefore, D.C. $\frac{1076}{250}$ = 4.31

DSW 331703

STLCOPCB4078278

Notes

1. About 750 cc of sample are necessary for a test.

2. A hydrometer is provided for testing the storage batteries from time to time.

3. The batteries should be disconnected from the rest of the set when charging. Failure to do this will cause a fuse to blow out.

4. For D.C. measurement the sample may be heated to 100°C on a hot plate and then poured into the condenser without any loss in accuracy.

5. A cover is provided for the apparatus and should be kept in place whenever the apparatus is not in use.

6. If there is any "cracking" sound in the receivers the tubes should be tested by a reliable Radio shop. All connections and contacts should be kept as free as possible from dirt and grease.

JLB-hp
5/3/34

DSW 331704

STLCOPCB4078279

EQUIVALENCE OF SCALE READING IN MMF. FOR STANDARD CALIBRATED CONDENSER : G. R. 221-A1819

400 - 899

Scale Reading	0	1	2	3	4	5	6	7	8	9
40	218.0	218.6	219.2	219.8	220.4	221.0	221.6	222.2	222.8	223.4
41	223.9	224.5	225.1	225.7	226.3	226.9	227.5	228.1	228.7	229.3
42	229.8	230.4	231.0	231.6	232.2	232.8	233.4	234.0	234.6	235.2
43	235.7	236.3	236.9	237.5	238.1	238.7	239.3	239.8	240.4	241.0
44	241.6	242.2	242.8	243.4	244.0	244.6	245.2	245.8	246.3	246.9
45	247.5	248.1	248.7	249.3	249.9	250.5	251.1	251.6	252.2	252.8
46	253.4	254.0	254.6	255.2	255.8	256.4	257.0	257.6	258.1	258.7
47	259.3	259.9	260.5	261.1	261.7	262.3	262.9	263.5	264.0	264.6
48	265.2	265.8	266.4	267.0	267.6	267.2	268.8	269.4	269.9	270.5
49	271.1	271.7	272.3	272.9	273.5	274.1	274.7	275.3	275.8	276.4
50	277.0	277.6	278.2	278.8	279.4	280.0	280.6	281.1	281.7	282.3
51	282.8	283.4	284.0	284.6	285.2	285.7	286.3	286.9	287.5	288.1
52	288.6	289.2	289.8	290.4	291.0	291.5	292.1	292.7	293.3	293.9
53	294.4	295.0	295.6	296.2	296.8	297.3	297.9	298.5	299.1	299.7
54	300.2	300.8	301.4	302.0	302.6	303.1	303.7	304.3	304.9	305.5
55	306.0	306.6	307.2	307.8	308.4	308.9	309.6	310.1	310.7	311.3
56	311.8	312.4	313.0	313.6	314.2	314.7	315.3	315.9	316.5	317.1
57	317.6	318.2	318.8	319.4	320.0	320.5	321.1	321.7	322.3	322.9
58	323.4	324.0	324.6	325.2	325.8	326.3	326.9	327.5	328.1	328.7
59	329.2	329.8	330.4	331.0	331.6	332.1	332.7	333.3	333.9	334.5
60	335.0	335.6	336.2	336.8	337.4	338.0	338.6	339.2	339.9	340.5
61	341.1	341.7	342.3	342.9	343.5	344.1	344.7	345.4	346.0	346.6
62	347.2	347.8	348.4	349.0	349.6	350.2	350.8	351.5	352.1	352.7
63	353.3	353.9	354.5	355.1	355.7	356.3	356.9	357.6	358.2	358.8
64	359.4	360.0	360.6	361.2	361.8	362.4	363.1	363.7	364.3	364.9
65	365.5	366.1	366.7	367.3	367.9	368.6	369.2	369.8	370.9	371.0
66	371.6	372.2	372.8	373.4	374.0	374.6	375.3	375.9	376.5	377.1
67	377.7	378.3	378.9	379.5	380.1	380.7	381.4	382.0	382.6	383.2
68	383.8	384.4	385.0	385.6	386.2	386.8	387.5	388.1	388.7	389.3
69	389.9	390.5	391.1	391.7	392.3	392.9	393.6	394.2	394.8	395.4
70	396.0	396.6	397.2	397.8	398.4	399.0	399.6	400.2	400.8	401.3
71	401.9	402.5	403.1	403.7	404.3	404.9	405.5	406.1	406.7	407.3
72	407.8	408.4	409.0	409.6	410.2	410.8	411.4	412.0	412.6	413.2
73	413.7	414.3	414.9	415.6	416.1	416.7	417.3	417.9	418.5	419.1
74	419.6	420.2	420.8	421.4	422.0	422.6	423.2	423.8	424.4	425.0
75	425.5	426.1	426.7	427.3	427.9	428.5	429.1	429.7	430.3	430.9
76	431.4	432.0	432.6	433.2	433.8	434.4	435.0	435.6	436.2	436.7
77	437.3	437.9	438.6	439.1	439.7	440.3	440.9	441.5	442.1	442.7
78	443.2	443.8	444.4	445.0	445.6	446.2	446.8	447.4	448.0	448.6
79	449.1	449.7	450.3	450.9	451.5	452.1	452.7	453.2	453.9	454.5
80	455.0	455.6	456.2	456.8	457.4	458.0	458.6	459.2	459.8	460.4
81	461.0	461.6	462.2	462.8	463.4	464.0	464.6	465.2	465.8	466.4
82	467.0	467.6	468.2	468.8	469.4	470.0	470.6	471.2	471.8	472.4
83	473.0	473.6	474.2	474.8	475.4	47610	476.6	477.2	477.8	478.4
84	479.0	479.6	480.2	480.8	481.4	482.0	482.6	483.2	483.8	484.4
85	485.0	485.6	486.2	486.8	487.4	488.0	488.6	489.2	489.8	490.4
86	491.0	491.6	492.2	492.8	493.4	494.0	494.6	495.2	495.8	496.4
87	497.0	497.6	498.2	498.8	496.4	500.0	500.6	501.2	501.8	502.4
88	503.0	503.6	504.2	504.8	505.4	506.0	506.6	507.2	507.8	508.4
89	509.0	509.6	510.2	510.8	511.4	512.0	512.6	513.2	513.8	514.4

DSW 331705

STLCOPCB4078280

EQUIVALENCE OF SCALE READING IN MMF. FOR STANDARD CALIBRATED CONDENSER : G.R. 221 - #1819

900 - 1399

Scale Reading	0	1	2	3	4	5	6	7	8	9
90	515.0	515.6	516.2	516.8	517.4	518.0	518.6	519.2	519.8	520.4
91	521.0	521.6	522.2	522.8	523.4	524.0	524.6	525.2	525.8	526.4
92	527.0	527.6	528.2	528.8	529.4	530.0	530.6	531.2	531.8	532.4
93	533.0	533.6	534.2	534.8	535.4	536.0	536.6	537.2	537.8	538.4
94	539.0	539.6	540.2	540.8	541.4	542.0	542.6	543.2	543.8	544.4
95	545.0	545.6	546.2	546.8	547.4	548.0	548.6	549.2	549.8	550.4
96	551.0	551.6	552.2	552.8	553.4	554.0	554.6	555.2	555.8	556.4
97	557.0	557.6	558.2	558.8	559.4	560.0	560.6	561.2	561.8	562.4
98	563.0	563.6	564.2	564.8	565.4	566.0	566.6	567/2	567.8	568.4
99	569.0	569.6	570.2	570.8	571.4	572.0	572.6	573.2	573.8	574.4
100	575.0	575.6	576.2	576.8	577.4	578.0	578.6	579.2	579.8	580.4
101	581.0	581.6	582.2	582.8	583.4	584.0	584.6	585.2	585.8	586.4
102	587.0	587.6	588.2	588.8	589.4	590.0	590.6	591.2	591.8	592.4
103	593.0	593.6	594.2	594.8	595.4	596.0	596.6	597.2	597.8	598.4
104	599.0	599.6	600.2	600.8	601.4	602.0	602.6	603.2	603.8	604.4
105	605.0	605.6	606.2	606.8	607.4	608.0	608.6	609.2	609.8	610.4
106	611.0	611.6	612.2	612.8	613.4	614.0	614.6	615.2	615.8	616.4
107	617.0	617.6	618.2	618.8	619.4	620.0	620.6	621.2	621.8	622.4
108	623.0	623.6	624.2	624.8	625.4	626.0	626.6	627.2	627.8	628.4
109	629.0	629.6	630.2	630.8	631.4	632.0	632.6	633.2	633.8	634.4
110	635.0	635.6	636.2	636.8	637.4	638.0	638.6	639.2	639.8	640.4
111	641.0	641.6	642.2	642.8	643.4	644.0	644.6	645.2	645.8	646.4
112	647.0	647.6	648.2	648.8	649.4	650.0	650.6	651.2	651.8	652.4
113	653.0	653.6	654.2	654.8	655.4	656.0	656.6	657.2	657.8	658.4
114	659.0	659.6	660.2	660.8	661.4	662.0	662.6	663.2	663.8	664.4
115	665.0	665.6	666.2	666/8	667.4	668.0	668.6	669.2	669.8	670.4
116	671.0	671.6	672.2	672.8	673.4	674.0	674.6	675.2	675.8	676.4
117	677.0	677.6	678.2	678.8	679.4	680.0	680.6	681.2	681.8	682.4
118	683.0	683.6	684.2	684.8	685.4	686.0	686.6	687.2	687.8	688.4
119	689.0	689.6	690.2	690.8	691.4	692.0	692.6	693.2	693.8	694.4
120	695.0	695.6	696.2	696.8	697.4	698.0	698.6	699.2	699.8	700.4
121	701.0	701.6	702.2	702.8	703.4	704.0	704.6	705.2	705.8	706.4
122	707.0	707.6	708.2	708.8	709.4	710.0	710.6	711.2	711.8	712.4
123	713.0	713.6	714.2	714.8	715.4	716.0	716.6	717.2	717.8	718.4
124	719.0	719.6	720.2	720.8	721.4	722.0	722.6	723.2	723.8	724.4
125	725.0	725.6	726.2	726.8	727.4	728.0	728.6	729.2	729.8	730.4
126	731.0	731.6	732.2	732.8	733.4	734.0	734.6	735.2	735.8	736.4
127	737.0	737.6	738.2	738.8	739.4	740.0	740.6	741.2	741.8	742.4
128	743.0	743.6	744.2	744.8	745.4	746.0	746.6	747.2	747.8	748.4
129	749.0	749.6	750.2	750.8	751.4	752.0	752.6	753.2	753.8	754.4
130	755.0	755.6	756.2	756.8	757.4	758.0	758.6	759.2	759.8	760.4
131	761.0	761.6	762.2	762.8	763.4	764.0	764.6	765.2	765.8	766.4
132	767.0	767.6	768.2	768.8	769.4	770.0	770.6	771.2	771.8	772.4
133	773.0	773.6	774.2	774.8	775.4	776.0	776.6	777.2	777.8	778.4
134	779.0	779.6	780.2	780.8	781.4	782.0	782.6	783.2	783.8	784.4
135	785.0	785.6	786.2	786.8	787.4	788.0	788.6	789.2	789.8	790.4
136	791.0	791.6	792.2	792.8	293.4	294.0	794.6	795.2	795.8	796.4
137	797.0	797.6	798.2	798.8	799.4	800.0	800.6	801.2	801.8	802.4
138	803.0	803.6	804.2	804.8	805.4	806.0	806.6	807.2	807.8	808.4
139	809.0	809.6	810.2	810.8	811.6	812.0	812.6	813.2	813.8	814.4

DSW 331706

STLCOPCB4078281

EQUIVALENCE OF SCALE READING IN MMF. FOR STANDARD CALIBRATED CONDENSER : G.R. 221 - #1819

1400 - 1899

Scale Reading	0	1	2	3	4	5	6	7	8	9
140	815.0	815.6	816.2	816.8	817.4	818.0	818.6	819.2	819.8	820.4
141	821.0	821.6	822.2	822.8	823.4	824.0	824.6	825.2	825.8	826.4
142	827.0	827.6	828.2	828.8	829.4	830.0	830.6	831.2	831.8	832.4
143	833.0	833.6	834.2	834.8	835.4	836.0	836.6	837.2	83718	838.4
144	839.0	839.6	840.2	840.8	841.4	842.0	842.6	843.2	843.8	844.4
145	845.0	845.6	846.2	846.8	847.4	848.0	848.6	849.2	849.8	850.4
146	851.0	851.6	852.2	852.8	853.4	854.0	854.0	855.2	855.8	856.4
147	857.0	857.6	858.2	858.8	859.4	860.0	860.6	861.2	861.8	862.4
148	863.0	863.6	864.2	864.8	865.4	866.0	866.6	867.2	867.8	868.4
149	869.0	869.6	870.2	870.8	871.4	872.0	872.6	873.2	873.8	874.4
150	875.0	875.6	876.2	876.8	877.4	878.0	878.6	879.2	879.8	880.4
151	881.0	881.6	882.2	882.8	883.4	884.0	884.6	885.2	885.8	886.4
152	887.0	887.6	888.2	888.8	889.4	890.0	890.6	891.2	891.8	892.4
153	893.0	893.6	894.2	894.8	895.4	896.0	896.6	897.2	897.8	898.4
154	899.0	899.6	900.2	900.8	901.4	902.0	902.6	903.2	903.8	904.4
155	905.0	905.6	906.2	906.8	907.4	908.0	908.6	909.2	909.8	910.4
156	911.0	911.6	912.2	912.8	913.4	914.0	914.6	915.2	915.8	916.4
157	917.0	917.6	918.2	918.8	919.4	920.0	920.6	921.2	921.8	922.4
158	923.0	923.6	924.2	924.8	925.4	926.0	926.6	92712	927.8	928.4
159	929.0	929.6	930.2	930.8	931.4	932.0	932.6	933.2	933.8	934.4
160	935.0	935.6	936.2	936.8	937.4	938.0	938.6	939.2	939.8	940.4
161	941.0	941.6	942.2	942.8	943.4	944.0	944.6	945.2	945.8	946.4
162	947.0	947.6	948.2	948.8	949.4	950.0	950.6	951.2	951.8	952.4
163	953.0	953.6	954.2	954.8	955.4	956.0	956.6	957.2	957.8	958.4
164	959.0	959.6	960.2	960.8	961.4	962.0	962.6	963.2	963.8	964.4
165	965.0	965.6	966.2	966.8	967.4	968.0	968.6	969.2	969.8	970.4
166	971.0	971.6	972.2	972.8	973.4	974.0	974.6	975.2	975.8	976.4
167	977.0	977.6	978.2	978.8	979.4	980.0	980.6	981.2	981.8	982.4
168	983.0	983.6	984.2	984.8	985.4	986.0	986.6	987.2	987.8	988.4
169	989.0	989.6	990.2	990.8	991.4	992.0	992.6	993.2	993.8	994.4
170	995.0	995.6	996.2	996.8	997.4	998.0	998.6	999.2	999.8	1000.4
171	1001.0	1001.6	1002.2	1002.8	1003.4	1004.0	1004.6	1005.2	1005.8	1006.4
172	1007.0	1007.6	1008.2	1008.8	1009.4	1010.0	1010.6	1011.2	1011.8	1012.4
173	1013.0	1013.6	1014.2	1014.8	1015.4	1016.0	1016.6	1017.2	1017.8	1018.4
174	1019.0	1019.6	1020.2	1020.8	1021.4	1022.0	1022.6	1023.2	1023.8	1024.4
175	1025.0	1025.6	1026.2	1026.8	1027.4	1028.0	1028.6	1029.2	1029.8	1030.4
176	1031.0	1031.6	1032.2	1032.8	1033.4	1034.0	1034.6	1035.2	1035.8	1036.4
177	1037.0	1037.6	1038.2	1038.8	1039.4	1040.0	1040.6	1041.2	1041.8	1042.4
178	1043.0	1043.6	1044.2	1044.8	1045.4	1046.0	1046.6	1047.2	1047.8	1048.4
179	1049.0	1049.6	1050.2	1050.8	1051.4	1052.0	1052.6	1053.2	1053.8	1054.4
180	1055.0	1055.6	1056.2	1056.8	1057.4	1058.0	1058.6	1059.2	1059.8	1060.4
181	1061.0	1061.6	1062.2	1062.8	1063.4	1064.0	1064.6	1065.2	1065.8	1066.4
182	1067.0	1067.6	1068.2	1068.8	1069.4	1070.0	1070.6	1071.2	1071.8	1072.4
183	1073.0	1073.6	1074.2	1074.8	1075.4	1076.0	1076.6	1077.2	1077.8	1078.4
184	1079.0	1079.6	1080.2	1080.8	1081.4	1082.0	1082.6	1083.2	1083.8	1084.4
185	1085.0	1085.6	1086.2	1086.8	1087.4	1088.0	1088.6	1089.2	1089.8	1090.4
186	1091.0	1091.6	1092.2	1092.8	1093.4	1094.0	1094.6	1095.2	1095.8	1096.4
187	1097.0	1097.6	1098.2	1098.8	1099.4	1100.0	1100.6	1101.2	1101.8	1102.4
188	1103.0	1103.6	1104.2	1104.8	1105.4	1106.0	1106.6	1107.2	1107.8	1108.4
189	1109.0	1109.6	1110.2	1110.8	1111.6	1112.0	1112.6	1113.2	1113.8	1114.4

DSW 331707

STLCOPCB4078282

EQUIVALENCE OF SCALE READING IN MMF, FOR STANDARD CALIBRATED CONDENSER ; G.R. 22L - #1819

1900 - 2200

Scale Reading	0	1	2	3	4	5	6	7	8	9
190	1116.0	1116.6	1117.2	1117.8	1118.4	1119.0	1119.6	1120.2	1120.8	1121.
191	1122.0	1122.6	1123.2	1123.8	1124.4	1125.0	1125.6	1126.2	1126.8	1127.
192	1128.0	1128.6	1129.2	1129.8	1130.4	1131.0	1131.6	1132.2	1132.8	1133.
193	1134.0	1134.6	1135.2	1135.8	1136.4	1137.0	1137.6	1138.2	1138.8	1139.
194	1140.0	1140.6	1141.2	1141.8	1142.4	1143.0	1143.6	1149.2	1144.8	1145.
195	1146.0	1146.6	1147.2	1147.8	1148.4	1149.0	1149.6	1150.2	1150.8	1151.
196	1152.0	1152.6	1153.2	1153.8	1154.4	1155.0	1155.6	1156.2	1156.8	1157.
197	1158.0	1158.6	1159.2	1159.8	1160.4	1161.0	1161.6	1162.2	1162.8	1163.
198	1164.0	1164.6	1165.2	1165.8	1166.4	1167.0	1167.6	1168.2	1168.8	1169.
199	1170.0	1170.6	1171.2	1171.8	1172.4	1173.0	1173.6	1174.2	1174.8	1175.
200	1176.0	1176.6	1177.2	1177.8	1178.4	1179.0	1179.7	1180.2	1180.9	1181.
201	1182.1	1182.7	1183.3	1183.9	1184.5	1185.1	1195.8	1186.4	1187.0	1187.
202	1188.2	1188.8	1184.4	1190.0	1190.6	1191.2	1191.9	1192.5	1193.1	1193.
203	1194.3	1194.9	1195.5	1196.1	1196.7	1197.4	1198.0	1198.6	1199.2	1199.
204	1200.4	1201.1	1201.6	1202.2	1202.8	1203.5	1204.1	1204.7	1205.3	1205.
205	1206.5	1207.1	1207.7	1208.3	1208.9	1209.6	1210.2	1210.8	1211.4	1212.
206	1212.6	1213.2	1213.8	1214.4	1215.0	1215.7	1216.3	1216.9	1217.5	1218.
207	1218.7	1219.3	1219.9	1220.5	1221.1	1221.8	1222.4	1223.0	1223.6	1224.
208	1224.8	1225.4	1226.0	1226.6	1227.2	1227.9	1228.5	1229.1	1229.7	1230.
209	1230.9	1231.5	1232.1	1232.7	1233.3	1234.0	1234.6	1235.2	1235.8	1236.
210	1237.0	1237.6	1238.2	1238.8	1239.4	1240.0	1240.6	1241.2	1241.8	1242.
211	1243.0	1243.6	1244.2	1244.8	1245.4	1246.0	1246.6	1247.2	1247.8	1248.
212	1249.0	1249.6	1250.2	1250.8	1251.4	1252.0	1252.6	1253.2	1253.8	1254.
213	1255.0	1255.6	1256.2	1256.8	1257.4	1258.0	1258.6	1259.2	1259.8	1260.
214	1261.0	1261.6	1262.2	1262.9	1263.4	1264.0	1264.6	1265.2	1265.8	1266.
215	1267.0	1267.6	1268.2	1268.9	1269.4	1270.0	1270.6	1271.2	1271.8	1272.
216	1273.0	1273.6	1274.2	1274.8	1275.4	1276.0	1276.6	1277.2	1277.8	1278.
217	1279.0	1279.6	1280.2	1280.8	1281.4	1282.0	1282.6	1283.2	1283.8	1284.
218	1285.0	1285.6	1286.2	1286.8	1287.4	1288.0	1288.6	1289.2	1289.8	1290.
219	1291.0	1291.6	1292.2	1292.8	1293.4	1294.0	1294.6	1295.2	1295.8	1296.
220	1297.0									
221	1309	1310	1310.6	1311.2	1311.8					
222	1304.0	1309.6	1310.2	1310.8						
223	1315.0	1315.6	1316.2	1316.8						
224										
225										
226										
227	1339									
228										
229										

1297 1305 2190 1297 18 1305 1319.2 1297 174 471 218 1253 249 19.4 6 29 5 1741

DSW 331708

POWER FACTOR

Definitions.

When condensers are used on A.C. circuits there is an energy loss in the dielectric. This loss arises through the repeated cycle of changes of electric flux through which the dielectric is taken by applied alternating voltage. This loss increases with the frequency; hence, the frequency has to be reported with the result. It also varies with the temperature of the condenser, and hence this also must be reported as part of result.

The "Power Factor" is the ratio of all energy losses in a dielectric to the "apparent power" in the dielectric. It is usually expressed in percentage.

In the test to be described the standard temperature used is 100°C, and the standard frequency is 1000 cycles per second. Hence, it is not necessary to include these habitual constants in reporting results.

Power Factor Determination

Inasmuch as the same equipment is used for measuring power factor as dielectric constant, the method will be outlined, making reference to that method.

Apparatus.

The apparatus is the same as that used in dielectric constant measurement except for the testing cell. A drawing of the cell is attached (Fig. 4). It consists of 2 cylinders of the dimensions shown and is contained in an 800 cc Griffin Beaker. In the assembly the beaker containing the cell is placed in the oven in the same place as the dielectric constant condenser, and is connected to the same leads. Due to fact that the test is affected appreciably by small amounts of stray currents, the 800 cc beaker is insulated from the iron floor by means of a glass "Y" stilt, upon which it stands, and the inner electrode is suspended from a ring stand by means of a glass stirring rod, passed through a cork, and "hooked" at the bottom. The wire loop passing through the vertical rod of the inner electrode is hung on this glass hook.

Method of measurement.

To measure the Power Factor of an Aroclor, the test cell is filled about two thirds full of the liquid, and the leads connected, as in dielectric constant measurement. The standard condenser is set on about 1600 scale reading and the system brought to balance as directed in the dielectric constant procedure. The Cs reading and also the resistance reading are noted. The one

STLCOPCB4078284

of the leads is disconnected outside the oven, care being taken to more the two ends as little as possible from their connected position, and the system again brought to balance by manipulating only the standard condenser and resistance decades. The new readings -Cs_s and R_1 are noted.

Calculations.

The equation for 1° F. as obtained by our instruments is:

$$P.F. = (R_1 - R_s)(Cs_s)^2 \times 2\pi f \times 10^{-10}$$

R_s = Resistance reading corresponding to Cs_s.
R_1 = Resistance reading corresponding to Cs_1.
Cs_s = Largest reading (in mmf.) on std. condenser.
Cs_1 = Smallest reading (in mmf.) on std. condenser.
f = Frequency in cycles per second.

Example.

Cs_1 = 1600 scale reading = 935.0 mmf.
Cs_s = 1981 scale reading = 1164.6 mmf.
R_1 = 180 ohms (reading on decades)
R_s = 105 ohms (reading on decades)
f = 1000 c.p.s.

$$P.F. = \frac{(180-105)(1164.6)^2 \times 6.28 \times 1000}{1164.6 - 935}$$

$$= \frac{75 \times 1{,}354{,}000 \times 62{,}800 \times 10^{-10}}{229.6} = 2.78\%$$

(Slide rule)

(1) The inner electrode should be suspended as nearly as possible in the center of the outer electrode.

(2) If $R_1 - R_s$ is negative, the means that the power factor is so low that it is within the lower limit of measurement (.02%) of the apparatus. In this case it is reported as 0.

(3) The same general notes under dielectric constant also apply to power factor.

JLB-hp
5/21/34

DSW 331710

STLCOPCB4078285