AMERICAN STANDARD

VP OIL BOILER

INSTRUCTION MANUAL

PACKAGED OIL HEATING UNITS

IMPORTANT - SEE INSTRUCTION MANUAL FOR PROPER LOCATION OF BOILER AND REMOVAL OF CRATE

NOTICE TO INSTALLER AND OPERATOR
THIS BOOKLET MUST BE AFFIXED ON OR ADJACENT TO THE HEATING EQUIPMENT.

FORM NO. 32425-06

PLAINTIFF'S EXHIBIT
tabbies
ASI-351

SERIES NO. 1B-J2

To the homeowner:

The American-Standard boiler which has been installed for you is the heart of your hydronic heating system. Since the performance of your system depends upon the boiler, it has been designed to operate at maximum efficiency. Advanced design, precision engineering, and modern manufacturing techniques are combined in this product to provide you with comfort at a low operating cost and with a minimum of maintenance.

The boiler sections are cast in iron--a metal resistant to corrosion, especially in a closed system. If this boiler is part of a new installation, it is joined in a closed system--i.e., normally water is neither lost nor added--and should not be drained. The replacement of water adds oxygen to the system; corrosive action continues until that oxygen is consumed; but, certainly, the boiler should not be fired without an adequate supply of water. On the other hand, if the boiler is not used during the winter months, it must be drained to prevent damage caused by freezing.

By following the suggestions contained in this manual, you can assume your boiler will function properly for many years. Should any problem arise, contact your nearest American-Standard contractor, whose name can be found in the "yellow pages" of your telephone directory.

AMERICAN-STANDARD

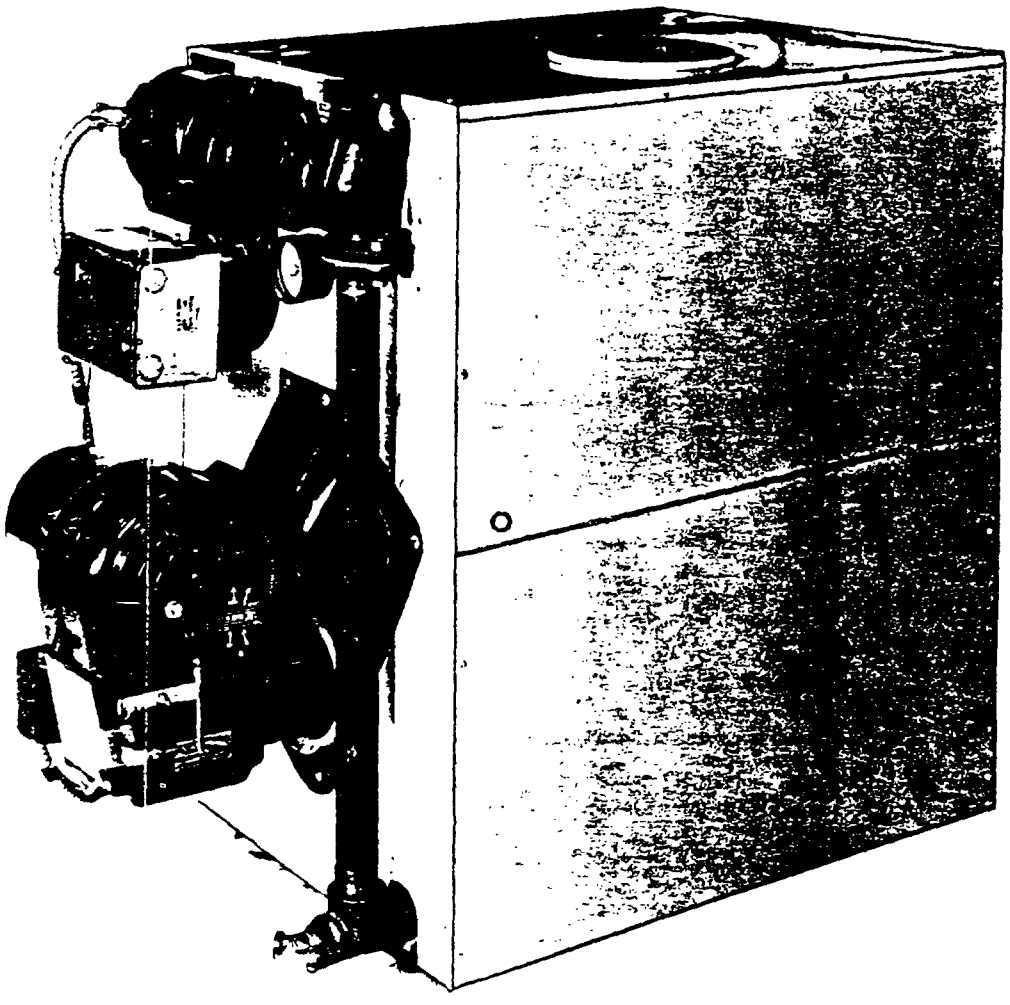

The VP Packaged Boiler comes to you pre-assembled; the installers major responsilility will be in locating, connecting accessory parts and performing the actual hookup.

GENERAL INFORMATION

The VP Packaged Boiler has been tested and approved by I=B=R as an oil-fired unit.

The VP Packaged Boiler comes with three, four or five sections. I=B=R ratings and data are included in Table I.

LOCATING BOILER FOR INSTALLATION

The boiler should be located on a level floor as near the chimney as possible. Be sure that sufficient space is allowed at the front (at least a 20" clearance) to allow for removal of the water heater. Cleaning space (approximately 24") should also be allowed at the right side of the boiler.

If a water condition exists in the basement, or it has been necessary to waterproof the basement floor, the boiler should be mounted on a concrete or hollow tile base (preferable height of 3").

UNPACKING VP PACKAGED BOILER

Locate the boiler near its final installation site before removing its crate. Unpacking should be accomplished as follows: (See Figs. 1 and 2)

1. Unfasten all crating wire at the corner of the crate.
2. Remove nails fastening crate sides to top and bottom of crate.
3. Lift off crate top and unwrap crate side from crate base.
4. After removal of the plastic bag, remove and discard the short nipple from the flow tapping at top of boiler.
5. Remove box containing draft stabilizer, relief valve, and miscellaneous parts.

EXPANSION TANK LOCATION

Care should be taken in locating the expansion tank. It should not be set in a cold or exposed space. If the pipe to or from the tank were to freeze, serious damage could result. It is also preferable to use a minimum of horizontal run piping to the expansion tank to facilitate free communication from the boiler to the tank.

TABLE 1

RATINGS & DATA

NO. OF SECTIONS	MODEL NUMBER	BURNER USED	I=B=R BURNER CAPACITY (gph)	NOZZLE USED	I=B=R GROSS OUTPUT (Mbh)	NET INSTLD. RAD.-WATER (Mbh)	TANKLESS HEATER NUMBER	* TANKLESS HEATER RATING (GPM)	I=B=R NOMINAL CHIMNEY SIZE
3	VP-115	DH-4F1	1.05	1.00/80 ES	115.0	100.0	130	3-1/2	8" x 8" x 15'
	VP-130	DH-4F1	1.15	1.10/80 ES	130.0	113.0	130	3-1/2	8" x 8" x 15'
	VP-140	DH-4F1	1.25	1.25/80 ES	140.0	121.7	130	3-1/2	8" x 8" x 15'
4	VP-170	DH-5F2	1.50	1.50/80 ES	170.0	147.8	131	4-3/4	8" x 8" x 15'
	VP-190	DH-5F2	1.70	1.65/80 B	190.0	165.2	131	4-3/4	8" x 8" x 15'
5	VP-230	DH-5F3	2.05	2.00/70 R	230.0	200.0	132	6	8" x 8" x 15'
	VP-250	DH-5F3	2.25	2.25/70 R	250.0	217.4	132	6	8" x 12" x 15'

NOTE: Boilers with Tankless Heaters will carry the suffix "T" (i.e. - "VPT")

* Heater Ratings are commercial ratings - gallons per minute of water heated from 40F to 140F with 200F boiler water.

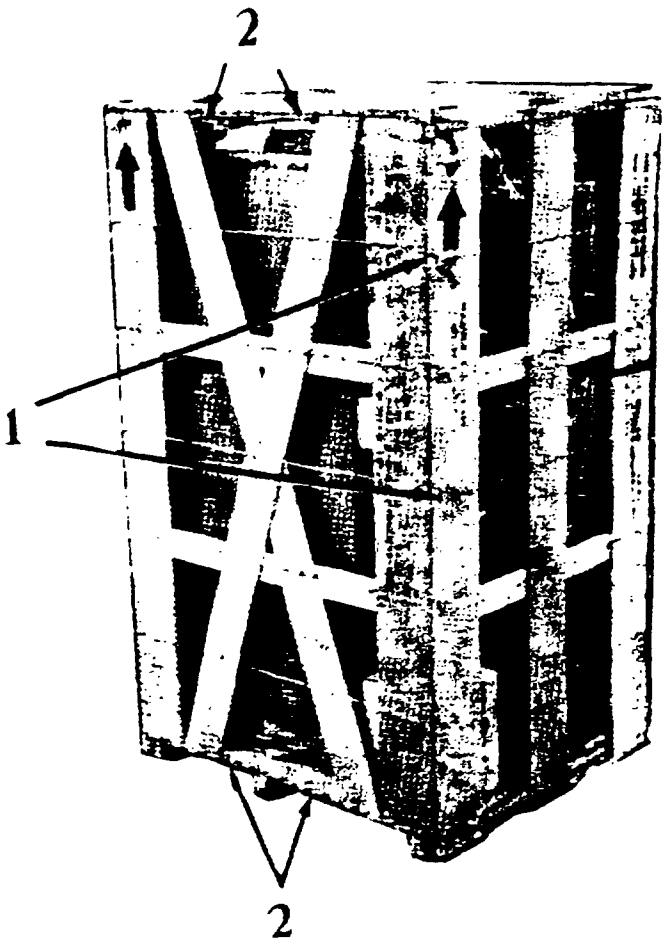

1. Side Fasteners
2. Nails

FIG. 1

1. Remove four nuts securing boiler to the crate base from below. Remove bolts on left side. Bolts on right side can then be pushed up inside the jacket where they will stay. This is important to prevent damaging jacket when removing boiler from base.

FIGURE 2

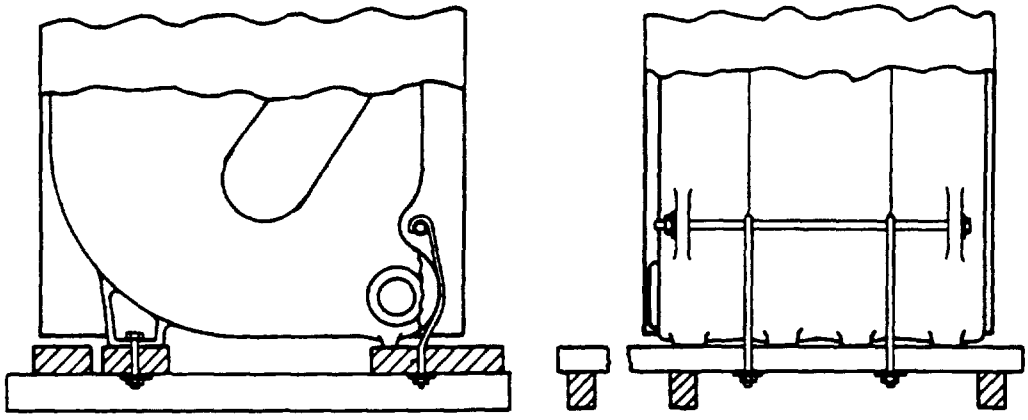

2. Tilt boiler to rear and to right.

3. Pivot boiler on right rear leg, rotate 90°, and lower to floor.

4. Tilt boiler so that crate base can be completely removed.

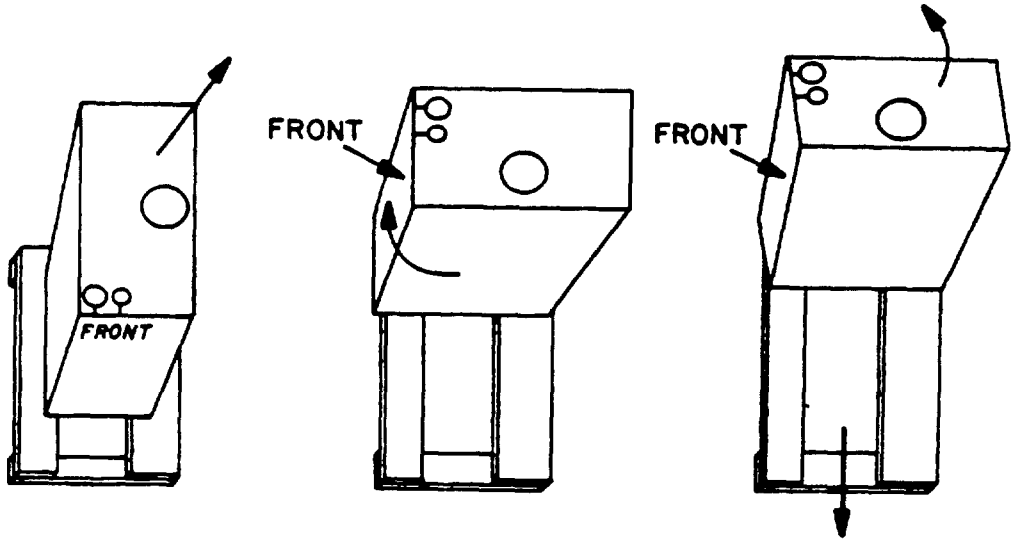

(The above procedure is quite simple and can be very easily accomplished by two men. In an emergency, it can be accomplished by one man with comparative ease).

5. After the boiler is removed from the crate base, it can be easily walked to its final location.

CHECK-OFF PARTS LIST FOR VP PACKAGED BOILER

Although the VP Packaged Boiler comes to you assembled, it is necessary to check certain accessory items prior to final hook up.

Accessory Box

Draft Stabilizer
Relief Valve
3/4" x 7-1/4" Pipe Nipple
3/4" Tee
3/4" Drain Valve
Oil Burner Nozzles
Circulator Flange
Gasket and Bolts
Thermostat
3/4" Street Elbow
Draft Tube Sleeve
Sleeve Insulation
Instruction Sheet

Oil Burner Box

DH-F Oil Burner

ELIMINAIRE FEATURE

This VP Boiler makes use of a special front section with a 1-1/2" supply tapping incorporating the "Eliminaire" feature (See Figs. 3 and 4).

The "Eliminaire" is a unique, built-in air separator which prevents air from being transmitted to the system and directs the air to the compression tank or vent. This eliminates the need for external air separators such as dip-tubes or unlined accessories. The "Eliminaire" also assures positive air separation, thereby insuring proper system performance.

CONTROL TAPPINGS		
LOCATION	SIZE OF TAPPINGS	CONTROL USED
A	3/4	RELIEF VALVE
B	3/4	LIMIT CONTROL OR COMBINATION LIMIT AND REVERSE ACTING CONTROL (FOR INSTALLATIONS WITHOUT TANKLESS WATER HEATER)
C	3/4	IMMERSION CONTROL DOUBLE THROW SWITCH OR IMMERSION CONTROL RELAY COMBINATION
D	1/4	COMBINATION ALTITUDE GAUGE AND THERMOMETER
E	3/4	AUXILIARY LIMIT CONTROL (WHEN REQUIRED)

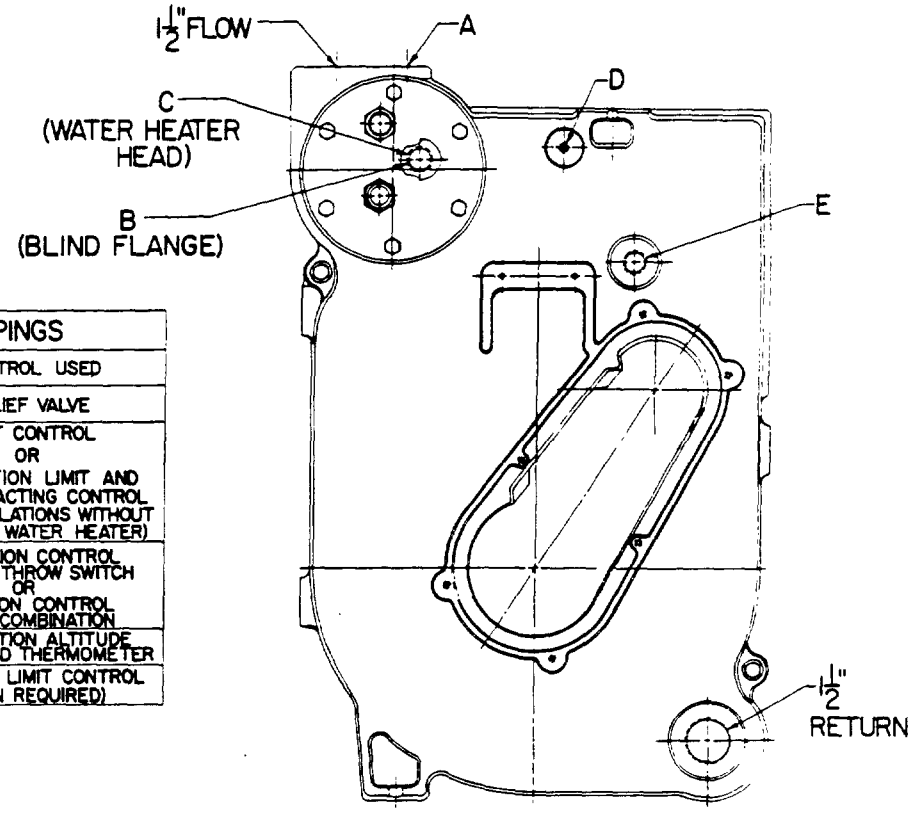

FRONT VIEW-SHOWING CONTROL TAPPINGS

FIGURE 3

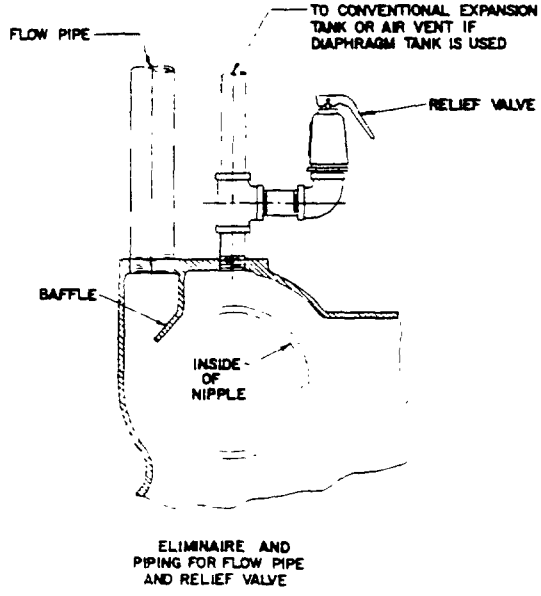

ELIMINAIRE AND PIPING FOR FLOW PIPE AND RELIEF VALVE

FIGURE 4

INSTALLING THE VP BOILER

After moving the VP Packaged Boiler to the desired location, final installation procedures should be accomplished as outlined below.

1. Hook up piping. If jacket extension is to be used, make sure that piping connected with the hot water heater and the boiler return piping to the circulator is arranged to pass through the opening in either the top or sides of the jacket extension (follow assembly instructions accompanying same). (See Fig. 5).

2. Screw drain valve into tee at lower right front of boiler.

3. Install relief valve and fittings in top of front section (See Fig. 4), making sure the direction of the discharge is away from controls.

4. The upper flange of the circulator should be installed on the return piping, then bolted to the circulator flange. Be sure that flange gasket is not damaged, and that the flange bolts are drawn up equally tight.

5. Install the flue pipe and draft stabilizer using instructions provided with stabilizer. The flue pipe should not extend beyond the inside wall of the chimney flue. Horizontal runs of flue pipe should be kept at a minimum with approximately 1/4" pitch per foot maintained.

6. Run electric service line from switch (not furnished by A-S) to the control mounted on built-in water heater, or for boilers without water heater, on water heater opening cover plate.

7. The Cad Cell lead should be taped to the conduit assembly extending from control to burner to prevent snagging or damage. (See Pg. 1).

8. Install room thermostat.

9. Make all electric connections according to wiring diagram. (See Fig. 6).

10. The boiler is now ready to be filled. THE FILLING PROCEDURE IS AN IMPROVED METHOD, AND SHOULD BE FOLLOWED AS INDICATED ON FIG. 7.

11. Boiler is now ready for service.

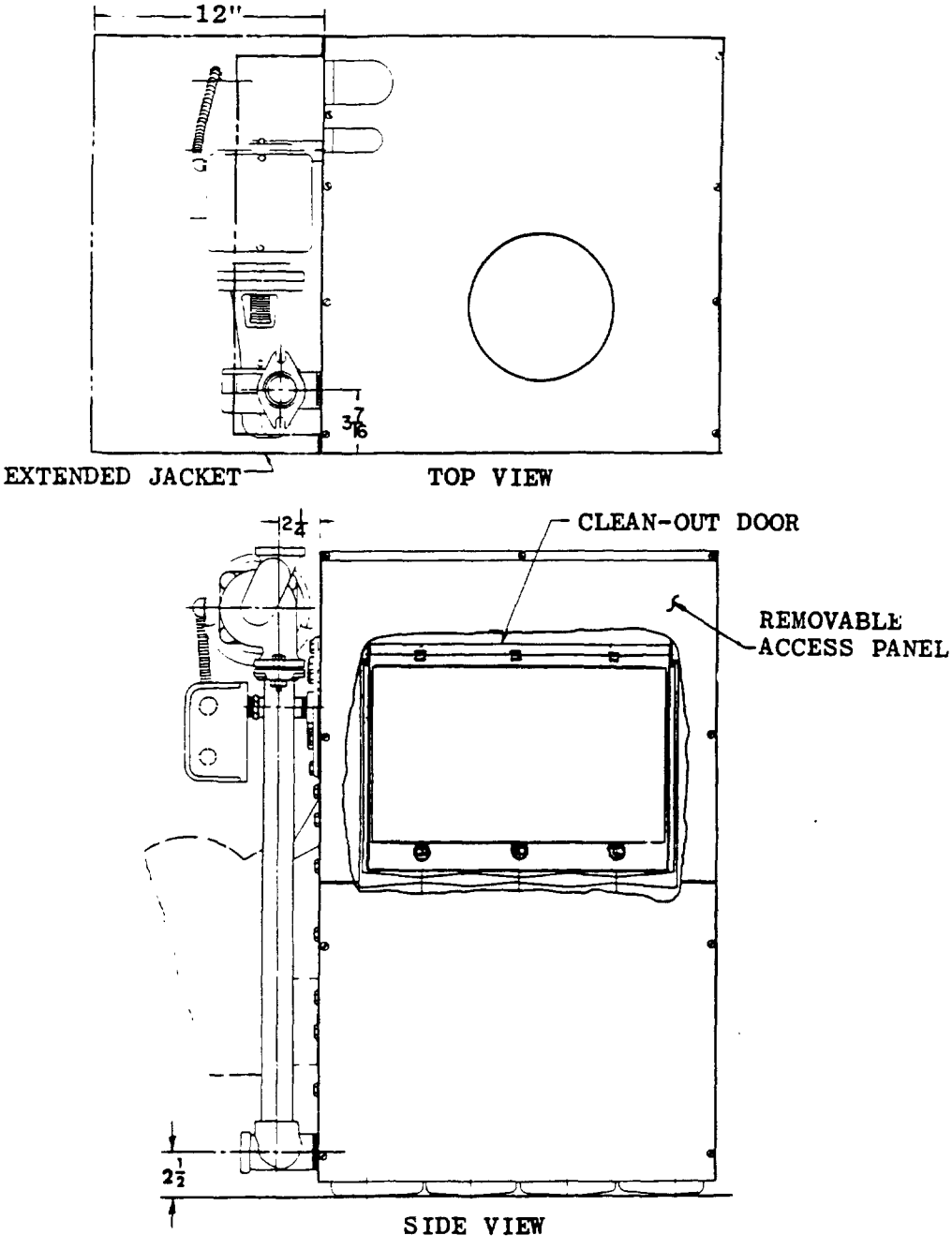

FIGURE 5

Space Requirements For Boiler Piping

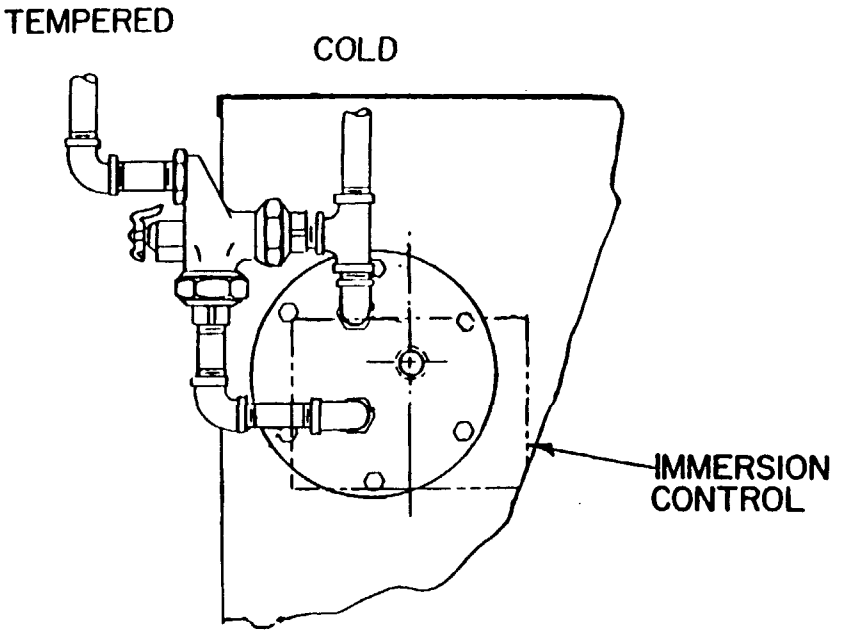

PARTIAL VIEW SHOWING PIPING
FROM WATER HEATER TO MIXING VALVE

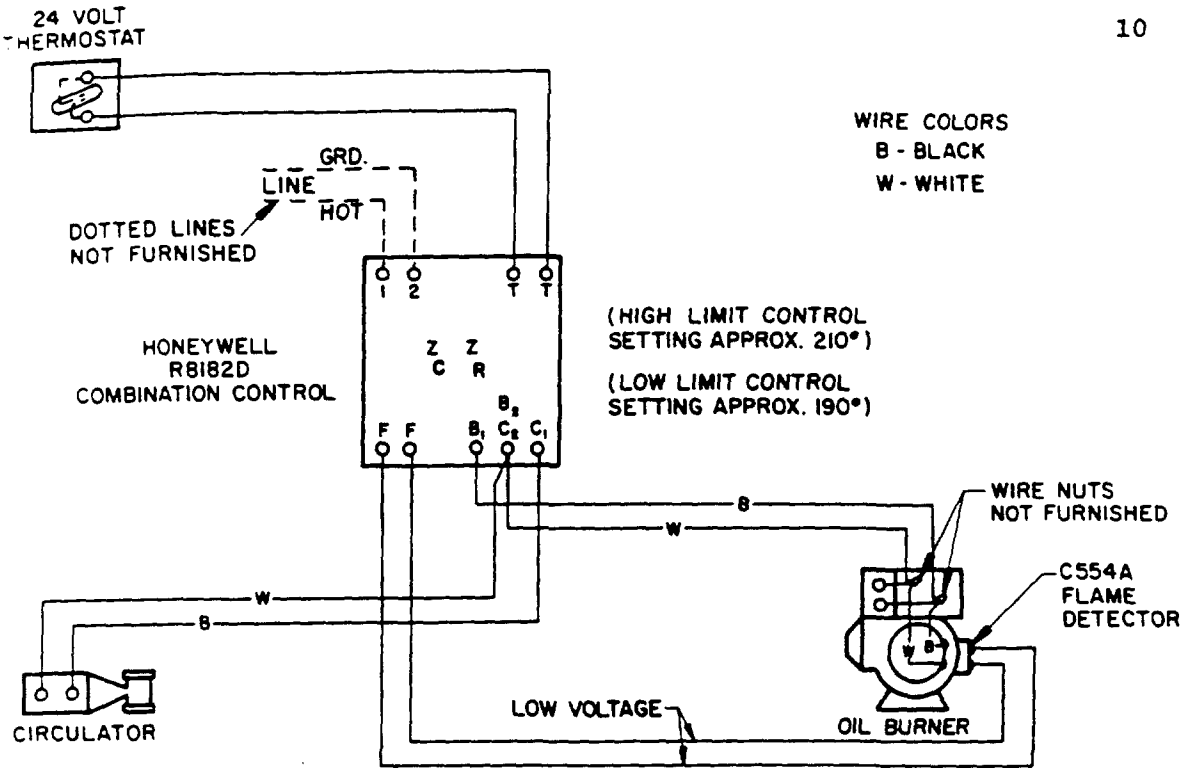

GENERAL SCHEMATIC SHOWING WIRING TO COMPONENTS

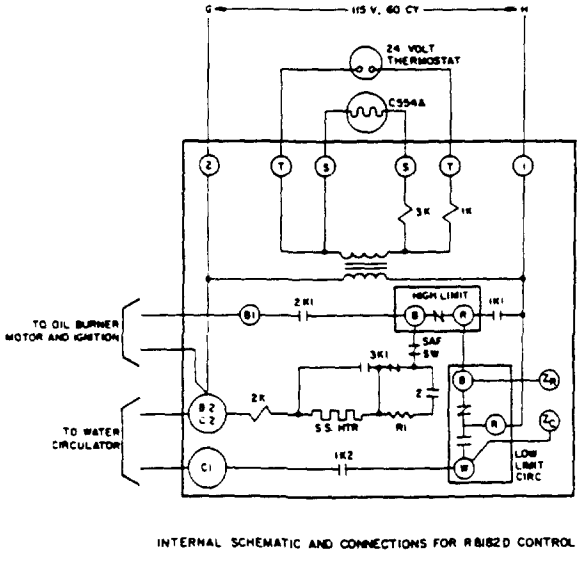

INTERNAL SCHEMATIC AND CONNECTIONS FOR R8182D CONTROL

PACKAGED OIL BOILER WITH WATER HEATER
WIRING DIAGRAMS FOR CONSTANT IGNITION

Figure 6 a

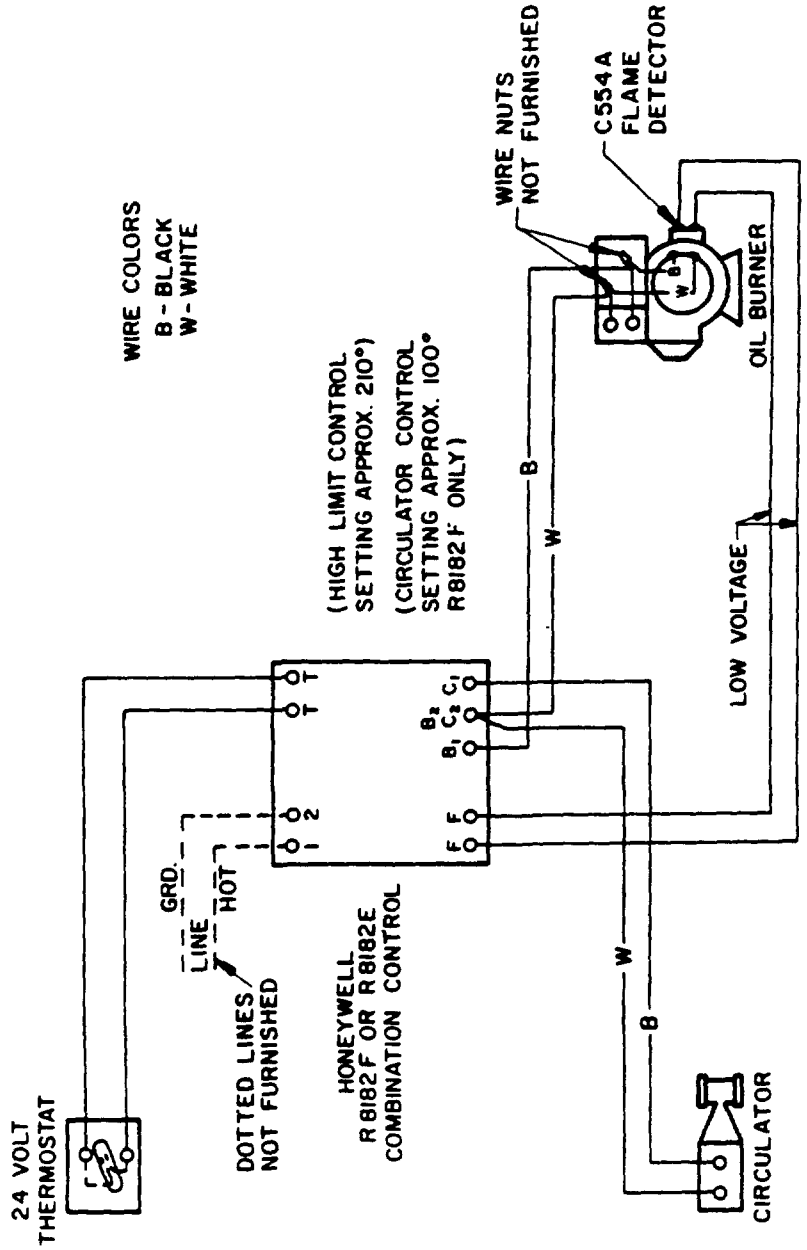

GENERAL SCHEMATIC SHOWING WIRING TO COMPONENTS

PACKAGED OIL BOILER LESS WATER HEATER WIRING DIAGRAMS
WITH REVERSE ACTING CIRCULATOR CONTROL AND CONSTANT IGNITION

FIGURE 6 b

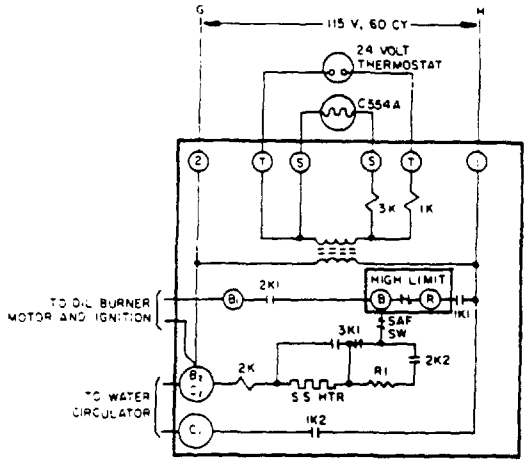

INTERNAL SCHEMATIC AND CONNECTIONS FOR R8182E CONTROL

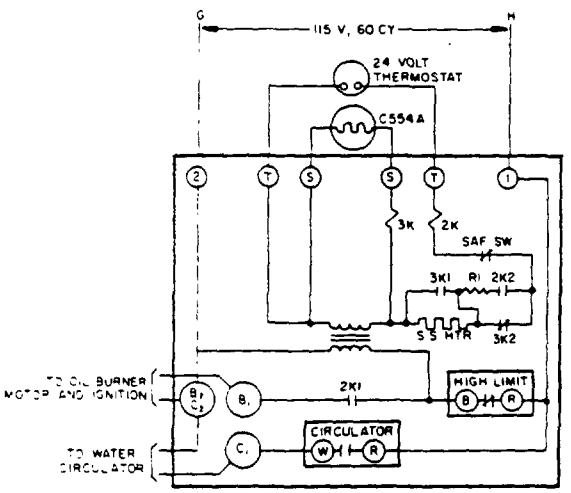

INTERNAL SCHEMATIC AND CONNECTIONS FOR R8182F CONTROL

PACKAGED OIL BOILER LESS WATER HEATER WIRING DIAGRAMS WITH REVERSE ACTING CIRCULATOR CONTROL AND CONSTANT IGNITION

Figure 6 c

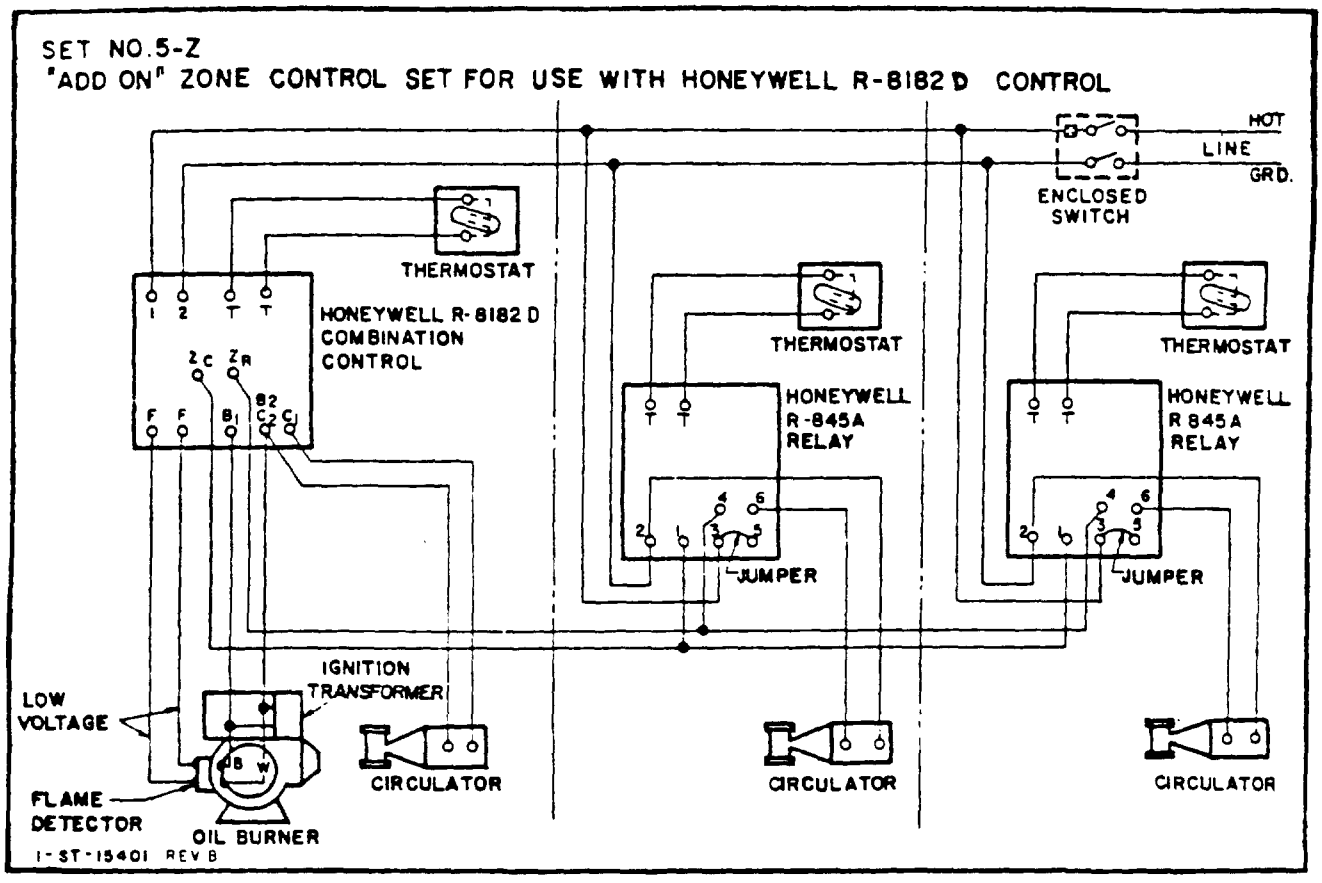
SET NO.5-Z
"ADD ON" ZONE CONTROL SET FOR USE WITH HONEYWELL R-8182 D CONTROL
HOT
LINE
GRD.
ENCLOSED SWITCH
THERMOSTAT
HONEYWELL R-8182 D COMBINATION CONTROL
THERMOSTAT
HONEYWELL R-845A RELAY
JUMPER
THERMOSTAT
HONEYWELL R 845A RELAY
JUMPER
IGNITION TRANSFORMER
LOW VOLTAGE
FLAME DETECTOR
OIL BURNER
CIRCULATOR
CIRCULATOR
CIRCULATOR
I-ST-15401 REV B

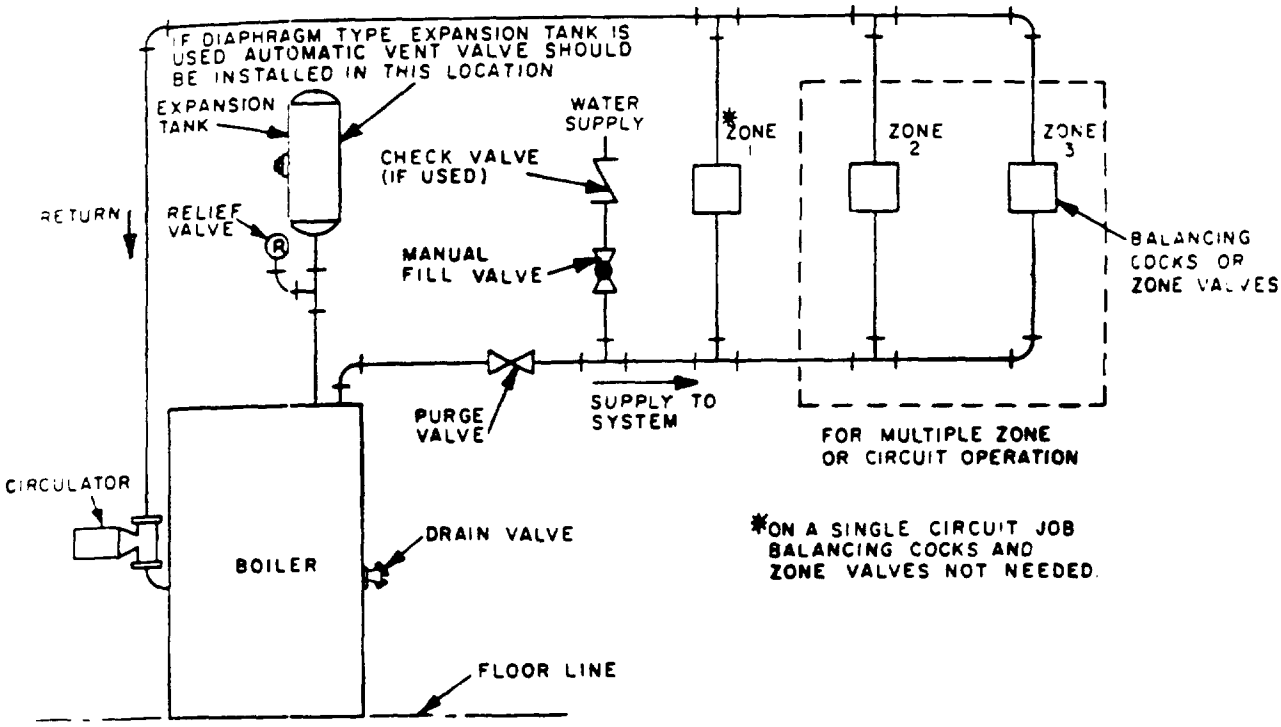

FIG. 7

FILLING

The following procedure should be used to fill a series loop Heatrim System (See Fig. 7).

1. Close all zone valves except the one for the zone to be filled with water and purged of air.
2. Open the drain valve on the boiler.
3. Open the fill valve.
4. Close the purge valve.
5. Open the relief valve.
6. Open the valve to the second zone to be purged; then close the first. Repeat this step until all zones have been purged of air and filled with water; but always have one zone open. (Zones are purged and filled when water can be felt in the pipe at the end of the zone).
7. Close the drain valve.
8. When water appears, release the lever on the relief valve, allowing it to close.
9. Continue filling the system until the pressure gauge reads 12 psi without heat or 25 psi at 200° F.; close the fill valve.
10. Open the purge valve.

Following the completion of the installation, a thorough check should be made of the entire hydronic system to locate possible leaks.

NOTE: For a single loop heatrim system no additional vents, cocks, valves or other accessories are required except: When tankless heater is used and heatrim is above the boiler outlet, install a flow-check valve to prevent gravity circulation.

CAUTION: If a valve of any type is installed in the piping leading to or from the expansion tank, BE SURE THAT IT IS ALWAYS OPEN WHILE THE BOILER

CARE OF BOILER WHILE IN OPERATION

ON A CLOSED HOT WATER SYSTEM, THE PRESSURE MUST NOT EXCEED 30LBS., IF IT DOES, IT MUST BE RELIEVED IMMEDIATELY AND THE CAUSE OF THE FAILUR OF THE THE RELIEF VALVE INVESTIGATED AND CORRECTED: OTHERWISE, PRESSURE MAY BUILD UP AND CAUSE DAMAGE TO THE HEATING SYSTEM.

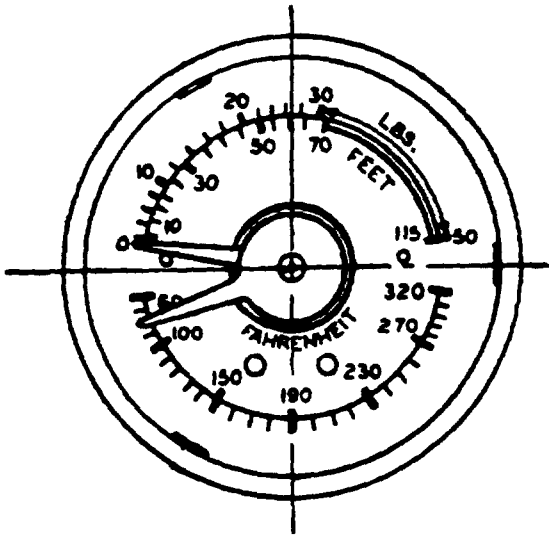

FIG. 8

The homeowner should periodically check the readings on the gauge, located on the front of the boiler (See Fig. 8). The lower scale indicates the water temperature. That temperature should never be allowed to exceed 250° F. The boiler is designed to operate with a normal maximum water temperature of 230° F; but during mild weather, the system operates with water temperatures considerably below the maximum.

The upper scale indicates the pressure within the system and should not exceed 30 lbs. In a closed system, the boiler and piping are entirely filled with water except for a cushion of air in the upper portion of the expansion tank. When the water is heated, it expands, compressing the air in the expansion tank. If, for any reason, this air were completely displaced from the tank, there would no longer be a cushion; an increase in water temperature would cause a corresponding increase in valume; pressure would force the relief valve open to discharge the excess volume. To correct such a condition, the expansion tank must be drained enough to permit the tank to fill with air.

Clean boiler surfaces at regular intervals.

Do not draw water from boiler while in use. When adding water while boiler is in operation, DO NOT OPEN SUPPLY VALVE FULLY, BUT ADD WATER SLOWLY.

CARE OF BOILER WHILE NOT IN OPERATION

At the end of the heating season, clean boiler surface thoroughly. Access to flueways may be gained by removing the upper half of right-hand side panel and then removing the cleanout door.

The access panel may be removed after unscrewing, by lifting and swinging out the bottom of the panel first, using the two finger holes provided in the panel.

Spray flue surfaces with light lubricating or crankcase oil using gun with extended stem so as to reach all corners. When replacing cleanout door, boiler putty is necessary for sealing.
Lubricate circulator in accordance with lubrication instructions on decal.

Clean and remove flue pipe where feasible.

Keep system filled with water; in other words, DO NOT DRAIN BOILER.

IF BOILER IS NOT USED DURING WINTER, IT MUST BE FULLY DRAINED TO PREVENT DAMAGE CAUSED BY FREEZING.

CONSTRUCTION DETAILS

Three different cored section castings are used to make up the VP Packaged Boiler (See Fig. 9).

1. Front section with 1-1/2" supply tapping, and Eliminaire" (5-3/8" thick).
2. Back section (4-3/4" thick).
3. Center section (6" thick).

The wide center section is used in order to give the boiler sufficient length for the combustion chamber and to provide the necessary water content for satisfactory operation of the tankless H. W. S. coil.

All control tappings and domestic water heater openings are provided on the front section (See Fig. 10).

PLATE WORK

Burner Plate and Door

These are integral components and made of steel. A refractory radiation shield is used to protect the burner plate from heat.

CANOPY

An aluminized sheet-steel canopy is provided. Smokepipe sizes are as follows:

No. of Sections	Smokepipe Size
3	7"
4	7"
5	8"

INSULATION

The entire jacket is insulated with 1/2" Fiberglas. An additional 1" of insulation is used on the canopy.

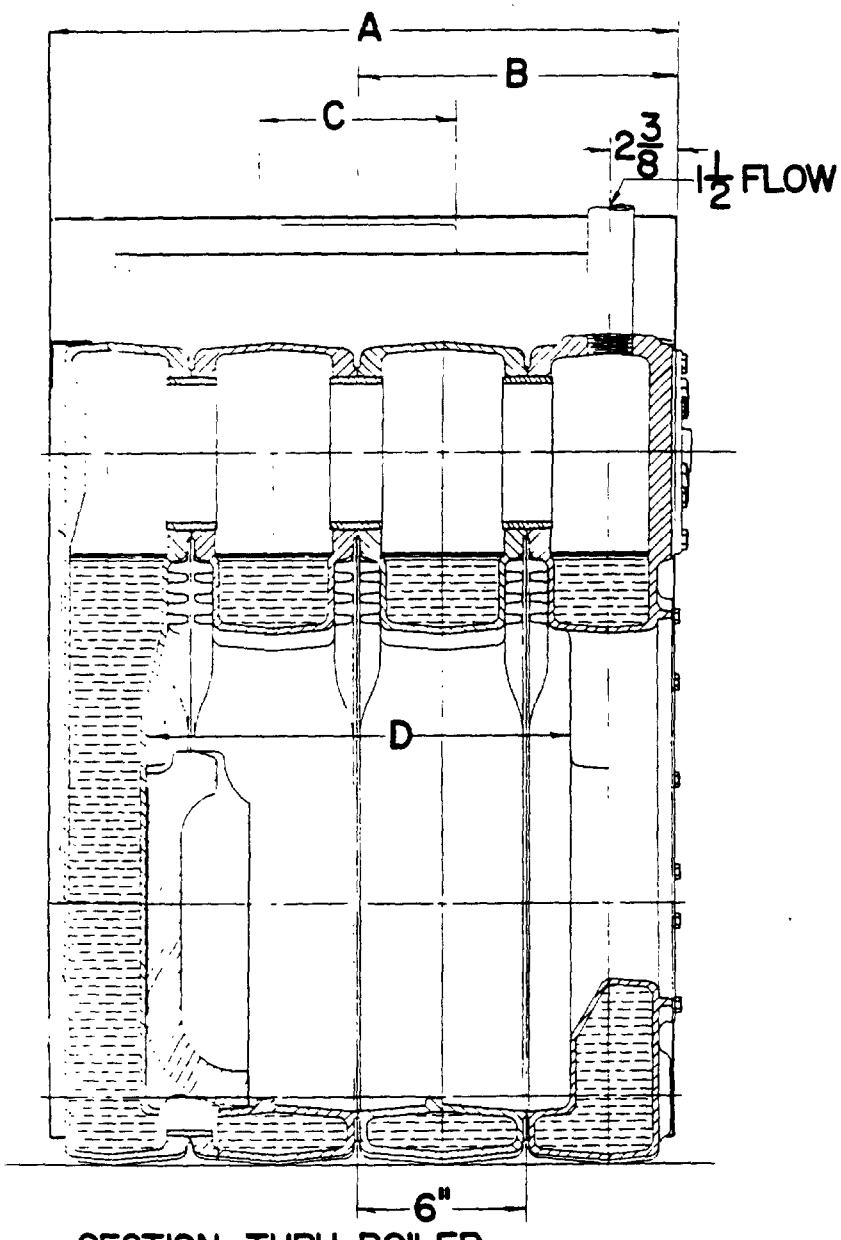

SECTION THRU BOILER

NUMBER OF SECTIONS	DIMENSIONS A	B	C	D
3	16 5/8	8 7/16	6 15/16	9 1/8
4	22 5/8	11 7/16	6 15/16	15 1/8
5	28 5/8	14 7/16	7 15/16	21 1/8

FIGURE 9

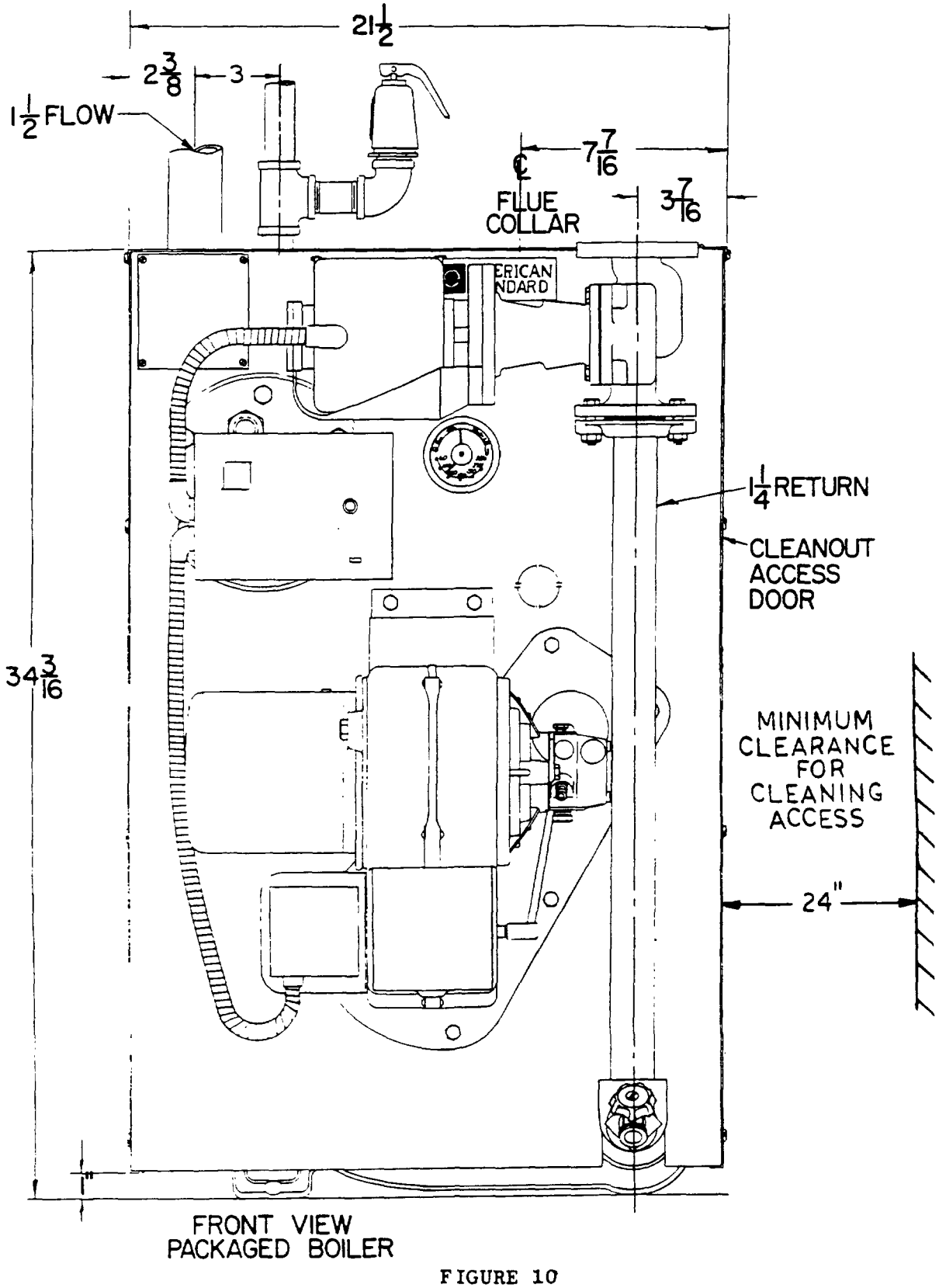

FIGURE 10

Although the basic boiler remains the same, the differences exist in the wiring procedure with or without water heater (See Fig. 6).

COMBUSTION CHAMBER

The VP Boiler has a one-piece precast Refractory Combustion target wall specially designed for maximum performance and efficiency.

OIL BURNER

The Model DH-F oil burner is used with the VP boiler. This burner is especially designed with a conventional flame-retention head to give maximum performance and efficiency in the VP boiler.

CONTROLS

Controls for the VP Packaged Boiler are conventional.

JACKET

Jacket design for the VP Packaged Boiler is conventional as with other A-S boilers.

CONSUMER PROTECTION - WARRANTY

American-Standard products normally reach owners or consumer-users through an industry channel of distributors and plumbing and heating contractors. Experience has shown that claims of defects in our products generally relate to abuse or to other damage which occur after our sale and are not our responsibility. Since determining proper responsibility requires local inspection, our warranty (set forth below) extends only to our direct buyers; distributors are best equipped to obtain the facts underlying claims, to place responsibility where it belongs and to recommend/handle repair or replacement.

American-Standard warrants only to its distributors and other direct Buyers that it will furnish by freight a replacement for, or at its option repair, any product of its manufacture or part or portion thereof, proved to its satisfaction to be defective in material or workmanship under normal use and service within one year after installation.

THERE IS NO OTHER WARRANTY, EXPRESS OR IMPLIED, INCLUDING NO IMPLIED WARRANTY OF MERCHANTABILITY OR IMPLIED WARRANTY FOR FITNESS FOR A PARTICULAR PURPOSE AND AMERICAN-STANDARD WILL NOT BE RESPONSIBLE FOR ANY DAMAGES WHATSOEVER, NOR FOR LABOR OR TRANSPORTATION EXPENSES RELATING TO SUCH REPLACEMENT OR SUCH REPAIR, NOR WILL IT BE HELD RESPONSIBLE FOR WARRANTY ADJUSTMENTS COSTING MORE THAN THE PRICE OF THE PRODUCT TO ITS DISTRIBUTORS AND OTHER DIRECT BUYERS.

Goods of other manufacturers sold by American-Standard are not warranted unless accompanied by an express written warranty, but the Seller will endeavor to secure for its direct Buyers the benefits of warranties extended by such other manufacturers for such goods.

American-Standard is proud of its record for product quality and for fairness in handling warranty matters; and, if an ultimate user of our products should feel our warranty system described above does not work fairly in his case, he should write the Office of the President, Director of Consumer Affairs, U. S. Plumbing/Heating, American-Standard, 40 West 40th Street, New York, N. Y. 10018.

DEALER'S NAME: _____

ADDRESS: _____

TELEPHONE NO.: _____

DATE OF INSTALLATION: _____

AMERICAN STANDARD

PLUMBING & HEATING

P. O. BOX 2003

NEW BRUNSWICK, N.J. 08903

AMERICAN STANDARD

VP OIL BOILER

INSTRUCTION MANUAL

PACKAGED OIL HEATING UNITS

NOTICE TO INSTALLER AND OPERATOR
THIS BOOKLET MUST BE AFFIXED ON OR ADJACENT TO THE HEATING EQUIPMENT.

FORM NO. 32425-[redacted]-04

01379

To the homeowner:

The American-Standard boiler which has been installed for you is the heart of your hydronic heating system. Since the performance of your system depends upon the boiler, it has been designed to operate at maximum efficiency. Advanced design, precision engineering, and modern manufacturing techniques are combined in this product to provide you with comfort at a low operating cost and with a minimum of maintenance.

The boiler sections are cast in iron--a metal resistant to corrosion, especially in a closed system. If this boiler is part of a new installation, it is joined in a closed system--i.e., normally water is neither lost nor added--and should not be drained. The replacement of water adds oxygen to the system; corrosive action continues until that oxygen is consumed; but, certainly, the boiler should not be fired without an adequate supply of water. On the other hand, if the boiler is not used during the winter months, it must be drained to prevent damage caused by freezing.

By following the suggestions contained in this manual, you can assume your boiler will function properly for many years. Should any problem arise, contact your nearest American-Standard contractor, whose name can be found in the "yellow pages" of your telephone directory.

AMERICAN-STANDARD

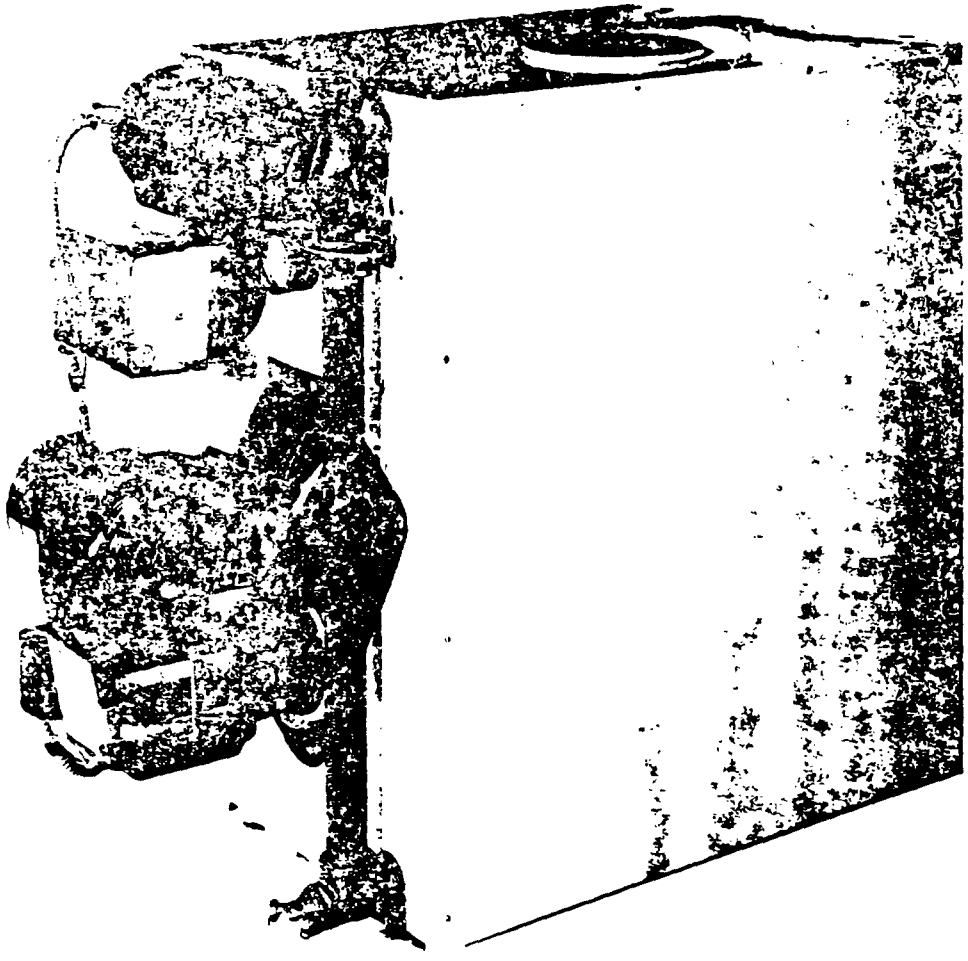

The VP Packaged Boiler comes to you pre-assembled; the installers major responsibility will be in locating, connecting accessory parts and performing the actual hookup.

GENERAL INFORMATION

The VP Packaged Boiler has been tested and approved by I=B=R as an oil-fired [illegible].

The VP Packaged boiler comes with three, four or five sections. I=B=R ratings [illegible] Table I.

PLACING BOILER FOR INSTALLATION

The boiler should be located on a level floor as near the chimney as possible. Be sure that sufficient space is allowed at the front (at least a 20" clearance) to allow for removal of the water heater. Clearing space (approximately 24") should also be allowed at the right side of the boiler.

If water condition exists in the basement, or it has been necessary to waterproof the basement floor, the boiler should be mounted on a concrete or hollow tile base [illegible].

UNPACKING VP PACKAGED BOILER

Locate the boiler near its final installation site before removing its crate. Unpacking should be accomplished as follows: (See Figs. 1 and 2)

1. Unfasten all crating wire at the corner of the crate.
2. Remove nails fastening crate sides to top and bottom of crate.
3. Lift off crate top and unwrap crate side from crate base.
4. After removal of the plastic bag, remove and discard the short nipple from the flow tapping at top of boiler.
5. Remove box containing draft stabilizer, relief valve, and miscellaneous parts.

EXPANSION TANK LOCATION

Care should be taken in locating the expansion tank. It should not be set in a cold or exposed space. If the pipe to or from the tank were to freeze, serious damage could result. It is also preferable to use a minimum of horizontal run piping to the expansion tank to facilitate free communication from the boiler to the tank.

TABLE 1

RATINGS & DATA

NO. OF SECTIONS	MODEL NUMBER	BURNER USED	I=B=R BURNER CAPACITY (gph)	NOZZLE USED	I=B=R GROSS OUTPUT (Mbh)	NET INSTLD. RAD.-WATER (Mbh)	TANKLESS HEATER NUMBER	* TANKLESS HEATER RATING (GPM)	I=B=R NOMINAL CHIMNEY SIZE
3	VP-115	DH-4F1	1.05	1.00/80 ES	115.0	100.0	130	3-1/2	8" x 8" x 15'
	VP-130	DH-4F1	1.15	1.10/80 ES	130.0	113.0	130	3-1/2	8" x 8" x 15'
	VP-140	DH-4F1	1.25	1.25/80 ES	140.0	121.7	130	3-1/2	8" x 8" x 15'
4	VP-170	DH-5F2	1.50	1.50/80 ES	170.0	147.8	131	4-3/4	8" x 8" x 15'
	VP-190	DH-5F2	1.70	1.65/80 B	190.0	165.2	131	4-3/4	8" x 8" x 15'
5	VP-230	DH-5F3	2.05	2.00/70 R	230.0	200.0	132	6	8" x 8" x 15'
	VP-250	DH-5F3	2.25	2.25/70 R	250.0	217.4	132	6	8" x 12" x 15'

NOTE: Boilers with Tankless Heaters will carry the suffix "T" (i.e. - "VPT")

* Heater Ratings are commercial ratings - gallons per minute of water heated from 40F to 140F with 200F boiler water.

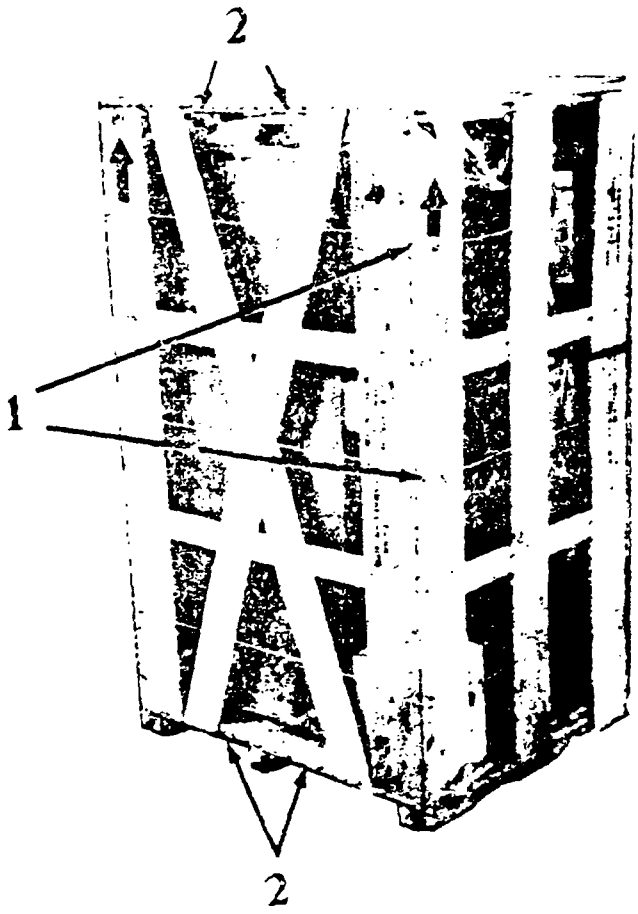

1. Side Fasteners
2. Nails

FIG. 1

Remove four nuts securing boiler to the crate base from each side. Remove bolts on left side. Bolts on right side can then be pushed up inside jacket where they will stay. This is important to prevent damaging jacket when removing boiler from base.

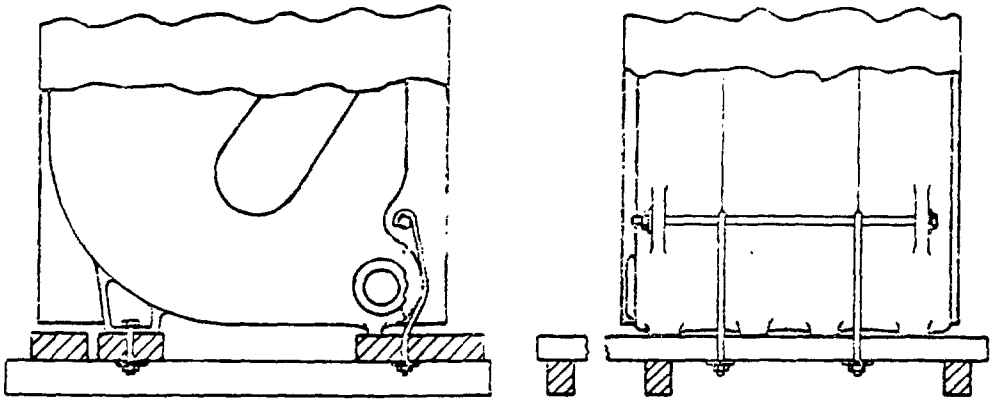

2. Tilt boiler to rear and to right.

3. Pivot boiler on right rear leg, rotate 90°, and lower to floor.

4. Tilt boiler so that crate base can be completely removed.

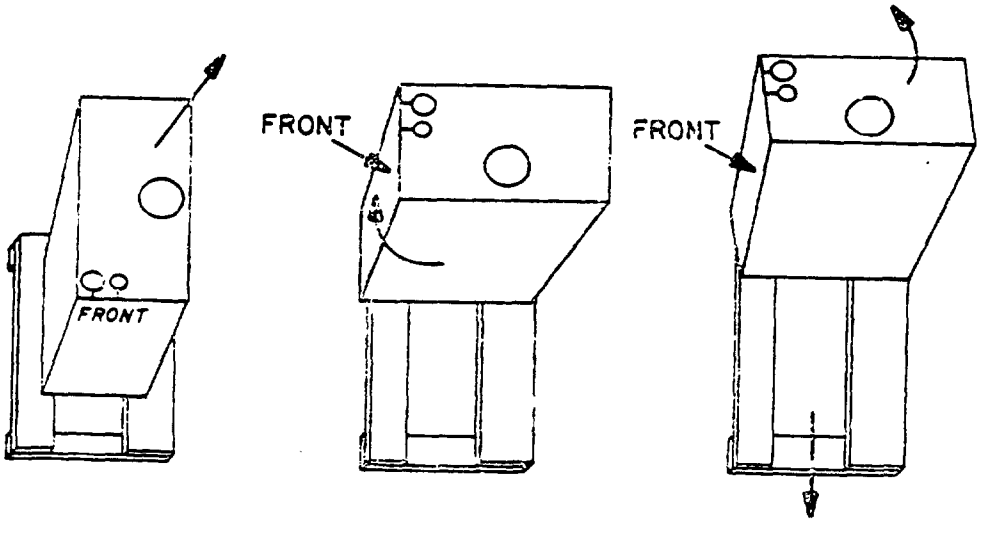

(The above procedure is quite simple and can be very easily accomplished by two men. In an emergency, it can be accomplished by one man with comparative ease).

5. After the boiler is removed from the crate base, it can be easily walked to its final location.

CHECK-OFF PARTS LIST FOR VP PACKAGED BOILER

Although the VP Packaged Boiler comes to you assembled, it is necessary to check certain accessory items prior to final hook up.

Accessory Box

Draft Stabilizer
Relief Valve
3/4" x 7-1/4" Pipe Nipple
3/4" Tee
3/4" Drain Valve
Oil Burner Nozzles
Circulator Flange
Gasket and Bolts
Thermostat
3/4" Street Elbow
Draft Tube Sleeve
Sleeve Insulation
Instruction Sheet

Oil Burner Box

DH-F Oil Burner

ELIMINAIRE FEATURE

This VP Boiler makes use of a special front section with a 1-1/2" supply tapping incorporating the "Eliminaire" feature (See Figs. 3 and 4).

The "Eliminaire" is a unique, built-in air separator which prevents air from being transmitted to the system and directs the air to the compression tank or vent. This eliminates the need for external air separators such as dip-tubes or unlined accessories. The "Eliminaire" also assures positive air separation, thereby insuring proper system performance.

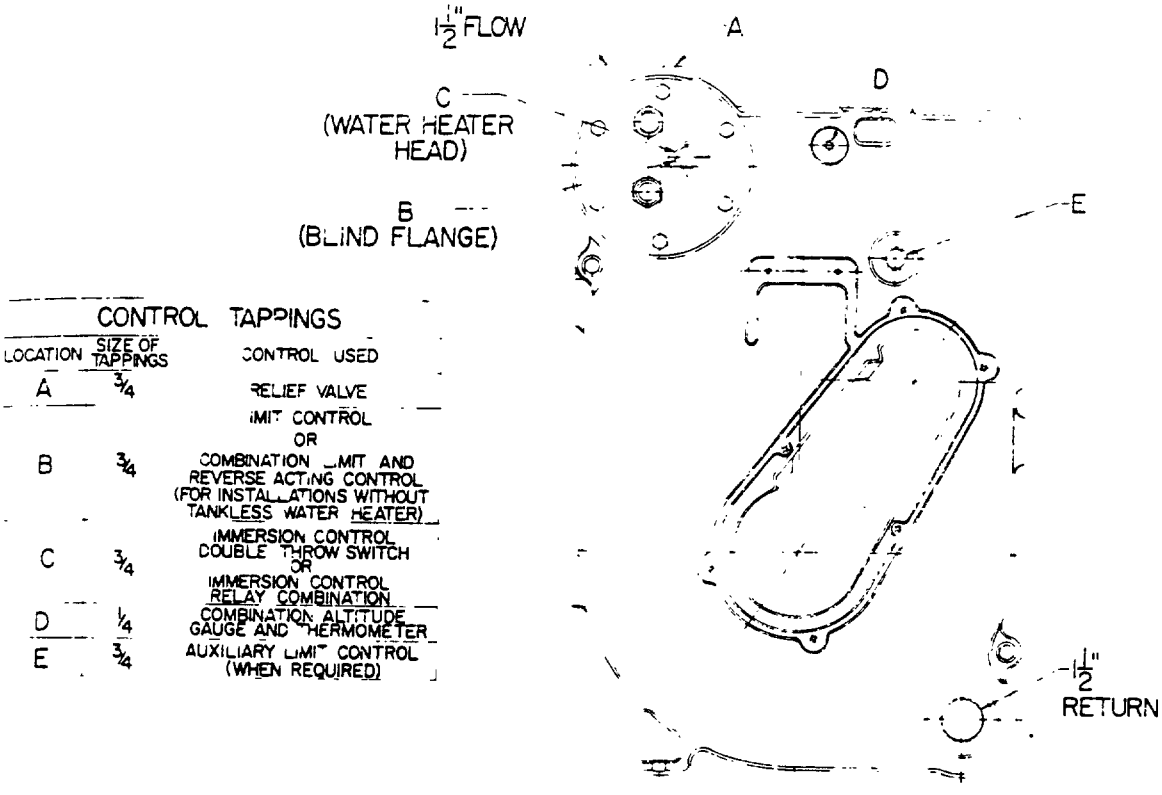

CONTROL TAPPINGS		
LOCATION	SIZE OF TAPPINGS	CONTROL USED
A	¾	RELIEF VALVE
B	¾	LIMIT CONTROL OR COMBINATION LIMIT AND REVERSE ACTING CONTROL (FOR INSTALLATIONS WITHOUT TANKLESS WATER HEATER)
C	¾	IMMERSION CONTROL DOUBLE THROW SWITCH OR IMMERSION CONTROL RELAY COMBINATION
D	¼	COMBINATION ALTITUDE GAUGE AND THERMOMETER
E	¾	AUXILIARY LIMIT CONTROL (WHEN REQUIRED)

FRONT VIEW-SHOWING CONTROL TAPPINGS

FIGURE 3

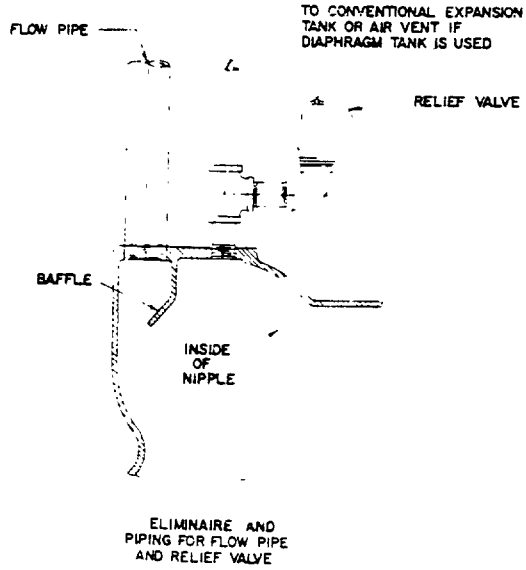

ELIMINAIRE AND PIPING FOR FLOW PIPE AND RELIEF VALVE

FIGURE 4

INSTALLING THE VP BOILER

After moving the VP Packaged Boiler to the desired location, final installation procedures should be accomplished as outlined below.

1. Hook up piping. If jacket extension is to be used, make sure that piping connected with the hot water heater and the boiler return piping to the circulator is arranged to pass through the opening in either the top or sides of the jacket extension (follow assembly instructions accompanying same). (See Fig. 5).

2. Screw drain valve into tee at lower right front of boiler.

3. Install relief valve and fittings in top of front section (See Fig. 4), making sure the direction of the discharge is away from controls.

4. The upper flange of the circulator should be installed on the return piping, then bolted to the circulator flange. Be sure that flange gasket is not damaged, and that the flange bolts are drawn up equally tight.

5. Install the flue pipe and draft stabilizer using instructions provided with stabilizer. The flue pipe should not extend beyond the inside wall of the chimney flue. Horizontal runs of flue pipe should be kept at a minimum with approximately 1/4" pitch per foot maintained.

6. Run electric service line from switch (not furnished by A-S) to the control mounted on built-in water heater, or for boilers without water heater, on water heater opening cover plate.

7. The Cad Cell lead should be taped to the conduit assembly extending from control to burner to prevent snagging or damage. (See Pg. 1).

8. Install room thermostat.

9. Make all electric connections according to wiring diagram. (See Fig. 6).

10. The boiler is now ready to be filled. THE FILLING PROCEDURE IS AN IMPROVED METHOD, AND SHOULD BE FOLLOWED AS INDICATED ON FIG. 7.

11. Boiler is now ready for service.

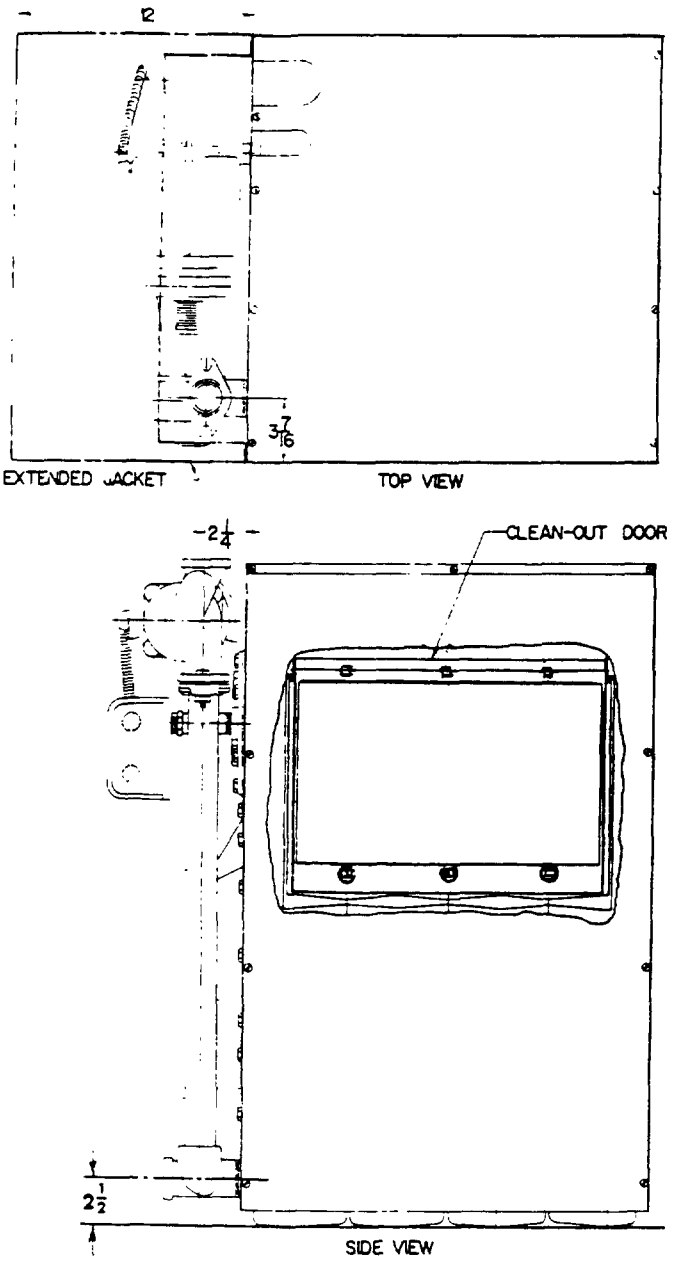

FIGURE 5

Space Requirements For Boiler Piping

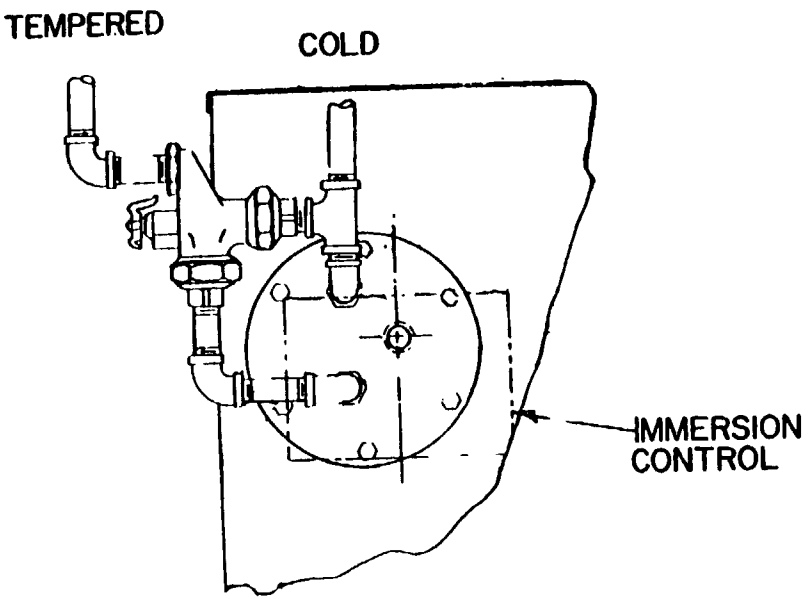

PARTIAL VIEW SHOWING PIPING
FROM WATER HEATER TO MIXING VALVE

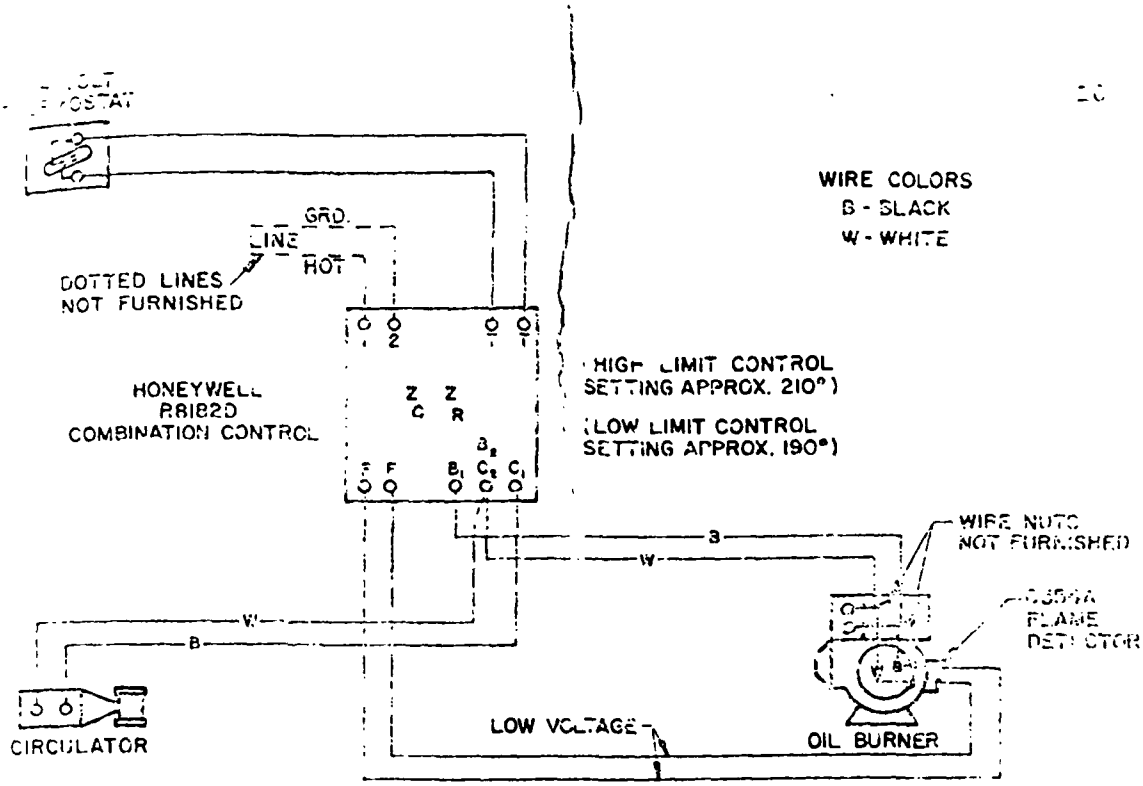

GENERAL SCHEMATIC SHOWING WIRING TO COMPONENTS

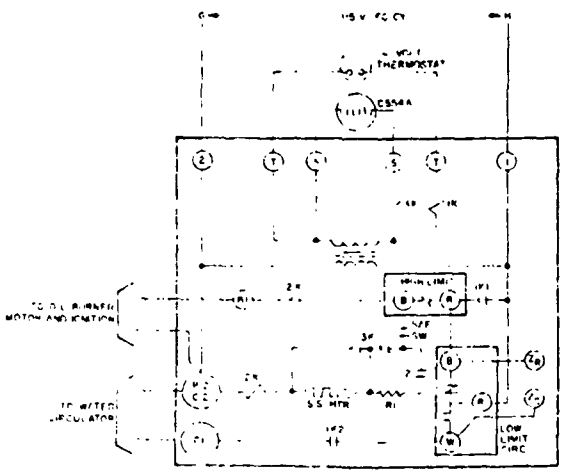

INTERNAL SCHEMATIC AND CONNECTIONS FOR R8182D CONTROL

PACKAGED OIL BOILER WITH WATER HEATER
WIRING DIAGRAMS FOR CONSTANT IGNITION

01391

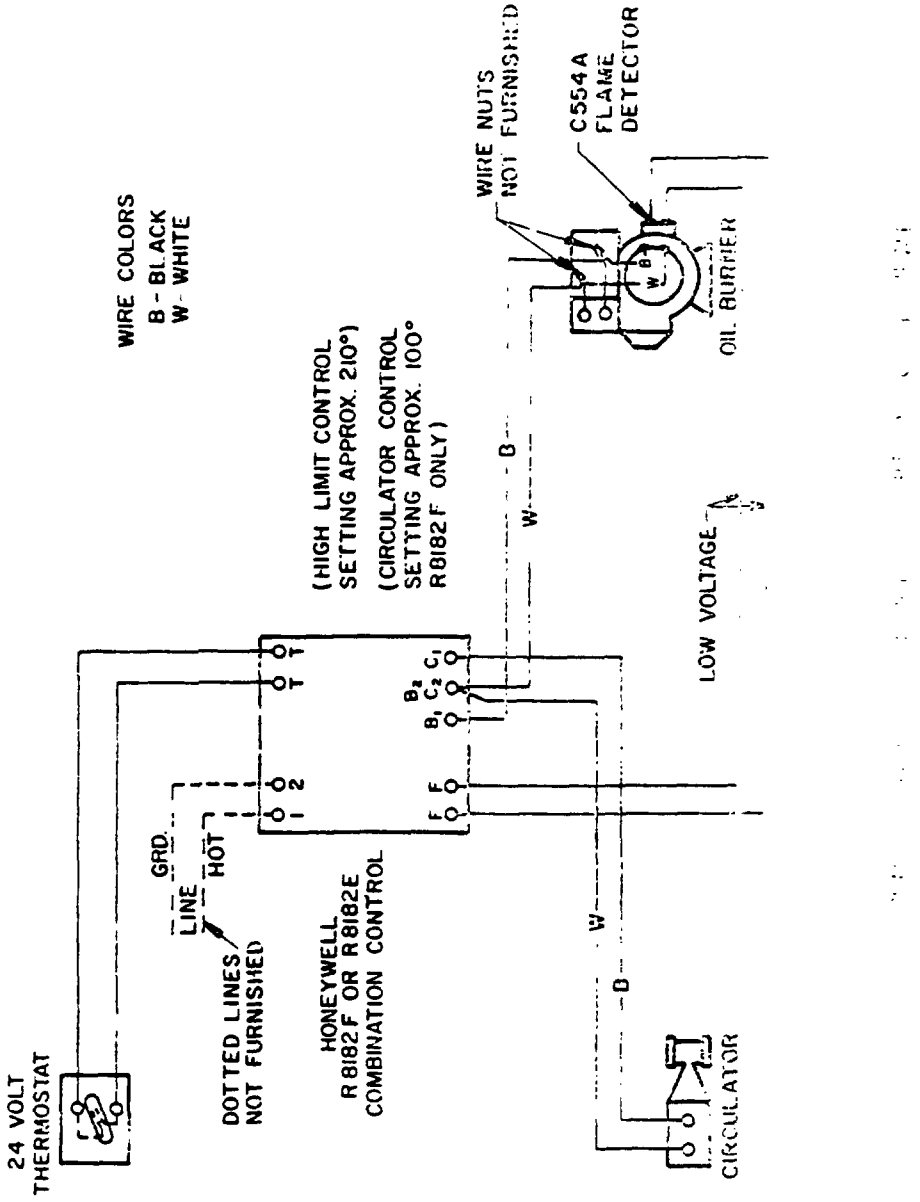

PACKAGED OIL BOILER LESS WATER HEATER WIRING DIAGRAM
WITH REVERSE ACTING CIRCULATOR CONTROL AND CONSTANT IGNITION

FIGURE 8-8

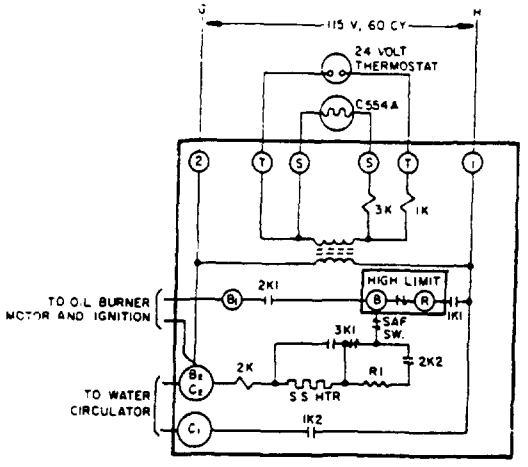

INTERNAL SCHEMATIC AND CONNECTIONS FOR R8182E CONTROL

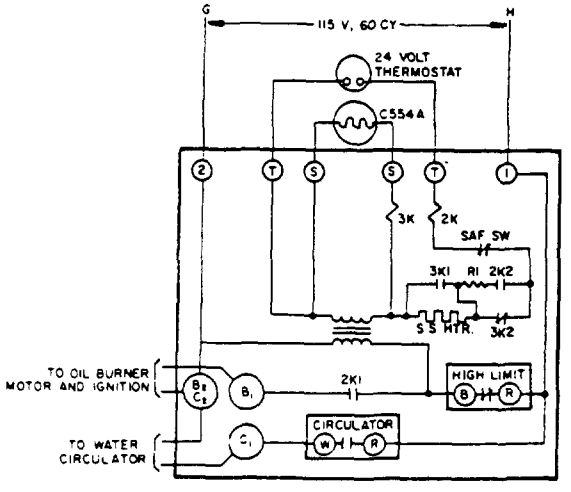

INTERNAL SCHEMATIC AND CONNECTIONS FOR R8182F CONTROL

PACKAGED OIL BOILER LESS WATER HEATER WIRING DIAGRAMS WITH REVERSE ACTING CIRCULATOR CONTROL AND CONSTANT IGNITION

Figure 6 c

SET NO.5-Z
"ADD ON" ZONE CONTROL SET FOR USE WITH HONEYWELL R-8182 D CONTROL

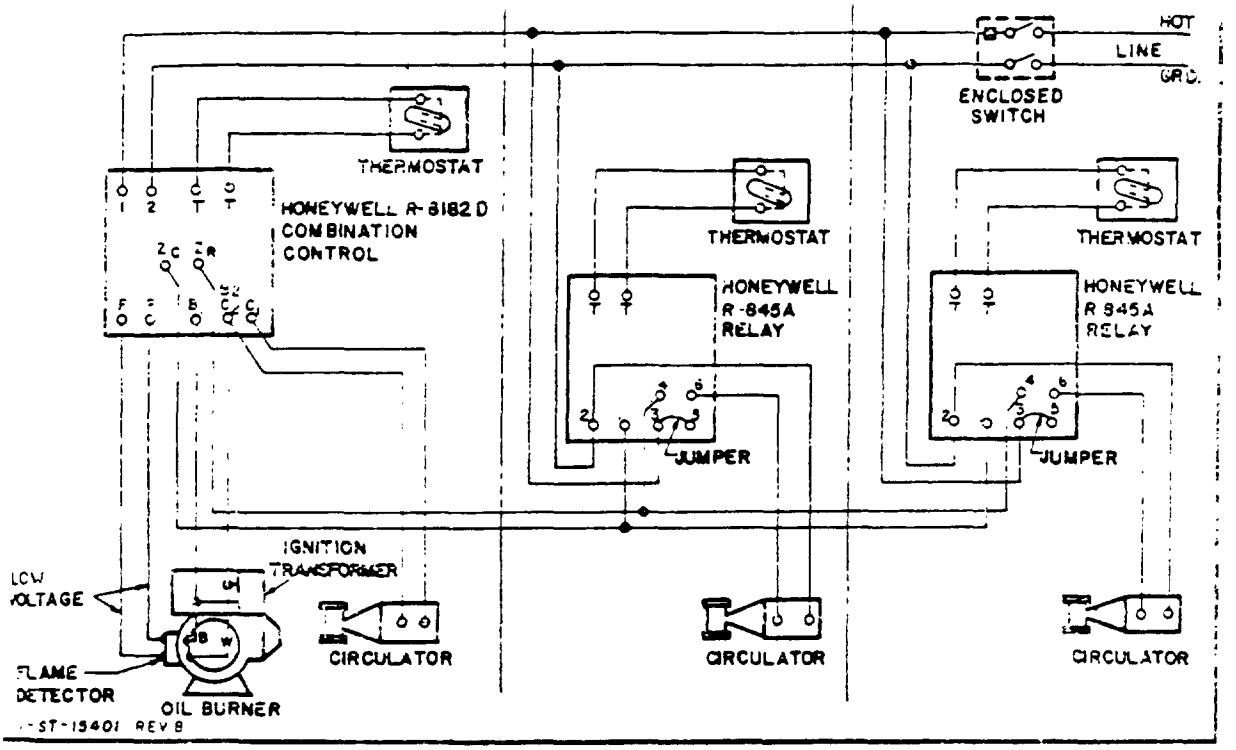

01394

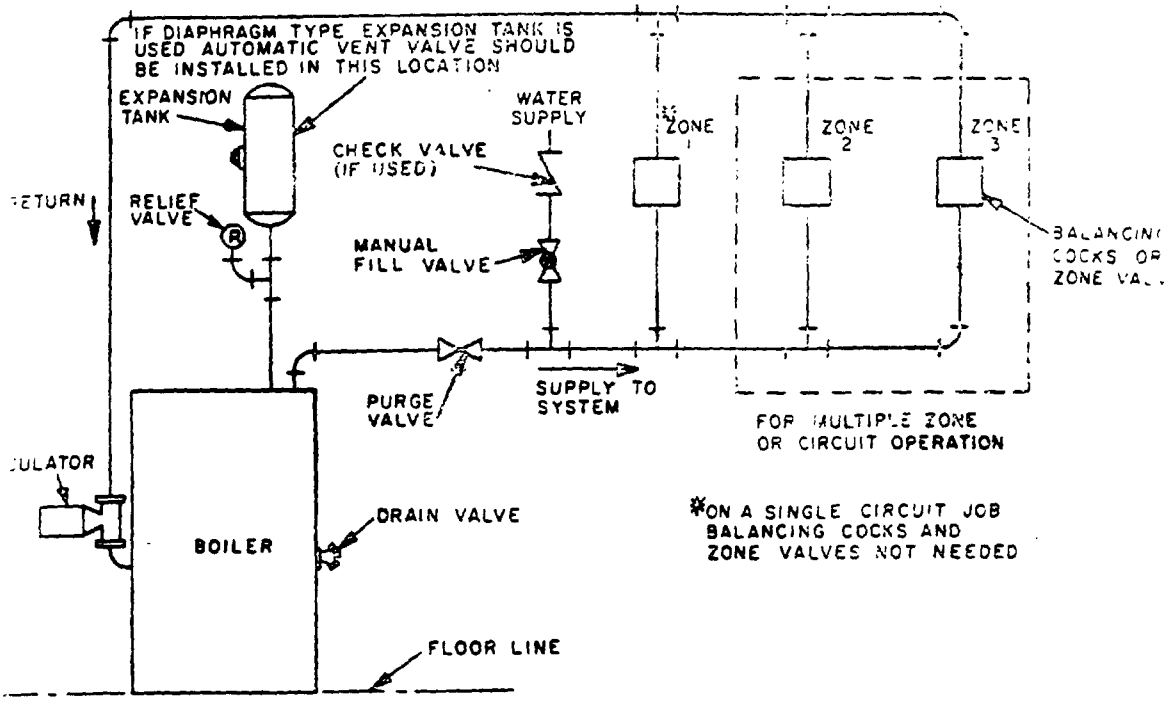

FIG. 7

FILLING

The following procedure should be used to fill a series loop Heatrim System (See Fig.

1. Close all zone valves except the one for the zone to be filled with water and purged of air.
2. Open the drain valve on the boiler.
3. Open the fill valve.
4. Close the purge valve.
5. Open the relief valve.
6. Open the valve to the second zone to be purged; then close the first. Repeat this step until all zones have been purged of air and filled with water; but always have one zone open. (Zones are purged and filled when water can be felt in the pipe at the end of the zone).
7. Close the drain valve.
8. When water appears, release the lever on the relief valve, allowing it to close.
9. Continue filling the system until the pressure gauge reads 12 psi without heat or 25 psi at 200° F.; close the fill valve.
10. Open the purge valve.

Following the completion of the installation, a thorough check should be made of the entire hydronic system to locate possible leaks.

NOTE: For a single loop heatrim system no additional vents, cocks, valves or other accessories are required except: When tankless heater is used and heatrim is above the boiler outlet, install a flow-check valve to prevent gravity circulation.

CAUTION: If a valve of any type is installed in the piping leading to or from the expansion tank, BE SURE THAT IT IS ALWAYS OPEN WHILE THE BOILER IS IN OPERATION.

CARE OF BOILER WHILE IN OPERATION

ON A CLOSED HOT WATER SYSTEM, THE PRESSURE MUST NOT EXCEED 30LBS., IF IT DOES, IT MUST BE RELIEVED IMMEDIATELY AND THE CAUSE OF THE FAILURE OF THE THE RELIEF VALVE INVESTIGATED AND CORRECTED: OTHERWISE, PRESSURE MAY BUILD UP AND CAUSE DAMAGE TO THE HEATING SYSTEM.

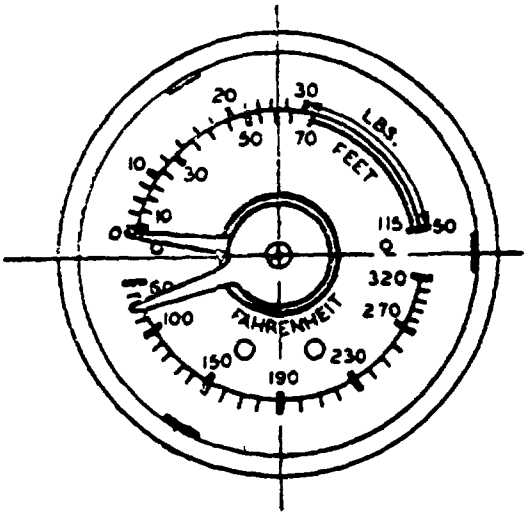

FIG. 8

The homeowner should periodically check the readings on the gauge, located on the front of the boiler (See Fig. 8). The lower scale indicates the water temperature. That temperature should never be allowed to exceed 250° F. The boiler is designed to operate with a normal maximum water temperature of 230° F; but during mild weather, the system operates with water temperatures considerably below the maximum.

The upper scale indicates the pressure within the system and should not exceed 30 lbs. In a closed system, the boiler and piping are entirely filled with water except for a cushion of air in the upper portion of the expansion tank. When the water is heated, it expands, compressing the air in the expansion tank. If, for any reason, this air were completely displaced from the tank, there would no longer be a cushion; an increase in water temperature would cause a corresponding increase in volume; pressure would force the relief valve open to discharge the excess volume. To correct such a condition, the expansion tank must be drained enough to permit the tank to fill with air.

Clean boiler surfaces at regular intervals.

Do not draw water from boiler while in use. When adding water while boiler is in operation, DO NOT OPEN SUPPLY VALVE FULLY, BUT ADD WATER SLOWLY.

CARE OF BOILER

At end of heating season, clean boiler thoroughly and spray flue surfaces with light lubricating or crankcase oil using gun with extended stem so as to reach all corners. When replacing cleanout door, boiler putty is necessary for sealing.

Lubricate circulator in accordance with lubrication instructions on decal.

Clean and remove flue pipe where feasible.

Keep system filled with water; in other words, DO NOT DRAIN BOILER.

IF BOILER IS NOT USED DURING WINTER, IT MUST BE FULLY DRAINED TO PREVENT DAMAGE CAUSED BY FREEZING.



CONSTRUCTION DETAILS

Three different cored section castings are used to make up the VP Package Boiler (See Fig. 9).

1. Front section with 1-1/2" supply tapping, and Eliminaire" (5-3/8" thick).
2. Back section (4-3/4" thick).
3. Center section (6" thick).

The [illegible] section [illegible] order to give the boiler sufficient [illegible] for the combustion chamber and to provide the necessary water content for satisfactory operation of the Canadian H.W.S. coil.

[illegible] tapping [illegible] water heater opening [illegible] provide [illegible] section (See Fig. 10).

PLATE WORK

Burner Plate and Door

These are integral components and made of steel. A refractory radiation shield is used to protect the burner plate from heat.

CANOPY

An aluminized sheet-steel canopy is provided. Smokepipe sizes are as follows.

No. of Sections	Smokepipe Size
[illegible]	7"
[illegible]	7"
[illegible]	8"

INSULATION

The entire jacket is insulated with 1/2" Fiberglas. An additional 1" of insulation is used on the canopy.

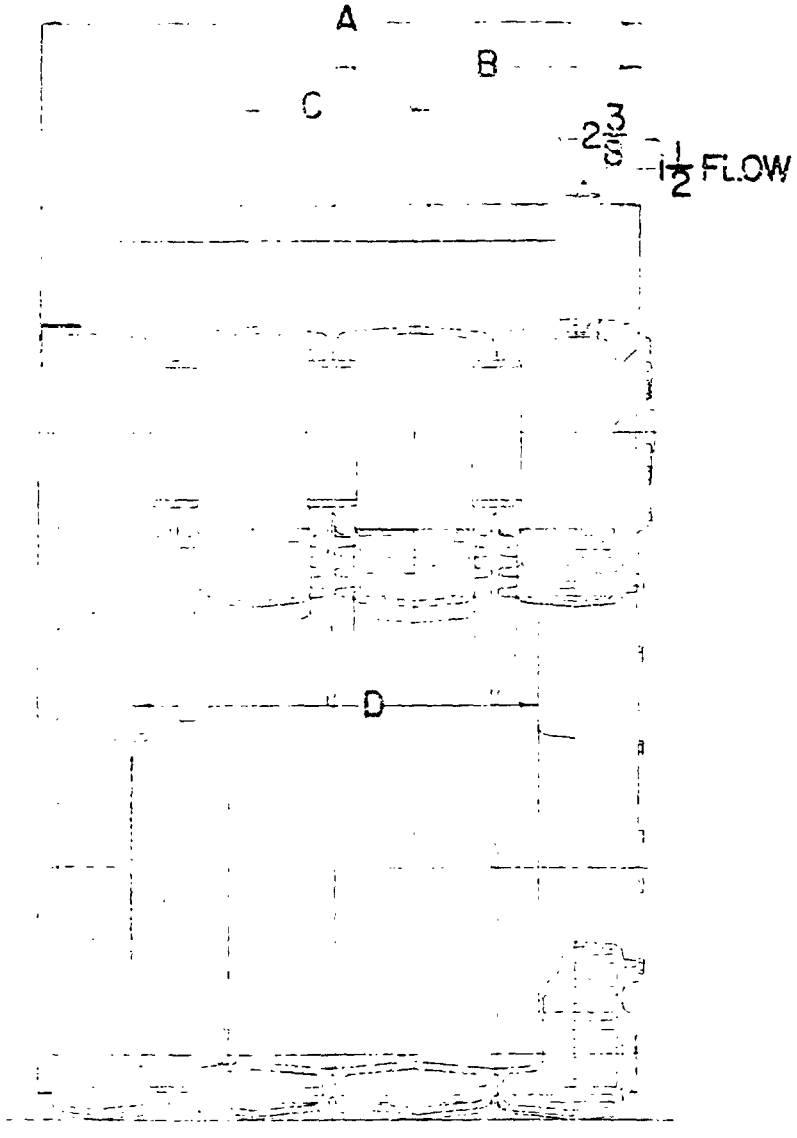

SECTION THRU BOILER

NUMBER OF SECTIONS	DIMENSIONS A	B	C	D
3	16 3/8	8 1/16	6 12/16	9 1/8
4	22 5/8	11 7/16	6 15/16	15 1/8
5	28 5/8	14 1/16	7 15/16	21 1/8

FIGURE 9

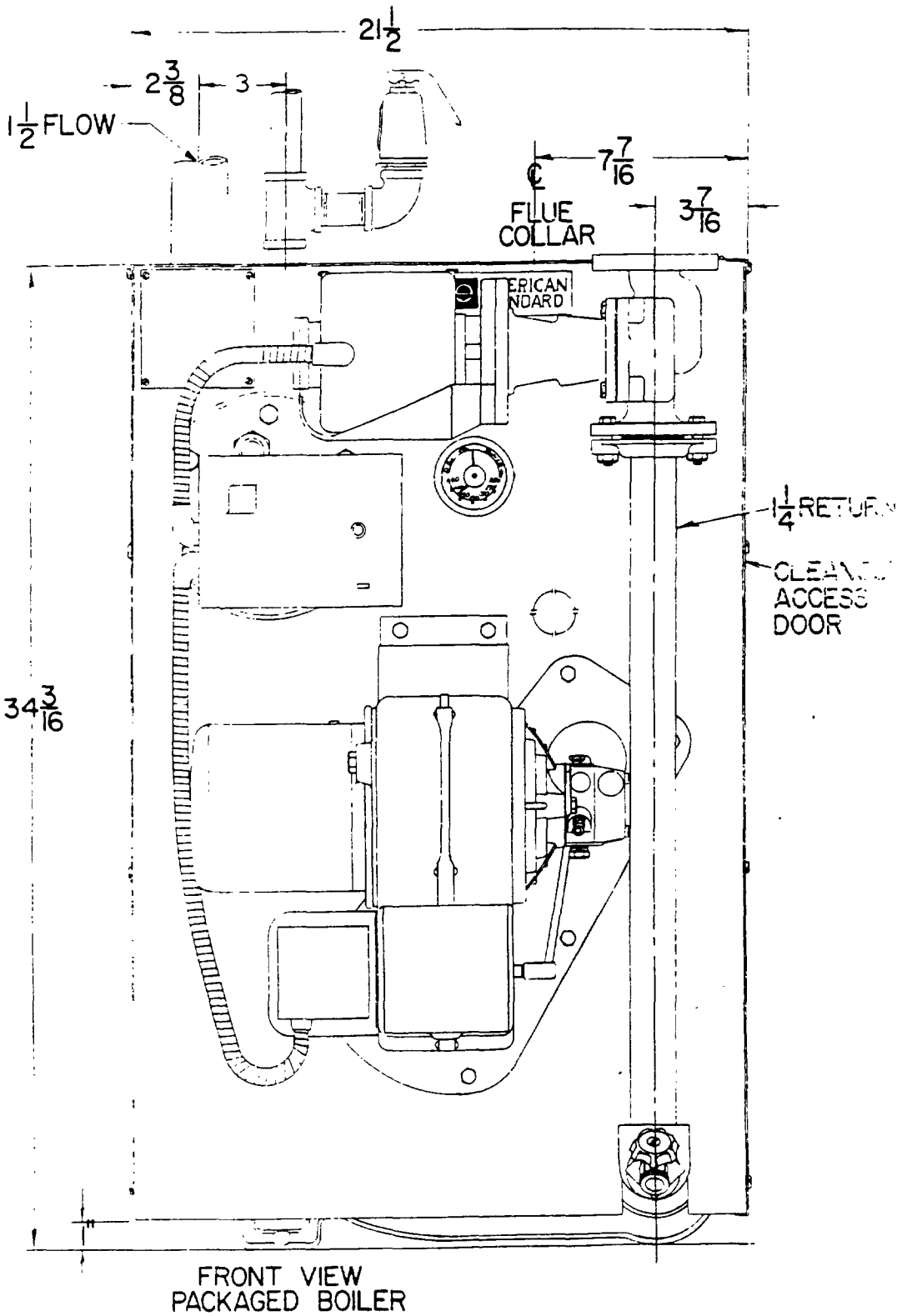

FIGURE 10

Although the basic boiler remains the same, the differences exist in the wiring procedure with or without water heater (See Fig

COMBUSTION CHAMBER

The VP Boiler has a one-piece precast Refractory Combustion target wall specially designed for maximum performance and efficiency.

OIL BURNER

The Model DH-F oil burner is used with the VP boiler. This burner is especially designed with a conventional flame-retention head to give maximum performance and efficiency in the VP boiler.

CONTROLS

Controls for the VP Packaged Boiler are conventional.

JACKET

Jacket design for the VP Packaged Boiler is conventional as with other A-S boilers.

CAUTION TO INSTALLER AND HOMEOWNER

This hydronic heating boiler incorporates the best in engineering and manufacturing techniques and will give years of good service and trouble-free operation if properly treated.

The heat transfer surface has been carefully designed to give optimum performance and reliability. However, the presence of contaminants such as scale, sediment, and boiler sealing compounds in the section waterways may serve to insulate the heat transfer surface and cause premature failure of the sections.

Scale build-up can be prevented by good installation practices which eliminate addition of makeup water to the system.

Sediment which may accumulate in the boiler should be flushed out on a regular basis in accordance with recommended maintenance practices.

Occasionally, leaks will be detected in the system. These leaks are usually of such a nature that they may be prevented or corrected by good workmanship. Every effort should be made to correct them without the use of boiler sealing compounds. If sealing compounds are used, they should be used as sparingly as possible and never in excess of the manufacturers' recommendations. Following their use, the boiler must be thoroughly flushed out. Otherwise, serious damage may result.