APPLICATION
BASIC INSULATION
PIPE AND FITTINGS

URETHANE:

C. 9.2 Foamglas flange covers from 8 inches OD up to and including 12 inches OD shall have a minimum of 3 wraps of 3/4 inch wide BF* tape with a 16 ga s/s wire positioned over each wrap. Figure 43.

FIG. 43

'D' — FROM 8" TO 12¼" O.D.
MIN. OF 3 WRAPS OF TAPE AND WIRE.

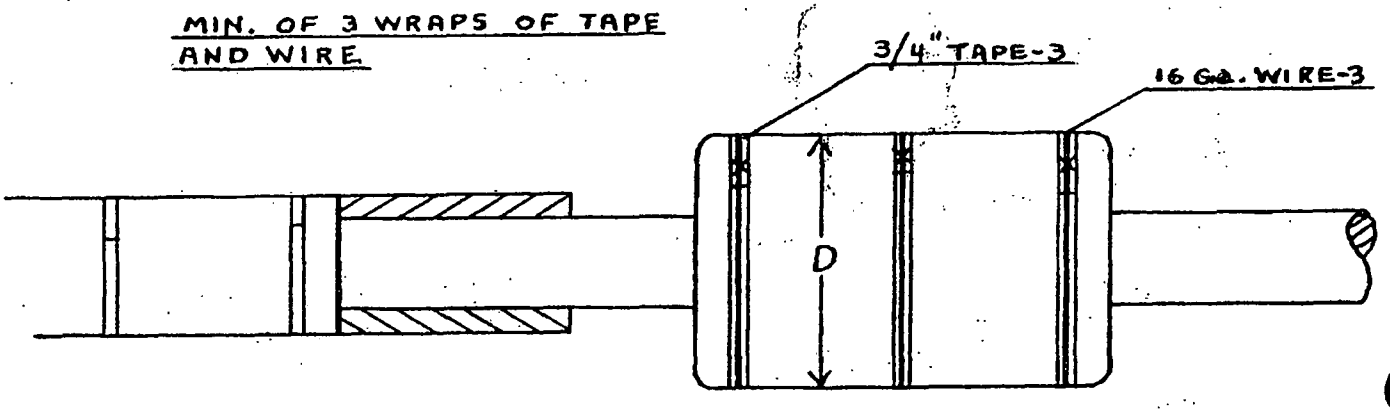

9.3 Foamglas flange covers over 12 inches OD shall have a minimum of 4 wraps of 1-1/2 inch wide BF tape with a 3/8 inch wide s/s band positioned over each wrap. See figure 44.

FIG. 44

'D' — OVER 12" O.D.
MIN. OF 4 WRAPS OF TAPE AND WIRE.

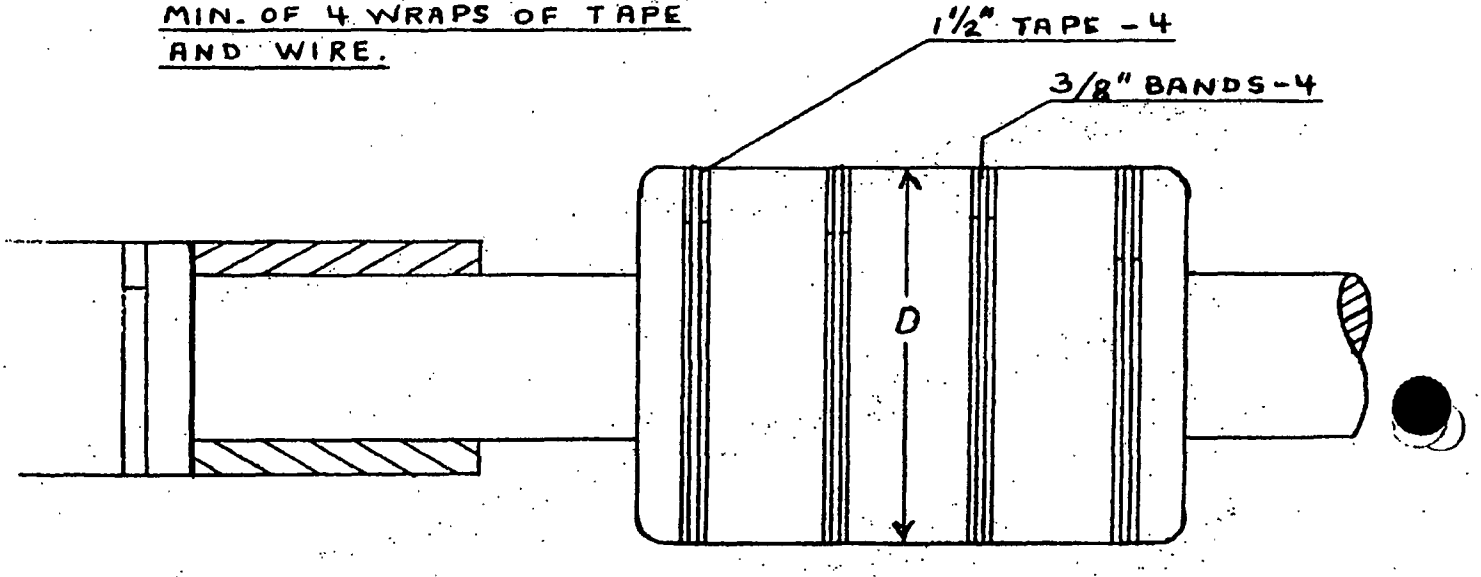

* Black Friction