In re: All Asbestos Litigation Filed by The Simmons Firm, Circuit Court, Third Judicial District, Madison Cty., IL; 8/28/03

INSPECTION

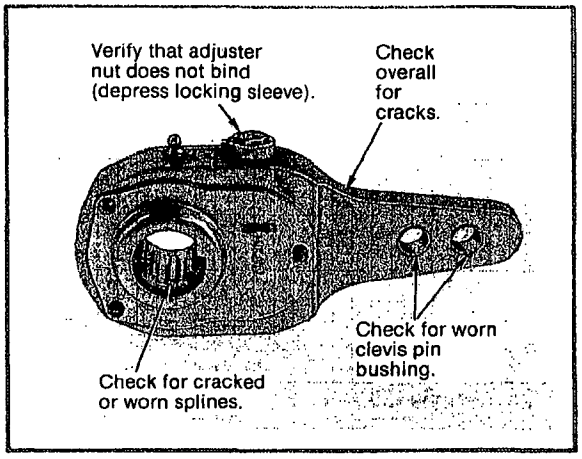

Manual Slack Adjuster Inspection

NOTE: This information is general in nature. For specific slack adjuster inspection guidelines, refer to manufacturer's instructions.

1. Check clevis for cracks and bushing wear. Replace as necessary.

2. Check splines for chipped teeth and deformation. Replace as necessary.

3. Depress locking sleeve and turn adjuster nut with wrench at least one turn in each direction. If binding is present or if excessive force is required to rotate, replace slack adjuster.

CAUTION: If any slack adjuster defect is found, it should be replaced. Do not attempt to repair a faulty slack adjuster!

Automatic Slack Adjuster Inspection. Refer to manufacturer's instructions.

Air Chamber Inspection

WARNING: To prevent personal injury, be sure to "cage" spring before removing spring brake type air chamber.

NOTE: This information is general in nature. For specific air chamber inspection guidelines, refer to manufacturer's instructions.

1. Check for air leaks, cracked housing, bent pushrod, loose clamp ring, clogged vent holes, or loose air fitting. Repair or replace as recommended by manufacturer.

2. If air chamber is repaired or replaced, check distance from clevis pin hole centerline-to-air chamber face. This distance must measure 2-5/8" ± 1/16" *(66.7 ± 1.59 mm)* *except Mack 16-1/2" *(419.1 mm)* brake which is 4-3/8" *(111.1 mm)*.

3. If a new air chamber is installed, insure that cut-off pushrod does not project too far into clevis. Minimum clearance: clevis centerline to pushrod end should be 7/8" *(22.2 mm)*.

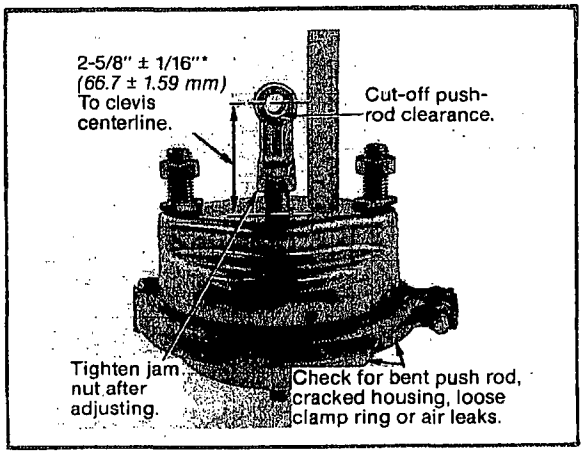

In re: All Asbestos Litigation Filed by The Simmons Firm, Circuit Court, Third Judicial District, Madison Cty., IL; 8/28/03