PLAINTIFF'S EXHIBIT
WR-790b

Johns-Manville
Sales Corporation

Research & Development Center

Ken-Caryl Ranch
Denver, Colorado 80217
(303) 979-[illegible]

February 17, 1978

Mr. J. C. Kahr
Westinghouse Airbrake Division
Wilmerding, Penn. 15148

Re: WR-3505, Chemical Content, Composition Brake Shoes
Letter from Mr. I. G. Hendry to Mr. R. J. Cook.
January 11, 1978

Dear Joe:

The subject correspondence requests information pertinent to our possible past or current use of poly chlorinated biphenyls (PCB's) in the formulation of our COBRA brake shoes.

Confirming my phone call to you on February 15, 1978, we have not previously utilized and we do not currently utilize PCB's in the formulation of our composition brake shoes.

Please let us know if we can be of any further assistance.

Sincerely,

H. J. Reynolds

vm

cc:
W. I. Graham - 3-05
E. M. Feiger - 1-06
T. Supoci - R&D
N. F. Morrone - R&D
W. F. Peters - R&D

PRODUCED
JM - 83

COPY FORM	INITIALS	DATE

BOX NUMBER	SEGMENT NO.	REQUESTING PARTY

NOTES

04-01172

SF003337

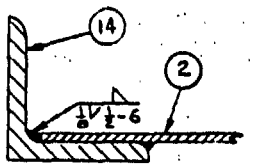

SECTION "C-C"
(G-10)

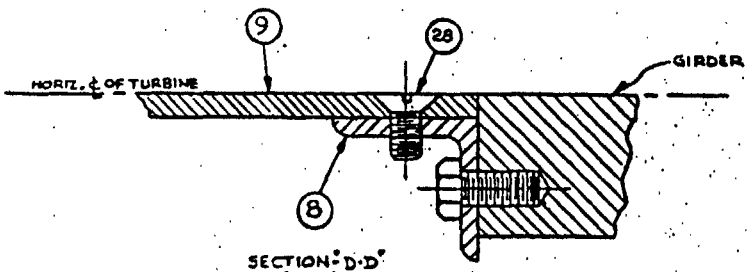

SECTION "D-D"
(E-10)

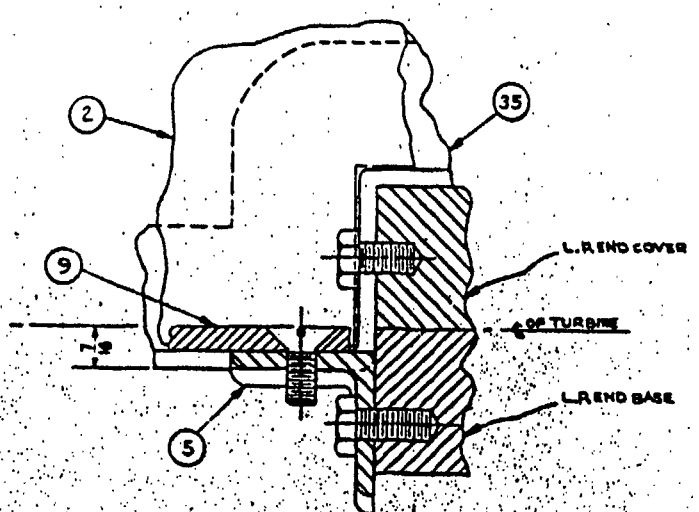

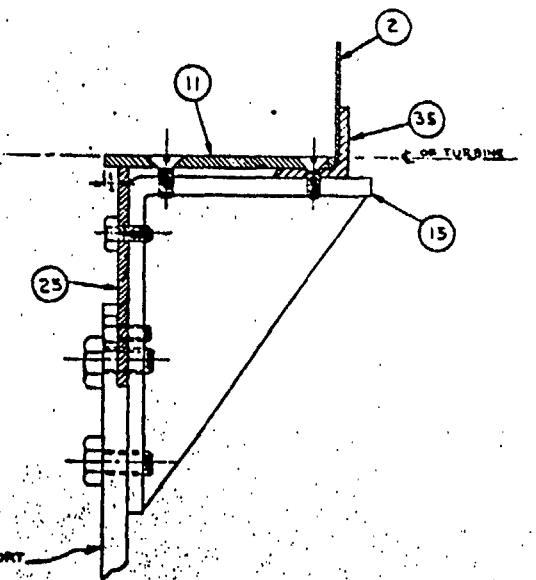

SECTION "F-F"
(F-9)

W.S. et al.

MERCHANT MARINE

6" MANEUVERING VALVE & STEAM STRAINER

INSULATION - DETAILS, ASS'Y & BILL

M-17-E-979

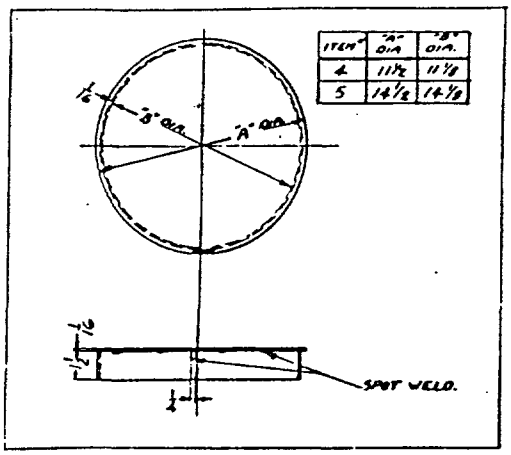

ITEM #	"A" DIA	"B" DIA.
4	11½	11⅛
5	14½	14⅛

MANEUVERING VALVE INSULATION COMP.		1
PLASTIC INSULATION (SEE NOTE #2)		1
PLATE 3" x 9" x 20" OF 1/16 PC	1516	1
NUT COVER (MAKE FROM #3, SEE NOTE #1)	—	2
NUT COVER (MAKE FROM #3, SEE NOTE #1)	—	1

NOTE #1:- ALL NUT COVERS TO BE PAINTED.

NOTE #2:- TO BE FURNISHED IN FIELD AND TO BE HIGH TEMPERATURE TYPE.

MISS. - IN RE: ABRAMS, et al.

1993

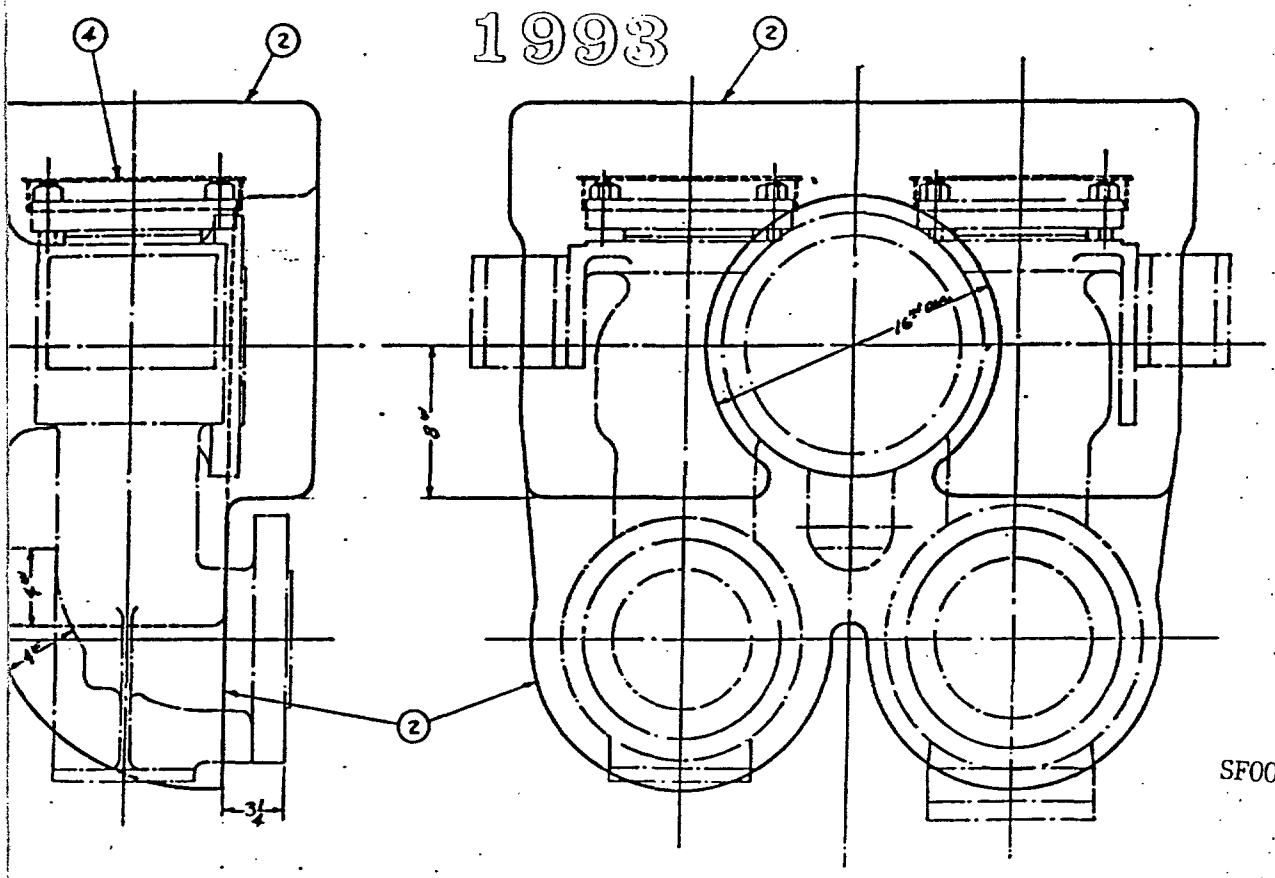

SF003338

ABRAMS, et al.

M-17-E-979

3

SEE NOTE 2

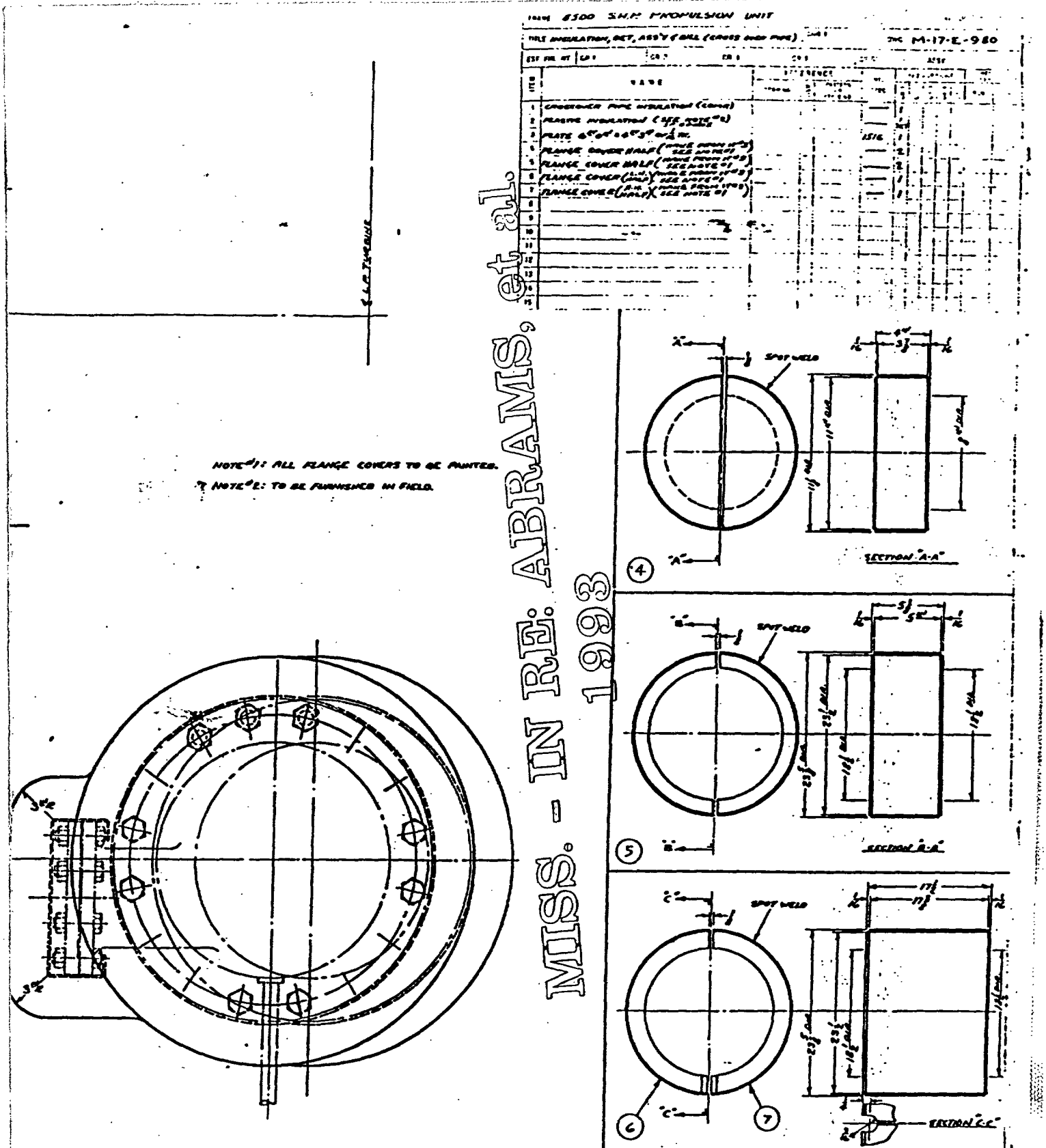

MISS. - IN RE: ABRAMS, et al.
1993

BRAMS, et al.

SF003339

M-17-E-980

SEE NOTE 2

S. - IN RE: ABRAMS, et al.
1993

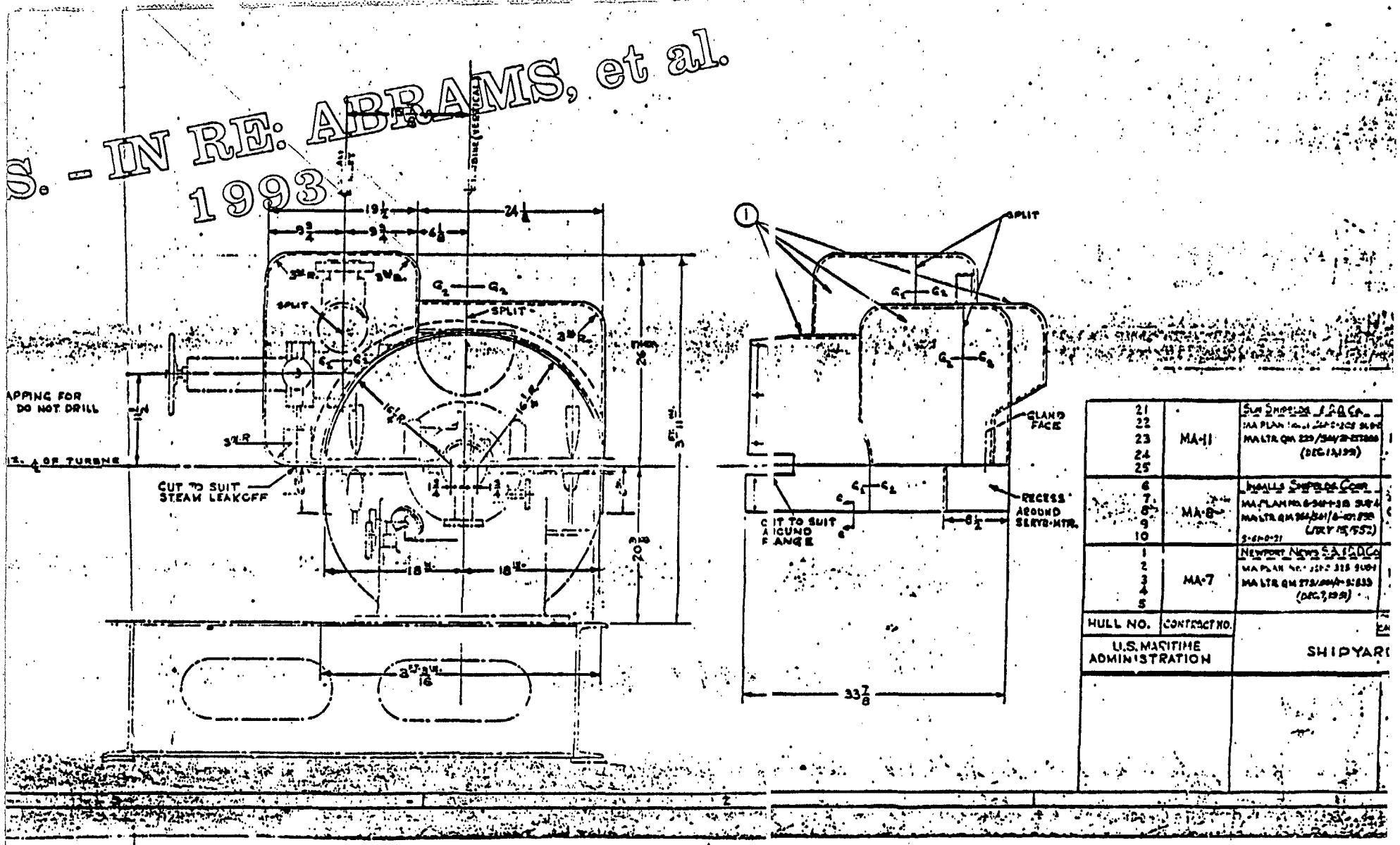

21 22 23 24 25	MA-11	SUN SHIPBUILDING & DRY DOCK CO. MA PLAN NO. 6-2017-203 SUB-4 MA LTR OM 229/SHIP-87886 (DEC 13, 1972)
6 7 8 9 10	MA-8	INGALLS SHIPBUILDING CORP. MA PLAN NO. 6-2017-38 SUB-4 MA LTR OM 264/261/6-401.836 (JULY 15, 1952) S-6140-21
1 2 3 4 5	MA-7	NEWPORT NEWS S.B. & D.D. Co. MA PLAN NO. 6-2017-315 SUB-4 MA LTR OM 273/SHIP-51833 (DEC. 7, 1951)
HULL NO.	CONTRACT NO.	
U.S. MARITIME ADMINISTRATION		SHIPYARD

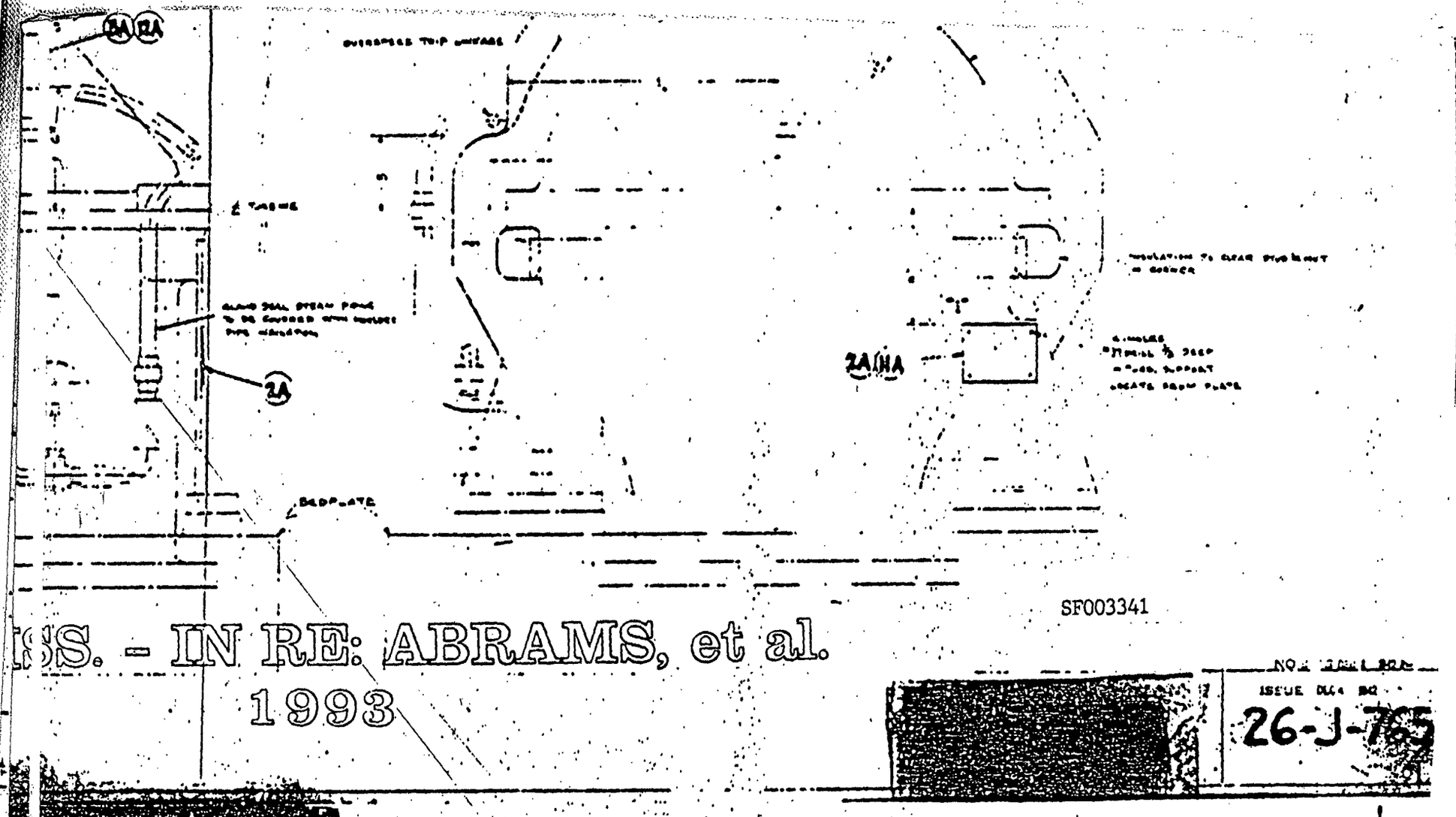

SF003341

SS. - IN RE: ABRAMS, et al.
1993

26-J-765

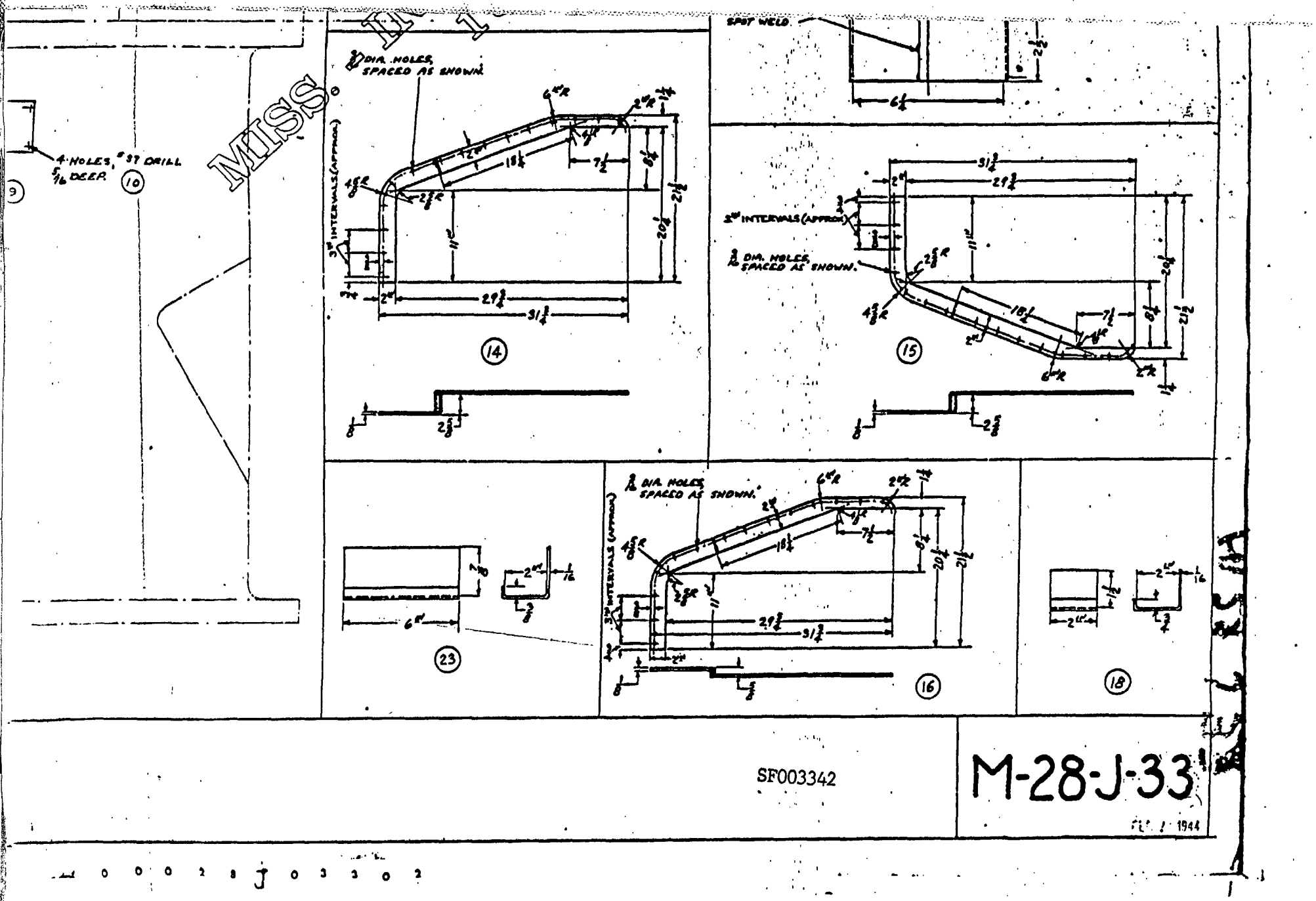

SF003342

M-28-J-33

1944

0 0 0 2 8 J 0 3 3 0 2

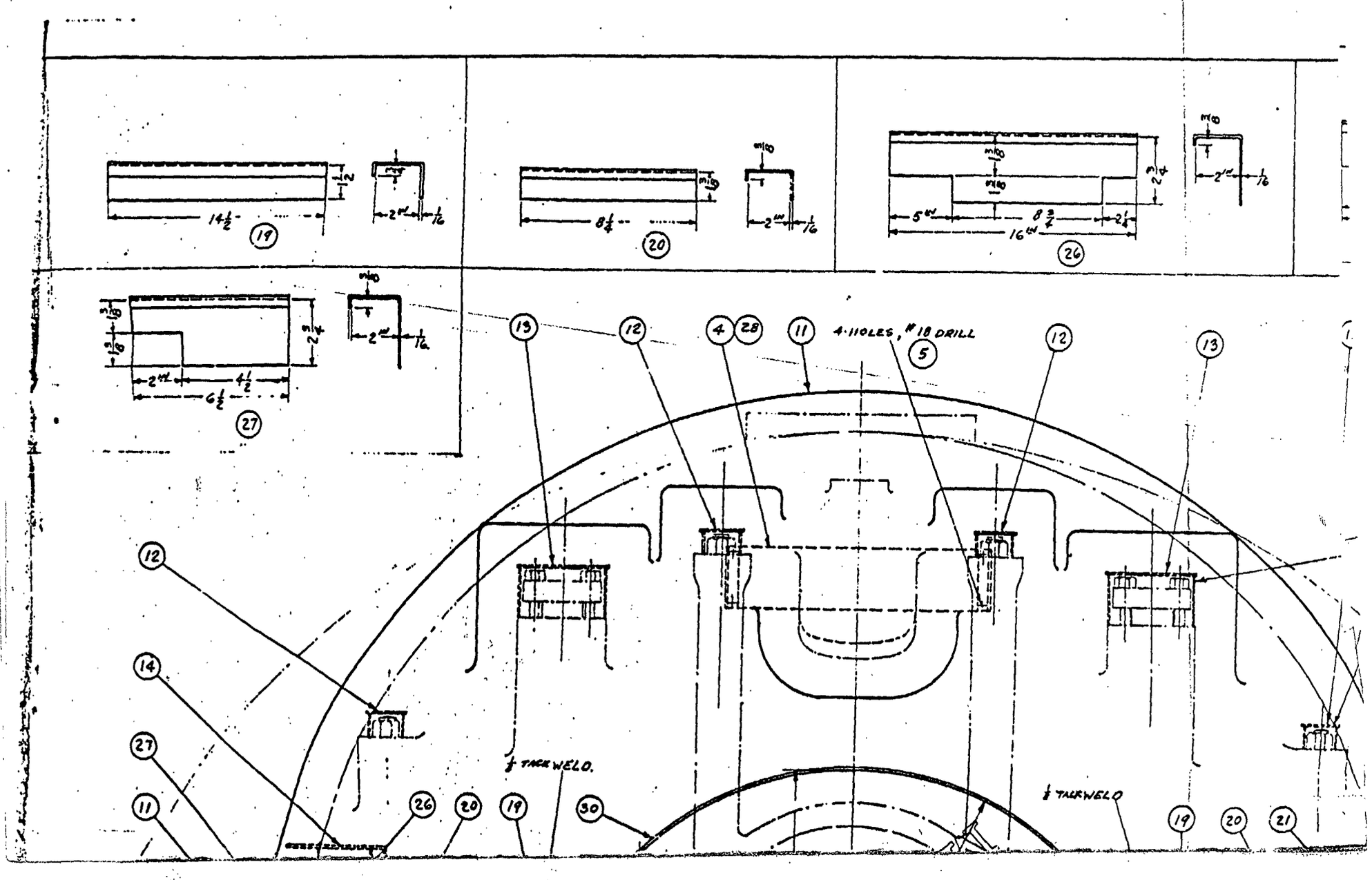

SF003343
4-110LES, #18 DRILL
1/8 TACK WELD.
1/8 TACK WELD

M-28-J-34
SF003344

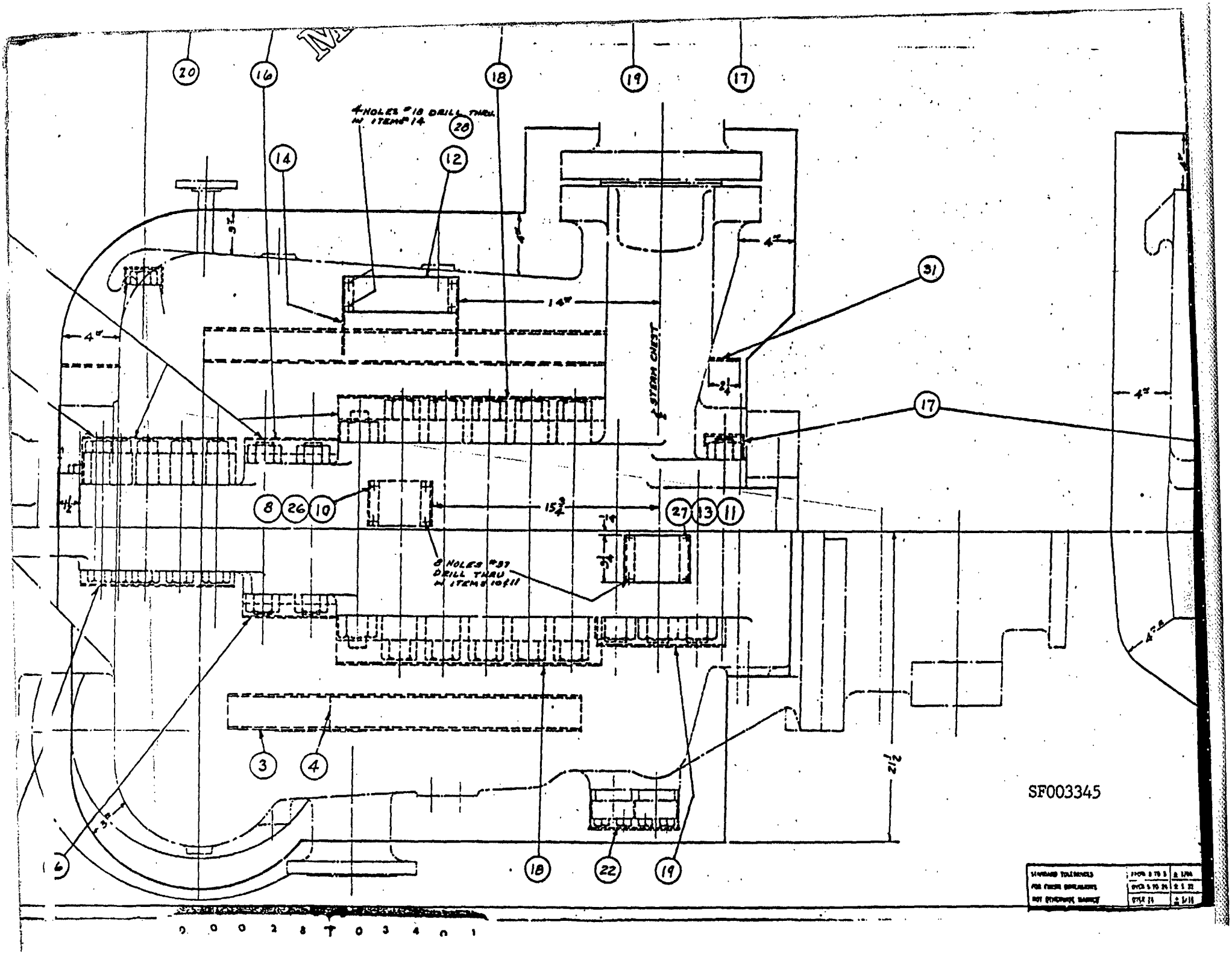
20
16
18
19
17
4 HOLES Ø18 DRILL THRU W/ ITEMS 14
28
14
12
31
17
8
26
10
27
13
11
3
4
6
18
22
19
STEAM CHEST
14"
15 3/4
SF003345

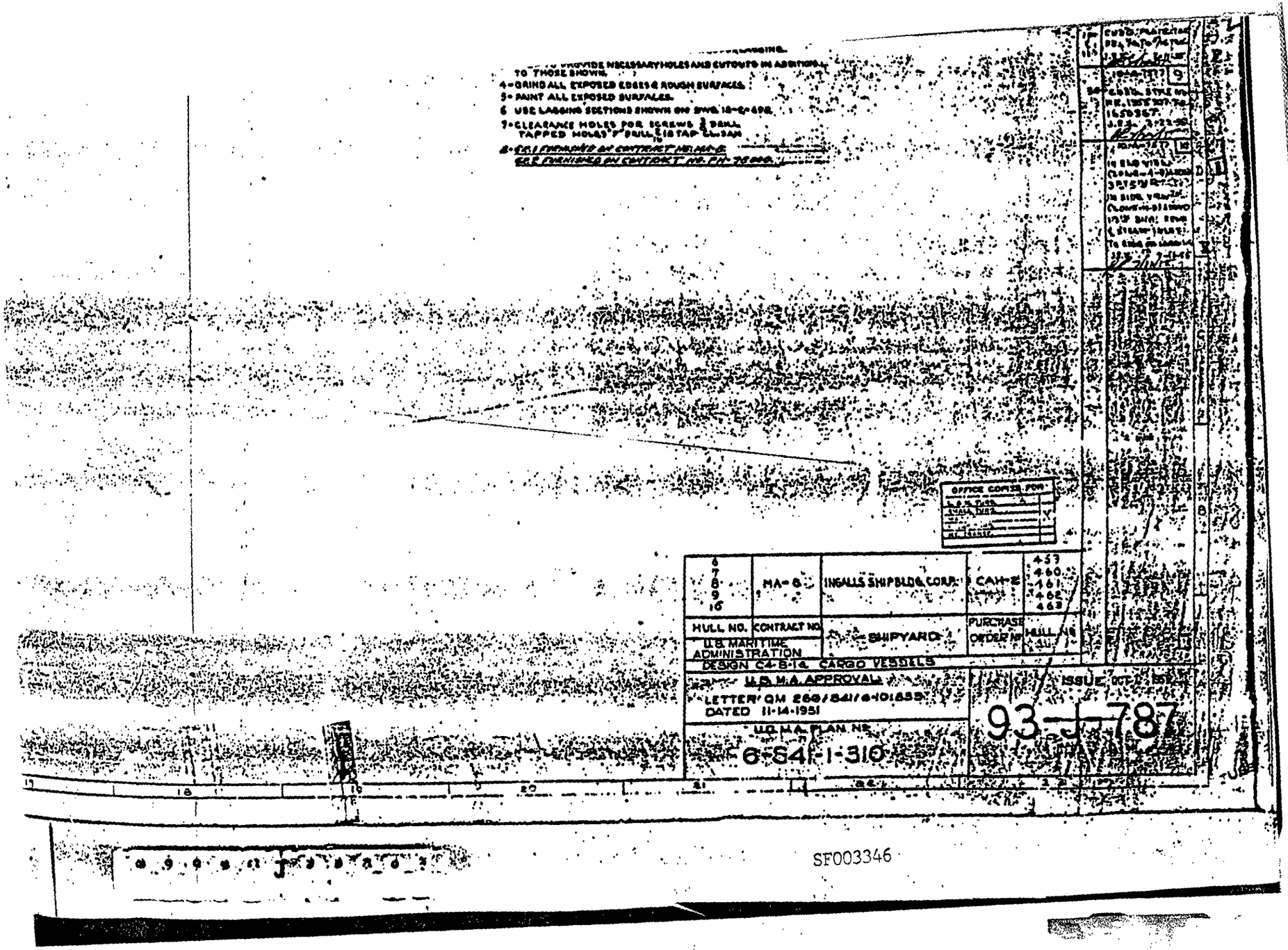

TO THOSE SHOWN.
4-GRIND ALL EXPOSED EDGES & ROUGH SURFACES.
5-PAINT ALL EXPOSED SURFACES.
6 USE LAGGING SECTIONS SHOWN ON DWG. 18-C-492.
7-CLEARANCE HOLES FOR SCREWS 3/4 DRILL
TAPPED HOLES 7/8" DRILL 5/16 TAP CL. SAN
OFFICE COPIES FOR
6
7
8
9
10
MA-8
INGALLS SHIPBLDG. CORP.
CAH-2
453
460
461
462
463
HULL NO.
CONTRACT NO.
SHIPYARD
PURCHASE ORDER NO.
HULL NO.
U.S. MARITIME ADMINISTRATION
DESIGN C4-S-1a CARGO VESSELS
U.S. M.A. APPROVAL
LETTER QM 260/S41/6-101.855
DATED 11-14-1951
U.S. M.A. PLAN NO.
6-S41-1-310
ISSUE
93-J-787

SF003346

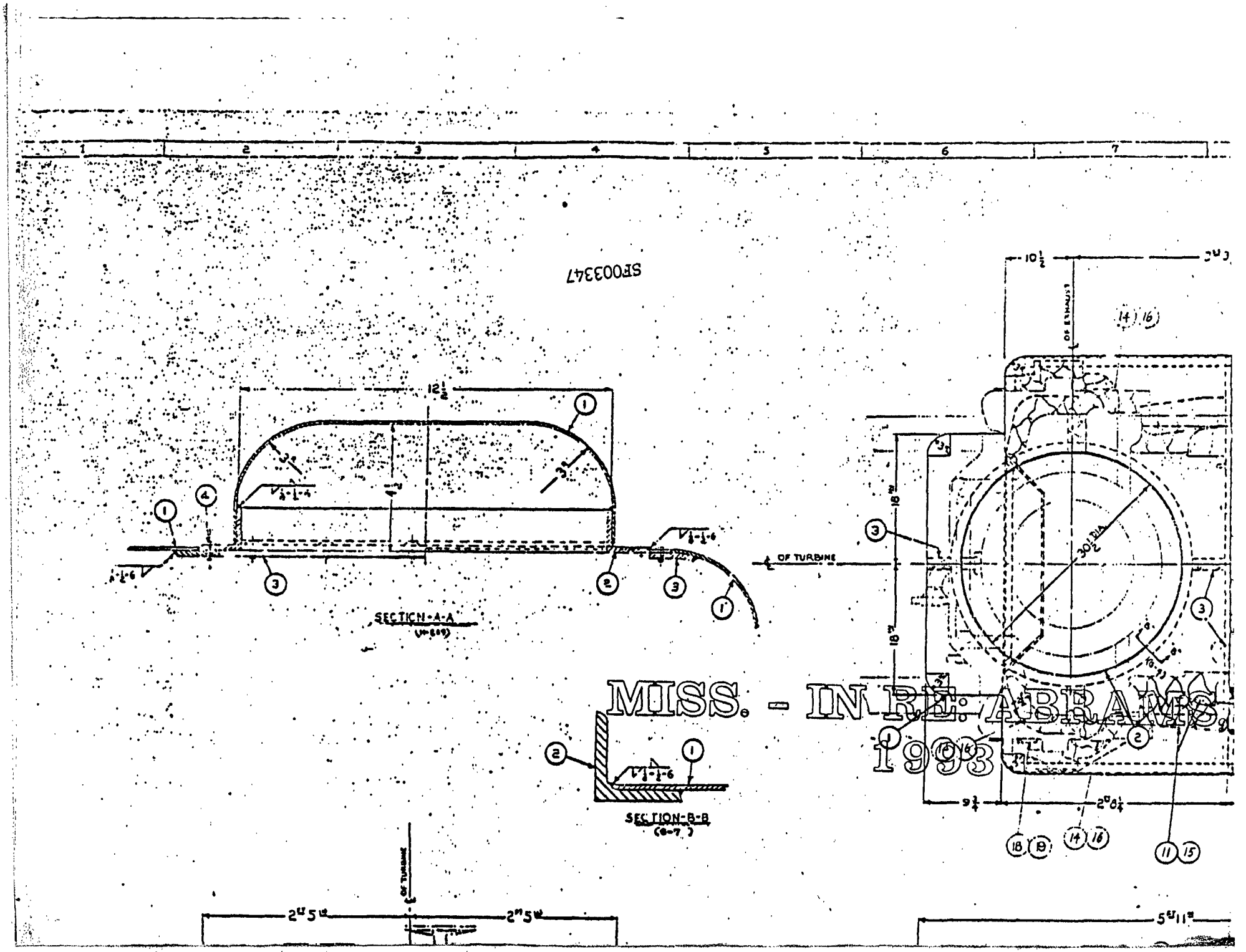
SF003347
SECTION-A-A
SECTION-B-B
OF TURBINE
OF EXHAUST
12½
10½
30½ DIA
9¾
2'8¼
2'5"
5'11"
MISS. - IN RE: ABRAMS
1993

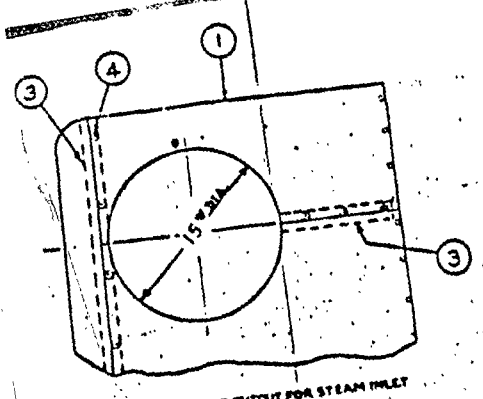

VIEW OF CUTOUT FOR STEAM INLET

MISS. -

WESTINGHOUSE PROPRIETARY

THIS DOCUMENT CONTAINS INFORMATION PROPRIETARY TO WESTINGHOUSE ELECTRIC CORPORATION AND IS TO BE USED SOLELY FOR THE PURPOSE FOR WHICH IT IS FURNISHED AND RETURNED UPON REQUEST. THIS DOCUMENT AND EACH INFORMATION IT CONTAINS IS NOT TO BE REPRODUCED, TRANSMITTED, DISCLOSED OR USED OTHERWISE IN WHOLE OR IN PART WITHOUT THE WRITTEN AUTHORIZATION OF WESTINGHOUSE ELECTRIC CORPORATION, MARINE DEPARTMENT, SUNNYVALE, CALIFORNIA.

SF003348

6 7 8 9 10	MA-8	Ingalls Shipbldg. Corp.	CAH-2	459 460 461 462 463
HULL NO.	CONTRACT NO.	SHIPYARD	PURCHASER ORDER	HULL NO.

U.S. MARITIME ADMINISTRATION

DESIGN: C4-S-1a CARGO VESSELS

ISSUE

U.S. MA APPROVAL
LETTER: OM 200/S41/6-10:833
DATE: 14 NOV. 1951

U.S. MA PLAN NO.
6-541-1-309

93-J-79

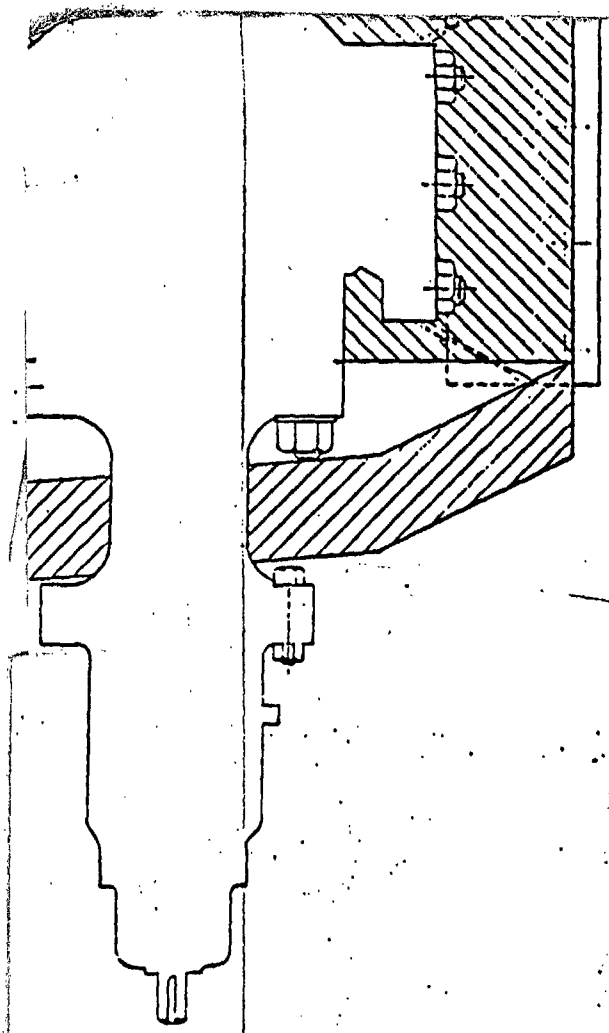

WESTINGHOUSE PROPRIETARY

"THIS DOCUMENT CONTAINS INFORMATION PROPRIETARY TO WESTINGHOUSE ELECTRIC CORPORATION; IT IS SUBMITTED IN CONFIDENCE AND IS TO BE USED SOLELY FOR THE PURPOSE FOR WHICH IT IS FURNISHED AND RETURNED UPON REQUEST. THIS DOCUMENT AND SUCH INFORMATION IS NOT TO BE REPRODUCED, TRANSMITTED, DISCLOSED OR USED OTHERWISE IN WHOLE OR IN PART WITHOUT THE WRITTEN AUTHORIZATION OF WESTINGHOUSE ELECTRIC CORPORATION, M.L.S. DEPARTMENT, SUNNYVALE CALIF. 94088."

SF003349

ISSUE OCT 6TH 1952

97-J-258

E D C B A

7 6 5 4 3 2 1

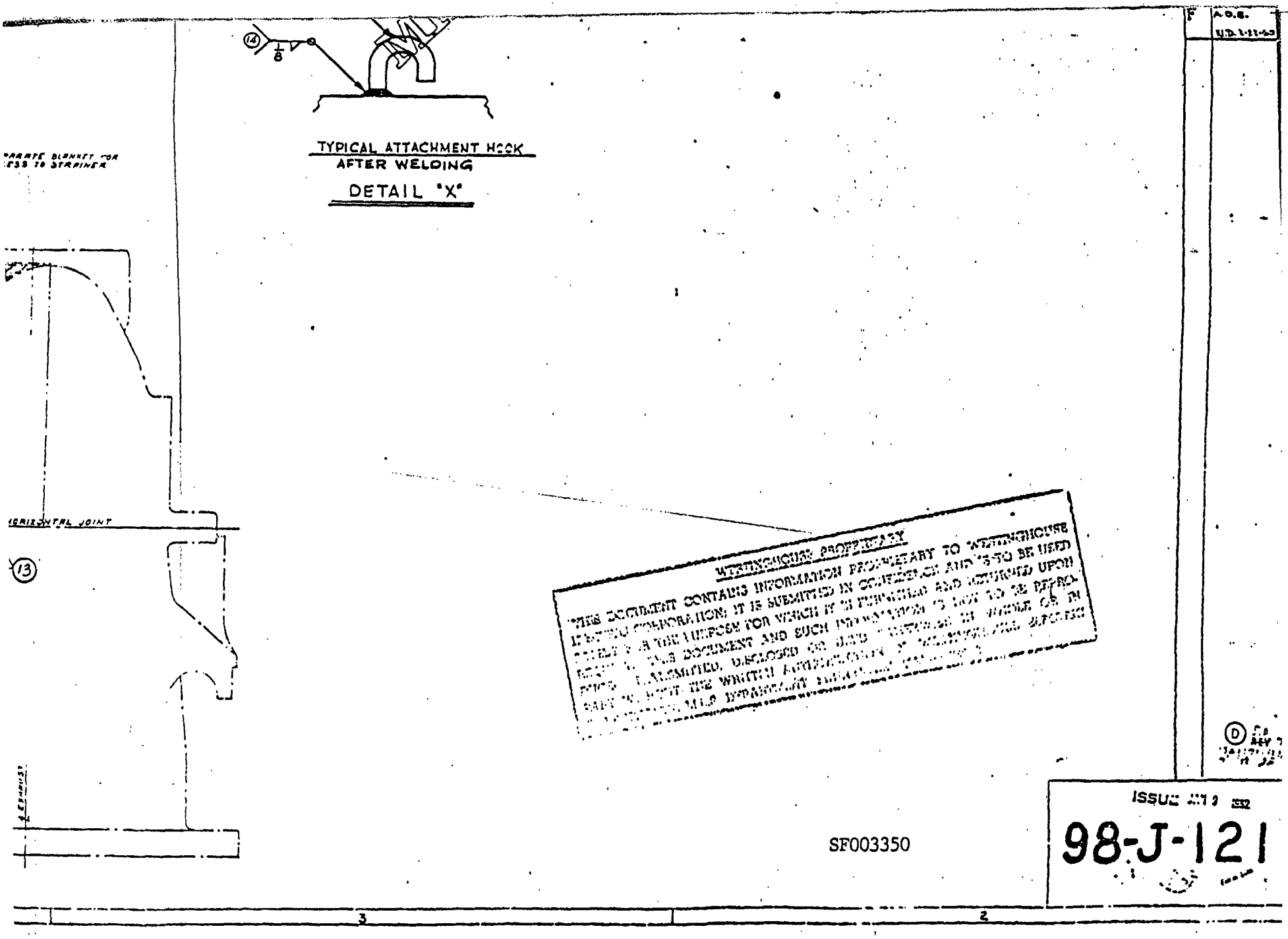

WESTINGHOUSE PROPRIETARY

THIS DOCUMENT CONTAINS INFORMATION PROPRIETARY TO WESTINGHOUSE [illegible] CORPORATION; IT IS SUBMITTED IN CONFIDENCE AND IS TO BE USED [illegible] THE PURPOSE FOR WHICH IT IS FURNISHED AND RETURNED UPON [illegible] THIS DOCUMENT AND SUCH INFORMATION IS NOT TO BE REPRO[illegible] TRANSMITTED, DISCLOSED OR USED [illegible] IN WHOLE OR IN [illegible] WITHOUT THE WRITTEN AUTHORIZATION [illegible]

SF003350

ISSUE [illegible]

98-J-121

SF003351

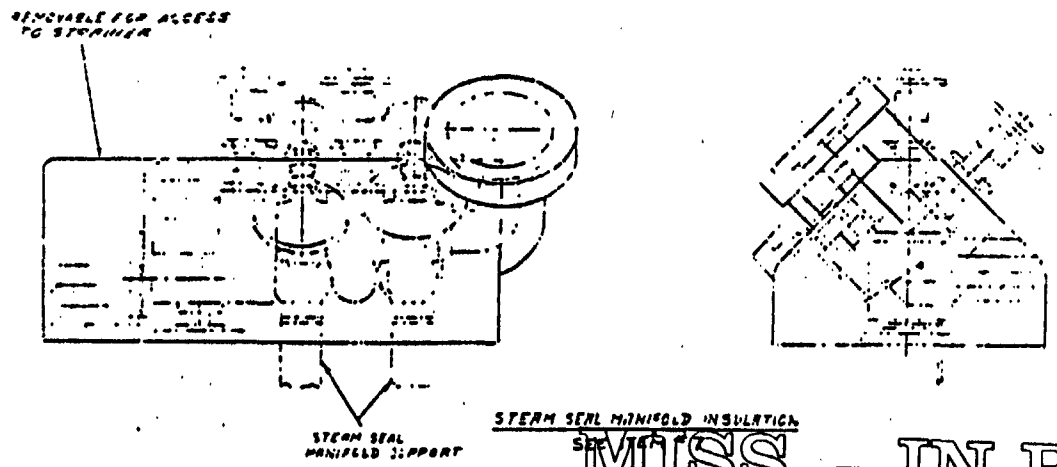

MISS. - IN RE: ABRAM
1993

VALVE LIFTING LEVER-
(HORIZ. POSITION)

INSULATION RECESSED TO CLEAR CAM LEVER & LIFTING ROD

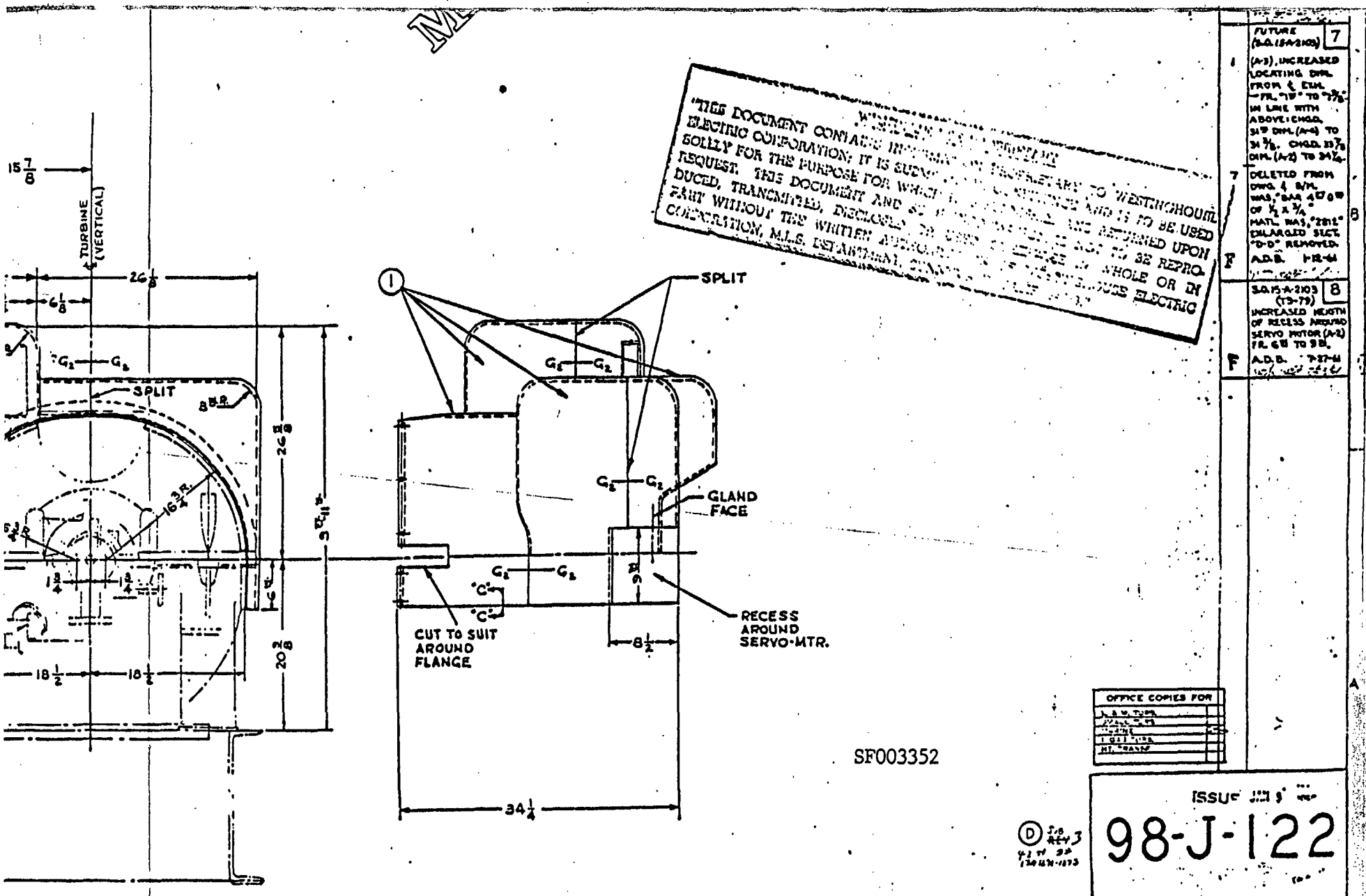

"THIS DOCUMENT CONTAINS INFORMATION PROPRIETARY TO WESTINGHOUSE ELECTRIC CORPORATION; IT IS SUBMITTED TO THE CONFIDENCE AND IS TO BE USED SOLELY FOR THE PURPOSE FOR WHICH IT IS SUBMITTED AND RETURNED UPON REQUEST. THIS DOCUMENT AND SUBMITTED IS NOT TO BE REPRODUCED, TRANSMITTED, DISCLOSED OR USED IN WHOLE OR IN PART WITHOUT THE WRITTEN AUTHORIZATION OF WESTINGHOUSE ELECTRIC CORPORATION, M.L.S. DEPARTMENT, SUNNYVALE, CALIFORNIA."

SF003352

MISS. - IN 1

...PROPRIETARY TO WESTINGHOUSE ...ELY FOR THE PURPOSE FOR WHICH IT IS FURNISHED AND IS TO BE USED ...QUEST. THIS DOCUMENT AND SUCH INFORMATION IS NOT TO BE REPRODUCED, TRANSMITTED, DISCLOSED OR USED OTHERWISE IN WHOLE OR IN PART WITHOUT THE WRITTEN AUTHORIZATION OF WESTINGHOUSE ELECTRIC CORPORATION, M.L.S. DEPARTMENT, SUNNYVALE, CALIF. 94088."

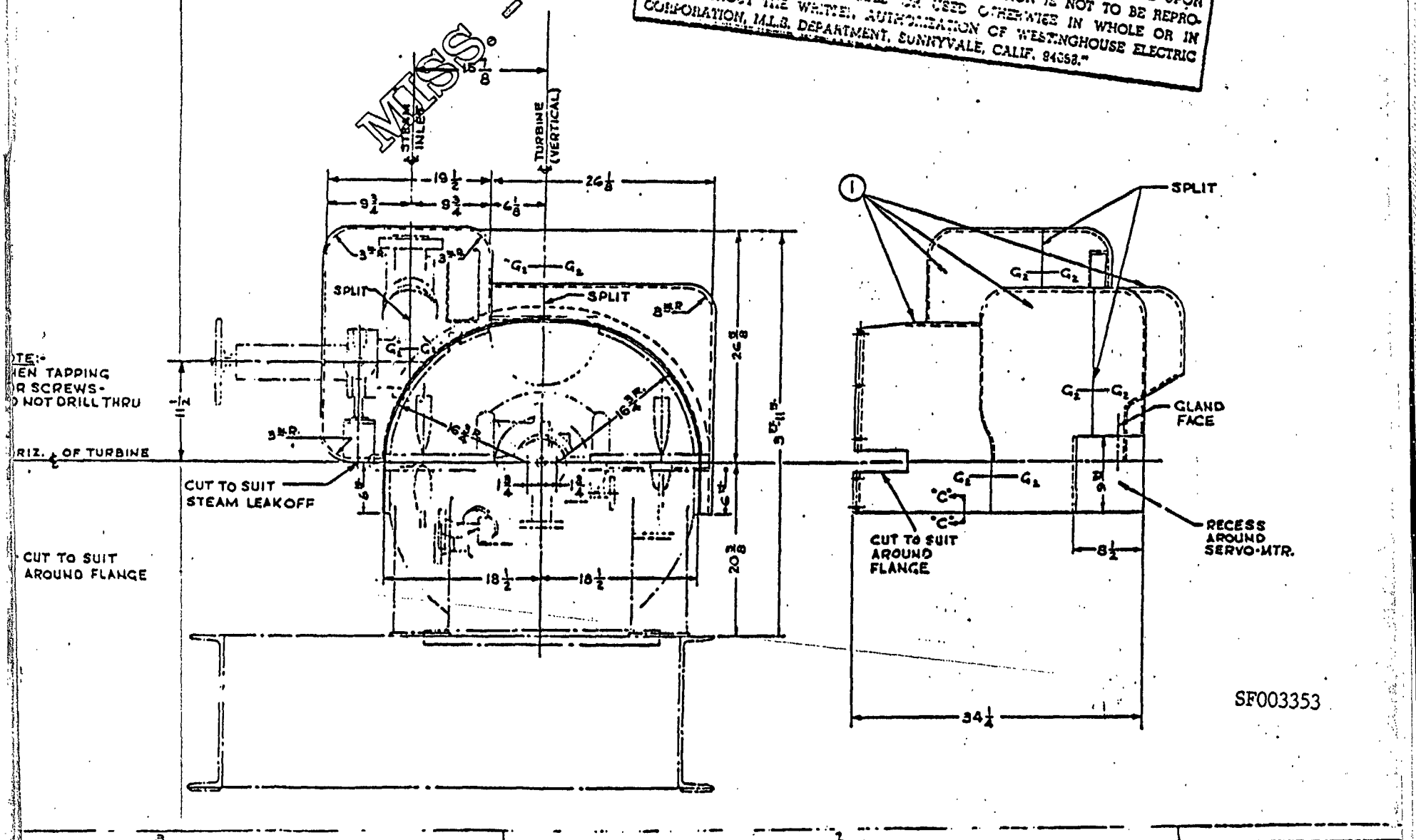

SF003353

98 J 122

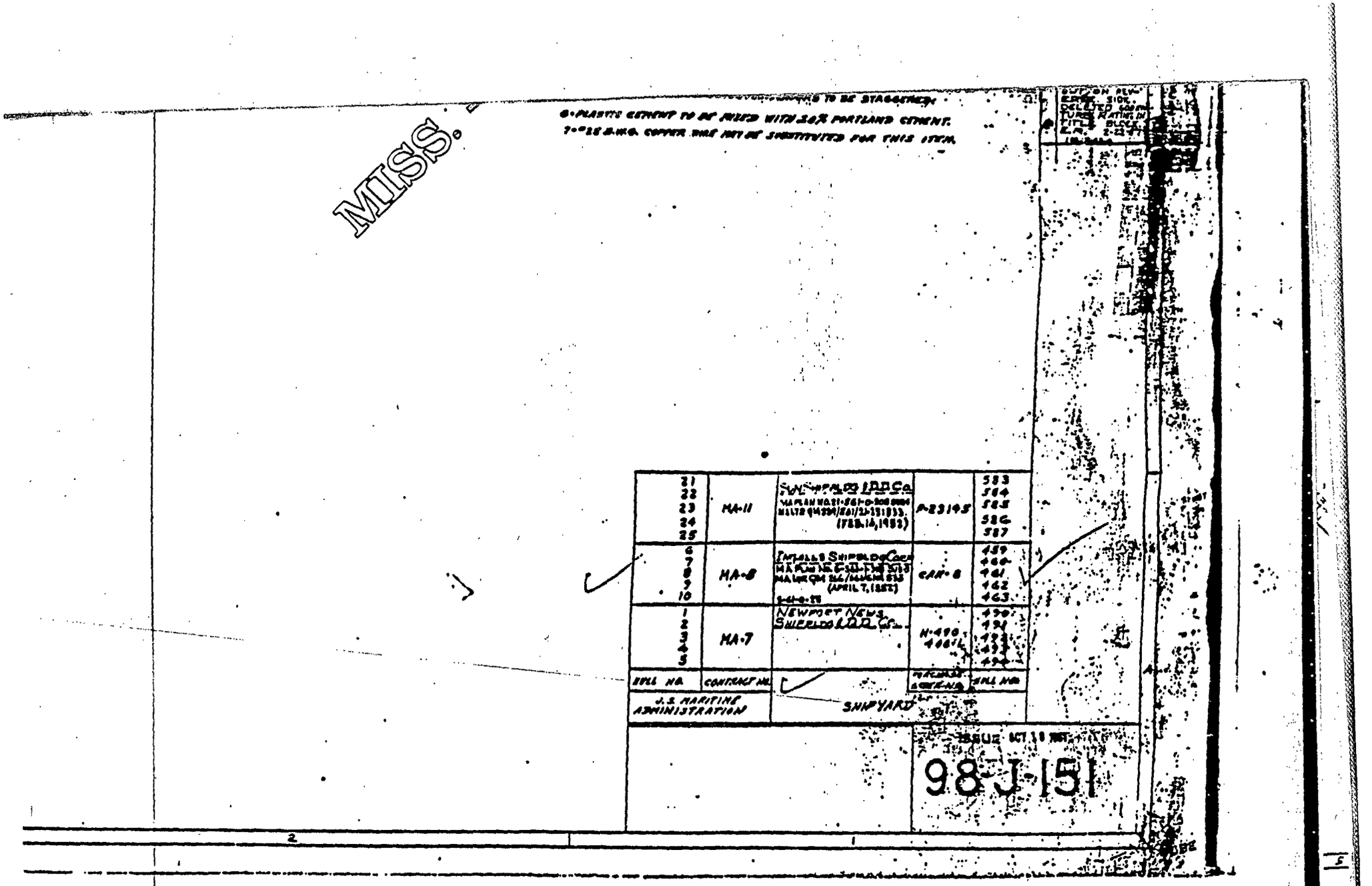

MISS.

...TO BE STAGGERED.

6-PLASTIC CEMENT TO BE MIXED WITH 20% PORTLAND CEMENT.

7-#25 B.W.G. COPPER WIRE MAY BE SUBSTITUTED FOR THIS ITEM.

OUT ON REVERSE SIDE. DELETED 600 FATHOM RATING IN TITLE BLOCK. E.M. 2-22-57

21 22 23 24 25	MA-11	SUN SHIPBLDG & D.D. Co. MA PLAN NO. 21-561-0-[illegible] M.L.T.R. [illegible]/561/21-[illegible] (FEB. 16, 1952)	P-23195	583 584 585 586 587
6 7 8 9 10	MA-8	INGALLS SHIPBLDG CORP MA PLAN NO. [illegible] MA [illegible] QM [illegible] (APRIL 7, 1952) [illegible]	CAR-8	459 460 461 462 463
1 2 3 4 5	MA-7	NEWPORT NEWS SHIPBLDG & D.D. Co.	H-490 [illegible]	490 491 492 493 494
HULL NO.	CONTRACT NO.		PURCHASE ORDER NO.	HULL NO.
J.S. MARITIME ADMINISTRATION		SHIPYARD		

ISSUE OCT 18 1957

98-J-151

SF003354

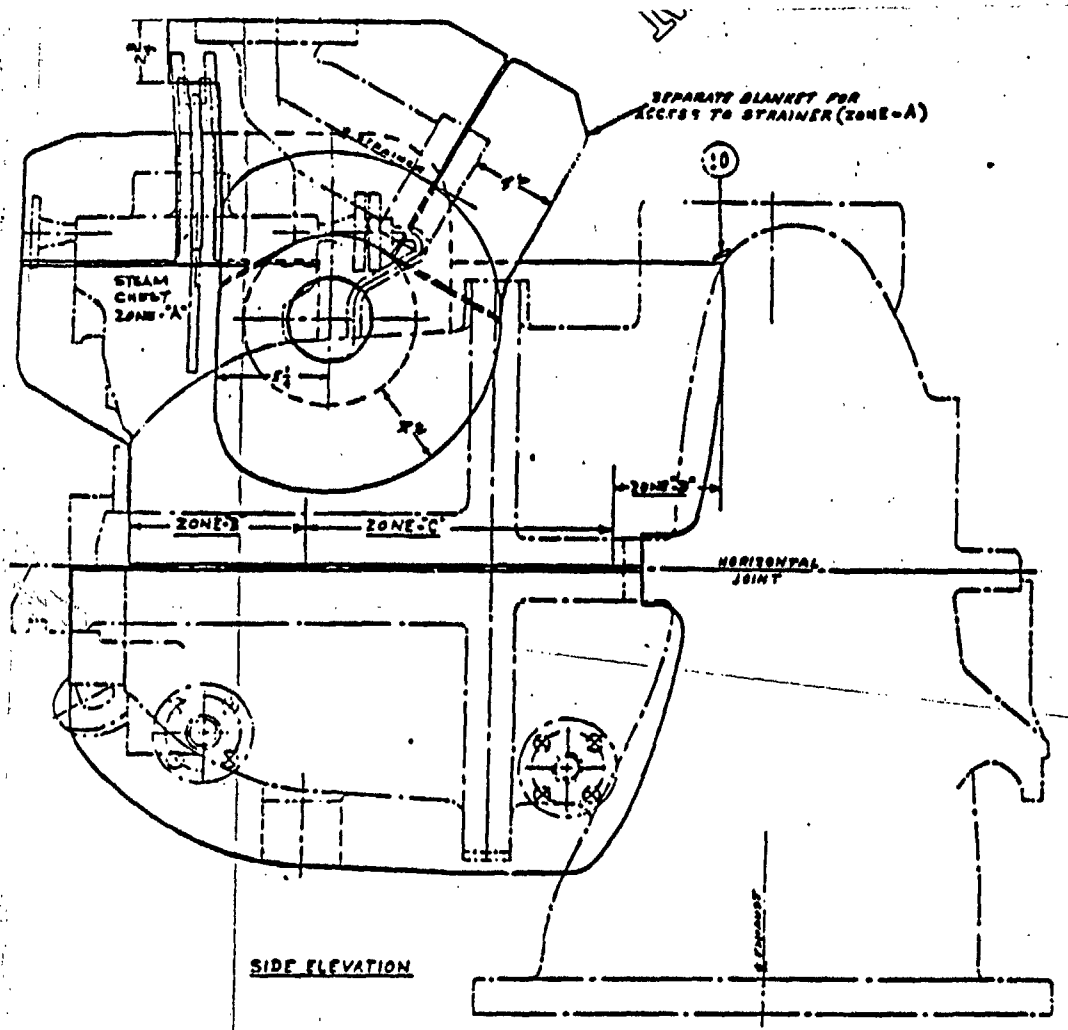

SIDE ELEVATION

TEMPERATURES FOR INSULATION		
ZONE	TEMP °F	INSUL THK
A	751°-855°	4 IN
B	501°-750°	3½ IN
C	339°-500°	3 IN
D	100°-335°	1½ IN

SF003355

98 J 151

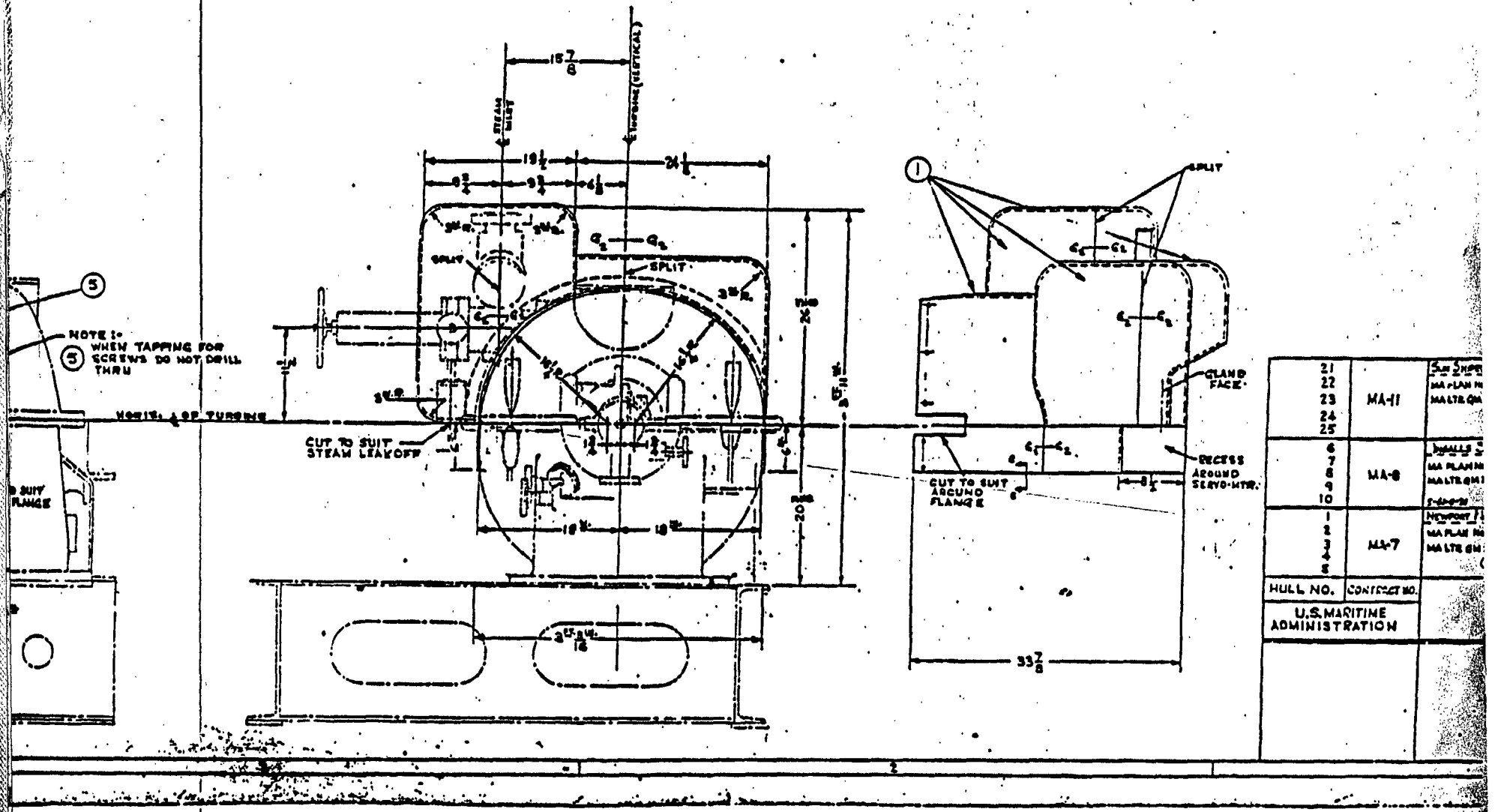

98 J 152

SF003356

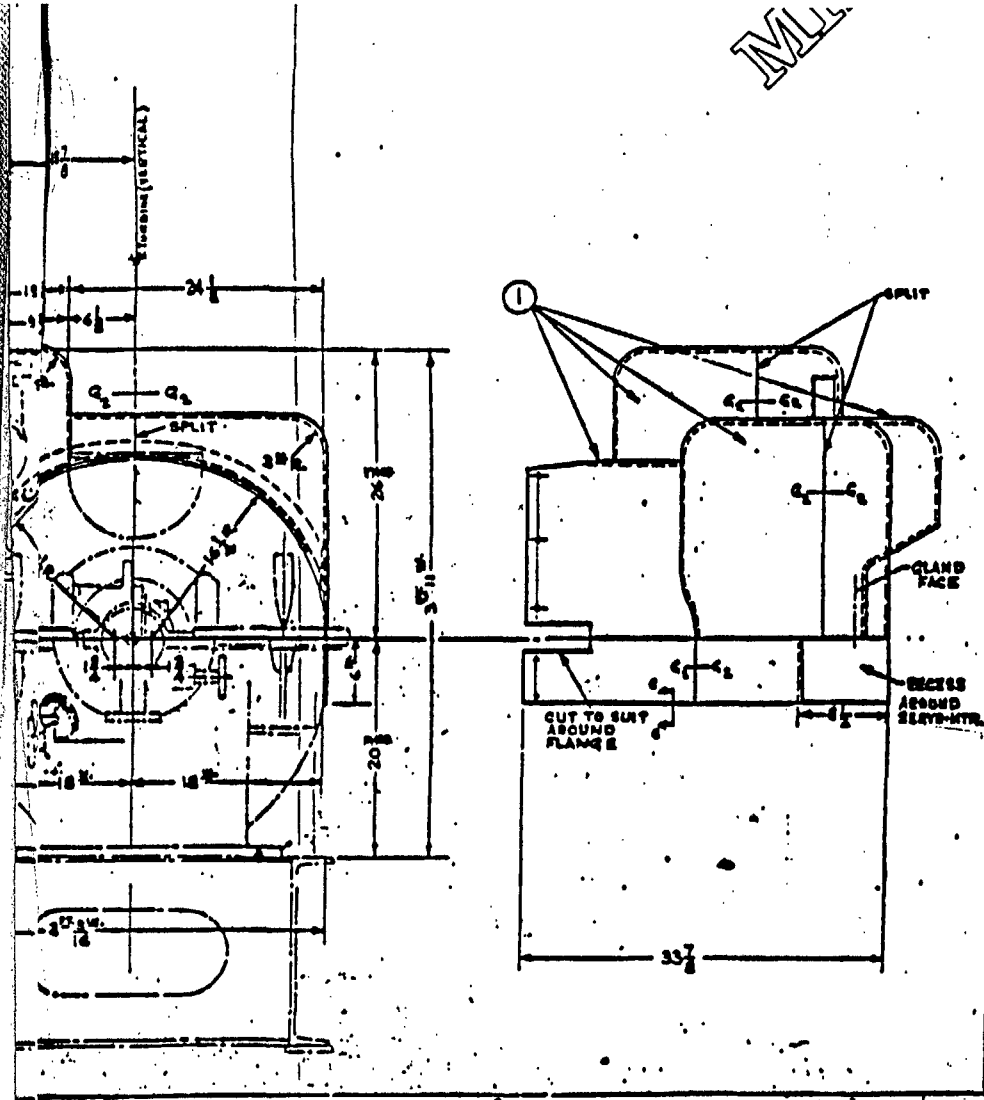

21 22 23 24 25	MA-11	[illegible]	F-23145	[illegible]
6 7 8 9 10	MA-8	[illegible]	C&H-8	439 440 441 442 443
1 2 3 4 5	MA-7	[illegible]	M-400 400-1	490 491 492 493 494
HULL NO.	CONTRACT NO.		PURCHASE ORDER NO.	HULL NO.
U.S. MARITIME ADMINISTRATION		SHIPYARD		

98-J-152

SF003357

PROCESS (RS.596603). BEFORE OR AFTER ANNEALING.

NOTE-3: MAY BE PURCHASED FROM NELSON STUD WELDING, A DIVISION OF MORTON GREGORY CORP LORAIN, OHIO.



NOTE-4: INSULATION TO BE FURNISHED AND APPLIED BY SHIPBUILDER.

NOTE-5: PADS SHOWN ON CYLINDER COVER TO BE INSTALLED PRIOR TO ANNEALING CYLINDER COVER CASTING PER RS.596603. SEE CYLINDER COVER DWG.

NOTE-6: MAY BE PURCHASED FROM KSM PRODUCTS INC OR EQUAL.

G
PT CYLINDER COVER)

WESTINGHOUSE ELECTRIC CORP
MARINE DIVI
SUNNYVALE, CALI

INSULATION ATTACHMENTS

MARINE -
CODE IDENT

DRAWING
302D 3

SCALE NONE | S.O. 55V1081

SF003358

SEE NOTE 4

MISS.

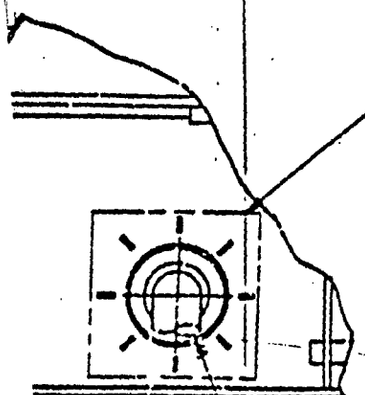

)WARD END
VIEW
(PARTIAL)

SF003359

SEE NOTE 1

SHOP ORDER NO. 3323-2902		
	SIGNATURE	DATE
PREPARED	[signature]	2/3/69
CHECKED	[signature]	6-4-69
DESIGN ENG	[signature]	6/4/69
GOVT APPROVED-		

WESTINGHOUSE ELECTRIC CORPORATION
SUNNYVALE, CALIFORNIA, 94088

TITLE. INSULATION ATTACHMENTS & NAMEPLATES

SIZE	CODE IDENT NO.	DRAWING NO.	REV

C
B
A

C

D

E

12

11

10

SF003360

*44 (.0860) DRILL ⊙10
.33 DP, 2 HOLES
LOCATE FR BRG
DEPTH PLATE
1.00

MISS. - IN RE: ABRA

1993

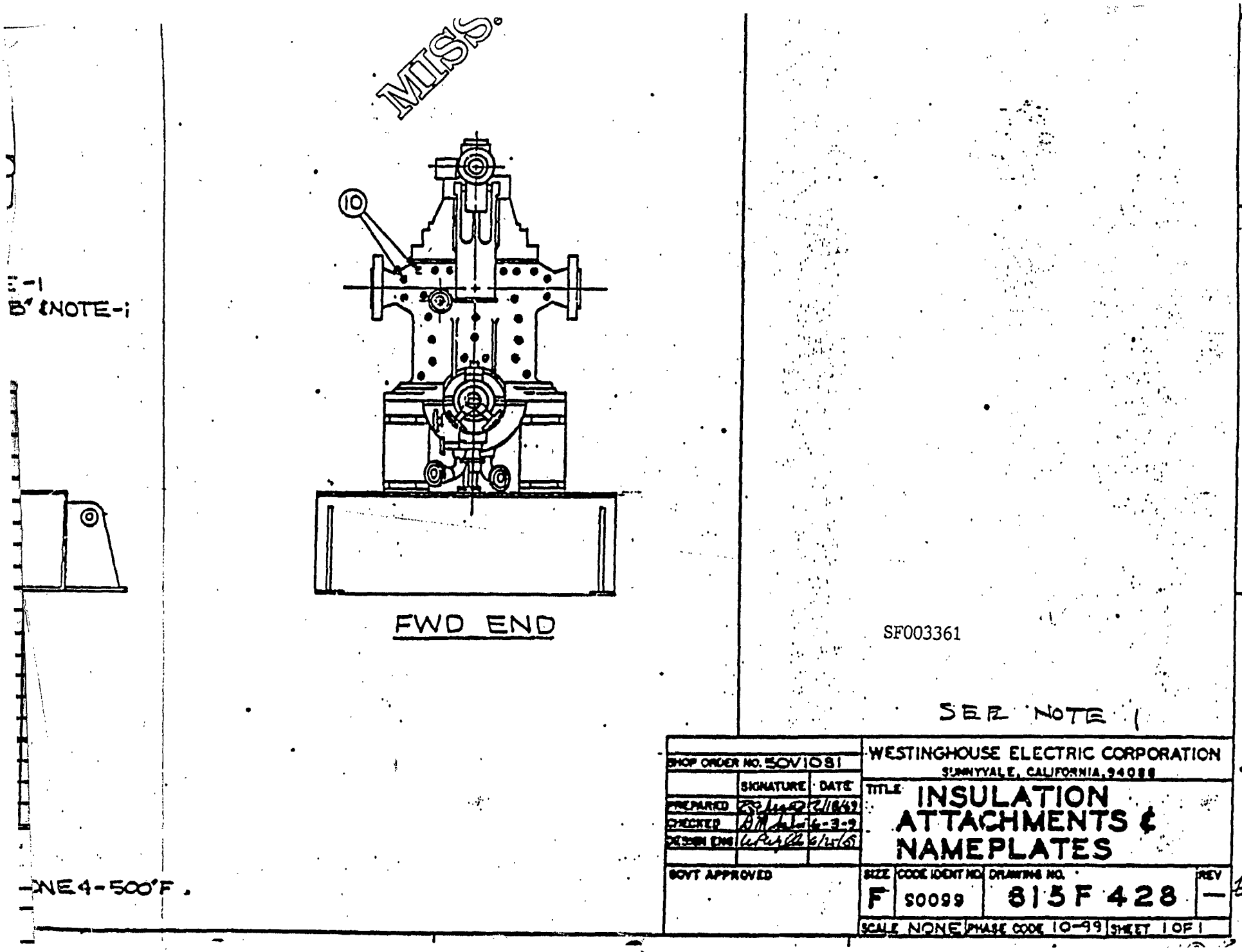

MISS.
10
FWD END
SF003361
SEE NOTE 1
WESTINGHOUSE ELECTRIC CORPORATION
SUNNYVALE, CALIFORNIA, 94088
SHOP ORDER NO. 50V1081
SIGNATURE
DATE
PREPARED
CHECKED
DESIGN ENG
GOVT APPROVED
TITLE
INSULATION ATTACHMENTS & NAMEPLATES
SIZE
F
CODE IDENT NO.
50099
DRAWING NO.
815F428
REV
SCALE NONE
PHASE CODE 10-99
SHEET 1 OF 1
NOTE-1
NE 4-500°F