INDUSTRIAL CHEMICALS CO.

RESEARCH & DEVELOPMENT

Report

REPORT NO.- P-1766 JOB NO.- 43-000-760.22-1016005

PROCESS FOR ENGINEERING DESIGN

FOR

MONOCHLOROBIPHENYL

DATE - July 29, 1974 WRITTEN BY - D. R. Cova

Monsanto

ST. LOUIS, MISSOURI

COMPANY CONFIDENTIAL

MONS 040741

AD442 Rev 1/72

Research and Development Report No. P-1766

PROCESS FOR ENGINEERING DESIGN FOR MONOCHLOROBIPHENYL

Job No. 43-000-760.22-1016005

July 29, 1974

Written by: D. R. Cova

Work done by: D. R. Cova
K. W. Holbert
B. P. Manoff

-COMPANY CONFIDENTIAL-

MONS 040742

Distribution of
Report No. P-1766

1. Technical Reports Library - Permanent Copy
2. Technical Reports Library - Loan Copy
3. Technical Reports Library - Loan Copy
4. Circulate to MICC Director, Technology Planning & Evaluation, Managers, R&D, then to Technical Reports Library - R229
5. W. R. Richard
6. Q. E. Thompson
7. R. H. Munch
8. J. F. Quinn
9. D. R. Cova
10. J. R. Savage - Manufacturing
11. J. E. Maurer/W. H. Duffey - Patent
12. T. L. Gossage/C. Paton - Marketing
13. K. E. Boucher - TSD
14. Gary Johnson - Manufacturing
15. W. C. Engman - TSD
16. A. E. Leisy - Manufacturing
17. D. K. Lynch - WGK PPR

This report contains confidential information which is the property of Monsanto Industrial Chemicals Company and shall be disclosed only to duly authorized persons. The recipient is held accountable for the filing and safe custody of the report which must be returned on demand.

TABLE OF CONTENTS

	Page No.
INTRODUCTION	1
SYNOPSIS OF PROCESS	1
CHEMISTRY OF PROCESS	1
YIELDS AND RAW MATERIAL REQUIREMENTS	2
PROCESS FLOW DIAGRAM	4
MATERIAL BALANCES	5-6
PROCESS IN DETAIL	
I. Steady-State Process	7
II. First Fractionation Batch	10
DISCUSSION OF VARIABLES	12
RAW MATERIAL SPECIFICATIONS	27
ANALYTICAL PROCEDURES	36
PRODUCT SPECIFICATIONS	38
PHYSICAL CONSTANTS DATA	43
SAFETY AND TOXICITY DATA	47
ENVIRONMENTAL PROTECTION	54
APPENDIX	

ABBREVIATIONS

CBP	Chlorobiphenyl
DCBP	Dichlorobiphenyl
MCBP	Monochlorobiphenyl
PCB	Polychlorobiphenyl
o	ortho
m	meta
p	para

INTRODUCTION

Monochlorobiphenyl (MCBP) consists mostly of the isomer, o-chlorobiphenyl. Its only use is as an intermediate for the manufacture of o-phenylphenol. This report provides information for the design of facilities for its manufacture in the Aroclor Department at the W. G. Krummrich Plant.

In the manufacture of MCBP large quantities of Aroclor byproduct are formed. These are converted to Aroclor 1242. The market for Aroclor 1242 is limited. This places a limitation on the amount of byproduct that can be disposed of in this way. At the present time, byproduct corresponding to about 8M lb/yr of MCBP can be disposed of in the Aroclor 1242 business. An increase in MCBP manufacture above 8M lb/yr will require either incineration of excess byproduct or else a change in the process for handling it. Also, plant capacity will be limiting at or near 8M lb/yr.

SYNOPSIS OF THE PROCESS

Biphenyl is chlorinated to Aroclor 1111. This material is then fractionated through a 30-tray column. The fractionation is carried out semi-continuously. Three cuts are taken: a large forecut consisting mostly of biphenyl which is recycled to chlorination; an intermediate fraction (or slop cut) which is recycled to the following fractionation batch; and finally, the product fraction. The still residue (which is large) is straight takeover distilled. This distillate is chlorinated to Aroclor 1142, isomerized over $AlCl_3$, then distilled again, Porocel treated and can then be sold as Aroclor 1242.

CHEMISTRY OF PROCESS

The only reactions carried out are chlorinations of biphenyl or Aroclors to various concentrations of chlorine. In the first reaction, biphenyl is converted to an Aroclor containing an average of 11% chlorine.

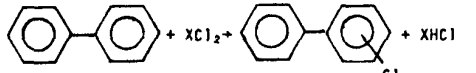

Molecular Weights	Biphenyl	Chlorine	Aroclor 1111*	Hydrogen Chloride
	154.20	70.91	172.65	36.47

* Aroclor 1111 is a mixture of homologs ranging from unconverted biphenyl (40-45%) to small amounts of trichlorobiphenyls. Monochlorobiphenyls are present in 44-48% concentrations and dichlorobiphenyls in 4-7% concentrations. The molecular weight

was calculated from the chlorine concentration and thus represents the mixture.

In the second chlorination, distilled residue (containing about 23.7% chlorine) from monochlorobiphenyl fractionation is chlorinated to Aroclor 1142.

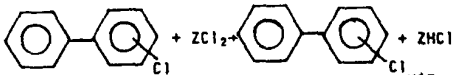

	Aroclor 1124*	Chlorine	Aroclor 1142*	Hydrogen Chloride
Molecular Weights	200.3	70.91	260.5	36.47

* Again, these compositions are mixtures of homologs and the molecular weights were calculated from the chlorine concentrations.

YIELDS AND RAW MATERIAL REQUIREMENTS

A. Yields

Following are percent yields of monochlorobiphenyl based on the theoretical possible yields.

On biphenyl	58.7%
On chlorine	32.8%

Since a saleable product, Aroclor 1242, is produced in large quantities along with the monochlorobiphenyl, total yields were also calculated as a percent of theory. That is, the following yields are for the total of both products taken together in the same proportion as shown in the material balance (100 lbs. of monochlorobiphenyl and 88.0 lbs. of Aroclor 1242).

On biphenyl	96.1%
On chlorine	97.3%

B. Raw Material Requirements

Following are raw material requirements for 100 lbs. of monochlorobiphenyl. It should be kept in mind when considering these quantities that 88.0 lbs. of Aroclor 1242 is produced simultaneously with the 100 lbs. of monochlorobiphenyl.

Raw Materials Required for 100 lbs. of Monochlorobiphenyl

Biphenyl	139.2 lbs.
Chlorine	114.6 lbs.
$FeCl_3$	0.18 lbs.
Lime	1.25 lbs.
$AlCl_3$	0.23 lbs.
Scrubber Liquor*	70.0 lbs.

* It should be stated that scrubber liquor is used in the scrubbing column whenever chlorinations are underway and that it eventually ends up as saleable product (Aroclor 1254).

Since sizeable quantities of Aroclor 1242 will also be produced, raw material requirements for 100 lbs. of this product are given below.

Monochlorobiphenyl residue	81.1 lbs.
Chlorine	49.5 lbs.
$FeCl_3$	0.03 lbs.
Lime	0.51 lbs.
$AlCl_3$	0.26 lbs.

TABLE I

STEADY-STATE PROCESS MATERIAL BALANCE

STREAM / COMPOSITION WT %	1 FRESH BIPHENYL	2 TOTAL BIPHENYL	3 CATALYST SLURRY	4 CHLORINE GAS FOR AROCLOR 1111	5 HCl OFFGAS	6 CONDEN-SATE	7 COOLED OFFGAS	8 TOTAL OFFGAS	9 SCRUBBER LICUOR IN	10 SCRUBBER LICUOR OUT	11 CHLORINE GAS TO SUMP	12 SCRUBBED HCl GAS	13 CRUDE AROCLOR 1111	14 CRUDE FOR LIME SLURRY	15 LIME FOR AROCLOR 1111	16 LIMED CRUDE AROCLOR 1111	17 FRACTION-ATOR CHARGE	18 FRACTION-ATOR CRUDE FEED	19 FRACTION-ATOR TOP CUT FEED
Biphenyl	100.00	97.41	99.25		6.00	76.33	0.81	0.48		0.01			45.45	45.45		45.33	45.33	45.33	31.92
o-CBP		2.54			1.09	15.26	0.03	0.02					28.28	28.28		28.20	28.20	28.20	67.97
m-CBP					0.09	1.28	2. x 10^{-3}	1. x 10^{-3}		0.47		[48 ppm]	3.02	3.02		3.01	3.01	3.01	.03
p-CBP					0.44	6.27	0.01	7. x 10^{-3}					15.45	15.45		15.41	15.41	15.41	.08
2,2'-DCBP					0.03	0.42	7. x 10^{-4}	4. x 10^{-4}					1.49	1.49		1.49	1.49	1.49	
Dichlors*					0.03	0.43	2. x 10^{-3}	1. x 10^{-3}					5.52	5.52		5.51	5.51	5.51	
Trichlors													0.30	0.30		0.30	0.30	0.30	
Tetrachlors													0.28	0.28		0.28	0.28	0.28	
$FeCl_3$		0.05	0.75										0.05	0.05		0.05	0.05	0.05	
Chlorine				100.00							100.00								
HCl					92.31		99.14	99.48				100.00	016	0.16					
Lime															100.00	0.09	0.09	0.09	
$CaCl_2$																0.24	0.24	0.24	
H_2O																0.09	0.09	0.09	
$AlCl_3$																			
Aroclor 1142								0.01				~40 ppm							
Aroclor 1242																			
Aroclor 1016 Residue									100.00	99.52									
Stream Wt., Lbs.	118.1	294.7	21.3	71.0	39.5	2.7	36.8	59.4	70.0	70.4	0.12	59.1	326.2	7.2	0.2	327.0	227.9	99.1	40.3
Temp, °C	100	90	100	Ambient	128	80	80	80	45	45	Ambient	45	150	100	Ambient	150	150	150	80
Pressure, Torr	760	760	760	760	760	760	760	760	760	760	760	760	760	760	760	760	760	760	760
Volume, Gal.	14.6	36.2	2.6	392 ft³	538 ft³	0.3	468 ft³	756 ft³	5.8	5.8	0.7 ft³	632 ft³	39.1	0.9	0.05	39.2	27.3	11.9	4.5

* This excludes 2,2'-Dichlorobiphenyl

MONS 040749

	20 FRACTIONATOR UNIT LOSS	21 FORECUT	22 SLOP CUT	23 MCBP PRODUCT	24 FRACTIONATOR RESIDUE	25 VENT LOSS	26 FINAL RESIDUE	27 DISTILLED RESIDUE	28 $FeCl_3$ CATALYST	29 CHLORINE FOR AROCLOR 1142	30 HCl OFF GAS FROM AROCLOR 1142	31 CRUDE AROCLOR 1142	32 $AlCl_3$ ISOMERIZATION CATALYST	33 ISOMERIZED AROCLOR 1142	34 LIME	35 LIMED AROCLOR 1142	36 AROCLOR 1142 STILL VENT LOSS	37 AROCLOR 1142 RESIDUE	38 AROCLOR 1242	39 TREATED AROCLOR 1242
Biphenyl	2.6	95.13	31.92	.44	.05	0.22		0.05												
o-CBP	0.9	4.87	67.97	84.01	.90	1.53		0.93												
m-CBP			.03	3.66	8.65	10.47		8.91												
p-CBP			.08	11.27	54.87	66.56		56.45												
2,2'-DCBP				.60	5.99	5.53		6.17												
Dichlors*				.02	25.19	15.57		25.98												
Trichlors					1.39	0.11	15.0	0.98												
Tetrachlors					1.27		26.2	0.52												
$FeCl_3$					0.23		7.7		100.00			0.05		0.05		0.005		1.7		
Chlorine										100.00										
HCl											99.98	0.16		0.16						
Lime					0.41		13.7								100.00	0.33		11.1		
$CaCl_2$					1.12		37.4									0.24		8.1		
H_2O	96.3															0.08	94.2			
$AlCl_3$													100.00	0.26		0.05		8.4		
Aroclor 1142											~ 0.02	99.79		99.54		99.05	5.8	70.7		
Aroclor 1242																			100.00	100.00
Aroclor 1016 Residue																				
Stream Wt, lbs	0.27	158.3	40.3	100.0	71.4	0.16	2.1	69.1	0.03	43.6	22.6	90.1	0.23	90.3	0.45	90.8	0.08	2.7	88.0	88.0
Temp, °C	80	80	80	80	270	97	250	97	Ambient	Ambient	80	150	Ambient	250	Ambient	150	97	260	97	65
Pressure, Torr	330	330	330	330	460	40	40	40	760	750	760	760	760	760	760	760	40	40	40	760
Volume, Gal.	-	18.9	4.5	10.8	8.5	-	~ 0.2	7.3	-	240.7	286 ft³	8.4	-	9.0	-	8.4	-	~ 0.3	8.0	7.8

45°C

*This excludes 2,2'-Dichlorobiphenyl

HONS 040750

(Stream 13) be at the correct specific gravity as this determines the composition of the Aroclor to be fractionated:

Stage Number	1	2	3	4
Specific Gravity at 35°C	1.002	1.022	1.039	1.056

A total of 39.5 lbs. of HCl offgas (Stream 5) is given off by the chlorination reaction. This stream contains 7.7 wt % organics, most of which are condensed out when the gas is cooled to 80°C. The condensate, 2.7 lbs. of Stream 6, is collected separately for future conversion to Aroclor 1254. The cooled offgas (Stream 7) is mixed with the offgas from residue chlorination (Stream 30). The total stream is sent to the offgas scrubber where it is contacted with scrubber liquor (distilled residue from the Aroclor 1016 process). Most of the organics in the offgas are removed. It is estimated (on the basis of plant experience) that the scrubbed gas (Stream 12) will contain about 45 ppm total PCB's. Fresh scrubber liquor is fed continuously to the liquor surge tank (70.0 lbs. of Stream 9). 70.4 lbs. of spent liquor is withdrawn continuously from the system to maintain a constant level. This material, Stream 10, is converted to Aroclor 1254.

MDNS 040751

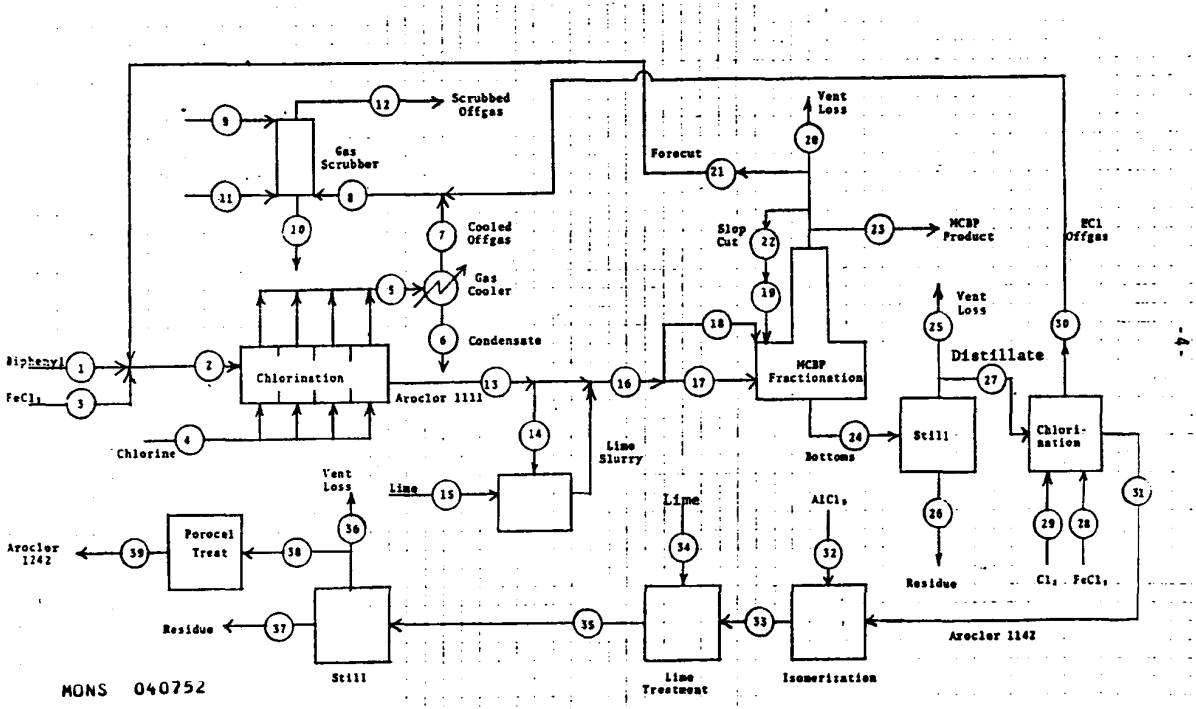

MONS 040752

FIG 1

PROCESS FLOW SHEET

In order to minimize PCB's in the scrubbed gas and to prevent condensation of solid biphenyl from the scrubbed gas onto piping surfaces, the concentrations of biphenyl and of total monochlorobiphenyls and dichlorobiphenyls must be held below 1 wt % of each in the scrubber liquor (i.e., biphenyl <1.0% and total monochlorobiphenyls + dichlorobiphenyls <1.0%). Some additional control can be exerted over this by adding chlorine to the scrubber liquor surge tank or into the scrubber column sump to chlorinate some of the biphenyl absorbed in the liquor. In the material balance enough chlorine (0.12 lbs. in Stream 11) has been added to convert most of the absorbed biphenyl to monochlorobiphenyls.

Crude Aroclor 1111 from the chlorinator (Stream 13) must be treated with lime before fractionating. The purpose of lime treatment is to react out dissolved HCl in the crude Aroclor before it enters the fractionation system. This will prevent corrosion problems in the column. Lime is slurried in Aroclor 1111 (0.8 lbs. in 7.8 lbs. of Aroclor). This slurry is added to the crude Aroclor 1111 as it is pumped into the intermediate storage tank.

B. Aroclor 1111 Fractionation

227.9 lbs. of limed Aroclor 1111 is charged to the stillpot of the 30-tray distillation column. The system pressure is reduced to 330 Torr and the system is brought to reflux. Head and stillpot temperatures will be about 220 and 246°C, respectively. After the system has lined out at total reflux, distillate flow is started forward to the forecut receiver at a reflux ratio of 3/1. At the same time, limed Aroclor 1111 is fed into the stillpot at the same rate as distillate is drawn off. This is continued until 55.0 lbs. of forecut has been collected. The reflux ratio is now increased to 5/1, and distillate flow is continued into the forecut receiver. The feed of limed crude into the stillpot is continued until 99.1 lbs. of crude has been fed. Crude feed is now stopped and slop cut from the previous fractionation batch is started feeding into the stillpot. When 40.3 lbs. of slop cut (Stream 19) has been fed to the stillpot, the feed is cut off and the reflux ratio is increased to 15/1. Distillate flow to the forecut receiver is maintained until the column head temperature shows a rise of 2°C. This signals the end of the forecut and the beginning of the slop cut. 155.3 lbs. of forecut will have been collected and sent back for chlorination to Aroclor 1111. Distillate flow is diverted to the slop cut receiver.

Distillate is taken off at a reflux ratio of 15/1 throughout the entire slop fraction. As the slop cut is taken off, the

column head temperature will rise, indicating the depletion of biphenyl from the system. The head temperature will level out again at about 240°C (indicating pure o-CBP at the column head). This leveling out of temperature is the first indication of the end of the slop cut. The distillate should be sampled at this time and the biphenyl concentration determined (by GLC or by refractive index measurement). Figure 10 or 12 in the appendix can then be used to determine precisely how far the distillation has proceeded. The amount of slop cut yet to be removed can then be readily calculated from these figures. The slop cut is ended when the biphenyl concentration in the distillate has fallen to 2-3%. By the time the slop cut is ended, 40.3 lbs. of this fraction will have been collected (Stream 22). The reflux ratio is now lowered to 8/1 and the distillate flow is diverted to the product tank. Stillpot temperature at this point is 264°C.

The column head temperature will remain at 240°C through most of the product fraction. When the o-CBP has been depleted from the system, the head temperature will begin to rise. This is an indication that the end of the product fraction is near. When the head temperature has risen to 250°C, the distillate is sampled and the crystallizing point is determined. Figure 14 in the appendix is then used to determine precisely how far the distillation has proceeded. How much more distillate to take off can be calculated from this figure. When the crystallizing point of the distillate reaches 53°C, the product fraction is finished. At this point 100 lbs. of product MCBP (Stream 23) will have been collected.

The fractionation system is now shut down and the column is allowed to dump into the stillpot. The residue (71.4 lbs. in Stream 24) is removed from the stillpot and stored prior to distillation.

C. MCBP Residue Distillation

The fractionation residue (Stream 24) is straight takeover distilled at 40 Torr. In a batch distillation the stillpot temperature will range from 190°C at the start to 250°C at the end of distillation. Vapor temperature will rise from 188°C to 222°C. The distillation can also be carried out semi-continuously, in which case the temperature ranges may become smaller. 69.1 lbs. of distillate is produced (Stream 27) and 2.1 lbs. of residue (Stream 26). The residue is stored for future distillation in a Montar still. The distillate is chlorinated to Aroclor 1142.

MONS 040754

D. Chlorination of Distilled Residue

The distilled residue is chorinated batchwise (and not continuously) at 150°C in the presence of 0.05% $FeCl_3$ catalyst

(0.03 lbs. in Stream 28). The distilled residue analyzes at 23.3% chlorine. 43.6 lbs. of chlorine (Stream 29) is sparged into the reaction mass. This will bring the specific gravity at 65°C to within the range, 1.354-1.356. At this point the reaction mass should be sampled and the content of 4,4'-DCBP determined by GLC. Fig. 15 in the appendix shows normal levels of 4,4'-DCBP in the reaction mass versus specific gravity. The 4,4'-DCBP level of the finished reaction mass must not exceed 3.5 area %. If the level is above 3.5 area %, more chlorine can be added to the batch. In no case, however, can the specific gravity at 65°C be allowed to exceed 1.361.

The HCl offgas (Stream 30) is mixed with the cooled offgas from biphenyl chlorination and is passed to the offgas scrubber. The crude Aroclor 1142 (90.1 lbs. in Stream 31) is passed on to the isomerization step.

E. Isomerization of Aroclor 1142

0.23 lbs. of $AlCl_3$ (Stream 32) is added to the crude Aroclor 1142 from chlorination. This gives a level of 0.25% $AlCl_3$ in the reaction mass. The mass is heated to 250°C and is held there for 5 hours. At the end of 4 hours the mass is sampled and the 4,4'-DCBP level determined by GLC. This level should be no higher than 2.6 area %. If this level has not been achieved after 6 hours of reaction, additional $AlCl_3$ catalyst should be added to the reaction mass and it should be held at temperature for another 4 hours. The finished reaction mass is treated with lime before distilling.

F. Aroclor 1142 Distillation

0.45 lbs. of lime (Stream 34) is added to 90.3 lbs. of isomerized Aroclor 1142 (Stream 33). The Aroclor should be well contacted with the lime over a period of at least 2 hours. At the end of this time the material can be straight takeover distilled at 40 Torr. The distillation can be carried out batchwise or semi-continuously. In the laboratory in batchwise distillation the stillpot and vapor temperatures ranged from 225 to 264°C and from 220 to 241°C, respectively. 2.7 lbs. of residue (Stream 37) is produced in this distillation and 88.0 lbs. of distilled Aroclor 1242 (Stream 38). The distillate is passed through a Porocel column at 65°C to produce finished Aroclor 1242 (88.0 lbs. in Stream 39).

II. First Fractionation Batch MONS 040755

The first fractionation batch differs from subsequent batches in that there is no recycle slop cut from a previous batch. This first batch is described in this section, starting from limed Aroclor 1111 and ending with the end of the fractionation batch. The material balance for this batch is given in Table IA.

TABLE IA
MCBP FRACTIONATION - FIRST BATCH

Composition, wt % \ Stream	Stillpot Charge	Stillpot Feed	Forecut	Slop Cut	Product Cut	Bottoms
Biphenyl	44.4	44.4	95.7	35.0	0.48	-
o-Chlorobiphenyl	28.7	28.7	4.8	65.0	81.4	2.3
m-Chlorobiphenyl	3.2	3.2			3.92	9.7
p-Chlorobiphenyl	17.5	17.5			13.3	61.9
2,2'-Dichlorobiphenyl	1.2	1.2			.66	4.6
Other PCB's and Lime	4.7	4.7			-	20.7
Total, lbs.	251.9	144.8	172.2	33.9	100.0	90.6
Temp, °C	150	150	80	80	80	270
Pressure, Torr	760	760	330	330	330	460
Volume, gals.	30.2	17.4	21.0	3.8	10.8	10.8

The process description gives no details of process control since this has been covered in part A, the steady-state process.

251.9 lbs. of limed Aroclor 1111 is charged to the stillpot of the 30-tray fractionator. The system pressure is reduced to 330 Torr and the system is brought to reflux. Head and stillpot temperatures will be 220 and 246°C, respectively, at this time. After the system has lined out at total reflux, distillate flow is started forward to the forecut receiver at a reflux ratio of 3/1. At the same time, limed Aroclor 1111 is fed into the stillpot to maintain a constant level. This is continued until 66.0 lbs. of forecut has been collected. The reflux ratio is then increased to 5/1. Distillate flow to the forecut receiver and feed to the stillpot are maintained. When 144.8 lbs. of crude has been fed to the stillpot, the feed is cut off and the reflux ratio is increased to 15/1. Distillate flow to the forecut receiver is maintained until the column head temperature shows a rise of 2°C. At this point, the distillate flow is diverted to the slop cut receiver. 172.2 lbs. of forecut will have been collected.

As the slop cut is taken off, the head temperature will rise and level out at about 240°C. This indicates that the slop cut is almost complete. After analysis of the distillate has shown that the slop cut is finished (less than 2% biphenyl in the distillate), the distillate flow is diverted to the product receiver and the reflux ratio is reduced to 8/1. 33.9 lbs. of slop cut will have been collected. Stillpot temperature will now have risen to about 267°C.

The column head temperature will remain at 240°C through most of the product fraction and will begin to rise near the end. When the temperature has reached 250°C the distillate should be sampled for crystallizing point measurement. On this first run it would be desirable to place the column on total reflux short of the end of fractionation while a representative sample of the material in the product tank is analyzed by GLC. After analysis, it can be decided how much more distillate should be taken off. When the product fraction is ended (100.0 lbs. of fraction), the fractionator is shut down, and 90.6 lbs. of residue are pumped to residue storage.

DISCUSSION OF VARIABLES

MONS 040757

A. Chlorination of Biphenyl

1. Chlorination Temperature and Catalyst Concentration

Laboratory experiments have shown that a 0.03% ferric chloride charge (based on biphenyl) is entirely adequate for this chlorination. In fact, earlier work by Helmut Merten on the preparation of Aroclor 1242 has shown that

a catalyst concentration of 0.005% is sufficient provided the biphenyl temperature is above 110° when initial chlorination is commenced. For this reason we recommend a minimum chlorination temperature of 120°C and a catalyst concentration of 0.05%.

2. Chlorine Purity

Calculations of off-gas volumes, etc., are based on a feed of pure chlorine. In practice, the chlorine feed may contain air (perhaps 25 volume %). A low chlorine content does not hurt the quality of Aroclor 1111 produced, but the presence of excess inert gas contributes to loss of organics in the off-gas stream.

3. Chlorination Level

The object of producing Aroclor 1111 is ultimately to obtain monochlorobiphenyl with a minimum of di or higher chlorinated biphenyls. In order to hold down formation of the higher chlorobiphenyls, it is necessary to limit the amount of chlorination in the distillation feedstock. Chlorination levels of about 10-12% have been found to be optimum. Chlorination below 10% requires excessive biphenyl recycle. In the following fractionation the forecut size, already large, would be increased still further.

As the chlorine content of the Aroclor is increased over 11%, the rate of formation of polychlorobiphenyls increases rapidly while that of the monochlorobiphenyls is decreasing. This has two detrimental effects. Firstly, the amount of residue from MCBP fractionation is increased. This residue is converted to Aroclor 1242. The market for this product is limited. Any residue beyond that required to fill this market need would, at this point, have to be disposed of by incineration. This is not desirable, so it is best to minimize residue. Secondly, one of the polychlorobiphenyls that would increase rapidly is 2,2'-DCBP. This isomer boils quite closely to p-CBP and is difficult to separate by fractionation. 2,2'-DCBP comprises most of the polychlorobiphenyl found in MCBP. We can only meet the polychlorobiphenyl specification on MCBP because the level of 2,2'-DCBP in Aroclor 1111 is low (about 1.6%). Higher levels would again necessitate larger residues and less MCBP product with, by the way, less p-CBP isomer.

4. Chlorine Gas Distribution

From the point of view of homolog distribution the optimum reactor configuration is a batch chlorination. In batch chlorination monochlorobiphenyls would be maximized while biphenyl and polychlorobiphenyl levels would be minimized.

The next best is a continuous chlorination carried out in a series of stages. The more stages there are, the more closely the final product will approach that found in a batch reactor. Aroclor 1111 will be made in a 4-stage continuous chlorinator. To obtain the best homolog distribution it is essential that the chlorine gas feed be distributed evenly to all 4 stages. Any gross variations from this gas distribution will cause an increase in the undesirable homologs. This will lessen the yield of MCBP, possibly lessen its quality, and increase the size of the residue stream.

5. HCl Solubility in Crude Aroclor

The solubility of HCl in Aroclor is a function of temperature. Figure 9 in the Appendix shows this function. From this it should be possible to reduce dissolved HCl in Aroclor 1111 by raising the temperature in the last chlorination stage. Temperatures above 150°C are not practical, however, because of the high vapor pressure of biphenyl. Any reduction in dissolved HCl is desirable because it would reduce the amount of lime to be added to the crude to neutralize the acid.

6. Dispositon of HCl Offgas

The HCl offgas from the chlorinators is cooled to 80°C. At this temperature it still contains 3.7 wt % biphenyl and about 0.3% chlorobiphenyls. These must be further reduced before the offgas leaves the department. The polychlorobiphenyls must be reduced because of environmental considerations. Biphenyl must be lowered (to 0.006 g biphenyl/Std ft^3 of gas) to prevent its condensation as a solid in piping at ambient temperature. This reduction can best be carried out by passing the offgas into the HCl scrubber now in the department. This scrubber uses distilled residue from the Aroclor 1016 process as scrubbing liquor.

Chlorobiphenyls in the offgas will be condensed out and dissolved in the liquor. Biphenyl will also be dissolved in the liquor. Because of the large amount of biphenyl in the offgas and because of its relatively high vapor pressure, it is best to keep its concentration in the scrubber liquor low. This can be done by chlorinating it up to chlorobiphenyl.

Chlorination of biphenyl-rich scrubber liquor in the scrubber liquor hold tank was simulated in the laboratory. Scrubber liquor from the department (in use in the scrubber for about one week) was spiked with biphenyl. Chlorine gas was then slowly sparged into the stirred mixture at 45°C. Chromatographic analysis of samples of the reaction mass showed a disappearance of biphenyl as the chlorine was

added. Chlorine was added at a rate of 3g chlorine/100g of reaction mass/hr. Figures 7 and 8 show biphenyl concentration as a function of chlorine added and as a function of time. At the 1% level, it was calculated that 1.9g of biphenyl reacted for each gram of chlorine added. This means that 87% of the chlorine added at this biphenyl level reacted to form monochlorobiphenyl. The partial pressure of biphenyl above scrubber liquor containing 1% or less of biphenyl should give a scrubbed offgas containing a level of biphenyl well below the dewpoint at the ambient temperature.

In order to keep the levels of chlorobiphenyls low in the scrubbed gas, the levels of monochlorobiphenyls and dichlorobiphenyls in the scrubber liquor must be kept below 1% for the total of these components. Since biphenyl is chlorinated to form these compounds it may be desirable (if scrubber liquor availability becomes tight) to chlorinate only part of the biphenyl absorbed, just enough to keep its level below 1%.

B. Monochlorobiphenyl Fractionation

1. Fractionation Requirements

Experiments in the laboratory were designed to simulate fractionation in the 30-tray column in the Aroclor Department. The same number of trays was used, and the column holdup-to-charge ratio was approximately the same. These two variables were not changed in our experiments. It can be readily stated, however, that a decrease in number of trays or an increase in column holdup would reduce the separating efficiency of the system. This would be undesirable.

The reflux ratio program was optimized to some extent. Further optimization may be possible in the plant. For the present the stated program should be followed. Lower reflux ratios should not be used. Higher reflux ratios should give no problem (except for capacity reduction) except possibly in the tail end of the fractionation where a high reflux ratio may cause too high a concentration in the distillate of m-CBP. The meta isomer is undesirable in MCBP and is slightly lower boiling than p-CBP which can be tolerated (up to a point) in the product.

2. Crude Feed/Charge Ratio

This ratio is based on a crude Aroclor 1111 containing 42-46% biphenyl and a slop fraction of 40.3 lbs. The ratio was set such that during the time the column was being fed, distillate could be taken off at reflux ratios no

higher than 5/1. A higher feed/charge ratio would cause biphenyl to be depleted from the system while the stillpot was being fed. To prevent losses of o-CBP in the forefraction it would be necessary to place the column at a higher reflux ratio. This would reduce column capacity. Crude containing lower biphenyl levels or a larger than normal slop fraction would have the same effect, i.e., depletion of biphenyl during the feeding stage. An increase in the column head temperature would indicate biphenyl depletion. This should be countered by increasing the reflux ratio. If this becomes a persistent problem, the feed/charge ratio should be lowered. A lower ratio should only cause a lower capacity unless the change is quite large whereupon there may be detrimental effect on product quality and yield.

3. Column Pressure

In the laboratory column head pressure was set at 430 Torr. This gave a stillpot pressure of about 460 Torr which is the stillpot pressure expected in the plant when the column head is set at 330 Torr. 330 Torr was the head pressure used in the plant in making MCS-1109 (an impure monochlorobiphenyl) and should be adequate here. Except for the effect on column loading and tray dynamics, small changes in this pressure should have no effect on the process.

4. Control of Fractionation

There are six points in the fractionation cycle at which some control action must be taken. The following paragraphs take each of these points in sequence and discusses them at length. The discussion starts with the column already at total reflux.

4-1) Start forward

The column is operated at total reflux until all the column temperatures have lined out. This will allow the initial column concentration gradients to be established. When this state has been achieved, distillate flow is cut forward to the forefraction receiver at a reflux ratio of 3/1. At the same time limed Aroclor 1111 is fed to the stillpot to maintain a constant liquid level.

4-2) When 55.0 lbs. of forefraction has been collected the reflux ratio is increased to 5/1. Distillate flow to the forecut receiver and feed to the stillpot is maintained. If the column head temperature should begin to rise (2°C above the normal level) before this point is reached, the reflux ratio should be increased to 5/1 immediately. If this becomes a common occurrence the reflux ratio should be set to increase before the rise in head temperature is

expected. This will reduce the loss of o-CBP to the forecut.

4-3) End of crude feed

When 99.1 lbs. of forecut has been collected, the feed of limed crude is stopped and the slop fraction from the previous fractionation batch is fed to the stillpot on level control.

4-4) End of all feed

When all of the slop fraction (40.3 lbs.) has been fed to the stillpot, feed is stopped and the reflux ratio is increased to 15/1. Distillate flow is maintained to the forecut receiver. If the column head temperature consistently shows an increase of more than 3 or 4°C before this point is reach, it would be desirable to reduce the amount of limed crude fed to the stillpot.

4-5) End of the forefraction

The end of the forecut and start of the slop cut is signaled by an increase of 2°C in the column head temperature. At this point, distillate flow is diverted to the slop cut receiver. As an indication of the sensitivity of this control technique, if the cut is made at a 4°C increase instead of 2°C, the size of the slop fraction will be reduced by about 4%. This would lower the size of the product fraction in the next fractionation batch by only about 0.5%.

It should be noted that if head temperature shows an increase before the reflux ratio is increased to 15/1 (point 4-4), it will most likely show a decrease shortly after the reflux is increased. This will then be followed by the increase signalling the end of the forecut.

4-6) Start of the product fraction

When the head temperature begins to level off again the start of the main fraction is near. Head temperature is not sensitive enough to signal the exact cut point. Other means must be used. The most desirable way in which to cut into the product receiver is such that the biphenyl concentration of the entire product fraction will be less than 0.6%. Laboratory studies show that this cut point will occur when the biphenyl concentration in the instantaneous distillate is between 2 and 3%. Probably the best way to determine this cut point is to first determine it approximately either from the leveling off of the head temperature or from the amount of slop fraction collected.

Then at this approximate cut point (or slightly before) a sample of instantaneous distillate is obtained and the concentration of biphenyl in this sample is determined. Fig. 10 in the appendix gives a plot of biphenyl concentration in instantaneous distillate as a function of total charge distilled (feed plus original charge). From the concentration of biphenyl in the distillate and using Fig. 10 one can determine how near to the exact cut point the distillation has proceeded. One can then calculate how much more distillate must be taken off before cutting into the product fraction. Figure 10 was determined in the laboratory and should provide a good guide for the first few fractionations. A similar curve using plant data should be developed as soon as possible to provide a more exact guide.

The concentration of biphenyl in the distillate can be determined by GLC. This method unfortunately is not instantaneous but it is the method of choice for the first few batches. Another method which can be used is measurement of the refractive index of the distillate sample. Fig. 11 in the appendix relates biphenyl concentration to refractive index. This can be used in conjunction with Fig. 10 to determine the cut point, or Fig. 12 which plots the variation of refractive index with percent of the total charge distilled can be used directly.

At the same time as the distillate is cut into the product receiver the reflux ratio is lowered to 8/1.

4-7) End of the product fraction

The column head temperature will be constant through the first part of the product fraction. It will then begin to rise as the o-CBP is depleted from the system. This is the first signal of the approach of the end of the product fraction. The head temperature is not sufficiently sensitive to be used as the control point. The crystallizing point of the distillate appears to be best for control. Fig. 13 in the appendix plots crystallizing point versus concentration of p-CBP. Fig. 14 plots crystallizing point versus percent of total charge distilled. It is thought that when the head temperature has risen 10°C above the o-CBP boiling point plateau, a distillate sample is obtained, and its crystallizing point is determined. From this crystallizing point we can place exactly where we are on Fig. 14 and determine from this curve the volume of distillate yet to be taken off before ending the product fraction and terminating the fractionation.

The fractionation must be terminated in such fashion that the product specification on m-CBP and PCB contents are met. That is, m-CBP content must be less than 4.0% and PCB content less than 1.0% in the product fraction. Fig. 14 was

developed for a laboratory fractionation. It is essential that such a curve be developed from plant data. This should be done during the first few batches. GLC's of representative samples of the product already collected can be used to great advantage here as well as GLC's of instantaneous distillate samples. In these first few batches the column can be placed on total reflux while awaiting analytical results.

5. Effect of Variations in Charge Composition

Changes in the degree of chlorination of the Aroclor 1111 will cause changes in the fractionation material balances. If the variations are large enough, this could cause the product to go out of specification as well as affect the yield and capacity of the plant. It is highly desirable that variations in Aroclor 1111 composition be minimized.

6. Lime Treatment of Crude

The purpose of lime treatment is to react out dissolved HCl in the Aroclor before it is fed into the distillation system. The amount of lime given in the process material balance is based on plant experience at a time when air blowing of crude had been discontinued.

It is essential that the treated Aroclor entering the distillation system be checked for the absence of HCl. An analytical method is presented in the appendix. Analysis of the crude entering the lime treatment will help ensure that an adequate amount of lime is being fed to the process. If analysis indicates that higher than normal concentrations of HCl are present, the lime feed rate should be increased.

Mixing in lime treatment must be sufficient to keep the lime suspended and to ensure adequate contacting between lime and crude Aroclors.

7. Slurrying of Lime

Lime is fed into the Aroclor 1111 stream as a concentrated slurry (10% by weight of lime) in Aroclor 1111. This Aroclor has a lower flash point (121°C) than Aroclor 1142 and so precautions such as cooling must be taken before charging the lime. Aroclor 1111 is the material of choice for slurry making for two reasons. Firstly, the use of higher Aroclors as Aroclor 1142 will cause an increased residue from MCBP fractionation. Secondly, this will cause problems further down the line when MCBP residue is converted to Aroclor 1242. The presence of these higher Aroclors in the residue will cause the formation of an Aroclor 1242 product with too high a level of 4,4'-DCBP.

8. Crystallizing Point of Distillate

The crystallizing point of distillate was found to range from 70°C at the start of distillation when almost pure biphenyl was coming over, down to near room temperature when the distillate was high in o-chlorobiphenyl concentration, and up again to 55°C towards the end of fractionation. Distillate lines and receivers will have to be heated to prevent solidification.

9. Corrosion

The material of construction of the distillation column is stainless steel. Stainless steel is prone to stress corrosion cracking in the presence of inorganic chlorides. For this reason it is essential that crude entering the distillation system be free of HCl. HCl is removed from the crude by treating with hydrated lime to remove the residual HCl chemically.

It should be mentioned at this point that the stillpot is constructed of steel. Steel should be impervious to the calcium chloride formed in the lime treatment step.

10. Product Storage

Product in storage should be kept above the freezing point of o-CBP which is 32.4°C. This will prevent the formation of solids. In the laboratory (at about 20°C) some samples of MCBP turned mostly solid after several days of sitting.

C. Chlorination of MCBP Residue to Aroclor 1142

1. Concentration of the 4,4'-DCBP Isomer

4,4'-DCBP has a high melting point (148°C). For this reason only a small amount can be tolerated in Aroclor 1242. Otherwise this compound may precipitate out of the Aroclor at low temperatures. Fig. 16 in the appendix plots the solubility in Aroclor 1016 (essentially equivalent to Aroclor 1242) of 4,4'-DCBP at various temperatures. Aroclor 1242 made by chlorination of biphenyl contains 2.5 area % 4,4'-DCBP. It is essential that Aroclor 1242 made by chlorination of MCBP residue contain no more than this level of 4,4'-DCBP.

MCBP residue contains about 56% p-CBP. This isomer is a precursor to 4,4'-DCBP. As the residue is chlorinated, the level of 4,4'-DCBP rises from about 4 area % to a maximum of 17-18 area %, then begins to fall as chlorination is continued. When the chlorination level has reached that of Aroclor 1142, the reaction mass contains about 3.2 area % of 4,4'-DCBP (as compared to 2.5 area % in normal

Aroclor 1142 -- see Fig. 15 in the appendix). This level is then further reduced by isomerization over $AlCl_3$.

The levels of 4,4'-DCBP given in Fig. 15 represent levels which we believe can be achieved in batch chlorination in Aroclor Department equipment. We know of various conditions that can cause higher levels of 4,4'-DCBP to be formed. These are discussed below.

a. It is essential that the chlorination be carried out batchwise and not in the continuous equipment. Continuous chlorination would give Aroclor 1242 with a wider spread in homologs and, consequently, a higher level of 4,4'-DCBP.

b. Chlorine gas bubble size will have an effect. Very small bubbles (as formed through a frit) will cause a wider homolog spread and higher levels of 4,4'-DCBP. Fortunately, the gas spargers in the Department will give larger rather than smaller bubbles, so this should be no problem in the plant.

c. Higher catalyst levels (0.5% $FeCl_3$ compared to 0.05% normal level) and higher reaction temperatures (250°C compared to 150°C normal) will cause higher levels of 4,4'-DCBP in the finished chlorination mass.

d. The most serious problem (in that it will probably occur in the first batch of a MCBP run) is contamination of the Aroclor 1111 with more highly chlorinated Aroclor, as Aroclor 1142. This contamination will be concentrated in the MCBP residue. The effect of its presence will be to give a MCBP residue with a higher than normal degree of chlorination. This means that less chlorine will be added to bring the residue to Aroclor 1142. The effect on the 4,4'-DCBP concentration will be as though the residue were under chlorinated. The level of 4,4'-DCBP in the Aroclor 1142 will be higher than normal. As an example, Aroclor 1111 made in the Aroclor Department batch chlorinators was contaminated with about 0.5% Aroclor 1154. The Aroclor 1142 made from MCBP residue from this crude contained about 4.0 area % 4,4'-DCBP. If this becomes a problem in the plant, what can be done is to overchlorinate slightly to bring the 4,4'-DCBP down to normal levels. This overchlorination however must be such as not to exceed a specific gravity at 65°C of 1.361. Otherwise the finished Aroclor 1242 will be out of specification on pour point and viscosity. It is absolutely essential that contamination with Aroclor 1142 be minimized as much as possible to prevent this problem occurring.

D. Isomerization of Aroclor 1142

1. $AlCl_3$ Catalyst Level

The process calls for a level of 0.25% $AlCl_3$. Higher levels than this may cause corrosion of the steel reaction vessel. Lower levels may give no isomerization or insufficient isomerization. If, on isolated batches, isomerization does not take place, more catalyst should be added.

2. Reaction Temperature

Temperatures above 250°C may cause tar formation. Lower temperatures may not give isomerization. Temperature seemed to have little effect on corrosion of steel.

3. Moisture

It is essential that the catalyst and reaction mass be protected from moisture. $AlCl_3$ will react with water, forming HCl. The isomerization reaction will not take place if moisture is present or if the materials have been exposed to moisture.

4. Reaction Time

The isomerization should be essentially complete in 4 hours. We recommend that the batch be sampled and analyzed for level of 4,4'-DCBP after 4 hours. If the level is 2.6 area % or less, the reaction can be terminated.

5. Corrosion

A 30 hours test of steel showed uniform corrosion at a rate of 4 mils/year. We recommend that corrosion coupons be placed in the plant isomerization reactor to follow corrosion over a more extended time period.

E. Distillation of Isomerized Aroclor 1242

1. Lime Treatment

The crude isomerized Aroclor 1142 should be contacted with 0.5% lime for 2 hours before being distilled. This will ensure that the $AlCl_3$ catalyst has been killed. Otherwise colored distillate may be obtained, and it may be contaminated with $AlCl_3$ which has sublimed over.

2. Distillation Conditions

The distillation was carried out batchwise in the laboratory at a pressure of 40 Torr. Suitable product was obtained

with up to 97.0% of the charge being distilled over. Once the crude has been suitably treated with lime there should be no difficulty in distilling semi-continuously (i.e., with crude feed to the stillpot).

F. Miscellaneous

1. Changeover from Aroclor 1016 to MCBP

The only difficulty seen here is the effect of contamination of MCBP streams with Aroclor 1142, causing higher than normal levels of 4,4'-DCBP in Aroclor 1242 made from MCBP residue (see the discussion under part C-1 of this section of the report). It is essential that this contamination be held down to a minimum. Plant experience will give us further guidance.

2. Changeover from MCBP to Aroclor 1016

This problem has already been faced in the Department when MCS-1109 was produced there. MCS-1109 was a form of MCBP. What was learned in that changeover can equally well be applied here.

3. Critical Process Variables

In the following table are listed those process variables, their proper values and allowable tolerances which are critical to satisfactory operation of the process. The selection of these variables for inclusion in the table should not be taken to mean that all the other process variables are of no consequence. It is only that these are of special importance.

TABLE II

ALLOWABLE VARIATIONS IN CRITICAL PROCESS VARIABLES

Variable	Value	Allowable Variation	Effect
CHLORINATION TO AROCLOR 1111			
Specific gravity of Aroclor 1111	1.056 at 85°C	± .001	Too much variation here will upset the fractionation material balance, reduce product yield, and possibly cause out-of-spec product.
Chlorine split to each stage	17.75 lbs/hr	± 0.9 lb/hr	If too much chlorination is performed in any one stage, the homolog distribution will be widened. Unconverted biphenyl and PCB levels will increase and product yield will decrease.
NCBP FRACTIONATION			
Lime treatment	--	No free HCl Excess lime	Inadequate lime treatment will allow free HCl to enter the column. This will cause stress corrosion cracking.
Column head pressure	330 Torr	± 5 Torr	Larger variations may cause the column to flood or dump.
Stillpot Level Control	~20,000 gal.	± 100 gal.	Increases in level may cause excessive entrainment into the column. Lowered levels will cause losses of o-CBP to the forecut.
Cumulative distillate flow	-	± 100 gal.	Cumulative distillate measurements are used in the forecut to determine points of changing reflux ratio and end of crude and slop cut feeds to the stillpot. Late changes will cause loss of o-CBP to the forecut.

MONS 040769

TABLE II (cont'd.)

Variable	Value	Allowable Variation	Effect
Head temperature at end of forecut	~222°C	± 2°C	This temperature rise signals the end of the forecut. A late change will cause loss of o-CBP to the forecut. An early change will cause the slop cut to be large and high in biphenyl.
Refractive index of distillate at start of product fraction	~1.6088 at 20°C	± 0.0002	This signals the start of the main fraction. An early change here would cause the product to be out of specification on biphenyl content. A late change will decrease the size of the product fraction.
Crystallizing point of distillate at end of product fraction	53°C	± 0.5°C	This signals the end of the main fraction. A late change here will cause the product to be out of specification on m-CBP and possibly also on PCB's. An early change will decrease the size of the product fraction.
CHLORINATION TO AROCLOR 1142			
Specific gravity of reaction mass	1.355 at 65°C	±0.0001	Variation outside this range will cause the Aroclor 1242 product to be out of specification.
4,4'-DCBP content of finished raction mass	3.1 area %	± 0.3 area %	Higher than normal levels of 4,4'-DCBP will most likely have been caused by contamination with highly chlorinated biphenyls. If this is the case, the 4,4'-DCBP level can be lowered by slight overchlorination, not over a specific gravity of 1.361 at 65°C.
ISOMERIZATION			
Reaction temperature	250°C	± 10°C	Higher temperatures may cause tar formation. Lower temperatures may give insufficient isomerization.
Level of 4,4'-DCBP in finished reaction mass	2.5 area %	$\leq$ 2.6 area %	Higher levels of 4,4'-DCBP may cause problems of solids formation at low temperatures during consumer use of the product.

MONS 040770

Table II - Continued

Variables	Value	Allowable Variation	Effect
Aroclor 1242 DISTILLATION			
Color of distillate	15 APHA	< 20 APHA	A high color will mean insufficient lime treatment of the Aroclor 1142 crude or else entrainment of stillpot liquid into the vapor.

MONS 040171

RAW MATERIAL SPECIFICATIONS

Monsanto
ORGANIC CHEMICALS DIVISION

RAW MATERIAL SPECIFICATION

MATERIAL CODE	MATERIAL
82601	DIPHENYL (BIPHENYL)
PLANT	**USING DEPTS.**
WGK	246
DATE EFFECTIVE	**SUPPLIER**
10/23/70	Anniston Plant

APPROVALS

PRODUCTION	RESEARCH
A. E. Leisy	W. R. Richard
PROCUREMENT	**QUALITY CONTROL (Chief Chemist)**
J. Leyerle	R. Blowers

GENERAL DESCRIPTION

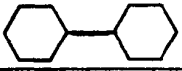

CHEMICAL FORMULA

mol wt. 154.20

SUPERSEDES SPEC'S OF	SAMPLE FOR ANALYSIS	ISSUED BY
2/6/69	2 x 16 oz. W.M. Bottles	S. Shaulter/G. Stites

CHARACTERISTIC	LIMITS	METHOD
UNRESTRICTED INFORMATION		
(R) Appearance and Color	Light Yellow Cryst. Solid	10,252
(R) Crystallizing Point	68.7°C., min.	10,298
(R) H_2O	250 ppm max.	13,155
GENERAL INFORMATION		
Distillation Range:		
First Drop to	2.5°C., max.	10,299
Dry Point	Must include 255°C. within range	

This specification is the property of Monsanto Company and is for internal use only.

Monsanto
ORGANIC CHEMICALS DIVISION

RAW MATERIAL
SPECIFICATION

MATERIAL CODE	MATERIAL
38800	Lime, Hydrated
PLANT	USING DEPTS.
W.G.K.	287, 750, 246
DATE EFFECTIVE	SUPPLIER
4/7/70	Mississippi Lime Co.

APPROVALS

PRODUCTION	RESEARCH
A. E. Leisy T. W. Dalton	W. R. Richard
PROCUREMENT	QUALITY CONTROL (Chief Chemist)
J. Leverle	R. Blowers

GENERAL DESCRIPTION

CHEMICAL FORMULA

$Ca(OH)_2$

SUPERSEDES SPECS OF	SAMPLE FOR ANALYSIS	ISSUED BY
8/13/69	1 x 16 oz. W.M. Bottle	

CHARACTERISTIC	LIMITS	METHOD
Appearance	Fine white or slightly gray powder, free from lumps or gritty material.	10,188
Assay ($Ca(OH)_2$)	92.00%, min.	10,191
Carbonates as ($CaCO_3$)	3.00%, max.	10,193
Magnesium	0.50%, max.	10,192
Sulfates (as SO_3)	0.30%, max.	10,189

Supplier's certificate of analysis to be sent on day of shipment to:

Chief Chemist, Monsanto, Sauget, Illinois

MONS 040774

(R) Routine Analysis, All others Analyzed by request only.

Monsanto
ORGANIC CHEMICALS DIVISION
W. G. Krummrich Plant
RAW MATERIAL
SPECIFICATION

MATERIAL CODE	MATERIAL
33500	Ferric Chloride Anhydride
PLANT: WGK	USING DEPTS.: 233
DATE EFFECTIVE: Jan. 31, 1969	SUPPLIER: McKesson & Robbins

APPROVALS

PRODUCTION	RESEARCH
A. E. Leisy	W. R. Richard
PROCUREMENT: J. Leyerle	QUALITY CONTROL (Chief Chemist): R. Blowers T. Bell

GENERAL DESCRIPTION

CHEMICAL FORMULA

$FeCl_3$

mol wt. 162.21

SUPERSEDES SPECS OF	SAMPLE FOR ANALYSIS	ISSUED BY
1/7/66	1 x 8 oz. W.M. Bottle	Higgerson/Stites

UNRESTRICTED INFORMATION

CHARACTERISTIC	LIMITS	METHOD
		J.F.O.
Appearance	Black powder or Granules	16-A
Assay	97.0%, min.	22-570
Sulfates	0.05%, max.	120-570
Ferrous Salts	Trace, max.	S-570-1
Solubility:		112-B
10:10 of Water	Complete to slightly turbid, max.	
10:10 of Formula 30 Alcohol	Complete to slightly turbid, max.	

IN 99 **MONSANTO CHEMICAL COMPANY**

INORGANIC CHEMICALS DIVISION

RAW MATERIAL SPECIFICATION

RAW MATERIAL: Chlorine

FOR USE IN: WGK

MATERIAL NO.: 81059 Internal, 18850 External

GRADE: Liquid

DATE EFFECTIVE	ISSUE NO.	SUPERSEDES
12/7/67	103	7/11/66

SUPPLIERS

Monsanto - WGKrummrich Plant

Pittsburgh Plate Glass Diamond Alkali

APPROVALS

PRODUCTION (Plant Manager): O. D. Dreasel	RESEARCH (Asst. Director): E. Perry, Jr.
PROCUREMENT (Procurement Manager): R. F. Neunuebel	QUALITY CONTROL (Chief Chemist): W. J. Gresham
AUTHORIZED (Quality Control Director): J. S. Metcalf	

GENERAL DESCRIPTION

A clear, heavy liquid, amber to greenish yellow in color. For use in the manufacture of ACL products.

CHARACTERISTICS	LIMITS	PREFERRED	METHOD NO.
Appearance	A clear amber to greenish-yellow heavy liquid		10,748
Assay - Cl_2	99.5% Min.		----
Iron as $FeCl_3.6\ H_2O$	0.005%, max.		10,688
as Fe	10 ppm max.		
Non-Volatile Matter.	40 ppm Max.		10,660
Moisture, H_2O	40 ppm, max.		12,793

Monsanto
ORGANIC CHEMICALS DIVISION
W. G. Krummrich Plant
RAW MATERIAL
SPECIFICATION

MATERIAL CODE	MATERIAL
81059	Chlorine
PLANT	USING DEPTS.
W.G.K.	236, 237
DATE EFFECTIVE	SUPPLIER
2/8/72	*

APPROVALS

PRODUCTION	RESEARCH
T. W. Dalton	D. R. Dill
PROCUREMENT	QUALITY CONTROL (Chief Chemist)
	R. M. Blowers

GENERAL DESCRIPTION

CHEMICAL FORMULA

Cl_2

SUPERSEDES SPECS OF	SAMPLE FOR ANALYSIS	ISSUED BY
NEW		R.Sorrell/S.Shaulter

CHARACTERISTIC	LIMITS	METHOD
Color	Amber to Greenish Yellow	10,748
Chlorine	95%, Min.	
Moisture (H_2O)	75 ppm, Max.	12,793
Sulfate	10 ppm, Max.	
Carbon Tetrachloride	500 ppm, Max.	

* No current vendors specification identified by Research.

Supplier's certificate of analysis to be sent on day of shipment to:
Chief Chemist, Monsanto., Sauget, Illinois 62201.

MONS 040777

(R) Routine Analysis, All others Analyzed by request only.

MONSANTO INDUSTRIAL CHEMICALS COMPANY
DELAWARE RIVER PLANT
TENTATIVE RAW MATERIAL SPECIFICATION

MATERIAL CODE: 11560
USED IN: Santosol 100
PROPOSED BY: J. C. Wygant

DISTRIBUTION:
W. T. Gregory -1- Delaware River
J. Quinn -1- Delaware River
J. B. Willmore -4- Delaware River
P. R. Parker -1- Delaware River
J. J. Connolly -1- Delaware River
L. J. Ewing -1- Delaware River
Q. E. Thompson -1- GO/T3E
J. F. Herber -1- GO/T3G
J. C. Wygant -1- GO/T3E
Standards Dept. -4- JFQ

NAME: ALUMINUM CHLORIDE ANHYDROUS ~~11560~~

CHEMICAL FORMULA: $AlCl_3$

MOL. WT. 133.34

DATE PROPOSED: 1/25/73
EFFECTIVE UNTIL: 1/21/74

SUPPLIER/S: STAUFFER CHEMICAL COMPANY
SAMPLE FOR ANALYSIS: *4-oz. WM Glass Stoppered Bottles

NOTE: ALL SAMPLES PROCESSED BY THIS TENTATIVE SPECIFICATION WILL REQUIRE DISPOSITION OF THE AUTHORIZED RELEASING AGENT.

TESTS	UNRESTRICTED PURCHASE LIMITS	PROCEDURES D.R.	PROCEDURES J.F.Q.
On each lot			
Appearance	Grayish to light yellow crystalline powder	13-354	16-A
Identity tests:		------	62-11560
Aluminum	Positive		
Chlorine	Positive		
Iron	0.05% maximum	13-356	70-11560
Upon request			
Aluminum chloride ($AlCl_3$)	98.5% minimum	13-358	22-11560
Aluminum, free	0.01% maximum	------	77-11560
Sublimables	98.5% minimum	------	-------
Water insolubles	0.12% maximum	13-359	66-11560

Releasing information

1. All shipments must comply with these specifications. Monsanto, at its option, may elect to accept material not meeting specifications provided notification is given by the vendor before shipment is made.
2. Shipper's analysis, covering the above specifications and any other routinely determined properties, will be mailed to the Chief Chemist, Delaware River Plant, the same day shipment is made.
*3. The Manufacturing Department will sample and submit samples from 4 or 5 containers for analysis.

The specification shown here for $AlCl_3$ is for the actual material used in the laboratory work. Suppliers other than Stauffer Chemical Company can certainly be considered, but their $AlCl_3$ should be checked out in laboratory studies to make certain that it is suitable for this process.

Monsanto
ORGANIC CHEMICALS DIVISION

RAW MATERIAL SPECIFICATION

MATERIAL CODE	MATERIAL
~~43099~~ 43101	Nitrogen Gas
PLANT	USING DEPTS.
WGK	See Below (3)
DATE EFFECTIVE	SUPPLIER
3/29/68	Air Reduction Sales Co.

APPROVALS

PRODUCTION J. W. M. T. W. D. O. D. D. E. D. M. J. M. C.	RESEARCH R. H. Mills ODeG. E. L. M. J. A. S.
PROCUREMENT H. Langer	QUALITY CONTROL (Chief Chemist) W. J. Gresham

GENERAL DESCRIPTION — CHEMICAL FORMULA

Grade - O. P. Special Nitrogen

SUPERSEDES SPECS OF	SAMPLE FOR ANALYSIS	ISSUED BY
2/18/65	----	L. E. Hornback

CHARACTERISTIC	LIMITS	METHOD
Assay (1)	99.9%, min.	(2)
Oxygen	0.1%, max.	
Hydrogen	0%	
Dew Point	-76°F.	

	Typical Analysis
Nitrogen	99.78%
Argon	0.12%
Oxygen	0.1%
Carbon Dioxide	.00005%
Acetylene	.00005%

(1) Nitrogen plus inert rare gases.
(2) Any analyses to be obtained from supplier on request.
(3) 313, 244, 246, 247, A-255, A-256, 259, 267, 270, B-270 & 281.

MONS 040780

(R) Routine Analysis. All others Analyzed to request only.

ANALYTICAL PROCEDURES

A chromatographic procedure for analyzing mixtures of biphenyl and monochlorobiphenyls is included in the appendix. This method will be required to analyze Aroclor 1111 and the final product, MCBP, as well as process streams from fractionation. Also in the appendix is a procedure for measuring acidity in limed Aroclor 1111.

A chromatographic method for determining the level of 4,4'-DCBP in Aroclor 1142 or 1242 is given in the appendix. These will be required in the residue chlorination and Aroclor 1142 isomerization steps.

For all other specifications and analyses, analytical method numbers are given on the specification sheets.

The following table (Table III) indicates sample frequency and analyses required for process control.

TABLE III

SAMPLES, FREQUENCY AND ANALYSES

Step	Stream & No.	Frequency of Sampling	Sample Size	Analyses Required
Chlorination to Aroclor 1111	Crude Aroclor 1111 - Stream 13	4 to 8 hours	1 quart	Specific gravity at 85 or 65°C
MCBP Fractionation	Limed crude Stream 16	Every 24 hours	1 pint	Free HCl and excess lime
" "	Slop Cut Stream 22	Once or twice each batch near end of slop cut	1 pint of instantaneous distillate	GLC orRI for % biphenyl
" "	Product Cut Stream 23	Once or twice each batch near end of product cut	1 pint of instantaneous distillate	Crystallizing point
" "	Product cut Stream 23	Once each batch	1 quart of sample representative of total product fraction	GLC and other analyses for specifications
Chlorination to Aroclor 1142	Reaction mass Stream 31	Once or twice each batch near end of chlorination	1 quart	Specific gravity at 65°C
Isomerization	Reaction mass Stream 33	Once each batch after 4 hours of reaction	1 pint	GLC for content of 4,4'-DCBP
Aroclor 1242 Distillation	Distillate Stream 38	Once at start of run	1 quart	Distillate color to make certain lime treatment was adequate.
Finished Aroclor 1242	Product Tank Stream 39	Once for each distillation batch	3x4 pint bottles	All analyses required for specifications.

MONS 040782

PRODUCT SPECIFICATIONS

Tentative specifications for Aroclor 1111 have been included below strictly as a guide to aid in manufactureof MCBP.

AROCLOR 1111
(Tentative Specifications)

The following specifications have been derived from laboratory analyses and experiments. Deviations from these specifications may cause deterioration of yield and quality of the final product.

Biphenyl Concentration	≤ 48%
o-Chlorobiphenyl	≥ 26-1/2%
m-Chlorobiphenyl	0-3.5%
p-Chlorobiphenyl	≥ 15%
2,2'-Dichlorobiphenyl	≤ 2%

The following tentative specificstions are required for the manufacture of Aroclor 1242 from MCBP residue.

Aroclor 1142 before isomerization
area % 4,4'-DCBP 3.5% max.

Aroclor 1142 after isomerication
area % 4,4'-DCBP 2.6% max.

Tentative specifications for Monochlorobiphenyl:

Composition

Biphenyl	0.6% max.
o-Chlorobiphenyl	80.0 min.
m-Chlorobiphenyl	4.0% max.
p-Chlorobiphenyl	Remainder
Polychlorobiphenyls	1.0% max.

Physical Properties

Sp. Gr. @ 25°C/15.5°C	1.152-1.162
Refractive Index @ 25°C	1.6092-1.6112

Monsanto
ORGANIC CHEMICALS DIVISION

W. G. Krummrich Plant
FINISHED PRODUCT SPECIFICATION

PRODUCT		DEPT.
Aroclor 1242, Electrical Grade		246
PLANT	PRODUCT CODE	USE
W.G.K.	811.01	Sales, to 810.90
DATE EFFECTIVE	SALES CODE	
9/8/72	1040-241-16-03	

APPROVALS

PRODUCTION	RESEARCH
A. E. Leisy	W. P. Pichard
SALES	QUALITY CONTROL (Chief Chemist)
C. Paton	H. J. Horner

GENERAL DESCRIPTION

CHEMICAL FORMULA

MOL WT.

SUPERSEDES SPECS. OF	SAMPLE FOR ANALYSIS	ISSUED BY
10/22/69	3 x 4 Pt. Amber Bottles	R.McCutchan/S.Shaulter

CHARACTERISTIC	LIMITS	METHOD
UNRESTRICTED INFORMATION		
(R) Color (APHA	40, Max.	10,084
(R) Condition	Clear	10,084
(R) Sp. Gr. @ 25/15.5°C.	1.381 - 1.392	10,114
(R) Acidity (mg. KOH/g.)	0.010, Max.	10,087
(R) Moisture (H_2O)	35 ppm., Max.	10,620
(R) Refractive Index @ 25°C.	1.6240 - 1.6260	10,125
(R) Inorganic (Free) Chlorides	0.05 ppm., Max.	12,741
(R) Pour Point	-14°C. or lower	10,115
(R) Dielectric Constant (60 cycles @ 100°C.)	4.75 - 4.95	T-2273
(R) Hydrolysis Stability Test (As Chlorides)	0.5 ppm., Max.	12,672
(R) Monsanto Stability Test (As Chlorides)	0.4 ppm., Max.	11,503
(R) Distillation Range (ASTM D-20, Corrected)		10,117
10% Distilled by Wt.	325°C., Min.	
90% Distilled by Wg.	360°C., Max.	
Sulfates	None	12,169
Dielectric Strength @ 25°C.	35 KV, Min.	11,605
Flash Point (°F)	338 - 392	10,123
Fire Point	None	10,123
Corrosion Test (16 hours @ 210°C. with bright Aluminum Foil.)		
Change in wt. of Al %	0.0	
A.C. Color (APHA)	60, Max.	10,084
A.C. Condition	Clear	10,084
A.C. Acidity (mg. KOH/g.)	0.010, Max.	10,087
A.C. Inorganic (Free) Chlorides	0.05 ppm., Max.	12,741
Visc. @ 100°F. (SUS)	82 - 92	10,086

		Internal	Customer	
(R) Power Factor @ 100°C.,	Bulk	0.5%	1.0	T-2273
60 cycles, Max.	Drums	2.0	4.0	

MONS 040785

(R) Routine Analysis, All others Analyzed by request Only

Characteristics	Limits	Methods
GENERAL INFORMATION		
Specific Heat @ 25°C.	0.30	
Coefficient of Expansion (25-65°C.)	0.00068 cc/°C.	
Fixed Chlorine	42.5 - 43.5%	
SPECIAL CUSTOMER REQUIREMENTS		
General Electric		
Thermal Chemical Chlorides	0.65 ppm., Max.	12,722
Westinghouse		
Hydrolizable Chlorine (Westinghouse Stability Test)	1.0 ppm., Max.	T-2219

Monsanto
ORGANIC CHEMICALS DIVISION
W. G. Krummrich & Anniston

FINISHED PRODUCT SPECIFICATION

PRODUCT		DEPT.
Aroclor 1242	Non-Electrical Grade	WGK 246 27
PLANT	**PRODUCT CODE**	**USE**
WGK & Ann.	81101-82612	Sales
DATE EFFECTIVE	**SALES CODE**	
10/5/7[illegible]	1040-240-04/11/16-03/09	

APPROVALS

PRODUCTION	**RESEARCH**
A. E. Ieiny	W. A. Richard
SALES	**QUALITY CONTROL (Chief Chemist)**
W. F. Ault	R. H. Blowers

GENERAL DESCRIPTION — **CHEMICAL FORMULA**

Mixture

MOL. WT.		
SUPERSEDES SPECS. OF	**SAMPLE FOR ANALYSIS**	**ANALYSIS BY**
9/25/67	3 x 16 oz. W.M. Bottles	S. Shaulter/J. Stites

CHARACTERISTIC	LIMITS	METHOD	
UNRESTRICTED INFORMATION		WGK	Anniston
(R) Condition	Clear	10084	G-1
(R) Color, APHA	100 max.	10084	046
(R) Sp. Gr. (25/15.5°C.)	1.381 - 1.392	10114	052
(R) Acidity (mg. KOH/g.)	0.010, max.	10087	050
(R) Moisture (H_2O) (ppm)	50, max.	10620	047
Distillation Range (ASTM D-20 Corrected)		10117	14-31 54
10% Distilled by wt.	325°C., min.		
90% " " "	360°C., max.		
Viscosity @100°F. (SUS)	82 - 92	10086	049
Flash Point (°F)	338 - 392	10123	14-26 54
Fire Point	None	10123	14-28 54

PHYSICAL CONSTANTS DATA

Specific gravities of MCBP were measured. The results were:

Temp. °C	Specific Gravity
20-1/2	1.161
54	1.133
70	1.120

PHYSICAL CONSTANTS DATA

AROCLOR 1142 (Technical)

STRUCTURAL FORMULA

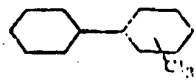

Reg. By A. M. Ellenburg

DATE 1947 7/5/57

NAME		SOURCE & DATE
Formula $C_{12}H_7Cl_3$	Total Cl_2 41.5 - 42.5%	Specs 12-21-54
Molecular Weight		
Appearance	Brown to black oily liquid	Specs 12-21-54
Boiling Point at 760 mm		
Boiling Point at ___ mm		
Boiling Point at ___ mm		
Boiling Point at ___ mm		
Crystallizing Point		
Melting Point		
Solidifying Point		
Specific Gravity 65/15.5°C	1.348-1.360	Specs 12-21-54
Specific Gravity 25/15.5°C	1.384-1.397	
Pounds per Gal. 25 °C	10.5	
Coefficient of Expansion		
Refractive Index n_D		
Infra Red Spectrum (Reference)		
Ultra Violet Spectrum (Reference)		
Viscosity		
Viscosity		
Surface Tension		
Solubility in Water		
Solubility in		
Solubility in		
Sp. Gr. Temp Coeff. (50-105°C)	0.0009/°C	Specs 12-21-54
Flash Point °F (Method) C.O.C.	350	Aroclor Bull. [illegible]
Fire Point °C	None	
Heat of Combustion		
Heat of Formation		
Thermal Stability (cal./kg/min.)		
Latent Heat of Fusion		
Latent Heat of Vap.		
Specific Heat		
Critical Temperature		
Critical Pressure		
Dissociation Constant		
Other Constants		
Toxicity (Give Reference)	Schwartz, U.S. Pub. Health Service Bull. #22[illegible] "Industrial Poisons, Hazards and Solvents" by Jacobs Vol. 1, p. 463-464, 1941.	

MONS 040789

NOTE: These data should not be released outside of Monsanto Chemical Company. Use additional sheets if necessary.

PHYSICAL CONSTANTS (cont'd.)

PHYSICAL AND CHEMICAL DATA

Diphenyl

Specific Gravity: 0.992 at 75°C/4°C.

The Swann Chemical Company bulletin of 1950 gave thermal data on diphenyl.

Viscosity of Diphenyl (from Anniston Files)

°F.	Centipoises
160	1.439
170	1.309
180	1.208
190	1.114
200	1.054
220	0.901
250	0.752
300	0.574
350	0.459
400	0.374
450	0.313
482	0.283

Specific Heat (from Anniston Files)

°F.	B.T.U./lb.
200	0.416
300	0.470
400	0.547
500	0.616
600	0.658
700	0.679
800	0.686
900	0.690
1000	0.696

PHYSICAL AND CHEMICAL DATA (Cont'd.)

Diphenyl (Cont'd.)

Another record gives the following values for liquid diphenyl:

°C.	Sp. Heat cals./gram
100	0.360
150	0.380
200	0.412
250	0.460
300	0.518
350	0.575
400	0.610
450	0.625

Vapour Cp = $\frac{0.460}{250°C.}$

$\frac{0.625}{450°C.}$ (D. A. Roper, Design Data for Units 4 & 5)

Density of Liquid Diphenyl (from Anniston files)

°C.	Grams./cc
75	0.9885
100	0.9695
150	0.9294
200	0.8885
250	0.8470
300	0.8010
350	0.7510
400	0.6918
450	0.6180

Heat of Vaporization:

65.4 g. cal./g. at 258.5°C.

"Safety and Toxicity Data"

Taken in part from the Standard Manufacturing Process for the Manufacture of Aroclors, in Dept. 246, W. G. Krummrich Plant. New material has been added, and some changes were made in the old material.

Safety Equipment

The following is a list of safety equipment (personal and departmental) required in department 246.

1. Fire extinguishers:

   A. Dry Chemical (3) - Southwest corner Bldg. OR - Main Floor

   - West wall at top of stairs of Second Floor.

   B. Carbon Dioxide Snow - Southwest corner of Bldg. OR - ground level.

2. Chlorine Gas Masks (4) - Southwest corner, second floor

   - Control room, second floor

   - East side, outside control room

   - Wall, Southwest corner of sprinkler house, main floor.

3. Scott Air Masks - West of Lean-To

4. Safety Showers (2) - Southeast corner of Bldg. OR - ground level.

   - Southeast corner of Bldg. OR - 2nd Floor.

5. Davis Vapotester

6. Eye Baths

7. Sprinkler System

Safety Precautions

The following are safety precautions followed in the operation of department 246.

1. Safety Equipment of Employee

   Each employee has the following safety equipment: (1) Hard hat, (2) Safety glasses, (3) Goggles, (4) Rubber and canvas gloves, (5) Rubber overshoes. Special equipment may be issued as necessary for performing a particular job in a safe manner.

2. Sampling of Crude Aroclor

   The samples of Aroclor taken during the chlorination reaction are hot (150°C). Precaution must be taken to avoid skin contact of samples and inhalation of Hydrogen Chloride, Chlorine and Aroclor vapors.

3. Fires

Fires may result from the ignition of leaking gas, Xylene, Diphenyl, rags, paper, wood, etc. Automatic fire extinguishers and sprinklers have been installed to combat fires.

4. Explosions

Explosions may be caused from accumulated pockets of natural gas or a rapid burning of Diphenyl in a closed container such as a Chlorinator. Chlorinators are equipped with a 10" diameter pressure relief line with a rupture disc made to burst at 22 psi in case Diphenyl within the Chlorinator ignites.

5. Toxicity

Toxicity does not present a serious problem. However, a complete daily change of clean clothes is supplied to each person and time is allotted at the end of each shift to take a bath. Instructions are also issued to avoid actual skin contact with Biphenyl and Aroclor as much as possible and to wash hands and face before eating.

6. Miscellaneous

There are many accidents that can occur that may be classified as health and safety hazards. These accidents may result from such things as broken process lines, acid leaks, steam leaks, etc.

The worst inherent hazards are as follows:

a. Free Chlorine from ruptured line or major leak.
b. HCl Gas from ruptured line or major leak.
c. Dropping bottoms from stills.
d. Hot Aroclor and Diphenyl.

CRUDE AROCLOR 1111

Toxicity: This material has a crystallizing point of 31.7° C. Since it is an Aroclor, it should have a medium toxicity range for liquid ingestion and high toxicity for vapor inhalation. The maximum allowable concentration (M.A.C.) is 1 mg/cubic meter.

Fire Hazard: Since this material contains high concentrations of biphenyl, it is very flammable and will burn when exposed to heat or flame or oxidizing materials. It has a flash point of 121° C.

Other Hazards: This material can cause dermatitis, systemic poisoning from the fumes, and yellow atrophy of the liver. There are skin, mucous membranes and eye hazards encountered in handling this material.

Treatment and Antidotes: Call a physician and remove patient from fumes.

Storage and Handling: Protect the skin, lungs, and eyes by wearing approved protective clothing, respirator, and goggles. People who handle this material at elevated temperatures should have medical supervision, and the air should be sampled to insure compliance with M.A.C. There are no special storage restrictions under normal conditions except store in a ventilated area.

Shipping: There are no special shipping restrictions.

FERRIC CHLORIDE ($FeCl_3$)

Toxicity: This material is a solid under normal conditions and is nontoxic or has a rating as low.

Fire Hazard: There is no fire hazard under normal conditions, but it will emit toxic fumes at high temperatures.

Other Hazards: Some people are allergic to this material and may develop skin rash, and there is an eye hazard.

Treatment and Antidotes: Call a physician.

Storage and Handling: Protect the skin with approved protective clothing, avoid the breathing of $FeCl_3$ dust, wear approved respirator with adequate cartridge, and protect the eyes with approved goggles. There are no storage regulations.

Shipping: There are no shipping restrictions.

DIPHENYL ($C_6H_5C_6H_5$)

Toxicity: This material is a solid at normal conditions and is medium toxic. The M.A.C. of vapor is 2 mg/cubic meter of air. If ingested the lethal dose is 2.4 g/Kg of body weight. The fumes are not dangerously deadly, but they are poisonous over a prolonged time.

Fire Hazard: Diphenyl is very flammable and will burn when exposed to heat or flame or oxidizing materials.

Other Hazards: Diphenyl is not too corrosive to skin, but it will affect the eyes.

Treatment and Antidotes: Wash eyes with water and get the patient to fresh air. Try to get patient to vomit, and call a physician.

Storage and Handling: This material can be stored in steel containers away from fire hazards and oxidizing agents. Wear suitable clothes and approved goggles when handling diphenyl.

Shipping: Ship in cars or other suitable containers with a red warning label of flammability.

LIME $Ca(OH)_2$

Toxicity: Lime is not dangerously toxic, and it is regarded as more of a nuisance. This material is a solid or slurry.

Fire Hazard: This material is not flammable.

Other Hazards: Lime is very hazardous to the eyes. It will burn the skin also, and the dust will affect the mucous membrane.

Treatment and Antidotes: Flood eyes and skin with large quantities of water. If lime is ingested, get patient to vomit and call physician.

Storage and Handling: Lime can be stored in steel containers, and people should wear protective clothing, respirators, and rubber or chemical safe goggles when handling lime.

Shipping: There are no special restrictions for shipping, but the containers should have a white label, a caustic warning.

HYDROGEN CHLORIDE (HCl)

Toxicity: This material is a gas under normal conditions and is very toxic. The M.A.C. is 5-10 ppm and a concentration of 1500-2000 ppm would be fatal to humans in a few minutes.

Fire Hazard: There is no fire hazard under normal conditions, but wet gas reacts with some metals to form hazardous hydrogen.

Other Hazards: This material is hazardous to teeth, skin, eyes, and mucous membranes.

Treatment and Antidotes: Wash profusely with water, if injested, eat chalk, magnesium hydroxide, egg whites, and milk, and also administer oxygen. Call a physician.

Storage and Handling: This material should be stored in a cool, well ventilated area away from oxidizing agents. This material can be stored in rubber lined, glass, or tantalum vessels. People handling this material should wear suitable clothing like rubber goggles or chemical safe grades and approved pack or canister gas masks.

Shipping: Shipping containers must have a white warning label and a non-flammable label. Ship in appropriate containers such as rail car or carboy.

CHLORINE (Cl_2)

Toxicity: This material is a gas under normal conditions and is very toxic. The M.A.C. is 0.35 to 2 ppm. A concentration of 1000 ppm would be rapidly fatal. Least concentration with detectable odor is 3.5 ppm.

Fire Hazard: There is no fire hazard under normal conditions, but there is an explosion hazard if chlorine is mixed with a strong reducing agent such as hydrogen or hydrocarbons at high temperature.

Other Hazards: This material causes eye, skin, and mucous membrane irritation.

Treatment and Antidotes: The patient should be given oxygen immediately and treated for shock. Call a physician.

Storage and Handling: This material should be stored in a ventilated and cool place away from fire hazards. When handling, wear a gas mask or approved respirator, clothing and rubber or chemical safe goggles. In strong chlorine concentrations, wear canister gas masks, Scott air pack, or oxygen breathing apparatus.

Shipping: The shipping containers must have a green gas label and a non-flammable label on. Ship in steel cars or cylinders.

MONOCHLOROBIPHENYL

Toxicity: This material has a crystallizing point near room temperature. It tends to supercool, so that it is usually in the liquid form. It is an Aroclor and so should have a medium toxicity range for liquid ingestion and high toxicity for vapor inhalation. The maximum allowable concentration is 1 mg/cubic meter.

Fire Hazard: This material has some flammability. It has a flash point (open cup) of 154°C.

Other Hazards: This material can cause dermatitis, systemic poisoning from the fumes, and yellow atrophy of the liver. There are skin, mucous membranes and eye hazards encountered in handling this material.

Treatment and Antidotes: Call a physician and remove patient from fumes.

Storage and Handling: Protect the skin, lungs, and eyes by wearing approved protective clothing, respirator, and goggles. People who handle this material at elevated temperatures should have medical supervision, and the air should be sampled to insure compliance with M.A.C. There are no special storage restrictions under normal conditions except store in a ventilated area.

Shipping: There are no special shipping restrictions.

AROCLORS 1242, 1254, 1142 and 1154 MONS 040797

Toxicity: This material is a liquid under normal conditions and has a medium toxicity range for liquid ingestion and high toxicity for vapor inhalation. The maximum allowable concentration (M.A.C.) is 1 mg/cubic meter.

Fire Hazard: There is no fire hazard under normal conditions. Aroclor mixes (Xylene, Toluene, Butyl Acetate, etc.) may burn and explode at high temperatures when exposed to flames.

ALUMINUM CHLORIDE

Description: Yellowish-white granular crystals.

Formula: $AlCl_3$

Constants:

Mol. Wt. 133.35
M.P. 192.4°C
B.P. 180.2°C (sublimes)
Density 2.44
Vap. Press. 1 mm @ 100.0°C

Toxicity: See Chlorides and Hydrochloric Acid

Disaster Control: Dangerous; when heated to decomposition, it emits highly toxic fumes of hydrochloric acid; will react with water or steam to produce heat, toxic or corrosive fumes.

Storage and Handling: Section 7 of "Dangerous Properties of Industrial Materials" by Sax.

ENVIRONMENTAL PROTECTION

There is a total of six byproduct streams from this process. The largest of these is Stream 12, 59.1 lbs. of scrubbed HCl gas. Based on past plant experience in the offgas scrubbing tower, it is estimated that this gas will contain approximately 45 ppm of total chlorobiphenyls. It can be disposed of as is presently done by piping it to the chlorosulfonic acid department.

Two of these byproduct streams are distillation residues, 2.1 lbs. of MCBP fractionation residue (Stream 26) and 2.7 lbs. of Aroclor 1142 distillation residue (Stream 37). Both streams contain, besides PCB's, lime and $FeCl_3$, and Stream 37 contains, in addition, $AlCl_3$. Both streams should be passed on to a straight takeover still for recovery of polychlorobiphenyl values. The final residue from this distillation should be incinerated.

The last three waste streams to be considered are vent losses from the various distillations. The vent loss from fractionation (Stream 20) was calculated on the basis of an air leakage rate of 15 lbs/hr, and a condenser outlet temperature of 80°C. The total organic vent loss amounts to 0.31 lb/hr of which 0.08 lb/hr is monochlorobiphenyl (almost all o-CBP). The rest (0.23 lb/hr) is biphenyl. PCB concentrations in this vent loss should be in the ppm range.

The second vent loss to be considered is Stream 25, vent loss from distillation of fractionator residue. This vent loss was calculated on the basis of 15 lb/hr air leakage and a condenser outlet temperature of 97°C. This vent loss is 2.7 lb/hr. 66% of this is monochlorobiphenyls. The rest is PCB's. This quantity could be cut in half by distilling at 80 Torr rather than 40 Torr. Since the material is approximately 23% chlorine, it should be possible to do this. A further reduction could be obtained by passing this vent stream through a cold condenser to reduce the gas temperature to perhaps 40°C. Most of the vapor passing the first condenser would freeze out in this vent condenser. The condensate could be melted off the cooling coils at appropriate intervals and collected for incineration. In this way, the vent loss from the still would be reduced to 0.08 lb/hr of which perhaps 20% would be PCB's and the rest monochlorobiphenyls.

The last vent loss is from the Aroclor 1242 still. This loss is estimated to be 0.08 lbs/hr of PCB's. However, since Aroclor 1242 is presently manufactured at the Krummrich Plant, actual plant experience should provide the best guide as to the actual vent loss.

It is very likely that, in the future, distillation vent losses will have to be reduced to lower the amounts of PCB's entering the atmosphere, especially if monochlorobiphenyl is considered as a PCB. It may be possible to do this by the addition of cold vent condensers or beds packed with solid adsorbents.

D. R. Cova

APPROVED:

J. F. Quinn
Manager, Engineering Technology

W. R. Richard
Manager, R&D

J. R. Savage
Manager, Manufacturing

R. M. Kountz
Managering, Engineering