PLAINTIFF'S EXHIBIT

CT-808

CERTAINTEED

asbestos-cement pressure pipe

FLUID-TITE® COUPLING



engineering drawings and dimensions

CTD010521

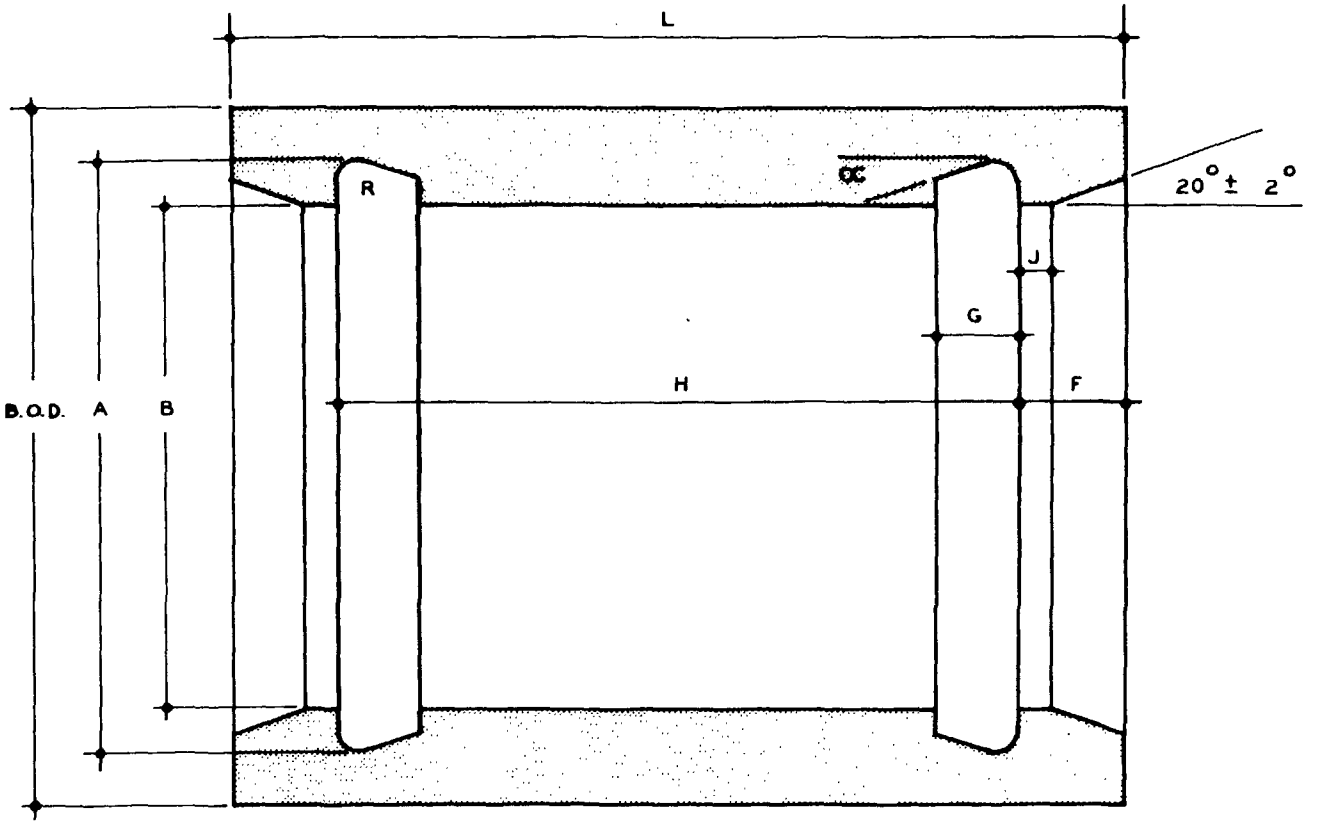

CERTAIN-TEED PRODUCTS CORPORATION
PIPE DIVISION

FLUID-TITE COUPLING
CLASS 100, 150, 200

DR JKH	APP	CK	APP	DATE AUG 63	SCALE 3/4" = 1"
		PRINT ISSUED	DWG NO 2		REV NO.

CTD010522

NOM. SIZE PIPE & CLASS	A ±.025	B ±.025"	B.O.D." **	H +.000" -.063"	L ±.25" -.00"	F -.000"	G +.04" -.00"	R +.01"	J +.03 .00"	OC +0° -1°
3"-100	4.57	3.850	5.35	4.500	6.25	.812	.62	.125	.25	18
4"-100	5.57	4.755	6.47	4.875	6.50	.812	.70	.125	.25	18
6"-100	7.84	7.025	8.82	4.875	6.50	.812	.70	.125	.25	18
8"-100	10.10	9.230	11.28	5.875	7.50	.812	.75	.125	.25	18
10"-100	12.13	11.260	13.39	5.875	7.50	.812	.75	.125	25	18
12"-100	14.31	13.440	15.96	6.125	7.75	.812	.75	.125	25	18
14"-100	16.10	15.205	17.86	7.000	9.00	1.000	.85	.125	40	12
16"-100	18.18	17.285	20.11	7.000	9.00	1.000	.85	.125	.40	12
18"-100	21.20*	20.080*	23.90	8.500	11.10	1.300	1.00	.125	.50	12
20"-100	23.42*	22.300*	26.36	8.500	11.10	1.300	1.00	.125	.50	12
24"-100	27.78*	26.660*	31.28	8.500	11.10	1.300	1.00	.125	.50	12
3"-150	4.69	3.950	5.55	4.500	6.25	.812	.62	.125	.25	18
4"-150	5.74	4.925	6.66	4.875	6.50	.812	.70	.125	.25	18
6"-150	7.84	7.025	8.96	4.875	6.50	.812	.70	.125	.25	18
8"-150	10.10	9.230	11.46	5.875	7.50	.812	.75	.125	.25	18
10"-150	12.65	11.780	14.51	5.875	7.50	.812	.75	.125	.25	18
12"-150	14.91	14.040	17.05	6.125	7.75	.812	.75	.125	.25	18
14"-150	17.25	16.365	19.80	7.000	9.00	1.000	.85	.125	.40	12
16"-150	19.49	18.605	22.28	7.000	9.00	1.000	.85	.125	.40	12
18"-150	22.24*	21.120*	25.33	8.500	11.10	1.300	1.00	.125	.50	12
20"-150	24.58*	23.460*	27.97	8.500	11.10	1.300	1.00	.125	.50	12
24"-150	29.26*	28.140*	33.24	8.500	11.10	1.300	1.00	.125	.50	12
3"-200	4.69	3.950	5.75	4.500	6.25	.812	.62	.125	.25	18
4"-200	5.74	4.925	6.94	4.875	6.50	.812	.70	.125	.25	18
6"-200	7.84	7.025	9.24	4.875	6.50	.812	.70	.125	.25	18
8"-200	10.10	9.230	11.70	5.875	7.50	.812	.75	.125	.25	18
10"-200	12.65	11.780	14.72	5.875	7.50	.812	.75	.125	.25	18
12"-200	14.91	14.040	17.26	6.125	7.75	.812	.75	.125	.25	18
14"-200	17.25	16.365	20.30	7.000	9.00	1.000	.85	.125	.40	12
16"-200	19.49	18.605	22.78	7.000	9.00	1.000	.85	.125	.40	12

*—A and B Tolerance for 18", 20" and 24": ±.040"

**—Subject to Manufacturing Tolerances.

CTD010523

DISTRICT OFFICES

ATLANTA PIPE DISTRICT
Suite 254
3272 Peachtree Road, N. E.
Atlanta, Georgia 30305
Area Code 404 Telephone: 237-6331, 6332

CLEVELAND PIPE DISTRICT
Suite 110, One Commerce Park Square
23200 Chagrin Boulevard
(Beachwood)
Cleveland, Ohio 44122
Area Code 216 Telephone: 464-8060

DENVER PIPE DISTRICT
Suite 4G, Bankers Union Life Building
2401 E. Second Avenue
P. O. Box 6285
Denver, Colorado 80206
Area Code 303 Telephone: 388-5751

HOUSTON PIPE DISTRICT
Texas Gas Building Suite 275
2472 Bolsover Road
P. O. Box 25185
Houston, Texas 77005
Area Code 713 Telephone: JAckson 6-1037, 3717

LOS ANGELES PIPE DISTRICT
California Federal Savings Bldg., Suite 242
1695 Crescent Avenue
Anaheim, California 92801
Area Code 714 Telephone: 774-3900
From Los Angeles: 213-625-1915

Phoenix Branch Office
Suite 206
3625 No. 16th Street
Phoenix, Arizona 85016
Area Code 602 Telephone: 274-3642

PHILADELPHIA PIPE DISTRICT
Maple & Wissahickon Avenues
Ambler, Pennsylvania 19002
Area Code 215 Telephone: 646-9350

ST. LOUIS PIPE DISTRICT
Suite 110
12015 Manchester Road
(Des Peres)
St. Louis, Missouri 63131
Area Code 314 Telephone: YOrktown 6-3010

SAN FRANCISCO PIPE DISTRICT
Second Floor Marina Building
77 Jack London Square
Oakland, California 94607
Area Code 415 Telephone: 444-4022

PIPE FACTORIES AT AMBLER, PA., ST LOUIS, MO., SANTA CLARA & RIVERSIDE, CALIF., HILLSBORO, TEXAS

PIPE DIVISION

CERTAINTEED

CERTAIN-TEED PRODUCTS CORPORATION, Ambler, Pennsylvania 19002

Certain-teed, FLUID-TITE, and CERTA-SPACER are trademarks of Certain-teed Products Corporation, Ardmore, Pa

AP-52 7-67

Printed in U.S.A.

CTD010524

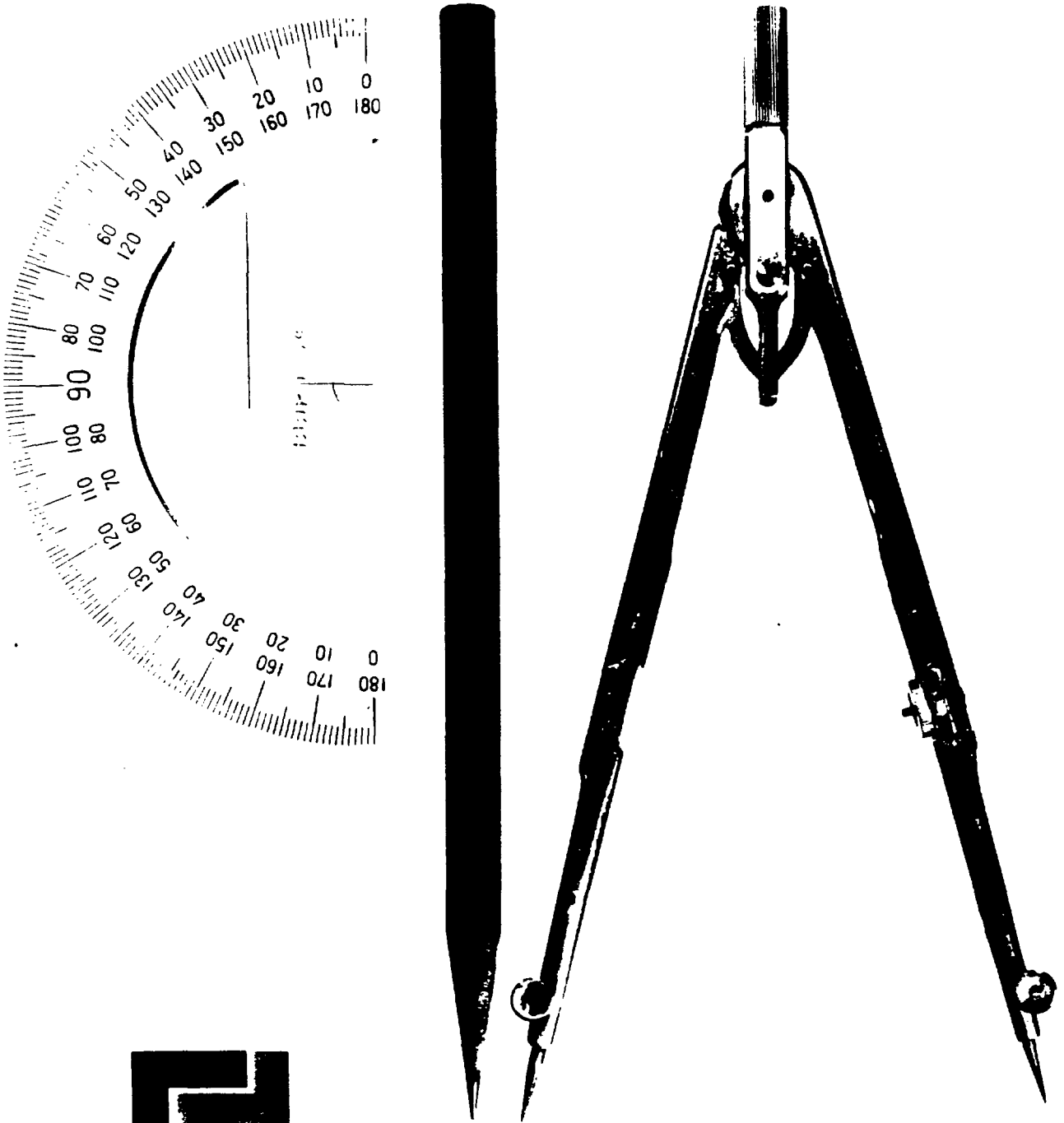

CERTAINTEED

asbestos-cement pressure pipe

engineering drawings and dimensions

CTD010525

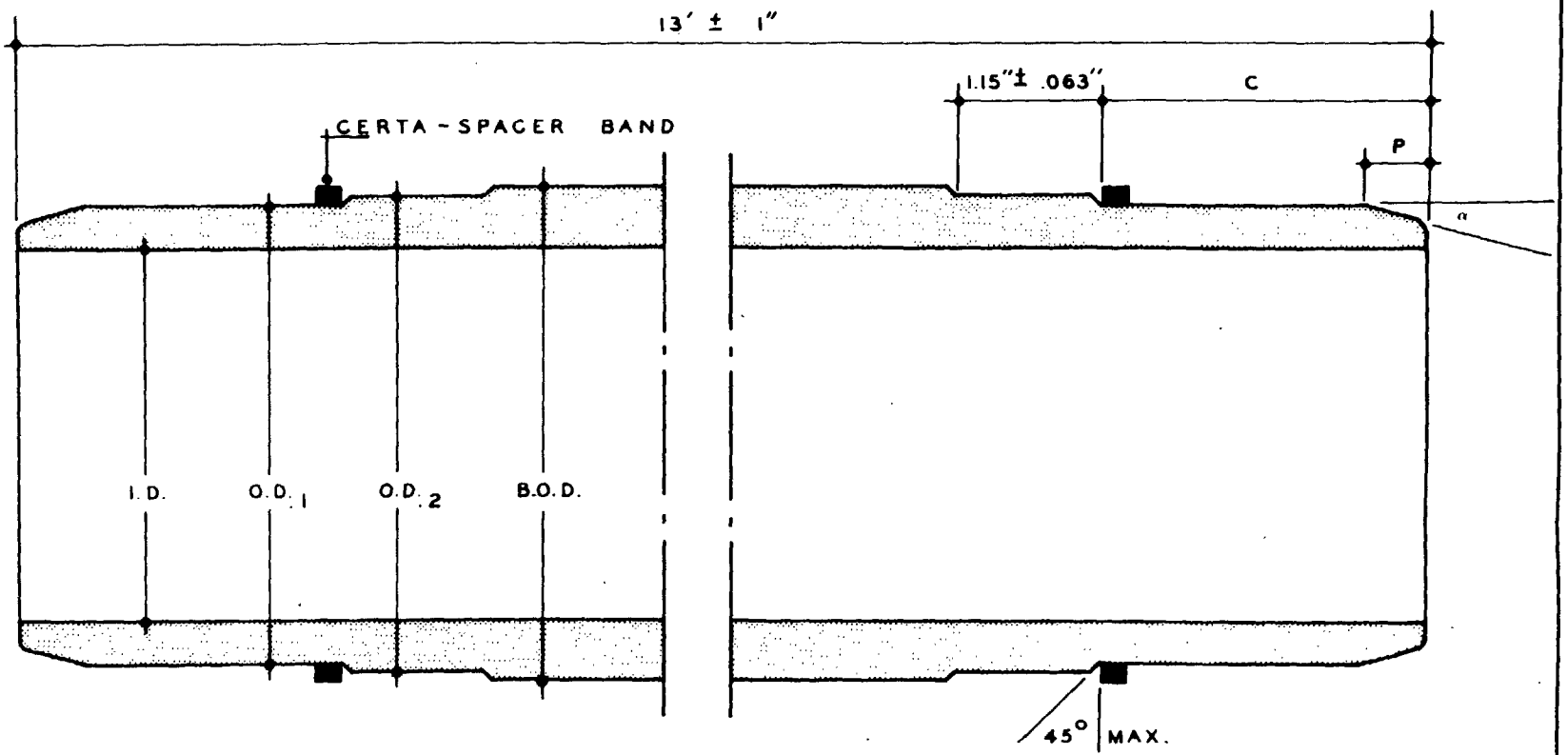

CERTAIN-TEED PRODUCTS CORPORATION
PIPE DIVISION

FLUID-TITE PIPE
CLASS 100, 150, 200

DR JRH	APP	CK	APP	DATE AUG 85	SCALE 3/4" = 1"
		PRINT ISSUED	DWG NO 1		REV NO

CTD010526

NOM. SIZE PIPE & CLASS	NOM. I.D."	NOM. B.O.D."**	O.D.$_1$ ± .02"	O.D.$_2$ ± .02"	C ± .06"	P ± .06"	α ± 2°
3"-100	3.00	3.99	3.74	3.90	2.60	.50	16°
4"-100	4.00	4.89	4.64	4.80	2.90	.75	16°
6"-100	6.00	7.16	6.91	7.07	2.90	.75	16°
8"-100	8.00	9.36	9.11	9.27	3.40	1.00	16°
10"-100	10.00	11.39	11.14	11.30	3.40	1.00	16°
12"-100	12.00	13.82	13.32	13.48	3.50	1.00	16°
14"-100	13.60	15.32	15.07	15.23	4.00	1.00	20°
16"-100	15.50	17.40	17.15	17.31	4.00	1.00	20°
18"-100	18.00	20.64	19.90*	20.06*	4.88	1.00	22°
20"-100	20.00	22.94	22.12*	22.28*	4.88	1.00	22°
24"-100	24.00	27.46	26.48*	26.64*	4.88	1.00	22°
3"-150	3.00	4.09	3.84	4.00	2.60	.50	16°
4"-150	4.00	5.06	4.81	4.97	2.90	.75	16°
6"-150	5.85	7.16	6.91	7.07	2.90	.75	16°
8"-150	7.85	9.36	9.11	9.27	3.40	1.00	16°
10"-150	10.00	11.91	11.66	11.82	3.40	1.00	16°
12"-150	12.00	14.17	13.92	14.08	3.50	1.00	16°
14"-150	14.00	16.47	16.22	16.38	4.00	1.00	20°
16"-150	16.00	18.71	18.46	18.62	4.00	1.00	20°
18"-150	18.00	21.32	20.94*	21.10*	4.88	1.00	22°
20"-150	20.00	23.66	23.28*	23.44*	4.88	1.00	22°
24"-150	24.00	28.34	27.96*	28.12*	4.88	1.00	22°
3"-200	3.00	4.29	3.84	4.00	2.60	.50	16°
4"-200	4.00	5.34	4.81	4.97	2.90	.75	16°
6"-200	5.70	7.46	6.91	7.07	2.90	.75	16°
8"-200	7.60	9.67	9.11	9.27	3.40	1.00	16°
10"-200	9.60	11.97	11.66	11.82	3.40	1.00	16°
12"-200	11.47	14.17	13.92	14.08	3.50	1.00	16°
14"-200	13.60	16.47	16.22	16.38	4.00	1.00	20°
16"-200	15.50	18.71	18.46	18.62	4.00	1.00	20°

*—O.D.$_1$ and O.D.$_2$ Tolerance for 18", 20" and 24": ± .03"
**Subject to Manufacturing Tolerances

CTD010527

CTD010528

DISTRICT OFFICES

ATLANTA PIPE DISTRICT
Suite 470
3272 Peachtree Road, N.E.
Atlanta, Georgia 30305
Area Code 404 Telephone: 237-6331, 6332

CLEVELAND PIPE DISTRICT
Suite 110, One Commerce Park Square
23200 Chagrin Boulevard
(Beachwood)
Cleveland, Ohio 44122
Area Code 216 Telephone: 464-8060

HOUSTON PIPE DISTRICT
Texas Gas Building Suite 275
2472 Bolsover Road
P. O. Box 25185
Houston, Texas 77005
Area Code 713 Telephone: JAckson 6-1037, 3717

LOS ANGELES PIPE DICTRICT
California Federal Savings Bldg., Suite 242
1695 Crescent Avenue
Anaheim, California 92801
Area Code 714 Telephone: 774-3900
From Los Angeles: 213-625-1915

Phoenix Branch Office
Suite 206
3625 No. 16th Street
Phoenix, Arizona 85016
Area Code 602 Telephone: 274-3642

PHILADELPHIA PIPE DISTRICT
Maple & Wissahickon Avenues
Ambler, Pennsylvania 19002
Area Code 215 Telephone: 646-9350

SAN FRANCISCO PIPE DISTRICT
Second Floor Marina Building
77 Jack London Square
Oakland, California 94607
Area Code 415 Telephone: 444-4022

ST. LOUIS PIPE DISTRICT
Suite 110
12015 Manchester Road
(Des Peres)
St. Louis, Missouri 63131
Aea Code 314 Telephone: YOrktown 6-3010

PIPE FACTORIES AT AMBLER, PA.; ST. LOUIS, MO.; SANTA CLARA & RIVERSIDE, CALIF.; HILLSBORO, TEXAS

PIPE DIVISION

CERTAIN-TEED

CERTAIN-TEED PRODUCTS CORPORATION, Ambler, Pennsylvania 19002

CERTAIN-TEED., *FLUID-TITE, and CERTA-SPACER are trademarks of Certain-teed Products Corporation, Ardmore, Pa.*

AP-51 2-68

Printed in U.S.A

