PLAINTIFF'S EXHIBIT

CT-1164



American Water Works Association

AWWA C401–77

(Revision of
AWWA C401–64)

AWWA STANDARD PRACTICE

for

THE SELECTION OF ASBESTOS–CEMENT DISTRIBUTION PIPE, 4 IN. THROUGH 16 IN., FOR WATER AND OTHER LIQUIDS

First edition approved by AWWA Board of Directors Jan. 27, 1964.
This edition approved May 8, 1977.

AMERICAN WATER WORKS ASSOCIATION
6666 West Quincy Avenue, Denver, Colorado 80235

CTD013356

Committee Personnel

The Standards Committee on Asbestos–Cement Pressure Pipe, which reviewed and approved this standard, had the following personnel at the time of approval:

R. S. BRYANT, *Chairman*
J. L. WARDEN, *Vice-Chairman*
T. R. GILLEN, *Secretary*

Consumer Members

S. C. BAKER, Naval Facilities Engineering Command, Alexandria, VA	(NAVFAC)
L. C. BRADLEY, Water Department, Fort Worth, TX	(AWWA)
P. J. BRADY, Portsmouth Water Department, Portsmouth, VA	(AWWA)
R. S. BRYANT, Department of Water and Power, Los Angeles, CA	(ASCE)
F. G. DENSON, Works & Operations Department, Winnepeg, Manitoba	(AWWA)
R. GRAFF, Water Utilities, San Diego, CA	(AWWA)
J. E. JOHNSON,* U.S. Bureau of Reclamation, Denver, CO	(BUREC)
R. A. MARCHAND, Water Department, Warren, OH	(AWWA)
J. L. WARDEN, U.S. Bureau of Reclamation, Denver, CO	(BUREC)

General Interest Members

G. C. ANDERSON, Insurance Services Office, New York, NY	(ISO)
R. A. BARROWS, C.E. Maguire, Inc., Waltham, MA	(NEWWA)
V. R. BICKEL, Department of Environmental Health, Albuquerque, NM	(APWA)
S. L. BISHOP,* Metcalf & Eddy, Boston, MA	(NEWWA)
C. L. FRICK,* Insurance Services Office, New York, NY	(ISO)
R. S. HOLMGREN JR., James M. Montgomery, La Jolla, CA	(AWWA)
F. A. OBERT, Metcalf & Eddy, Boston, MA	(WPCF)
J. S. SLICER, Factory Mutual Research, Norwood, MA	(FMR)
M. R. SUCHOMEL, Underwriters Laboratories, Northbrook, IL	(UL)
W. TAGGART, Wright–McLaughlin Engineering, Denver, CO	(ASCE)

Producer Members

A. E. ALPINE, Cement Asbestos Products Co., Birmingham, AL	(AWWA)
T. R. GILLEN, Johns–Manville Sales Corp., Denver, CO	(AWWA)
J. C. JACKSON, Asbestos–Cement Pipe Producers Association, Washington, D.C.	(ACPPA)
A. I. LEFF,* CertainTeed Products Corp., Valley Forge, PA	(AWWA)
W. R. SEIPT, CertainTeed Products Corp., Valley Forge, PA	(AWWA)
D. W. SULLIVAN, Carlon, An Indian Head Co., Cleveland, OH	(AWWA)

* Alternate

© Copyright 1977 by American Water Works Assn.
Printed in US

CTD013357

Table of Contents

SEC.		PAGE
	Foreword	
I.	History of Standard	iv
II.	Major Revisions	iv
	Standard	
1	**General**	1
1.1	Scope	1
1.2	References	1
2	**Pipe Design and Selection**	2
2.1	Strength and Design Factors	2
2.2	Combined-Loading Theory	2
2.3	Three-Edge Bearing Load Factors	3
2.4	Hydrostatic Pressures	3
2.5	External Loads	4
2.6	Selection Curves	7
	Appendix	
A1	General	17
A2	Tables	17
	Tables	
1	Typical Field Installation Conditions	2
2	Correlation of Bedding Conditions, Pipe Size, and Load Factors	3
3	Impact Factors Caused by Moving Vehicles	7
4	Values of Load Coefficients for Concentrated and Distributed Superimposed Loads Centered Vertically Over Conduit	8
5	Values of Load Coefficients C_a for Concentrated Superimposed Loads Centered Vertically Over Conduit	8
A1	Determination of Design Load w Applied in 3-Edge Bearing	18
A2	Design Internal Pressure and Design Earth Load Intercepts for Use With Selection Curves	20
	Figures	
1	Load Pressure Curve	3
2	Crushing Test Assembly	3
3	Graph for Determining Load Coefficient Values	5
4	Graph for Determining C_a Coefficients	6
5	Concentrated Superimposed Load	7
6	Distributed Superimposed Load	7
7	Selection Curves for 4-in. Asbestos–Cement Pipe	10
8	Selection Curves for 6-in. Asbestos–Cement Pipe	11
9	Selection Curves for 8-in. Asbestos–Cement Pipe	12
10	Selection Curves for 10-in. Asbestos–Cement Pipe	13
11	Selection Curves for 12-in. Asbestos–Cement Pipe	14
12	Selection Curves for 14-in. Asbestos–Cement Pipe	15
13	Selection Curves for 16-in. Asbestos–Cement Pipe	16
A1	Earth Load Conditions	17
A2	Bedding Conditions Illustrated	17

CTD013358

Foreword

This foreword is for information only and is not a part of AWWA C401.

I. History of Standard

The information contained in this standard was first published as, "AWWA Handbook H2," with AWWA Board of Directors approval on Jan. 27, 1964. The designation was changed later to, "AWWA C401–64." Originally, it covered sizes 4–36 in. although the design was primarily based on service conditions generally related with smaller (4–16 in.) distribution sizes. In the smaller diameters the effect of water hammer generated by the opening and closing of fire hydrants can be of significant magnitude because of the high velocities generated by open hydrant flow conditions on small diameter lines in distribution systems. It is difficult to evaluate accurately the magnitude of surges, and if calculated, it would be impractical to attempt to control the surge by the use of surge tanks or other devices.

Rather than employ a rule-of-thumb surge allowance based upon an assumed velocity change, a large factor of safety is applied to the class pressure rating of the pipe to take into account the undetermined surges.

AWWA C403, "Standard Practice for the Selection of Asbestos–Cement Transmission and Feeder Main Pipe, 18 in. Through 42 in.," is a standard containing information similar to that contained herein but dealing with larger diameter pipes. In AWWA C403 the design is based on evaluation of all design conditions including surge pressures. Also, adequate factors of safety are applied to the combination of pressures to which the pipe line will be subjected.

The primary difference between AWWA C401 and AWWA C403 is one of differing methods for designing pipelines to account for surge pressures. In the small sizes where surges can be of great magnitude and are impractical to control, a large factor of safety is employed to compensate for the unknown. In the large sizes the design is based upon a more detailed evaluation of the magnitude of surge pressures, and a factor of safety based upon a more precise knowledge of actual operating conditions is employed.

II. Major Revisions

Major changes to the 1964 edition of this standard made in this revision are:

1. The title has been changed to indicate that the pipe is intended for use in distribution systems.
2. The size range has been changed to limit the maximum size covered by this standard to 16-in. diameter pipe.
3. Figure 2, Crushing Test Assembly, has been changed to show the C dimension to be approximately 1 in./ft of internal pipe diameter but in no case less than 1 in.

CTD013359

American Water Works Association

AWWA C401-77

(Revision of
AWWA C401-64)

AWWA Standard Practice for

The Selection of Asbestos–Cement Distribution Pipe, 4 in. Through 16 in., for Water and Other Liquids

Section 1—General

Sec. 1.1—Scope

This standard has been prepared so that design engineers can quickly determine the correct class of asbestos–cement pipe to use under various combinations of internal pressure and external loading. Curves are included to expedite the selection of the correct class of pipe. Detailed analyses of the various structural factors affecting pipe design and selection are treated under separate headings.

1.1.1 *Pressure classes.* Pipe pressure class designations of 100, 150, and 200 refer to the similarly numbered classes specified in AWWA C400, "Standard for Asbestos–Cement Distribution Pipe, 4 in. Through 16 in., for Water and Other Liquids."

1.1.2 *Installation.* Detailed coverage of the installation of asbestos–cement pipe can be found in AWWA C603, "Standard for the Installation of Asbestos–Cement Pressure Pipe."

Sec. 1.2—References

This standard references the following documents. They form a part of this standard to the extent specified herein. In any case of conflict, the requirements of this standard shall prevail.

1. SCHLICK, W.J. Supporting Strengths for Cast-Iron Pipe for Water and Gas Service, *Iowa State Col. Eng. Sta. Bull.,* No. 146 (Jun. 1940).

2. ASCE. *Design and Construction of Sanitary and Storm Sewers,* Manual of Engineering Practice No. 37, Am. Soc. Civ. Engrs., New York (1967).

3. KERR, S.L. Practical Aspects of Water Hammer, *Jour. AWWA,* 40: 699 (Jun. 1948).

4. MARSTON, ANSON. The Theory of External Loads on Closed Conduits in the Light of Latest Experiments, *Iowa State Coll. Eng. Exp. Sta. Bull.,* No. 96 (1930).

CTD013360

Section 2—Pipe Design and Selection

Sec. 2.1—Strength and Design Factors

The strength of asbestos–cement water pipe must be sufficient to withstand the combined forces of internal hydrostatic pressure and external loads. Furthermore, the conditions under which the pipe is installed will have a direct relationship to its ability to resist these forces. Therefore, satisfactory pipe performance in field service requires that the bedding conditions, as well as the internal and external forces acting on the pipe, be taken into consideration when selecting a class of pipe for any given installation. Finally, sound engineering practice requires that adequate safety factors be applied to strength requirements to ensure performance under less than ideal conditions.

2.1.1 *Bedding conditions.* The bedding conditions described in Table 1 have been selected as representative of typical installation conditions encountered in the field. They are illustrated in Fig. A2 in the appendix.

TABLE 1

Typical Field Installation Conditions

Bedding Condition Class	Description
A	Gravel or sand base, backfill tamped
B	Same as A but backfill not tamped
C	Pipe laid on earth mounds or pipe barrel on flat trench bottom with excavated coupling holes, backfill tamped
D	Same as C but backfill not tamped

2.1.2 *Safety factors.* In the selection curves, a safety factor of 4.0 is applied to the operating pressure and a safety factor of 2.5 is applied to earth loads. Furthermore, pipe selected from the curves will have a safety factor of at least 2.5 for the operating pressure when combined with a safety factor of 2.5 for resisting an earth load consisting of the total equivalent earth load plus a 10 000-lb wheel load and impact load. Under impact loading conditions, the 2.5 safety factor for the operating pressure represents sound design practice, for it is unlikely that internal surge pressure would occur at the same instant as external impact.

Sec. 2.2—Combined-Loading Theory

Tests of asbestos–cement pipe under various combinations of internal pressure and external load applied in three-edge bearing (see Sec. 2.3) indicate that there is a relationship between the combined loads at the point of pipe fracture. This relationship can be represented by a parabolic curve as shown in Fig. 1. The equation for the load pressure parabolic curve shown in Fig. 1 may be expressed as:

$$w = W\sqrt{\frac{P - p}{P}} \qquad \text{Eq 1}$$

in which, P is the internal pressure, in pounds per square inch, that will burst the pipe when no external load exists; W is the external load, in pounds per lineal foot of pipe in the three-edge bearing test, that will crush the pipe when no internal pressure exists; p is the internal pressure, in pounds per square inch which, in combination with some external load w applied in three-

CTD013361

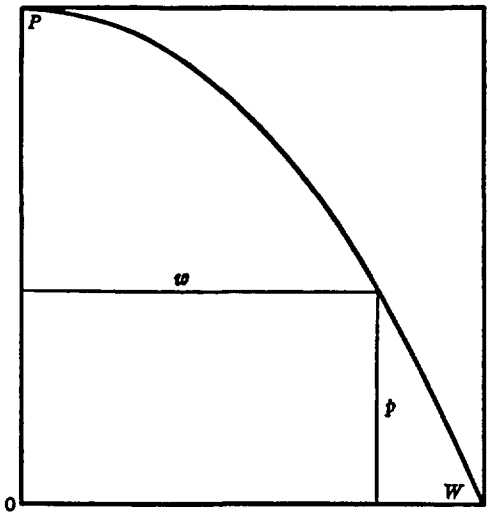

Fig. 1. Load Pressure Curve

P *represents the internal pressure;* W *the external load.*

edge bearing, will fracture the pipe; and w is the external load, in pounds per lineal foot of pipe applied in three-edge bearing which, in combination with some internal pressure p, will fracture the pipe.

Sec. 2.3—Three-Edge Bearing Load Factors

A convenient method of testing pipe for crushing strength W is the three-edge-bearing method of loading shown in Fig. 2. Because the field supporting strength of a conduit is influenced by the bedding conditions and the lateral pressure acting against the sides of the conduit, it is necessary to apply a load factor to the three-edge bearing loads in order to correlate them to the field loads. Since the external load equals the load factor times the three-edge bearing load, the load factor equals the external load divided by the three-edge bearing load. Table 2 shows load factors to be applied for each of the bedding conditions described in Table 1.

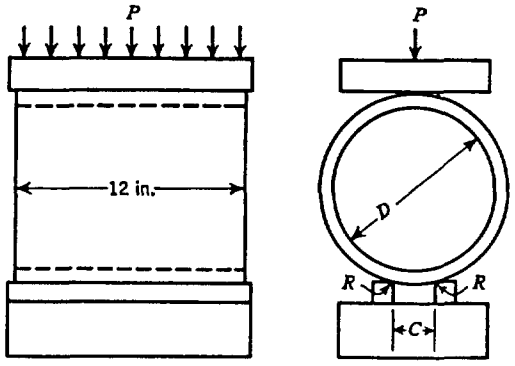

Fig. 2. Crushing Test Assembly

The diagram at the left shows a side view of the test assembly; that at the right, an end view. P *represents load;* R, *approximately 0.5 in.—the radius of the bearings;* D, *the nominal diameter of the pipe; and* C, *the clear space between supports.* C *should be approximately 1 in./ft of internal pipe diameter but in no case less than 1 in.*

TABLE 2

Correlation of Bedding Conditions, Pipe Size, and Load Factors

Bedding Class	Pipe Size *in.*	Load Factor
A	4–12	1.7
	14–16	1.8
B	4–16	1.5
C	4–12	1.3
	14–16	1.4
D	4–16	1.1

Sec. 2.4—Hydrostatic Pressures

The hydrostatic pressures to be considered in pipeline design are static operating pressure and surge pressure. The static pressure will be fixed by the particular field service condition. Ordinary surge pressure conditions are allowed for in this standard by applying a safety factor of at least 4.0 to internal pressure in combined loading.

CTD013362

2.4.1 *Exceptional surge pressures.* When exceptional surge pressures are a necessary specific consideration in design, a conservative basis for surge allowance determination is the method proposed by S. Logan Kerr. His method considers the fundamental relations affecting water hammer, including velocity of flow in the pipeline, length of the pipeline, time of valve operation or interruption of flow, and the pressure wave velocity. Water hammer allowance is determined by the formulas of Eq 2 and 3.

$$h = 2.3p = \frac{aV}{g} \qquad \text{Eq 2}$$

in which,

h is the water hammer allowance, in feet; p is the water hammer allowance, in pounds per square inch; a is the velocity of the pressure wave, in feet per second; g is the acceleration due to gravity (32.2 fps/s); and V is the flow line velocity, in feet per second, cut off by the valve operation or other action in the critical time, or less.

$$a = \frac{4660}{\sqrt{1 + \frac{k}{E}\cdot\frac{d}{e}}} \qquad \text{Eq 3}$$

in which,

a is the pressure wave velocity in feet per second; k is the modulus of compression of water, in pounds per square inch (290 000–300 000 psi); E is the modulus of elasticity of asbestos–cement pipe, in pounds per square inch (3 400 000 psi); d is the internal diameter, in inches; and e is the wall thickness, in inches.

Sec. 2.5—External Loads

External-load determinations for underground conduit used in this standard are based on the data in Chapter 9 of the *Manual on Design and Construction of Sanitary and Storm Sewers* produced jointly by ASCE and WPCF. External loads on conduit are of two types: (1) those due to gravity earth loads and (2) those due to superimposed loads that may be static or moving.

2.5.1 *Gravity earth loads.* The magnitude of gravity earth loads may be computed by using the theory developed by Anson Marston which states, in general, that the load on a buried conduit is equal to the weight of a prism of earth (called the interior prism) directly over the conduit plus or minus the frictional shearing forces transferred to that prism by the adjacent prisms of earth. The magnitude and direction of these frictional forces are a function of the amount of relative settlement occurring between the interior and adjacent earth prisms. The general form of Marston's equation is

$$W = CwB^2 \qquad \text{Eq 4}$$

in which,

W is the vertical load, per lineal foot, acting on the conduit because of gravity earth loads; w is the weight of earth, in pounds per cubic foot; B is the trench or conduit width, depending on installation conditions; and C is the coefficient that includes the effect of:

1. The ratio of the height of the fill to the width of the trench or conduit,
2. the shearing forces between the interior and adjacent earth prisms,
3. the direction and amount of relative settlement between interior and adjacent earth prisms for embankment conditions, and
4. the rigidity of conduit support for embankment conditions.

2.5.1.1 Values for external loads may be determined by Marston's for-

CTD013363

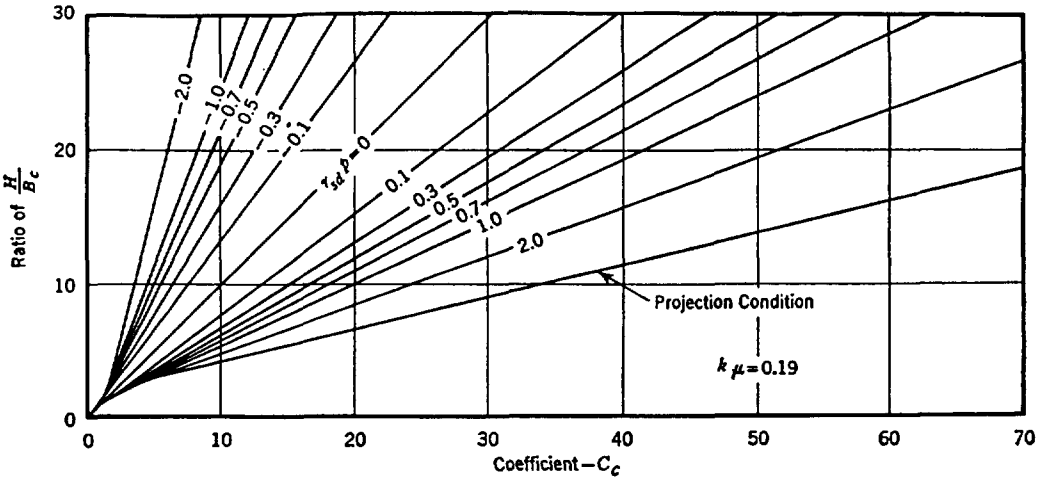

Fig. 3. Graph for Determining Load Coefficient Values

The graph shows a plot of load coefficient values C_c *against values obtained by dividing the height of the fill above the conduit by the outside width of the conduit* H/B_c.

mula as shown in Eq 5. Tables of external loads based on soil weight of 120 lb/cu ft are presented in Table A1 in the appendix.

$$W_c = C_c w (B_c)^2 \qquad \text{Eq 5}$$

in which,

W_c is the load on the conduit, in pounds per lineal foot; w is the unit weight of the soil, in pounds per cubic foot; B_c is the outside width of conduit, in feet; and C_c is the load coefficient.

In this formula load coefficient C_c is a function of H/B_c, p, r_{sd}, μ, and k. H is the height of the fill above the conduit, in feet. The projection ratio p is the ratio of the distance of the top of the conduit above the natural grade to the width of the conduit. r_{sd} is the settlement ratio, μ is the coefficient of internal friction of the backfill material, and k is the Rankins ratio of lateral pressure to vertical pressure.

2.5.1.2 Based on a Class C flat-bottomed, backfill-tamped trench, conservative values of $p = 1.0$, $r_{sd}p = 0.70$, and $k\mu = 0.192$ were used in the determination of external loads for the performance curves. C_c values may be determined from Fig. 3, which shows a plot of C_c against H/B_c ratios. For values of H/B_c greater than 1.3, when $r_{sd}p = 0.70$, the graph is linear and values may be determined by the empirical equation

$$C_c = 1.892 \frac{H}{B_c} - 0.96 \qquad \text{Eq 6}$$

2.5.1.3 Occasionally, a trench condition exists in which the width of the trench is less than two or three times the widths of the conduit. In such cases, Marston's trench condition formula may be used for determinations of the gravity loads.

$$W_d = C_d w (B_d)^2 \qquad \text{Eq 7}$$

in which,

W_d is the vertical load, in pounds per lineal foot; B_d is the width of the trench; w is the weight of the backfill soil in pounds per cubic foot, and C_d is a load coefficient. (See Fig. 4 for values of C_d.)

CTD013364

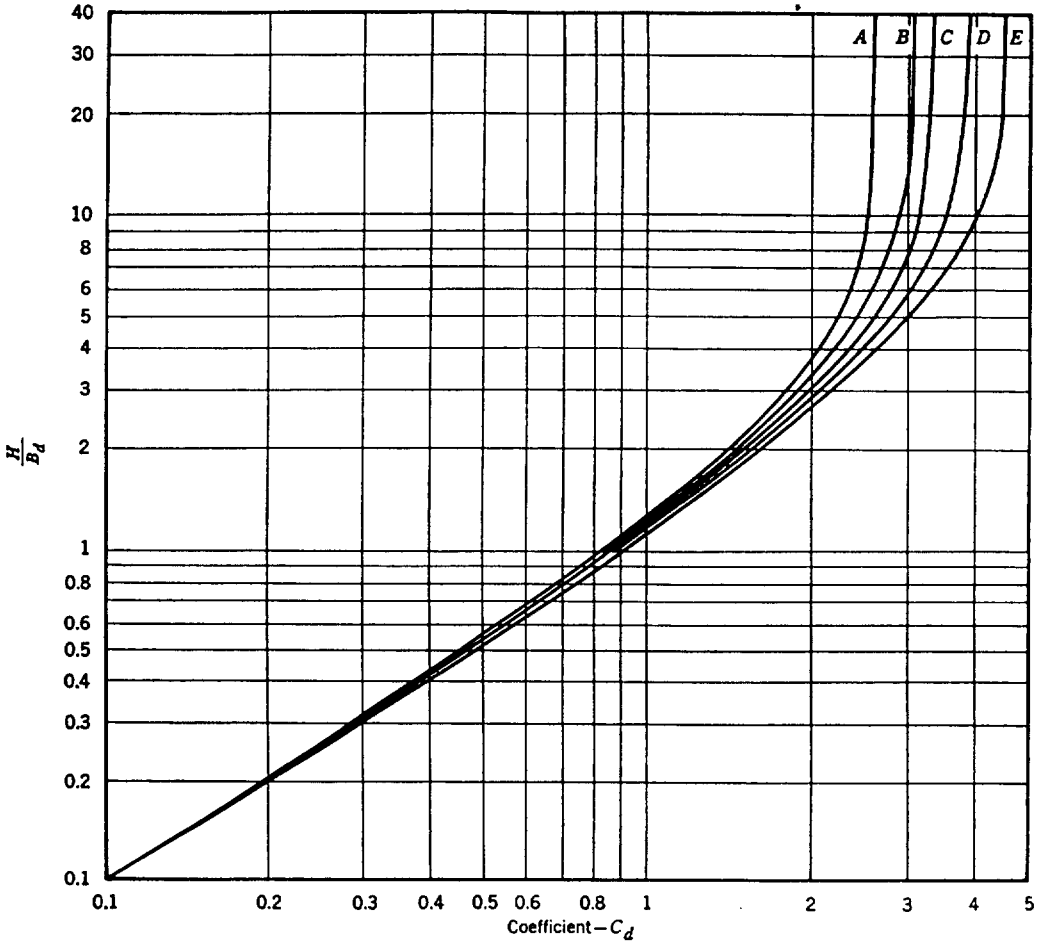

Fig. 4. Graph for Determining C_d Coefficients

Each of the above curves represent C_d *values for* $k\mu$ *and* $k\mu'$. A *represents 0.1924 for* ***granular materials without cohesion;*** B *is 0.165 maximum for sand and gravel;* C *is* ***0.150 maximum for saturated top soil;*** D, *0.13 maximum for ordinary clay; and* E, *0.110 maximum for saturated clay. The symbol* μ', *is the coefficient of friction between the backfill material and the sides of the ditch.*

2.5.2 *Superimposed loads.* Where unusually heavy superimposed loads or impact loads are present, the solution of their magnitude may be computed for either a concentrated load (such as a truck load) or a distributed load condition. Normal truck and accompanying impact loads need not be considered when the depth of the cover is greater than 6 ft.

2.5.2.1 *Concentrated load.* The magnitude of a superimposed load produced by a concentrated load (see Fig. 5) is determined by use of the formula

$$W_{sc} = C_s \frac{PF}{L} \qquad \text{Eq 8}$$

in which,

W_{sc} is the load on the conduit, in pounds per lineal foot; P is the concentrated load, in pounds; F is the impact factor used to allow for the effects

CTD013365

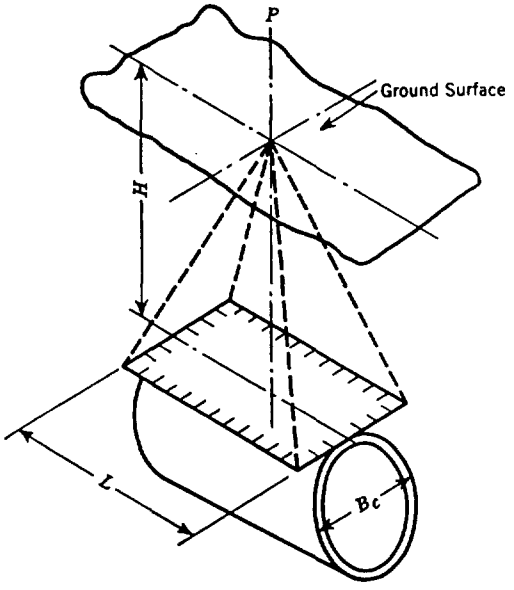

Fig. 5. Concentrated Superimposed Load

P *represents the concentrated load;* H, *the height from the top of the conduit to the ground surface;* B_c, *the width of the conduit; and* L, *the length of the conduit.*

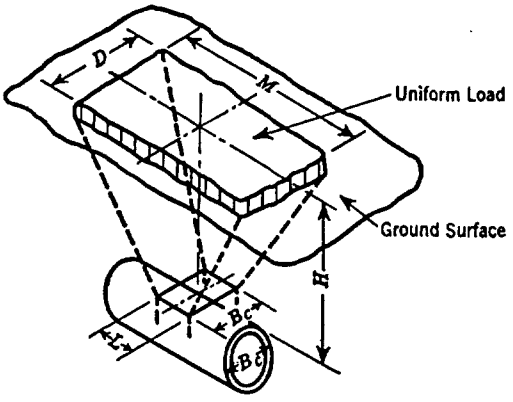

Fig. 6. Distributed Superimposed Load

D *and* M *are the width and length, in feet, respectively, of the area over which the distributed load acts. The uniform load is lbs per sq ft acting on area* D × M.

of dynamic loads due to moving vehicles (see Table 3); C_s is a load coefficient, a function of $B_c/2H$ and $L/2H$ (see Tables 4 and 5); B_c is the width of the conduit, in feet (OD of the pipe); H is the height from the top of the conduit to the ground surface, in feet; and L is the effective length of the conduit, in feet. L is 3 ft for conduits greater than or equal to 3 ft in length, but is the actual length for conduits less than 3 ft in length.

2.5.2.2. *Distributed load.* In the case of a distributed superimposed load, the formula may be written in the form of

$$W_{sd} = C_s p F B_c \qquad \text{Eq 9}$$

in which,

W_{sd} is the load on the conduit, in pounds per lineal foot (see Fig. 6); p is the intensity of distributed load, in pounds per square foot; F is the impact factor (see Table 3); B_c is the width of conduit, in feet; C_s is a load coefficient, a function of $D/2H$ and $M/2H$ (see Table 4); H is the height from the top of the conduit to the ground surface, in feet; and D and M are the width and length, respectively of the area over which the distributed load acts, in feet.

TABLE 3

Impact Factors Caused by Moving Vehicles

Type of Traffic	Impact Factor F
Highway	1.50
Railway	1.75
Airfield runways, taxiways, aprons, or hardstands	1.00 1.50

Sec. 2.6—Selection Curves

Research tests and the application of statistical analysis have shown that asbestos–cement pipe strength may be graphically illustrated by combined-loading parabolic curves. The com-

CTD013366

TABLE 4

Values of Load Coefficients for Concentrated and Distributed Superimposed Loads Centered Vertically Over Conduit

$D/2H$ or $B_c/2H$	$\frac{M}{2H}$ or $\frac{L}{2H}$													
	0.1	0.2	0.3	0.4	0.5	0.6	0.7	0.8	0.9	1.0	1.2	1.5	2.0	5.0
0.1	0.019	0.037	0.053	0.067	0.079	0.089	0.097	0.103	0.108	0.112	0.117	0.121	0.124	0.128
0.2	0.037	0.072	0.103	0.131	0.155	0.174	0.189	0.202	0.211	0.219	0.229	0.238	0.244	0.248
0.3	0.053	0.103	0.149	0.190	0.224	0.252	0.274	0.292	0.306	0.318	0.333	0.345	0.355	0.360
0.4	0.067	0.131	0.190	0.241	0.284	0.320	0.349	0.373	0.391	0.405	0.425	0.440	0.454	0.460
0.5	0.079	0.155	0.224	0.284	0.336	0.379	0.414	0.441	0.463	0.481	0.505	0.525	0.540	0.548
0.6	0.089	0.174	0.252	0.320	0.379	0.428	0.467	0.499	0.524	0.544	0.572	0.596	0.613	0.624
0.7	0.097	0.189	0.274	0.349	0.414	0.467	0.511	0.546	0.584	0.597	0.628	0.650	0.674	0.688
0.8	0.103	0.202	0.292	0.373	0.441	0.499	0.546	0.584	0.615	0.639	0.674	0.703	0.725	0.740
0.9	0.108	0.211	0.306	0.391	0.463	0.524	0.574	0.615	0.647	0.673	0.711	0.742	0.766	0.784
1.0	0.112	0.219	0.318	0.405	0.481	0.544	0.597	0.639	0.673	0.701	0.740	0.774	0.800	0.816
1.2	0.117	0.229	0.333	0.425	0.505	0.572	0.628	0.674	0.711	0.740	0.783	0.820	0.849	0.868
1.5	0.121	0.238	0.345	0.440	0.525	0.596	0.650	0.703	0.742	0.774	0.820	0.861	0.894	0.916
2.0	0.124	0.244	0.355	0.454	0.540	0.613	0.674	0.725	0.766	0.800	0.849	0.894	0.930	0.956

TABLE 5

Values of Load Coefficients C_e for Concentrated Superimposed Loads Centered Vertically Over Conduit

Pipe Size in.	Depth of Cover—ft										
	2	2.5	3	4	5	6	8	10	12	16	20
4	0.105	0.076	0.055	0.033	0.022	0.016	0.009	0.006	0.004	0.002	0.0015
6	0.147	0.106	0.078	0.046	0.031	0.023	0.013	0.008	0.006	0.003	0.002
8	0.191	0.137	0.102	0.061	0.041	0.029	0.017	0.010	0.008	0.004	0.003
10	0.237	0.174	0.129	0.078	0.052	0.037	0.022	0.013	0.009	0.006	0.0035
12	0.279	0.202	0.153	0.092	0.062	0.044	0.025	0.016	0.011	0.007	0.004
14	0.317	0.232	0.175	0.106	0.071	0.050	0.030	0.018	0.013	0.008	0.005
16	0.354	0.259	0.197	0.121	0.081	0.057	0.034	0.021	0.015	0.009	0.0055

bined-loading theory developed by the late W.J. Schlick is used as the basis for selection curves for asbestos–cement water pipe.

2.6.1 *Curve development.* The selection curves included in this standard were developed using the load-pressure formula, with the external load intercept being the external load as tabulated in Table 2 of AWWA C400–77, "Standard for Asbestos–Cement Distribution Pipe, 4 in. Through 16 in., for Water and Other Liquids," and the design point on the parabolic curve being that condition existing at a 5-ft depth of cover with the trench width assumed as pipe ID plus 2 ft, a bedding condition of Class C and a soil weight of 120 lb/cu ft. The external loads were based on the positive projecting conduit analysis because this analysis produced the governing load on the pipe at the conditions previously set forth. The design point for each class of pipe is based on a safety factor of 4 times the pipe pressure class and 2.5 times the three-edge bearing equivalent of the trench load. Once the parabolic curve has been established through the external load inter-

CTD013367

cept and the control point, the equivalent depth of cover scale is correlated for the various bedding conditions utilizing either the trench load condition or the positive-projecting conduit-load condition, whichever is the governing load condition.

2.6.2 *Curve use.* The curves may be used conveniently by entering them through the depth of cover and bedding condition scales. The scales are correlated to the three-edge bearing equivalents of the design external loads with a safety factor of 2.5. When there is an external loading condition different from that due only to depth of cover, or when conditions warrant a change in the safety factor, the equivalent external load should be determined and the selection curve entered at the proper value on the design external load scale. The field supporting strength listed for pipe so selected has been proved conservative during many years of performance under various field conditions.

2.6.2. *Example.* The application of the curves to design is shown in the following problem:

Required: A 6-in. pipe to operate at a pressure of 120 psi at 8 ft depth of cover. Bedding condition Class C, soil weight 120 lb/cu ft.

Solution: Enter the selection curve for 6-in. pipe at bedding condition Class C, 8 ft cover. The intersection of the 8-ft cover line with the 120 psi operating pressure line falls between pipe Classes 100 and 150. Use 6 in., Class 150.

The intersection of the 8-ft cover line with the Class 150 curve is at 135 psi operating pressure, or 550 psi design pressure. Therefore, the pressure safety factor equals $550/120 = 4.6$, with a safety factor of 2.5 for external load.

2.6.3 *Curves.* The selection curves for 4 in. through 16 in. asbestos–cement pipe are shown in Figs. 7 through 13 respectively.

CTD013368

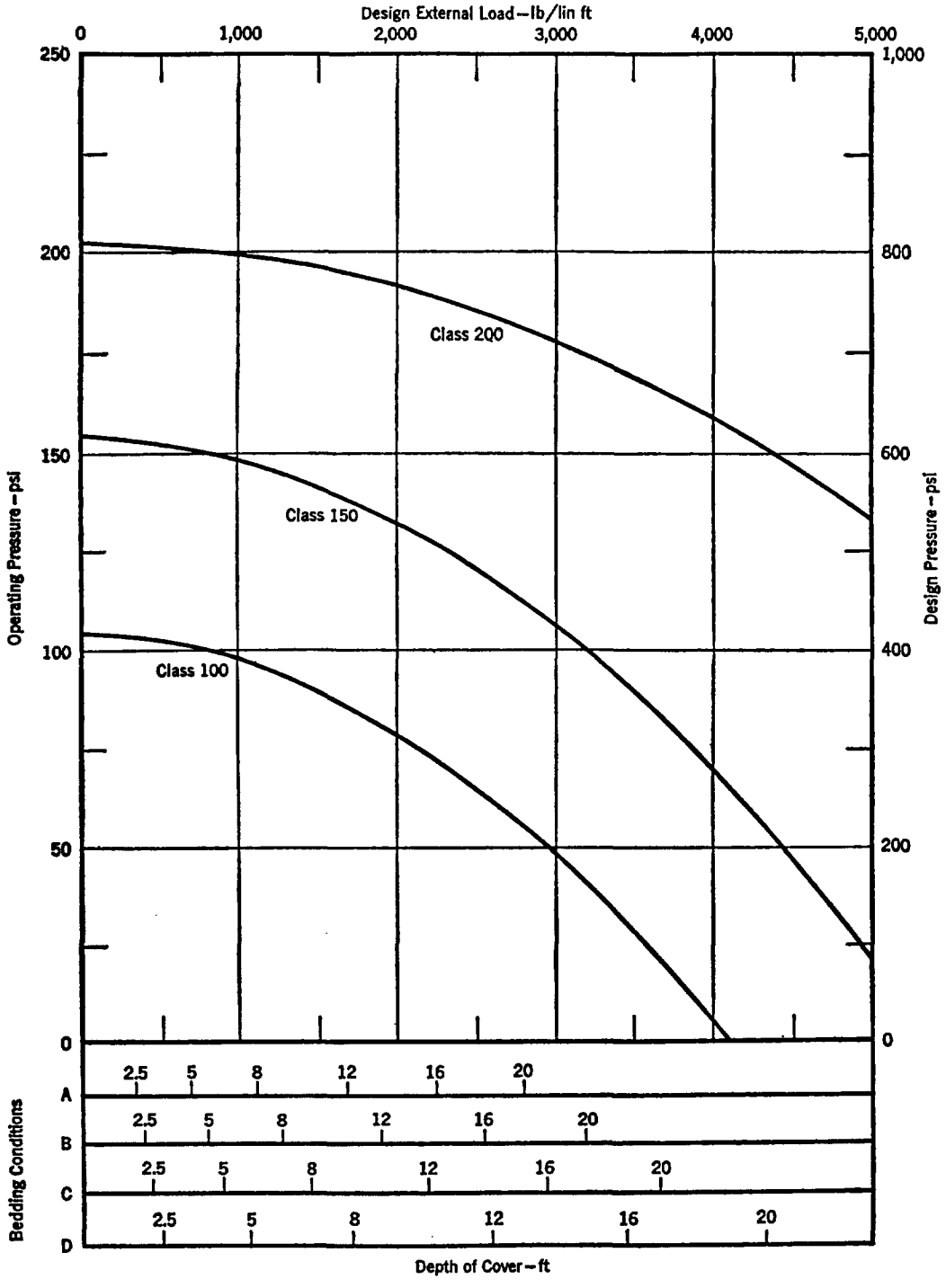

Fig. 7. Selection Curves for 4-in. Asbestos–Cement Pipe

CTD013369

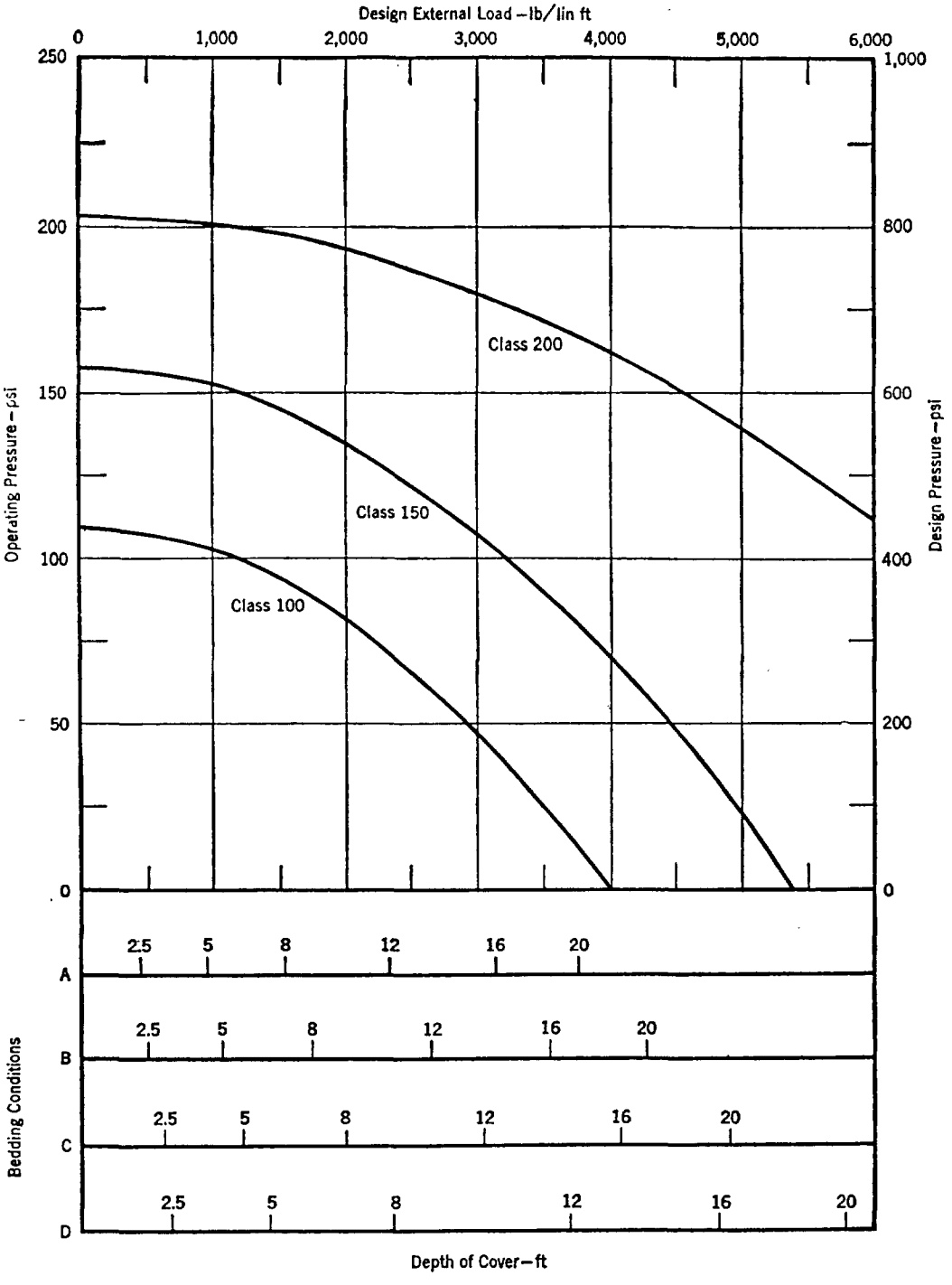

Fig. 8. Selection Curves for 6-in. Asbestos–Cement Pipe

CTD013370

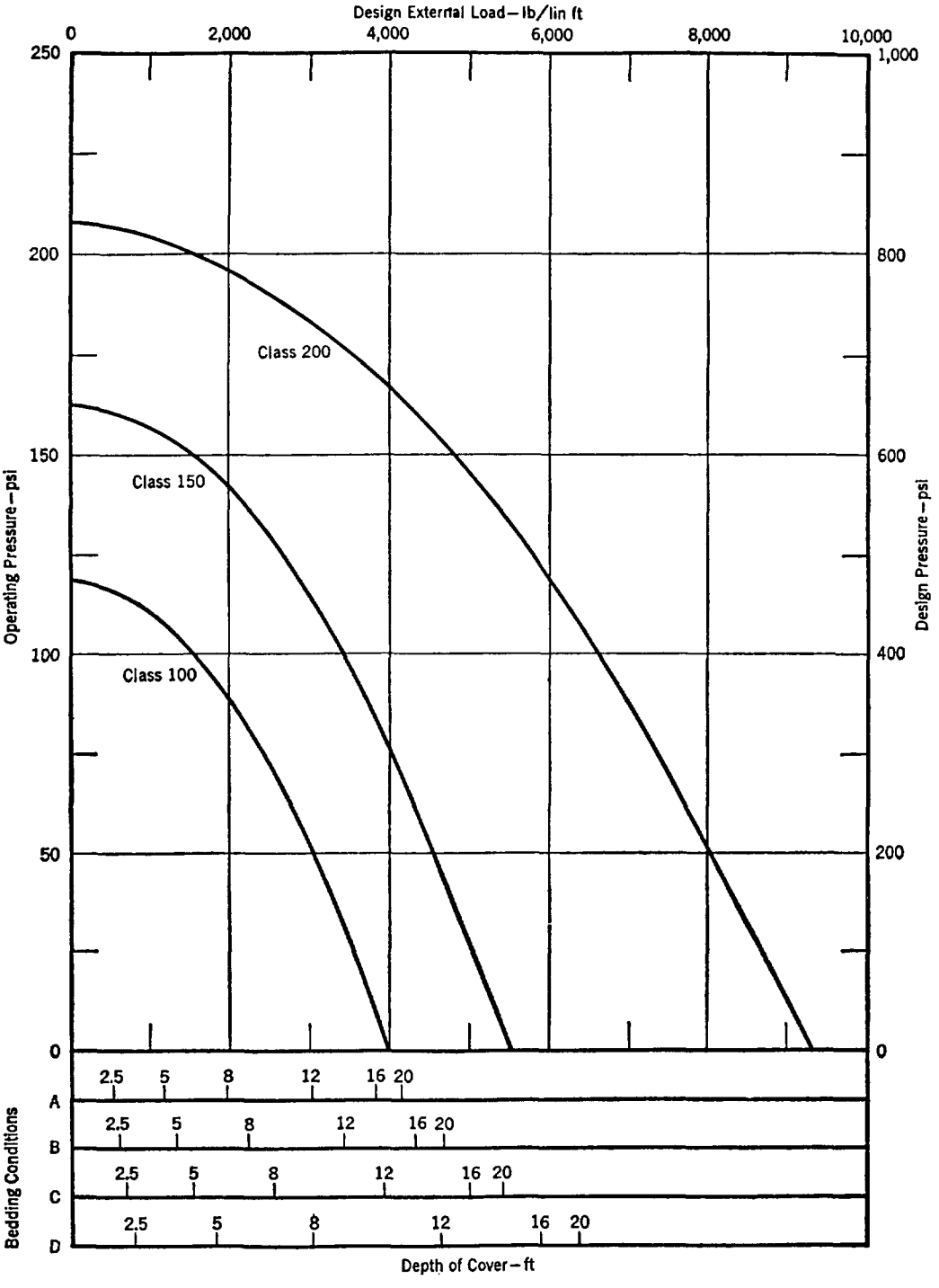

Fig. 9. Selection Curves for 8-in. Asbestos–Cement Pipe

CTD013371

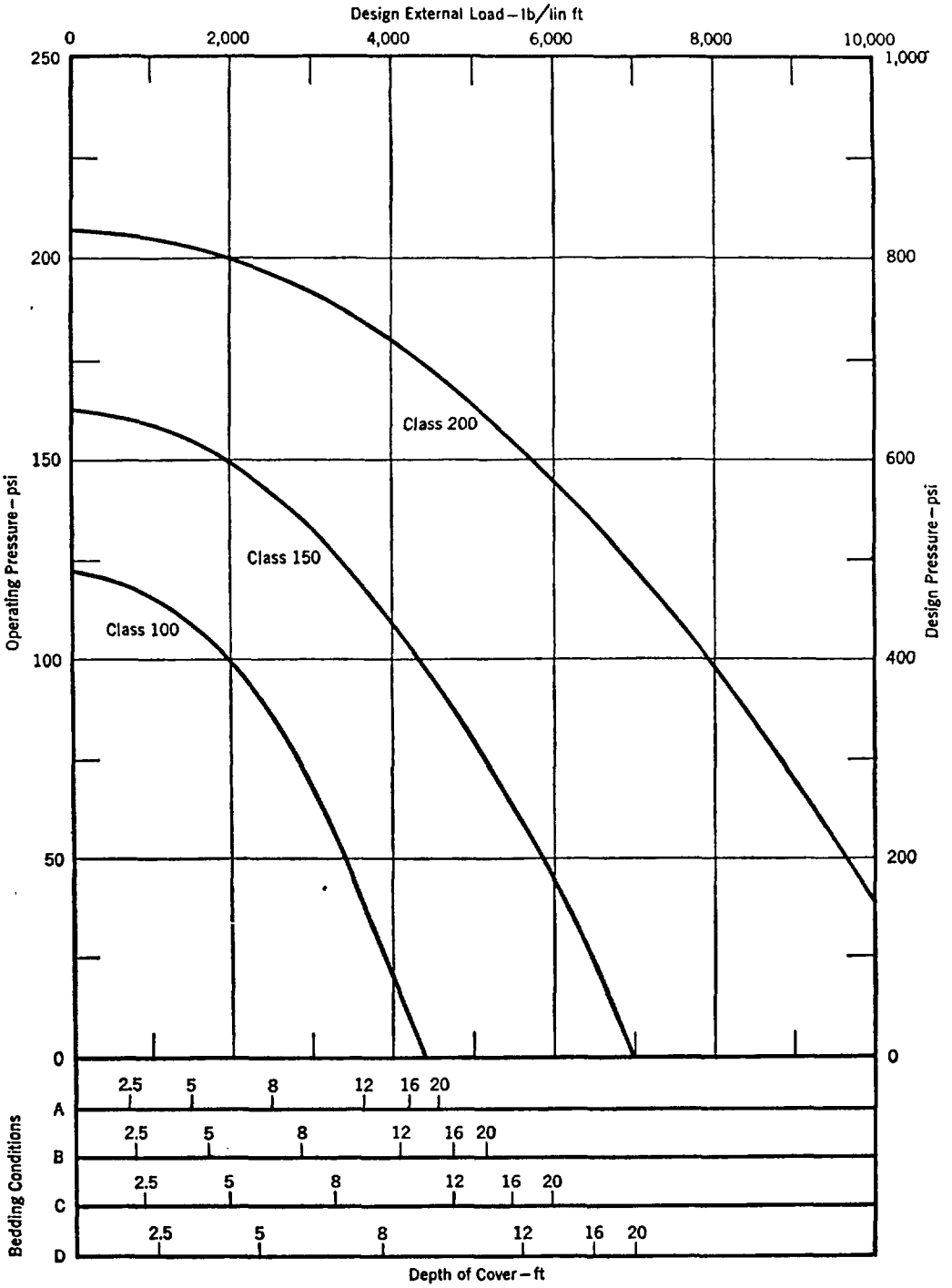

Fig. 10. Selection Curves for 10-in. Asbestos–Cement Pipe

CTD013372

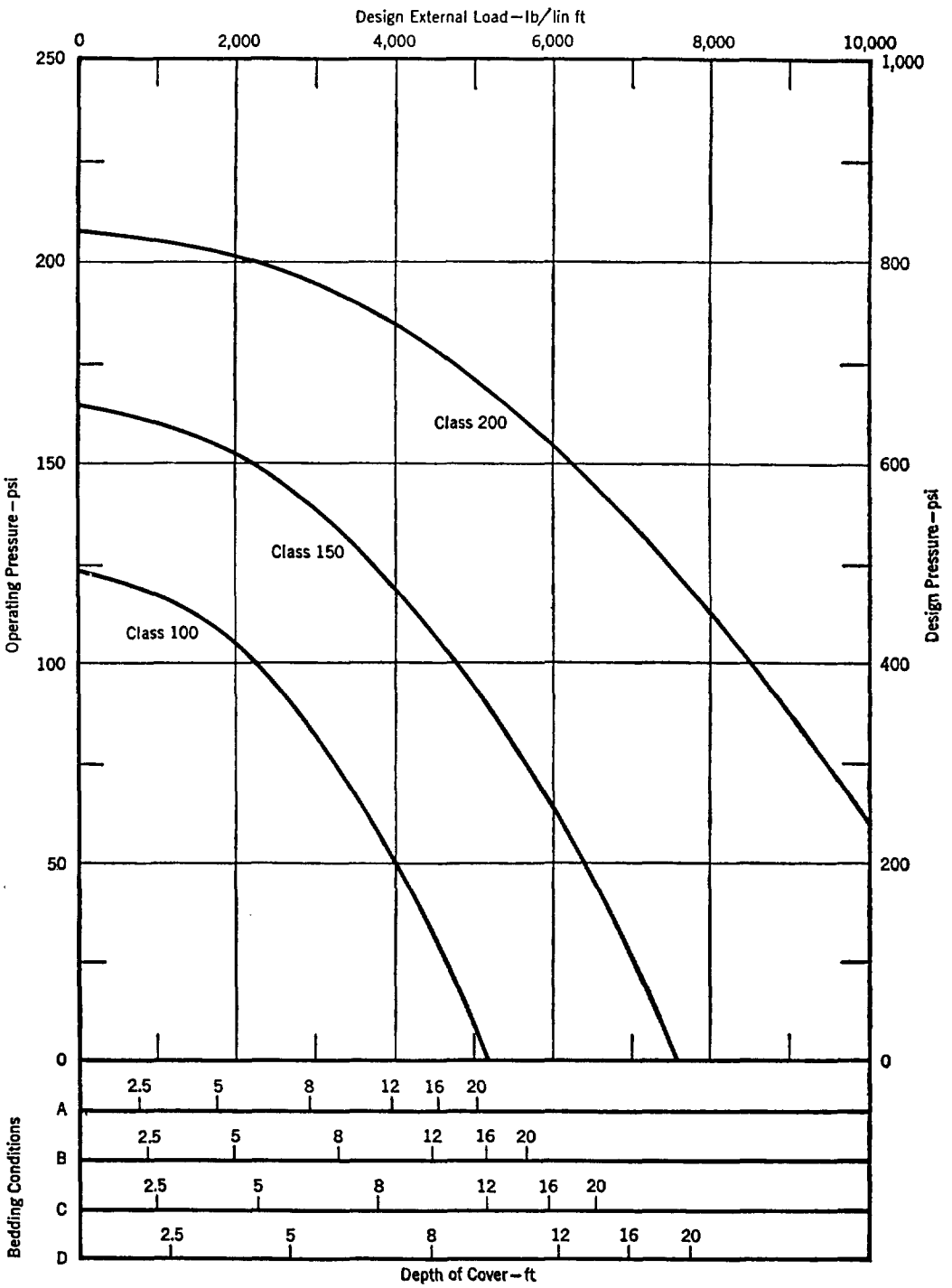

Fig. 11. Selection Curves for 12-in. Asbestos–Cement Pipe

CTD013373

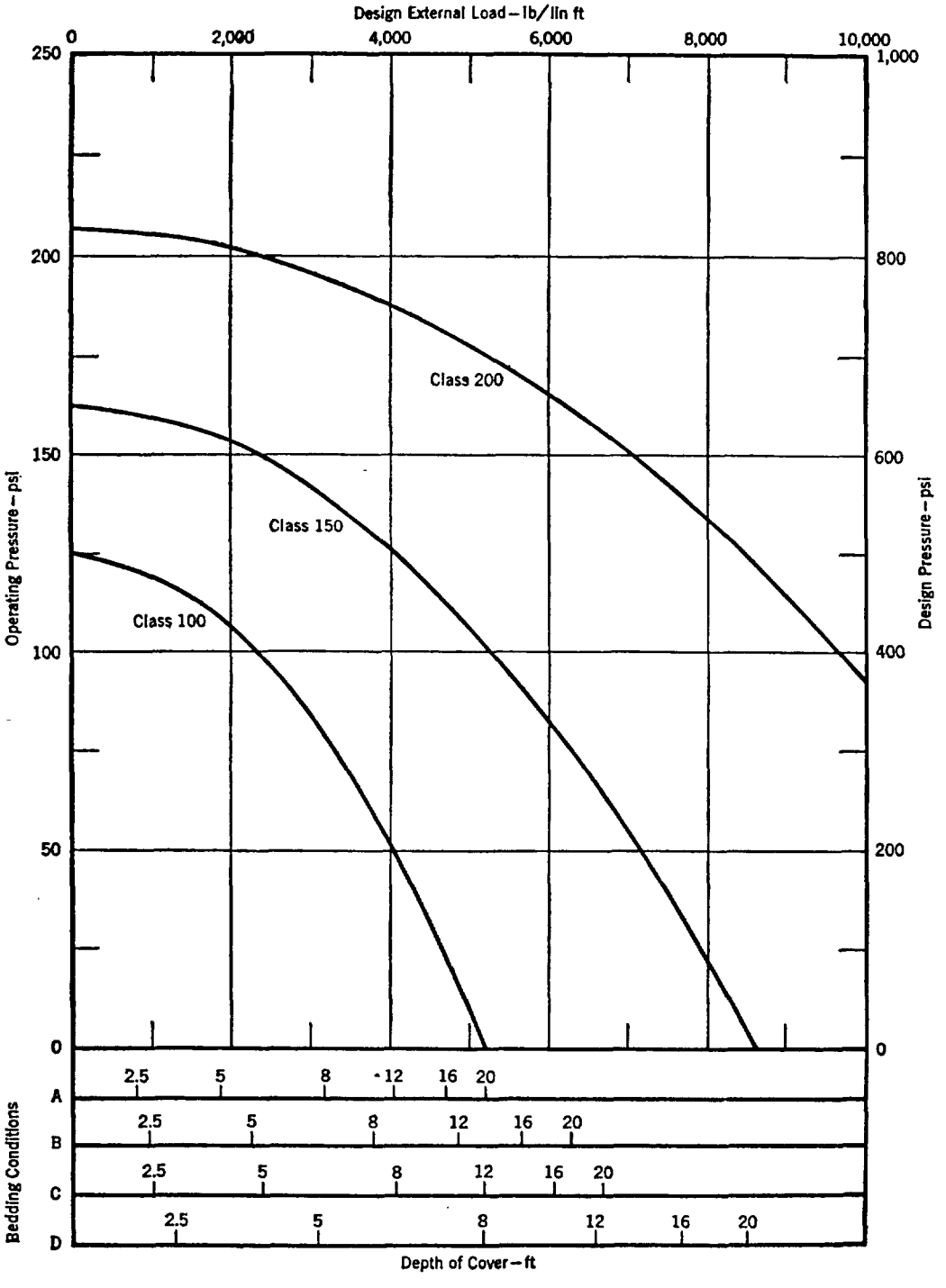

Fig. 12. Selection Curves for 14-in. Asbestos–Cement Pipe

CTD013374

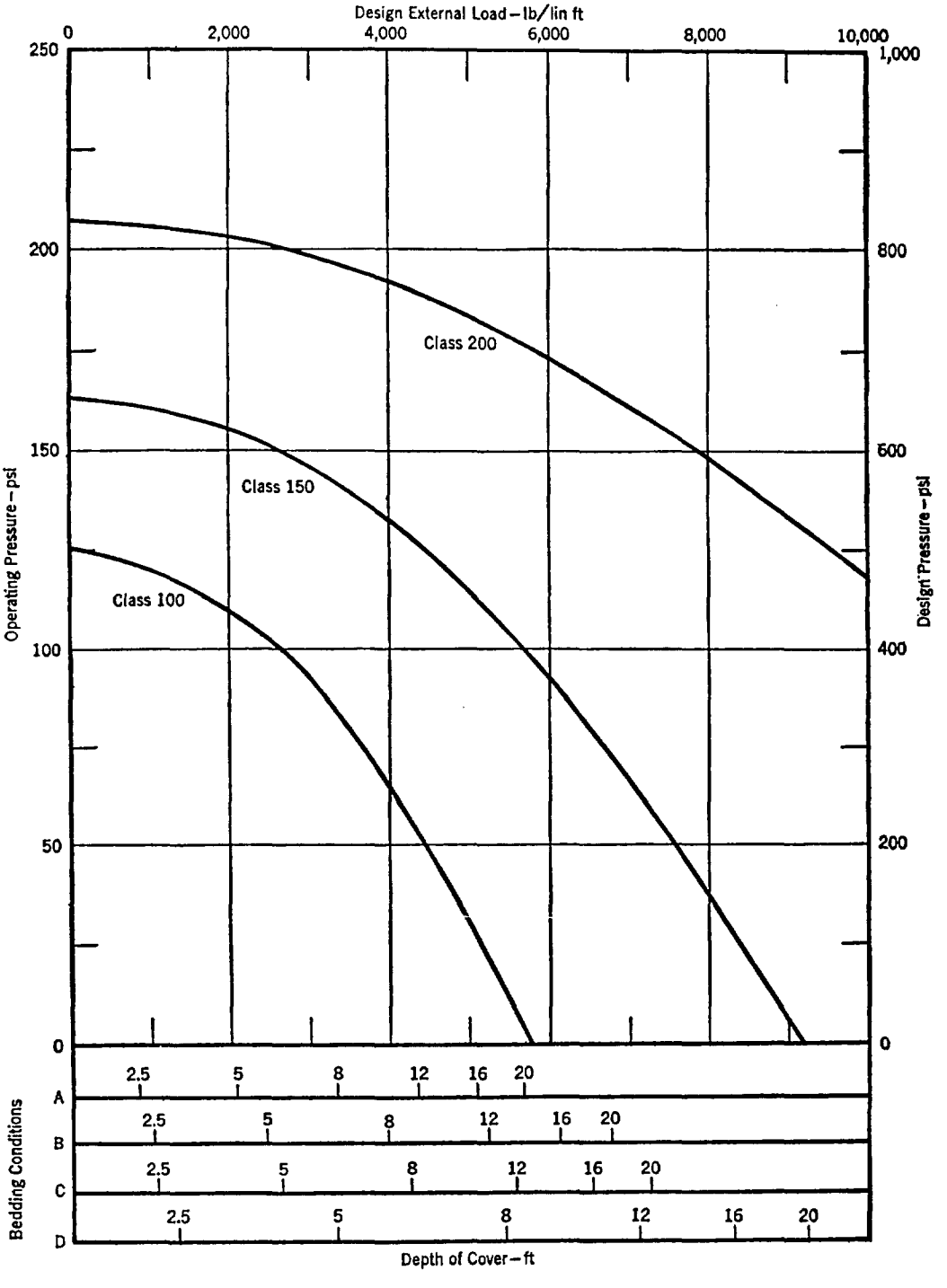

Fig. 13. Selection Curves for 16-in. Asbestos–Cement Pipe

CTD013375

Appendix

This appendix is for information only and is not a part of AWWA C401.

A1. General

Data developed for the preparation of the selection curves are included in this appendix. Figures illustrating the various bedding conditions and the earth load conditions used in the preparation of the selection curves are included.

A2. Tables

In Table A2 of design internal pressure and design external load intercepts, the external loads are the crushing loads that the pipe must be able to support without failure as specified in AWWA C400. The tables of design earth load w for various field bedding conditions and depths of cover show the calculated loads for Class 150 pipe. For Class 100 pipe, similar calculated loads would be less than those shown in the tables, and for Class 200 pipe, the loads would be greater. The maximum variation would be less than 5 per cent.

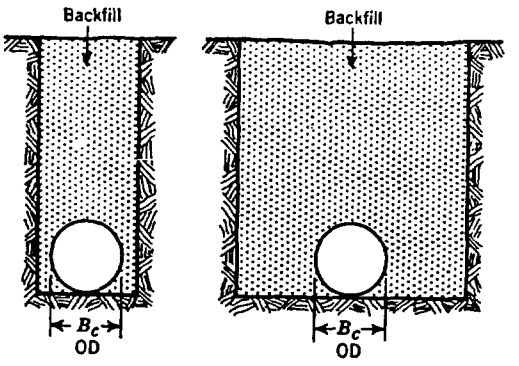

Fig. A1. Earth Load Conditions

The illustration on the left shows trench conduit conditions; that is, the trench width is less than two or three times B_c. *The illustration on the right shows a positive projecting conduit condition; that is, the trench width is greater than two or three times* B_c. *The shaded area represents backfill.*

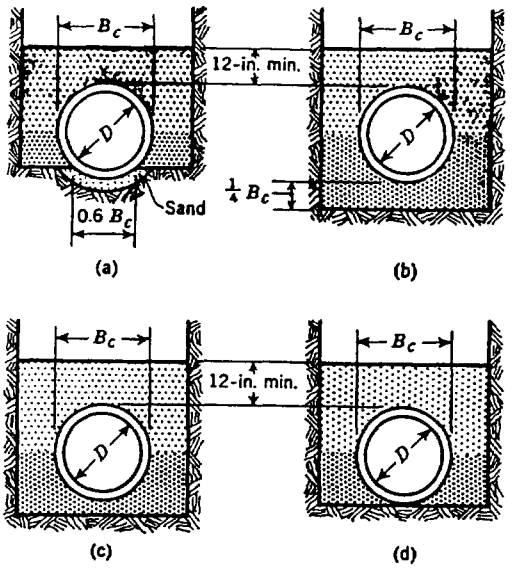

Fig. A2. Bedding Conditions Illustrated

Class A bedding conditions are shown in (a) and (b). Class C conditions are shown in (c) and (d). In all four diagrams, the lightly shaded area represents approved backfill, not frozen and free from lumps, large stones, boulders, or other unsuitable substances. The heavily shaded areas represent approved backfill, carefully compacted in 4-in. layers as specified by the engineer. In (a), a minimum of 2 in. of sand is placed in a shaped bottom under the pipe. In (b), the pipe is bedded in a gravel base. In (c), the pipe barrel rests on earth mounds and then the backfill between the earth mounds is compacted. In (d), the pipe barrel is resting on the flat bottom of the trench. Class B condition is the same as Class A, and Class D is the same as Class C except that the backfill is not tamped in B or D.

CTD013376

TABLE A1

Determination of Design Earth Load w *Applied in 3-Edge Bearing*

Pipe Size *in.*	1 External Load *lb*	2 Equivalent Three-Edge Bearing Load $\left(\frac{\text{Col. 1}}{\text{Load Factor}}\right)$	3 w Earth Load Applied in Three-Edge Bearing (Col. 2 × 2.5 Factor of Safety)	1 External Load *lb*	2 Equivalent Three-Edge Bearing Load $\left(\frac{\text{Col. 1}}{\text{Load Factor}}\right)$	3 w Earth Load Applied in Three-Edge Bearing (Col. 2 × 2.5 Factor of Safety)	1 External Load *lb*	2 Equivalent Three-Edge Bearing Load $\left(\frac{\text{Col. 1}}{\text{Load Factor}}\right)$	3 w Earth Load Applied in Three-Edge Bearing (Col. 2 × 2.5 Factor of Safety)
Class A Bedding Condition									
	2.5 ft of Cover			5 ft of Cover			8 ft of Cover		
4	219	129	323	458	269	673	744	438	1,095
6	297	175	438	634	373	933	1,041	612	1,530
8	371	218	545	814	479	1,198	1,344	790	1,975
10	450	264	660	1,012	595	1,488	1,688	993	2,483
12	507	298	745	1,174	691	1,728	1,975	1,162	2,905
14	559	311	778	1,336	742	1,855	2,267	1,259	3,148
16	604	335	838	1,484	825	2,063	2,398	1,332	3,330
	12 ft of Cover			16 ft of Cover			20 ft of Cover		
4	1,127	663	1,658	1,510	888	2,220	1,893	1,113	2,783
6	1,584	932	2,330	2,124	1,249	3,123	2,550	1,500	3,750
8	2,051	1,206	3,015	2,602	1,531	3,828	2,816	1,656	4,140
10	2,451	1,441	3,603	2,835	1,668	4,170	3,076	1,809	4,523
12	2,678	1,575	3,938	3,078	1,811	4,528	3,402	2,001	5,003
14	2,886	1,603	4,008	3,367	1,870	4,675	3,727	2,070	5,175
16	3,130	1,738	4,345	3,663	2,035	5,088	4,063	2,257	5,643
Class B Bedding Condition									
	2.5 ft of Cover			5 ft of Cover			8 ft of Cover		
4	219	146	365	458	305	763	744	496	1,240
6	297	198	495	634	423	1,058	1,041	694	1,735
8	371	248	620	814	542	1,355	1,344	896	2,240
10	450	300	750	1,012	674	1,685	1,688	1,126	2,815
12	507	338	845	1,174	783	1,958	1,975	1,317	3,293
14	559	373	933	1,336	890	2,225	2,267	1,512	3,780
16	604	402	1,005	1,484	989	2,473	2,398	1,598	3,995
	12 ft of Cover			16 ft of Cover			20 ft of Cover		
4	1,127	751	1,878	1,510	1,007	2,518	1,827	1,218	3,045
6	1,584	1,056	2,640	1,224	1,416	3,540	2,550	1,700	4,250
8	2,051	1,367	3,418	2,602	1,735	4,338	2,816	1,877	4,693
10	2,451	1,634	4,085	2,835	1,890	4,725	3,076	2,050	5,125
12	2,678	1,785	4,463	3,078	2,052	5,130	3,402	2,268	5,670
14	2,886	1,924	4,810	3,367	2,244	5,610	3,727	2,485	6,213
16	3,130	2,086	5,215	3,663	2,442	6,105	4,063	2,708	6,770

CTD013377

TABLE A1—*Determination of Design Earth Load* w *Applied in 3-Edge Bearing (contd.)*

Pipe Size in.	1 External Load lb	2 Equivalent Three-Edge Bearing Load (Col. 1 / Load Factor)	3 w Earth Load Applied in Three-Edge Bearing (Col. 2 × 2.5 Factor of Safety)	1 External Load lb	2 Equivalent Three-Edge Bearing Load (Col. 1 / Load Factor)	3 w Earth Load Applied in Three-Edge Bearing (Col. 2 × 2.5 Factor of Safety)	1 External Load lb	2 Equivalent Three-Edge Bearing Load (Col. 1 / Load Factor)	3 w Earth Load Applied in Three-Edge Bearing (Col. 2 × 2.5 Factor of Safety)
Class C Bedding Condition									
	2.5 ft of Cover			5 ft of Cover			8 ft of Cover		
4	219	168	420	458	352	880	744	573	1,433
6	297	228	570	634	488	1,220	1,041	801	2,003
8	371	286	715	814	626	1,565	1,344	1,034	2,585
10	450	346	865	1,012	778	1,945	1,688	1,299	3,248
12	507	390	975	1,174	903	2,258	1,975	1,519	3,798
14	559	400	1,000	1,336	954	2,385	2,267	1,619	4,048
16	604	431	1,078	1,484	1,060	2,650	2,398	1,712	4,280
	12 ft of Cover			16 ft of Cover			20 ft of Cover		
4	1,127	867	2,168	1,510	1,161	2,903	1,893	1,456	3,640
6	1,584	1,219	3,048	2,124	1,634	4,085	2,550	1,961	4,903
8	2,051	1,578	3,945	2,602	2,002	5,005	2,816	2,166	5,415
10	2,451	1,885	4,713	2,835	2,181	5,453	3,076	2,366	5,915
12	2,678	2,060	5,150	3,078	2,368	5,920	3,402	2,617	6,543
14	2,886	2,061	5,153	3,367	2,405	6,013	3,727	2,662	6,655
16	3,130	2,235	5,588	3,663	2,616	6,540	4,063	2,902	7,255
Class D Bedding Condition									
	2.5 ft of Cover			5 ft of Cover			8 ft of Cover		
4	219	199	498	458	416	1,040	744	677	1,693
6	297	270	675	634	577	1,443	1,041	946	2,365
8	371	338	845	814	740	1,850	1,344	1,221	3,053
10	450	409	1,023	1,012	920	2,300	1,688	1,535	3,838
12	507	461	1,153	1,174	1,068	2,670	1,975	1,795	4,488
14	559	509	1,273	1,336	1,214	3,035	2,267	2,061	5,153
16	604	549	1,373	1,484	1,349	3,373	2,398	2,180	5,450
	12 ft of Cover			16 ft of Cover			20 ft of Cover		
4	1,127	1,025	2,563	1,510	1,373	3,433	1,893	1,721	4,303
6	1,584	1,440	3,600	2,124	1,931	4,828	2,550	2,318	5,795
8	2,051	1,864	4,660	2,602	2,366	5,915	2,816	2,560	6,400
10	2,451	2,228	5,570	2,835	2,578	6,445	3,076	2,796	6,990
12	2,678	2,434	6,085	3,078	2,798	6,995	3,402	3,093	7,733
14	2,886	2,623	6 558	3,367	3,061	7,653	3,727	3,388	8,470
16	3,130	2,845	7,113	3,663	3,330	8,325	4,063	3,693	9,233

CTD013378

TABLE A2

Design Internal Pressure and Design Earth Load Intercepts for Use With Selection Curves

Pipe Size *in.*	Class 100		Class 150		Class 200	
	P psi	*W lb/lin ft*	*P psi*	*W lb/lin ft*	*P psi*	*W lb/lin ft*
4	417	4,100	616	5,400	809	8,700
6	441	4,000	632	5,400	815	9,000
8	472	4,000	653	5,500	824	9,300
10	490	4,400	650	7,000	826	11,000
12	490	5,200	658	7,600	830	11,800
14	500	5,200	650	8,600	826	13,500
16	500	5,800	654	9,200	825	15,400

2P—6M—5/78—43401

CTD013379