1975

PLAINTIFF'S EXHIBIT

GP-1744



SGP 0023377

ASSEMBLY


SGP 0023378

9.6/Ge

BASIC

1977

Gypsum Board

SGP 0023379

DT	Document Index	2
MR	Manufacturer Testing Facilities	4
UA	Uses, Applications, Limitations	4
PP	Product Presentation	5
OP	Overall Production Place	6-27
AI	Construction, Assembly, Installation	14-27
MF	Materials, Finishes	28-34
CS	Coatings, Surfaces	28-34
TC	Technical Support	35
CC	Code Acceptability, Certification	35
	Georgia-Pacific Distribution Centers Back Cover	36

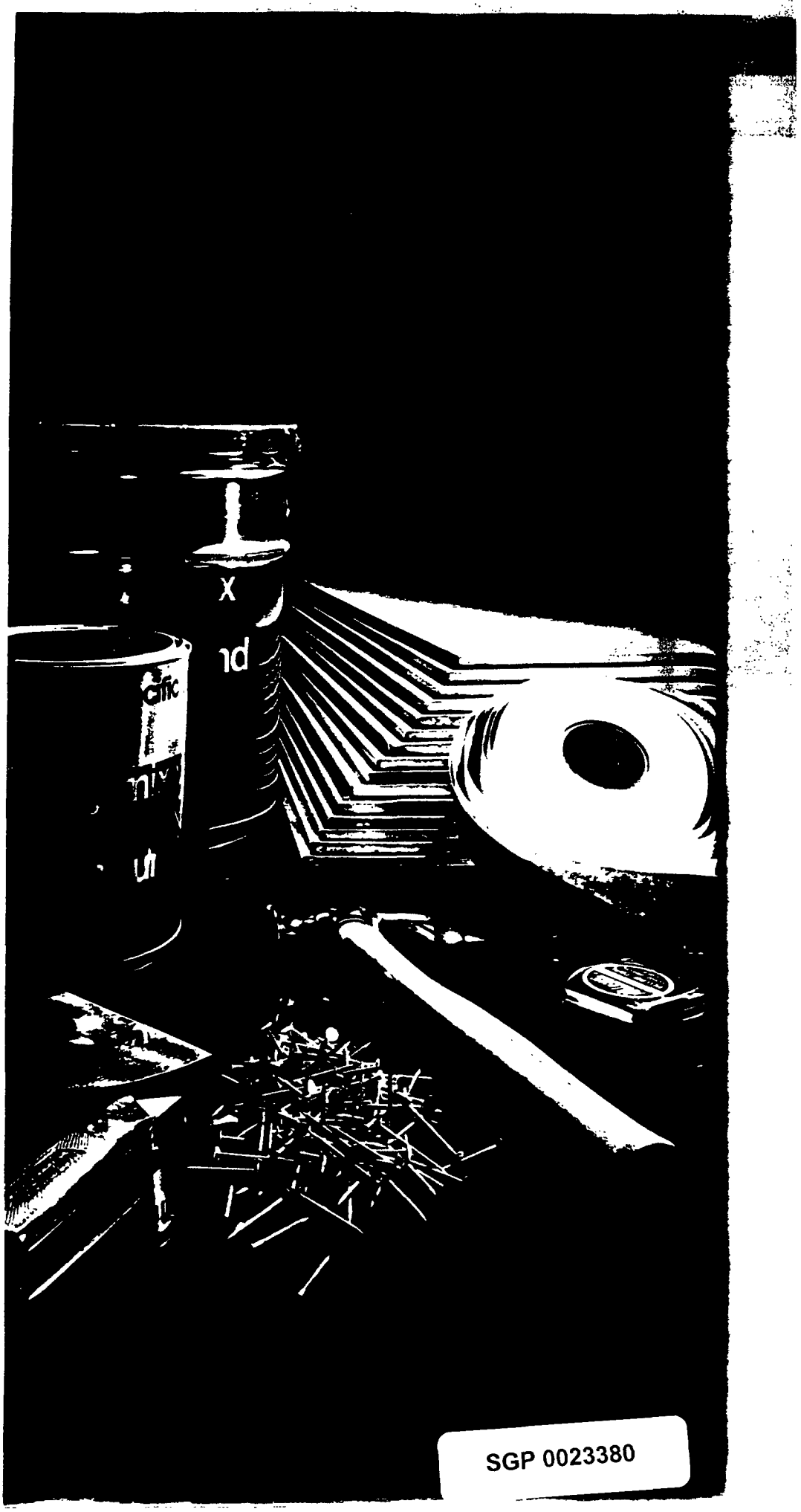



TESTING AND RESEARCH FACILITIES

Georgia-Pacific's Gypsum Product Development and Technical Service laboratory is located at Tigard, Oregon. This is where new products such as Predec® gypsum paneling, tile backer board, sound deadening board, Sentinel™ board, Denscote®, Denscal®, and Densite® plasters, and Firestop®, Speed Set asbestos free joint compounds and gypsum board had their beginnings. The G-P family of joint system products, the G-P sound control systems and the G-P fire rated systems, including the shaft wall systems, were also developed here. The increase in multi-family living has made fire safety and sound privacy of utmost importance.

The technical personnel at the Gypsum Lab also deal with quality and production problems. The effort to offer reliable products at the lowest possible cost is a never-ending task. Georgia-Pacific must be technically competent in these continually changing times in order to be able to furnish the products required by the construction industry.













MINING AND MANUFACTURING GYPSUM AND GYPSUM PRODUCTS



SGP 0023382

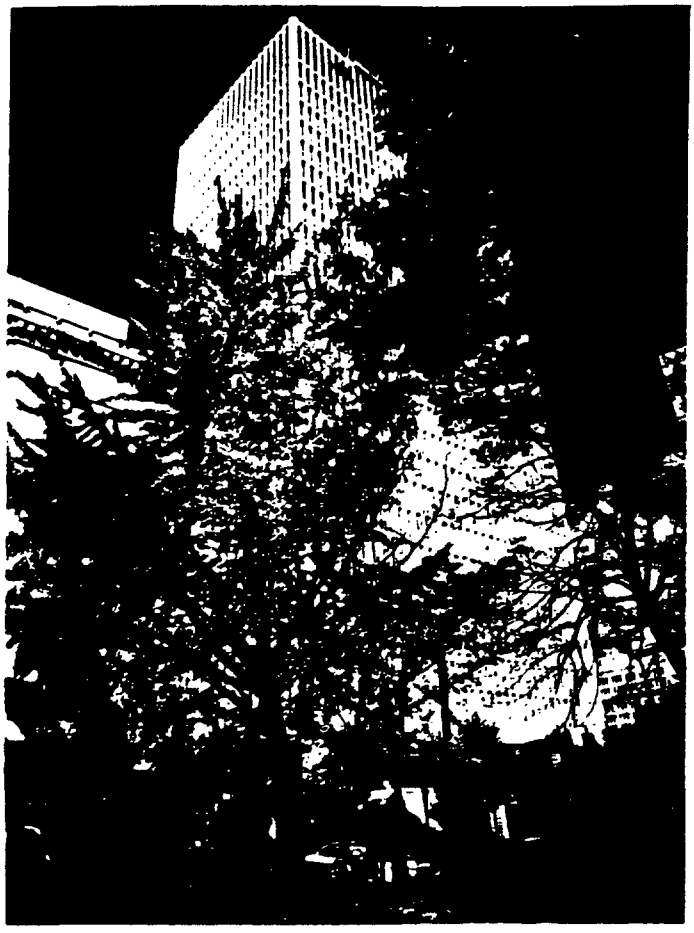

GEORGIA-PACIFIC
THE COMPANY

Georgia-Pacific began its history distributing lumber domestically and abroad from the South, then entered the fields of plywood manufacture and timber ownership and management. It believed in integrated manufacturing and each phase of using a tree's residue produced something new . . . lumber hardboard, particleboard, pulp, paper (fine papers, working papers, containers, tissues, food board, etc.), chemicals from paper residues, chemicals to help make wood products, chemicals for broad market sales, new kinds of plywood, recycling of wood and chemical materials, development of new and better trees, better timber management methods. Other resources include . . . gypsum (gypsum products), natural gas, metallurgical and other coal, oil, silica, ceramic clays and many other minerals. G-P is also a nationwide distribution system in every major market in the United States and Canada, and a transportation company with fleets of trucks and railcars to ensure good service with good products. Georgia-Pacific owns timber throughout the U.S. and in Brazil and Canada; timber rights in Indonesia and the Republic of the Philippines. It also manufactures wood products in Brazil, the Philippines and Indonesia, selling to both Asia and America. G-P is a highly decentralized company with over 33,500 employees working in 47 states, the District of Columbia and several foreign countries. Georgia-Pacific . . . The Growth Company.

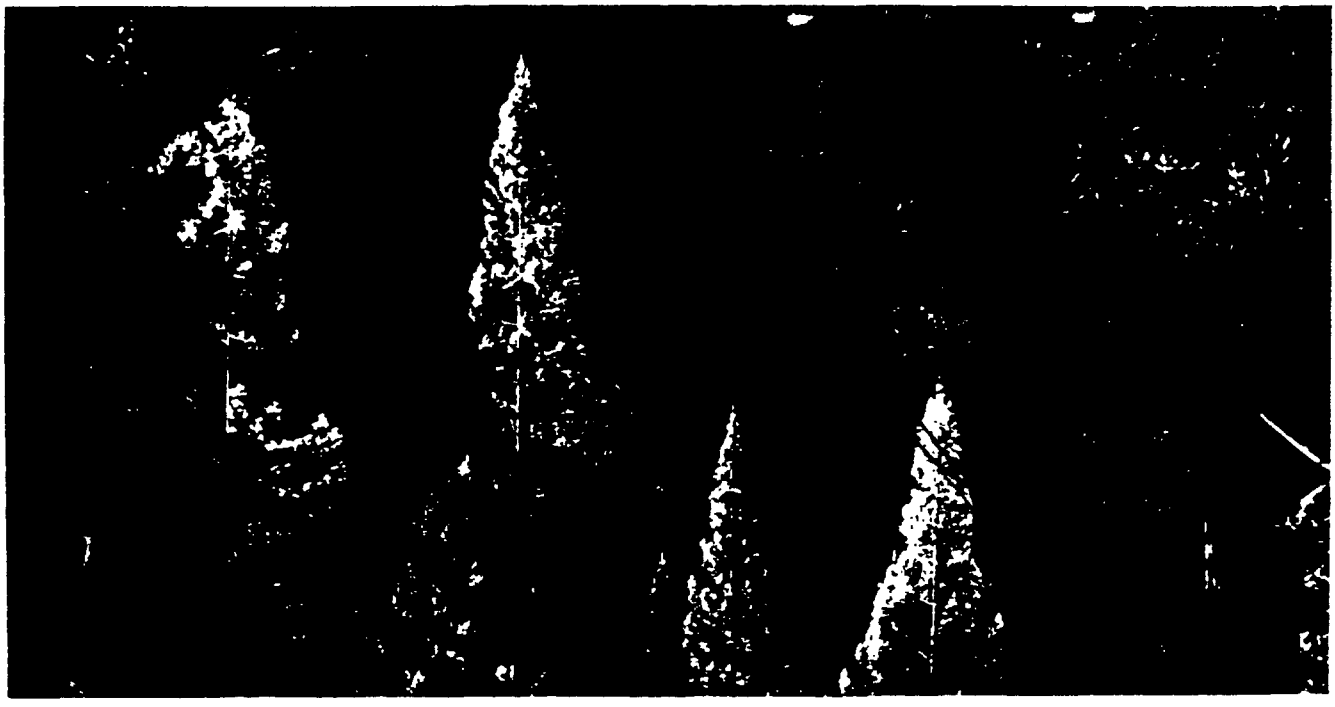

GYPSUM BOARD NAILS & SCREWS SELECTOR GUIDE

	Description	Applications
	1¼" GWB-54 Annular Ring Nail 12½ ga.; with a slight taper to a small fillet at shank. Bright finish; med. diamond pt.	½", ⅜" and ¼" Gypsum board, ½" and ⅜" Gypsum Backer Board to wood frame
	1⅜" Annular Ring Nail (Same as GWB-54 except for length)	⅜" Gypsum board to wood frame
	2½" 7d nail 13 ga., ¼" diamond head	⅜" Firestop® Gypsum board face layers over ½" Sound Deadening Board or 2 layers ⅜" Firestop to Wood Studs
	1⅞" 6d Nail 13 ga., ¼" diamond head	⅜" and ¼" Gypsum board over existing surface, wood frame
	1⅞" 6d Nail 13 ga., ¼" diamond head	⅝" Firestop Gypsum board to wood frame
	1⅝" 5d Nail 13½ ga., 15/64" diamond head	½" Firestop Gypsum board to wood frame
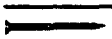	1⅛" Matching Color Head Nail (Steel)	Predecorated Gypsum board to wood frame over existing surface, wood frame
	1⅞" Matching Color Head Nail (Steel)	
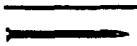	1⅜" Matching Color Head Nail (Brass)	Predecorated Gypsum board (colors) to wood frame
Gypsum board to Metal Framing 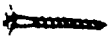	1" Gypsum board Screw Type S	Single Layer Gypsum board to 25 Gauge Steel Studs. Gypsum board to Resilient Channel. Gypsum board to Metal Furring.
	1¼" Gypsum board Screw Type S 1⅝" Gypsum board Screw Type S	1" core units to L Runner in 2" Solid and Semi-Solid Partition Systems
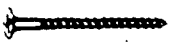	1⅝" Gypsum board Screw Type S	Double-Layer Gypsum board to 25 gauge Steel Studs Double-Layer Gypsum board to Metal Furring.
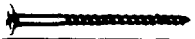	1⅞" Gypsum board Screw Type S	Double-Layer Gypsum board
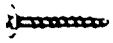	1" Gypsum board Screw Type S-12 Also available in ¾", 1⅛" and 1⅝6" lengths	For single or multi-layer application of Gypsum board to heavy gauge steel (up to 12 gauge).
Gypsum board to Wood Framing 	1¼" Gypsum board Screw Type W	Single Layer Gypsum board to Wood Framing.
Gypsum board to Gypsum Ribs 	1½" Gypsum board Screw Type G 1⅝" Gypsum board Screw Type G	Gypsum board to Gypsum Ribs in Semi-Solid Partition Systems.
Wood Trim to Metal Framing 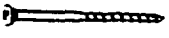	1⅝" Gypsum board Screw Type S Trim Head 2¼" Gypsum board Screw Type S Trim Head	Wood trim over single layer of Gypsum board on 25 gauge Steel Studs Wood trim over double layer Gypsum board on 25 gauge Steel Studs
Metal Studs to Door Frames and Runners 	⅜" Gypsum board Screw S-12 Pan-Head	Metal Door frame to 12 gauge (max.) Steel Studs Metal Studs to Metal Runners
Metal Trim & Door Hinges to Metal Framing 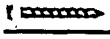	⅞" Type S-18 Oval Head Also available in ¾", 1⅛" & 1⅝6" lengths	Door hinges to door frame and aluminum components to metal.

Horizontal and Vertical Application: TYPE S—Metal studs or furring spaced 24" on center. Screws should be spaced 12" on center unless otherwise noted in the detailed assemblies shown in Georgia-Pacific literature.

TYPE G—Laminated systems and other gypsum to gypsum applications.

TYPE W—Wood studs 16" or 24" on center. Screws should be spaced 12" on center unless otherwise noted in the detailed assemblies shown in G-P literature.

Selection of the proper nail for each application is extremely important, particularly for fire-rated construction. The nails recommended comply with performance standards adopted by the Gypsum Association.

G-P GYPSUM BOARD OR *DENS-COTE*® VENEER PLASTER SYSTEMS.

The following tables are summaries only, based on tests at Underwriters' Lab., National Bureau of Standards, Univ. of Calif., Ohio State Univ., Geiger and Hamme, Riverbank Lab. and/or Ohio Research Corp. sponsored by the G-P Gypsum Division, Gypsum Association, or others. Fire rating, weight, and sound characteristics are based on a combination of specific details as tested and published. Where carpet and pad is used in sound tests, carpet is 44 oz. and pad 40 oz. weights. All systems are ranked by STC number in each category. Fire tests conducted according to ASTM E119. Sound tests conducted according to ASTM E90.

COST COMPARISON INDEX: For wood and gypsum partitions, 100 is for 2x4 studs, 16" o.c., ½" Regular Gypsum board each side. For metal stud partitions, 100 is for 2½" studs, 24" o.c., ⅝" Firestop each side. Other assemblies are rated against those two. Allow for local differences in labor and material costs.

FIRE HAZARD (FLAME SPREAD) CLASSIFICATION: Official Underwriters' Tests. ½" and ⅝" Firestop, 10-15 (Labeled); ⅜", ½" and ⅝" G-P, 10-15 (Not Labeled). More complete listings and details are available. Tests conducted according to ASTM E84.
Inconsistencies in test results are due to tests over a period of many years and variations in laboratory facilities.

1. STC under sound characteristics is Sound Transmission Class
2. Official Underwriters' Tests have proven joint finishing is not required for the rating in assemblies of Firestop under certain conditions.
3. Under "Building Code Approvals" (A) refers to International Conference of Building Officials, (B) refers to Southern Building Code Congress; (C) refers to Building Officials Conference of America. Additional approvals requested. Check with local building officials for verification of approvals as may be required.
4. Not all code jurisdictions belong to Model Code Groups. Therefore we advise consultation with local building officials if acceptance of these test results are in doubt.

Combustible Assemblies—For all 45 minute and 1 hour ratings ⅝" structural interior plywood or particleboard underlayment grade, over building paper, over ½" structural interior plywood with exterior glue CD grade may be used over the wood joists with ceilings as detailed.

Noncombustible Assemblies—Ceilings for all 1 hour, 1½ hour and 2 hour noncombustible floor and ceiling construction assemblies with 2" or 2½" concrete floor on metal lath over steel bar joists, unless otherwise specified, may be directly attached or suspended.

Firestop is listed by Underwriters for U.S.A. and Canada and carries the UL Label for 45 minutes, 1, 2 and 3 hour Fire Resistance in various designs and with a Fire Hazard Classification of Flame spread 15, fuel contributed 15, smoke developed 0.

SOUND CHARACTERISTICS—References: Geiger and Hamme, Inc.; Riverbank Labs; Kodaras. More complete listings and details are available. Inconsistencies in test results are due to tests over a period of many years and variations in laboratory facilities. All sound rated assemblies require caulking top and bottom, and other locations where sound leaks may develop.

GYPSUM BOARD "R" FACTORS

⅜"	.33	1"	.87
½"	.45	½" insulating	2.80 (walls)
⅝"	.56		

SGP 0023384

TECHNICAL DATA

WALLS AND COLUMN CONSTRUCTION

G-P GYPSUM BOARD OR DENS-COTE* VENEER PLASTER SYSTEM

	Fire Resist.		Sound Trans.				Construction		References	
G-P Syst. #	Rating	Test Refer.	STC	Test Refer.	Cost Comparison Index	Part. Thickness	Weight per Sq. Ft.	Wall Surface	Bldg. Code App	Detail Info Page
WOOD PARTITIONS (STUDS—2 x 4, 16" O.C.)										
080	20 min.	EST	31	EST	90	4¼"	5.2	⅜" Gypsum board Both Sides	—	—
082	30 min.	EST	32	EST	100	4¼"	5.9	½" G-P Gypsum board Both Sides	ABC	—
084	45 min.	U. 317	32	EST	110	4½"	5.9	½" Firestop® Both Sides	BC	—
086	1 hr.	U. 305 (U.L. 5)	34	OR-64-8	115	4¾"	7.0	⅝" Firestop* Both Sides Basic 1 Hr. Fire Rated Wall	ABC	14
087	1 hr.	U. 305 (U.L. 5)	34	OR-64-8	125	4¾"	7.0	⅝" G-P Tile Backer Board Both Sides	ABC	—
092	1½ hr.	EST	37	CR-64-11	135	5¼"	9.5	⅝" Firestop, 1 Layer, One Side, 2 Layers Other Side	—	—
094	1 hr.	G.A.	38	EST	135	4⅞"	8.2	⅜" G-P Gypsum board, 2 Layers, Both Sides	A	—
096	1½ hr.	G.A.	39	NBS	140	5⅜"	9.9	½" G-P Gypsum board, 2 Layers, Both Sides	C	—
098	2 hrs.	T-194	41	OR-64-12	160	5⅞"	12.0	⅝" Firestop, 2 Layers, Both Sides	ABC	14
WOOD PARTITIONS/GYPSUM SOUND DEADENING BOARD (STUDS—2 x 4, 16" O.C.)										
100	1 hr.	U. 312 (U.L. 30)	45	BW-27-FT	145	4⅞"	7.96	½" Firestop, 1 Layer Strip Laminated Over ¼" Gypsum Sound Deadening Board, 2 Sides	ABC	14
102	1 hr.	U. 312 (U.L. 30)	47	BW-28-ST	160	5¼"	8.3	⅝" Firestop, 1 Layer Laminated over ¼" Gypsum Sound Deadening Board, Both Sides	ABC	15
104	1 hr.	EST	47	BW-29-ST	175	6⅞"	8.79	½" Firestop, 1 Layer over ¼" Sound Deadening Board, Both Sides Laminated, Staggered Studs	—	—
106	1 hr.	U. 312 (U.L. 30)	50	BW-35-ST	175	5⅛"	8.7	⅝" Firestop, 1 Layer Strip Laminated over ¼" Gypsum Sound Deadening Board, 2 Sides, 2" Insulation	ABC	15
105	1 hr.	EST	52	BW-30-ST	190	6⅞"	8.92	½" Firestop, 1 Layer over ¼" Gypsum Sound Deadening Board, 2 Sides, 2" Insulation, Staggered Studs	—	—

See Page 6 for Notes

*Firestop is a registered trademark of Georgia-Pacific Corporation

G-P Syst. #	Fire Resist. Rating	Fire Resist. Test* Refer.	Sound Trans. STC	Sound Trans. Test Refer.	Cost Comparison Index	Part. Thick-ness	Weight per Sq. Ft.	Construction Wall Surface	References Bldg. Code App	References Detail Info Page
WOOD STUDS/RESILIENT CHANNELS										
112	1 hr.	T-3127	44	OR-64-7	135	5⅛"	6.3	⅝" Firestop®, 1 Layer Nailed 1 Side, 1 Layer on Resilient furring other side	ABC	16
114	1½ hr.	EST	48	OR-64-15	155	5¾"	8.8	⅝" Firestop, 2 Layer 1 Side, 1 Layer on Resilient furring other side	—	16
WOOD STUDS/RESILIENT CHANNELS/INSULATING BLANKETS										
116	1 hr.	T-3127	50	OR-64-16	150	5⅛"	6.4	⅝" Firestop, 1 Layer Nailed 1 Side, 1 Layer on Resilient furring other side, plus fiberglass insulation in stud space	ABC	16
STAGGERED STUD WALLS										
150	1½ hr.	EST	43	EST	175	7⅝"	11.0	½" G-P Regular, 2 layers, Both Sides	—	—
152	2 hrs.	EST	47	TL-69-210	190	8⅛"	12.7	⅝" Firestop, 2 layers, Both Sides	ABC	—
154	1 hr.	Based on U. 305 (U.L. 5)	48	EST	140	6⅞"	7. 0	⅝" Firestop, 1 layer each side, 2x6 plate, 2" insulation	ABC	—
DOUBLE WOOD STUDS										
108	1 hr.	EST	50	BW-31-ST	225	10"	9.14	½" Firestop, 1 Layer Laminated over ¼" Gypsum Sound Deadening Board, Both Sides, Double Studs	ABC	—
109	1 hr.	EST	55	BW-32-ST	240	10"	9.29	½" Firestop, 1 Layer Laminated over ¼" Gypsum Sound Deadening Board, 2 Sides, 2" Insulation, Double Studs	—	15
170	1 hr.	EST	46	EST	215	9¼"	7.5	⅝" Firestop, 1 layer each side double row of studs 1" apart on separate 2x4 plates, insulation in stud space	—	—
175	2 hrs.	WP297 FM	57	RAL	—	11½"	—	½" Firestop Gypsum board. 2 layers face each side of wall, 1 layer attached to eacn stud inside, with 1" space between inside layers Lot Line Wall	—	17
WOOD STUDS/FIBER SOUND BOARD										
118	1 hr.	T-3006	46	OR-64-73	165	5⅝"	8.5	⅝" Firestop, 1 layer over ½" Fiber Sound Deadening Board, Both Sides	ABC	17

See Page 6 for Notes

*Firestop is a registered trademark of Georgia-Pacific Corporation.

SGP 0023386

G-P Syst. #	Fire Resist. Rating	Fire Resist. Test Refer.	Sound Trans. STC	Sound Trans. Test Refer.	Cost Comparison Index	Part. Thickness	Weight per Sq. Ft.	Construction Wall Surface	References Bldg. Code App	References Detail Info Page
EXTERIOR WALLS										
500	2 hrs.	U302 (U.L. 23)	50	EST	—	5⅜"	—	⅝" Firestop® 2 layers interior; ½" Gypsum Sheathing, Brick Exterior	ABC	—
501	1 hr.	U305 (U.L. 5)	—	—	—	4¾" plus siding	—	⅝" Firestop (Interior), ⅝" Firestop Tile Backer or ⅝" Firestop Gypsum Sheathing (Exterior) Wood Siding	—	
SOLID GYPSUM BOARD PARTITIONS (NON-LOADBEARING)										
230	2 hrs.	G.A.	36	G.A.	90	2"	8.1	½" Firestop, 1 Layer Each Side, 1" Coreboard, height limit 9 ft. based on L/120, 5 lbs. PSF	ABC	17
232	2 hrs.	G.A.	36	G.A.	95	2"	8.1	½" G-P Gypsum board, 1 Layer Each Side, 1" Laminated Coreboard, height limit 9 ft. based on L/120, 5 lbs. PSF	ABC	—
234	2 hrs.	EST	37	G.A.	100	2¼"	9.1	⅝" Firestop, 1 Layer Each Side, 1" Coreboard	—	—
SHAFT LINER™ SYSTEMS										
206	2 hrs.	T-4958	—	—	—	2⅝"	10.5	G-P 1⅝" core unit plus two face layer ½" G-P regular screw-laminated, track and vertical "T" splines	—	—
208	2 hrs. Chase Wall	T-4991	—	—	—	7¾"	9.0	G-P 1⅝" core unit, angle runners, 2½" metal studs, one facing layer of ⅝" Firestop screwed to studs	—	—
210	1½ hr.	T-4982	—	—	—	2¼"	8.4	G-P 1⅝" core unit, plus face layer ⅝" Firestop screw-laminated. Track and vertical "T" splines on 24" centers	—	—
METAL STUDS / 24" O.C. / INSULATING BLANKETS										
328	1 hr.	T-5316	41	OR-66-5	110	3½"	4.3	½" Firestop®, 1 layer each side, 2½" fiberglass insul. in stud space, 2½" studs.	—	18
300	1 hr.	T-2316	44	OR-64-81	115	2⅞"	5.0	⅝" Firestop, plus 2" fiberglass insul. in stud space, 1⅝" studs	ABC	18
316	1 hr.	T-4848	48	OR-66-6	125	5⅛"	7.0	½" Firestop, 1 layer 1 side, ½" regular G-P Gypsum board, 2 layers other side (insulation in cavity for STC), 3⅝" studs	—	20
330	1 hr.	T-2316	48	OR-64-80	145	3⅜"	7.2	⅝" Firestop, 1 layer 1 side, 2 layers other side, 2" fiberglass insul. in stud space, 1⅝" studs	ABC	—
334	1 hr.	EST	48	OR-66-6	130	4"	6.3	½" Firestop, 1 layer 1 side, 2 layers other side plus 2" fiberglass insul. in stud space, 2½" studs	—	—

See Page 6 for Notes

	Fire Resist.		Sound Trans.					Construction	References	
G-P Syst. #	Rating	Test Refer.	STC	Test Refer.	Cost Comparison Index	Part. Thickness	Weight per Sq. Ft.	Wall Surface	Bldg. Code App	Detail Info Page
METAL STUDS / 24" O.C. / INSULATING BLANKETS										
310	2 hrs.	T-3218	48	BW-12-FT	155	4½"	8.0	½" Firestop, 2 layers each side, STC based on 2" insul. in stud space, 2½" studs	ABC	20
318	1½ hrs.	T-3126	50	OR-64-51	150	5½"	8.0	⅝" Firestop, 1 layer 1 side, 2 layers other side plus 3" fiberglass insul. in stud space, 3⅝" studs	—	21
324	2 hrs.	T-2557	52	OR-64-50	170	6⅛"	11.1	⅝" Firestop, 2 layers both sides plus 2" fiberglass in stud space, 3⅝" studs	ABC	22
METAL STUDS / 24" O.C. / GYPSUM SOUND DEADENING BOARD										
304	1 hr.	U410 (U.L. 32))	45	BW-16-FT	130	4"	7.0	½" Firestop, 1 layer, laminated over ¼" S.D. Board, both sides screw attached, 2½" studs	ABC	19
306	1 hr.	U410 (U.L. 32))	50	BW-17-FT	140	4"	7.1	½" Firestop, both sides, 1 layer, laminated to ¼" S.D. Board, screw attached, 2" fiberglass friction fit in stud space, 2½" studs	ABC	19
308	1 hr.	U410 (U.L. 32))	54	BW-18-FT	145	4½"	8.1	⅝" Firestop, both sides, 1 layer laminated to ¼" S.D. Board, screw attached, 2" fiberglass friction fit in stud space, 2½" studs	ABC	19
METAL STUDS / 24" O.C. / FIBER SOUND DEADENING BOARDS										
320	1 hr.	EST	44	OR-65-10	125	5⅜"	5.8	⅝" Firestop, 1 layer 1 side, other side, 1 layer over ½" fiber S.D. Board, 3⅝" studs	—	21
336	1 hr.	EST	49	OR-65-11	135	5⅞"	—	⅝" Firestop, 1 layer over ½" fiber S.D. Board, both sides 3⅝" studs	—	—
STEEL STUD CHASE WALL (1⅝" METAL STUDS 24" O.C.—6" x 12"—GYPSUM BOARD OR METAL TRACK SPACERS)										
326	1 hr.	EST	47	BW-33ST	—	7½"	6.7	½" Firestop, 1 layer laminated over ¼" S.D. Board, both sides	ABC	22
327	1 hr.	EST	52	BW-34ST	—	7½"	6.9	½" Firestop, 1 layer laminated over ¼" S.D. Board both sides, plus 2" insul. in stud space	ABC	—
—	1 hr.	UL U 420 (GA)	52	TL 76-155	—	—	—	⅝" Firestop each side, 3½" insulation in cavity, studs 9½" apart. Option of 25 ga. runners as spacers.	ABC	—
—	2 hr.	UL U 420 (GA)	57	TL 76-156	—	—	—	2 layers ⅝" Firestop each side, 3½" insulation in cavity, studs 9½" apart Option of 25 ga. runners as spacers.	ABC	—
—	2 hr.	UL U 420 (GA)	52	TL-76-162	—	—	—	2 layers ⅝" Firestop each side Studs 9½" apart Option of 25 ga. runners as spacers.	ABC	—

See Page 6 for Notes

G-P Syst. #	Fire Resist. Rating	Fire Resist. Test Refer.	Sound Trans. STC	Sound Trans. Test Refer.	Cost Comparison Index	Part. Thickness	Weight per Sq. Ft.	Construction Wall Surface	References Bldg. Code App	References Detail Info Page
METAL STUD PARTITIONS 24" O.C.										
340	35 min.	EST	35	OR-65-2	90	3½"	—	½" G-P Gypsum board, 1 layer each side, 2½" studs	—	—
302	1 hr.	T-2316	35	TL-62-72	95	2⅞"	5.2	⅝" Firestop®, 1 layer each side, 1⅝" studs	ABC	18
342	1 hr.	T-2898	35	OR-64-65	130	3¾"	—	⅝" Firestop, Eternawall™, 1 layer each side, 2½" studs	ABC	—
344	1 hr.	T-2069	39	OR-63-1	100	3¾"	—	⅝" Firestop, 1 layer each side, 2½" studs	ABC	—
346	1 hr.	T-2016	42	OR-63-11	105	4⅝"	6.0	⅝" Firestop, 1 layer each side, 3⅝" studs	ABC	—
312	1½ hr.	EST	43	OR-63-2	135	4⅜"	7.5	⅝" Firestop, 1 layer 1 side, 2 layers other side, 2½" studs	—	20
313	1½ hr.	EST	43	OR-64-32	140	5½"	8.0	⅝" Firestop, 1 layer 1 side, 2 layers other side, 3⅝" studs	—	—
314	2 hr.	T-2557	46	EST	150	5"	10.4	⅝" Firestop, 2 layers, 2 sides, 2½" studs	ABC	20
322	2 hr.	T-2557	47	OR-64-52	—	6⅛"	11.0	⅝" Firestop, 2 layers, 2 sides, 3⅝" studs	ABC	21
350	2 hr.	T-2406	47	EST	—	6⅛"	10.4	⅝" Firestop, 2 layers, 2 sides (face layer—Eternawall), 3⅝" studs	ABC	—
STEEL COLUMN FIREPROOFING										
—	1 hr.	G.A.	—	—	—	—	—	½" G-P Gypsum board, 2 layers	—	—
—	1 hr.	EST	—	—	—	—	—	⅝" Firestop, 1 layer	AB	—
—	1½ hr.	G.A.	—	—	—	—	—	½" G-P Gypsum board, 3 layers	—	—
—	2 hr.	X520 (U.L. 20)	—	—	—	—	—	½" Firestop, 1 layer	—	—
—	2 hr.	X517 (U.L. 8)	—	—	—	—	—	⅝" Firestop, 2 layers	ABC	—
—	3 hr.	X513 (U.L. 39)	—	—	—	—	—	½" Firestop, 2 layers	—	—
—	3 hr.	X509 (U.L. 18)	—	—	—	—	—	⅝" Firestop, 3 layers	ABC	—
—	4 hr.	X501 (U.L. 26)	—	—	—	—	—	⅝" Firestop, 4 layers	ABC	—

See Page 6 for Notes

G-P Syst. #		Weight Lb./ Sq. Ft.	Sound Rating		Fire Resistance		Bldg. Code App.	Detail Info Page
			Rating	Test Ref.	Rating	Test Ref.*		
WOOD JOISTS 16" O.C. FINISHED FLOOR ON ROUGH SUBFLOOR, EXCEPT AS NOTED								
400	3/8" G-P Regular, 1 layer nailed	—	—	—	15 min.	—	ABC	—
401	1/2" G-P Regular, 1 layer nailed	11.4	—	—	25 min.	—	ABC	—
402	1/2" Firestop®, 1 layer applied to metal furring channel 16" o.c. with 1" x 6" T. & G. subflooring, 1 layer of resin building paper, and 1" x 4" T. & G. finished flooring, or 2 layers plywood	—	STC 47 IIC 39	TL64-155	1 hr.	L502 (UL-33)	ABC	22
403	1/2" Firestop, 1 layer nailed.	11.4	—	—	45 min.	U.L. No. 1	AB	—
404	5/8" Firestop attached to resilient metal furring 24" o.c. with 5/8" plywood subfloor and carpet and pad	—	STC 48/ IIC 68	L-224-3 & 4	1 hr.	EST.	ABC	23
405	5/8" Firestop, 1 layer nailed, 1 layer 1" x 6" or plywood subfloor, 1 layer 1" x 4" or plywood finish floor	12.0	STC, 38, IIC 34 (EST.)		1 hr.	L501 (U.L. No. 1)	AB	—
406	5/8" Firestop, 1 layer attached to 2" x 8" joists 16" o.c. and 2" x 4" joists 16" o.c. 1/2" plywood subfloor attached to 2" x 8" joists 16" o.c. with rug and pad, 3" insulation in cavity	—	STC 51/ IIC 79	KAL-224-14 + 15	1 hr.	—	—	23
407	5/8" Firestop, 1 layer nailed; 2nd layer 5/8" Firestop applied to resilient furring channel 24" o.c. between layers	16.0	—	—	2 hr.	L505 (U.L. No. 217)	ABC	—
408	5/8" Firestop, nailed, 1 5/8" lightweight concrete 5/8" plywood, wood joists, 16" o.c. insulation, resilient furring, carpet and pad	—	STC 53/ IIC 73	L-224-27 & 28	1 hr.	EST.	A	—
409	1/2" Firestop, 1 layer nailed, 1" x 6" T.&G. or plywood subfloor, 1" x 4" or plywood finish floor	13.0	STC 35 IIC 32	G.A.	1 hr.	L503 (U.L. No. 46)	ABC	—
411	3/8" G-P Regular, 2 layers nailed	—	—	—	30 min.	EST.	—	—
413	1/2" G-P Regular, 2 layers nailed	—	—	—	1 hr.	EST.	—	—
415	1/2" Firestop, 1 layer, laminated and nailed to 1/4" G-P Gypsum Sound Deadening Board, with floor of 5/8" CD plywood, 1/2" particleboard underlayment carpet and pad	—	STC 41/ IIC 75	BW-2MT	1 hr.	EST	A	22
417	5/8" Firestop, 1 layer laminated and nailed to 1/4" G-P Gypsum Sound Deadening Board with floor 5/8" CD plywood, 1/2" particleboard underlayment, carpet and pad	—	STC 42/ IIC 75	(EST.)	1 hr.	EST.	ABC	—
420	1/2" Firestop, 1 layer screwed to resilient channel 24" o.c., 5/8" plywood subfloor with 3/8" particleboard over wood joists 16" o.c., 3" insulation, carpet and pad	—	STC 53/ IIC 72	OC 3-MT	1 hr.	FC 181 (FM)	—	23
422	5/8" Firestop, nailed 1 5/8" lightweight concrete, 5/8" plywood, wood joists 16" o.c., insulation, carpet and pad	—	STC 47/ IIC 65	L-224-29 & 30	1 hr.	EST.	A	—

See page 6 for Notes.

SGP 0023390

G-P Syst. #		Weight Lb./ Sq. Ft.	Sound Rating		Fire Resistance		Bldg. Code App.	Detail Info Page
			Rating	Test Ref.	Rating	Test Ref.*		
WOOD JOISTS 24" O.C.								
475	5/8" Firestop, 1 layer attached to resilient channel 16" o.c., 23/32" T. & G. plywood subfloor, glue-nailed, over 2"x10" joists 24" o.c.	—	STC 50	EST.	1 hr.	U.L. L513	—	23
2" CONCRETE FLOOR ON METAL LATH OVER STEEL BAR JOISTS 24" O.C.—INCOMBUSTIBLE								
421	5/8" Firestop nailed or screwed to metal furring 16" o.c.	34.2	—	—	1 hr.	U.L. No. 2	ABC	—
427	1/2" Firestop, metal furring 24" o.c.	33.9	—	—	1 1/2 hr.	G502 (U.L. No. 17)	ABC	—
429	5/8" Firestop Type XXX,metal furring 24" o.c.	36.4	—	—	2 hr.	G505 (U.L. No. 259)	ABC	—
431	5/8"Firestop, metal deck 24" o.c.	37.0	—	—	2 hr.	U.L. File R4024-12	ABC	—
2 1/2" CONCRETE FLOOR WITH STEEL BAR JOISTS 24" O.C.—INCOMBUSTIBLE								
440	1/2" Firestop, metal furring 24" o.c.	38.5	—	—	2 hr.	G504 (U.L. No. 237)	ABC	—
442	5/8" Firestop, metal furring 24" o.c.	39.3	—	—	2 hr.	U.L. No. 69	ABC	—
2 1/2" CONCRETE FLOOR WITH OPEN WEB STEEL JOISTS 24" O.C.—INCOMBUSTIBLE								
—	1/2" Firestop, Chicago metallic steel framing 48" o.c.	—	—	—	2 hr.	G523	ABC	—
STEEL-WOOD COMBINATION JOISTS								
450	5/8" Firestop, 18" deep combination steel-wood joists 32" o.c., 3" insulation, resilient furring, carpet and pad, 1 1/8" plywood subfloor	—	STC 47/ INR + 18	L-224-35 & 36	1 hr.	EST.	—	—
452	5/8" Firestop, 18" deep combination steel-wood joists 16" o.c., 3" insulation, 5/8" plywood, lightweight concrete deck, carpet and pad	—	STC 46/ INR + 11	L-224-37 & 38	1 hr.	EST.	—	—
BEAM PROTECTION								
—	5/8" Firestop, 2 layers	—	—	—	2 hr.	N501, N502 (U.L. No. 254, 255)	—	—

*Many of these are new numbers assigned by Underwriters' Laboratories (Old numbers are in parentheses.)

See Page 6 for Notes

SYSTEM INSTALLATION DETAILS

5/8" *FIRESTOP*® GYPSUM BOARD 1 LAYER BOTH SIDES (BASIC 1 HR. FIRE RATED WALL)

#086

STC/34
SOUND TEST OR-64-8

FIRE RATING/1 HR. COMBUSTIBLE
FIRE TEST U.L. U305 (U.L. 5)

Materials Used

1. 2" x 4" Wood Studs 16" o.c.
2. 2" x 4" Wood Plates
3. 5/8" Firestop® Gypsum board
4. 5d Common Nails—7" spacing

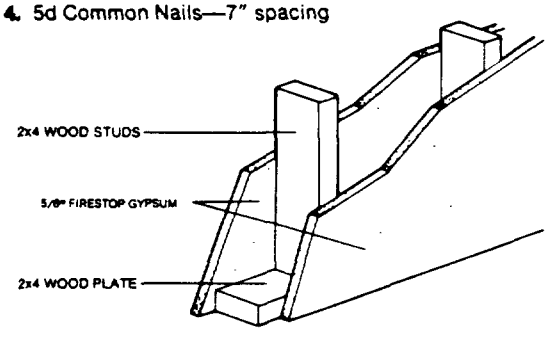



5/8" *FIRESTOP*® GYPSUM BOARD 2 LAYER 2 SIDES

#098

STC/41
SOUND TEST OR-64-12

FIRE RATING/2 HR. COMBUSTIBLE
FIRE TEST T-194

Materials Used

1. 2" x 4" Wood Studs 16" o.c.
2. 2" x 4" Wood Plates
3. 5/8" Firestop® Gypsum board
4. 6d and 8d Nails, 7" o.c.

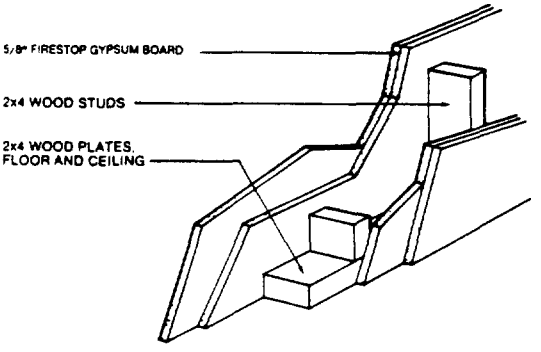

1/2" *FIRESTOP* GYPSUM BOARD LAMINATED TO 1/4" GYPSUM SOUND DEADENING BOARD

#100

STC/45
SOUND TEST G&H BW 27FT

FIRE RATING/1 HR. COMBUSTIBLE
FIRE TEST U.L. U312 (U.L. 30)

Materials Used

1. 2" x 4" Wood Studs 16" o.c.
2. 2" x 4" Wood Plates
3. 1/4" Gypsum Sound Deadening Board
4. 1/2" Firestop® Gypsum board or Firestop® Eternawall™
5. 5d cc Nails, 7" o.c
6. 4d Finish
7. G-P Joint Compound

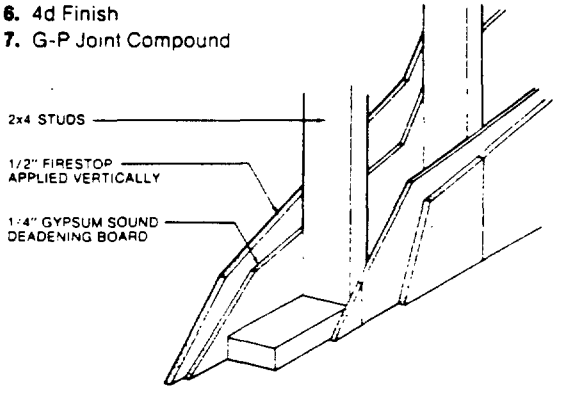

SGP 0023392

5/8" *FIRESTOP*® GYPSUM BOARD LAMINATED TO 1/4" GYPSUM SOUND DEADENING BOARD

#102

STC/47
SOUND TEST G&H BW 28FT
FIRE RATING/1 HR. COMBUSTIBLE
FIRE TEST U.L. U312 (U.L. 30)

Materials Used

1. 2" x 4" Wood Studs 16" o.c.
2. 2" x 4" Wood Plates
3. 1/4" Gypsum Sound Deadening Board
4. 5/8" Firestop® Gypsum board or Firestop® Eternawall™
5. Joint Compound
6. 4d Finishing Nails
7. 5d Nails, 7" o.c.

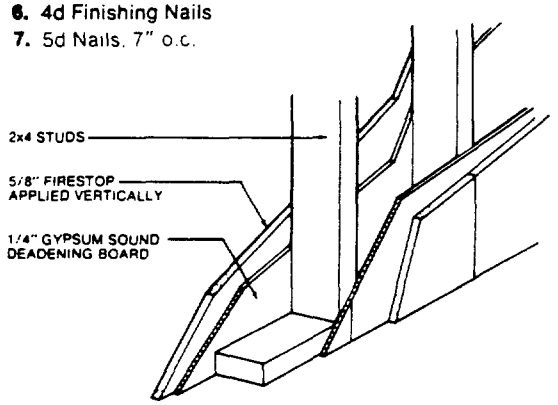

5/8" *FIRESTOP*® GYPSUM BOARD TYPE X, 1 LAYER LAMINATED TO 1/4" S.D.B., 2 SIDES WITH 1 1/2" INSULATION

#106

STC/50
SOUND TEST G&H BW 35FT
FIRE RATING/1 HR. COMBUSTIBLE
FIRE TEST U.L. U312 (U.L. 30)

Materials Used

1. 2" x 4" Wood Studs 16" o.c.
2. 2" x 4" Wood Plates
3. 1/4" Gypsum Sound Deadening Board
4. 5/8" Firestop® Gypsum board or Firestop® Eternawall™ Gypsum board
5. Joint Compound
6. 4d Finishing Nails
7. 5d Nails, 7" o.c.
8. 2" Insulation Batts

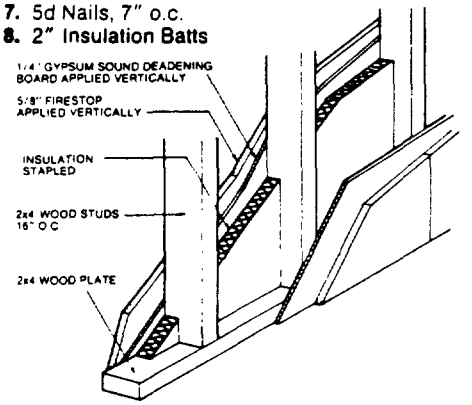

1/2" *FIRESTOP*® GYPSUM BOARD LAMINATED TO 1/4" GYPSUM SOUND DEADENING BOARD

#105

STC/47 STC/52 WITH INSULATION
SOUND TEST G&H BW 29ST/G&H BW 30ST
FIRE RATING/1 HR. COMBUSTIBLE/EST.

Materials Used

1. 2" x 4" Wood Studs staggered 8" o.c. on opposite sides of 2" x 6" Wood Plate
2. 2" x 6" Wood Plate
3. 1/4" G-P Gypsum Sound Deadening Board
4. 1/2" Firestop® or Firestop® Eternawall™ Gypsum board
5. G-P Joint Compound
6. 4d Finishing Nails and 4d Common Nails
7. 5d Common Nails, 7" o.c.
8. 2" Insulation Batts (on BW-30ST for STC/52)

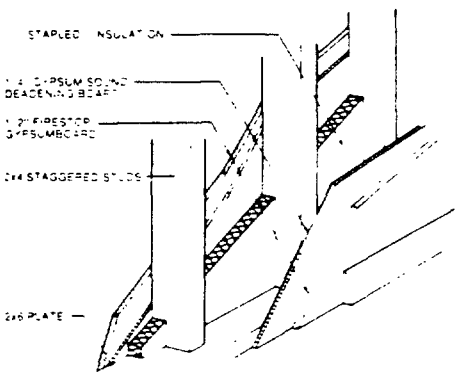

1/2" *FIRESTOP*® GYPSUM BOARD LAMINATED TO 1/4" GYPSUM SOUND DEADENING BOARD

#109

STC/50 STC/55 WITH INSULATION
SOUND TEST G&H BW 31ST/G&H BW 32ST
FIRE RATING/1 HR. COMBUSTIBLE/EST.

Materials Used

1. 2" x 4" Wood Studs (double row) 16" o.c.
2. 2" x 4" Wood Plates—1" apart
3. 1/4" G-P Gypsum Sound Deadening Board
4. 1/2" Firestop® or Firestop® Eternawall™ Gypsum board
5. 4d Finishing Nails, 4d Nails
6. 5d Nails, 7" o.c.
7. G-P Joint Compound
8. 2" Insulation Batts (on BW 32ST with insulation for STC/55)

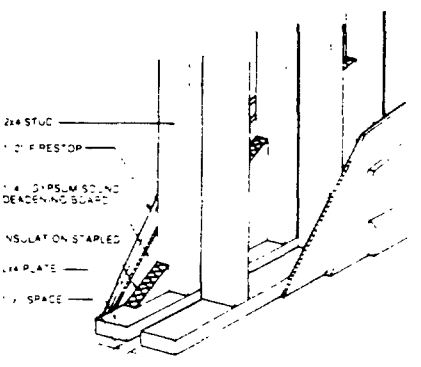

⅝" *FIRESTOP*® GYPSUM BOARD ON RESILIENT CHANNEL

#112

STC/44
SOUND TEST OR-64-7

FIRE RATING/1 HR. COMBUSTIBLE
FIRE TEST T-3127

Materials Used

1. 2" x 4" Wood Studs 16" o.c.
2. 2" x 4" Wood Plates
3. ⅝" Firestop® Gypsum board
4. Resilient Channels
5. 1¼" Type W Gypsum board Screws
6. 1" Type S Gypsum board Screws

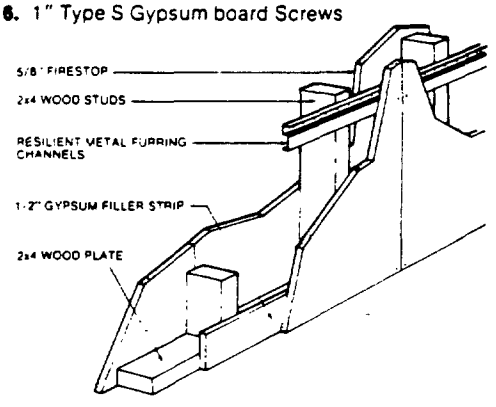



⅝" *FIRESTOP*® GYPSUM BOARD 2 LAYERS 1 SIDE/1 LAYER ON RESILIENT CHANNEL OTHER SIDE

#114

STC/48
SOUND TEST OR-64-15

FIRE RATING/1½ HR. COMBUSTIBLE/EST.

Materials Used

1. 2" x 4" Wood Studs 16" o.c.
2. 2" x 4" Wood Plates
3. ⅝" Firestop® Gypsum board
4. Resilient Channels
5. 1¼" Type W Gypsum board Screws
6. 1" Type S Gypsum board Screws

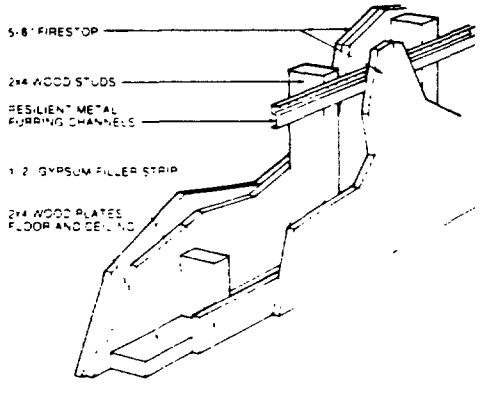

⅝" *FIREST[illegible]*® GYPSUM BOARD ON RESILIENT CHANNEL WITH INSULATION IN CAVITY

#116

STC/50
SOUND TEST OR-64-16

FIRE RATING/1 HR. COMBUSTIBLE
FIRE TEST T-3127

Materials Used

1. 2" x 4" Wood Studs 16" o.c.
2. 2" x 4" Wood Plates
3. ⅝" Firestop® Gypsum board
4. 2" Insulation
5. Resilient Channels
6. 1¼" Type W Gypsum board Screws
7. 1" Type S Gypsum board Screws

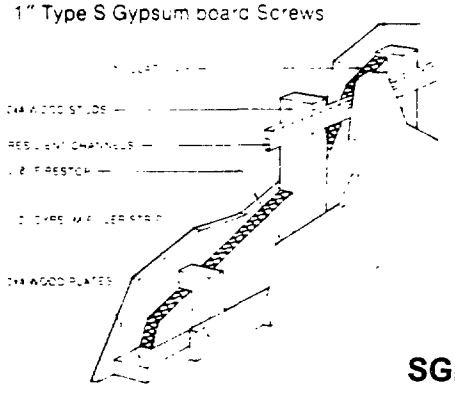

5/8" *FIRESTOP*® GYPSUM BOARD OVER FIBER SOUND DEADENING BOARD 2 SIDES

#118

STC/46
SOUND TEST OR-64-73

FIRE RATING/1 HR. COMBUSTIBLE
FIRE TEST T-3006

Materials Used
1. 2" x 4" Wood Studs 16" o.c.
2. 2" x 4" Wood Plates
3. 2" x 4" Wood Fire Blocks
4. ½" Fiber Sound Deadening Board
5. 5/8" Firestop® Gypsum board
6. 5d Cement Coated Nails and 8d Box Nails
7. Laminating or Joint Compound

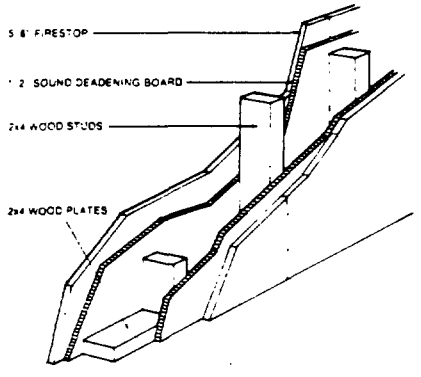

½" *FIRESTOP*® GYPSUM BOARD 1 LAYER EACH SIDE OVER T. & G. COREBOARD

#230

STC/36
SOUND TEST G.A.

FIRE RATING/2 HR. NON-COMBUSTIBLE
FIRE TEST G.A.

Materials Used
1. 1" T. & G. Coreboard, "V" edge
2. ½" Firestop Gypsum board
3. Metal Track
4. Laminating Adhesive

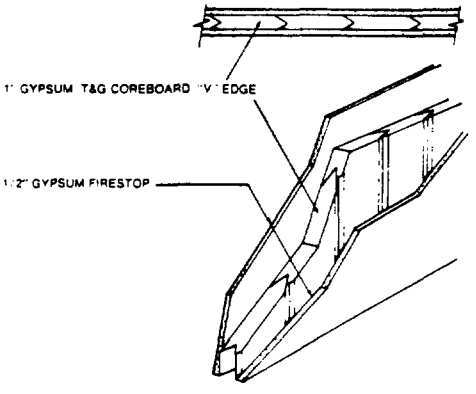

½" *FIRESTOP*® GYPSUM BOARD 2 LAYERS ON FACE, 1 LAYER INSIDE, BOTH SIDES

#175

STC/57 STC/59 WITH INSULATION
SOUND TEST R.A.L.

FIRE RATING/2 HR. COMBUSTIBLE
FIRE TEST FM WP-297

Materials Used
1. 2" x 4" Wood Studs 24" o.c.
2. Fireblocks—2" x 4" x 22½"
3. ½" Firestop® Gypsum board
4. 8d Coated Box Nails
5. 6d Coated Box Nails
6. 6d Nails
7. 12d Common Nails

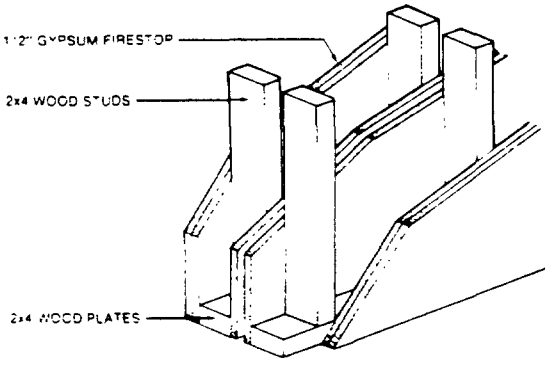

½" GYPSUM BOARD OVER COREBOARD

#200

STC/47
SOUND TEST OR-64-39

FIRE RATING/2 HR. NON-COMBUSTIBLE
FIRE TEST T-2575

Materials Used
1. 3" x 1 5/8" Wood Perimeter Framing
2. 1" x 24" Tongue & Groove Coreboard
3. ½" Gypsum board
4. Laminating Compound
5. 8d Nails

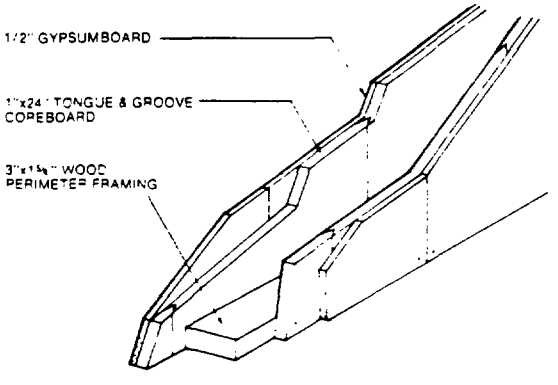



5/8" *FIRESTOP*® GYPSUM BOARD 1 LAYER EACH SIDE

#300

STC/35
SOUND TEST OR-64-81

FIRE RATING/1 HR. NON-COMBUSTIBLE
FIRE TEST T-2316

Materials Used

1. 1 5/8" Steel Studs, 24" o.c.
2. 1 5/8" Floor and Ceiling Track
3. 5/8" Firestop® Gypsum board
4. 1" Type S Gypsum board Screws

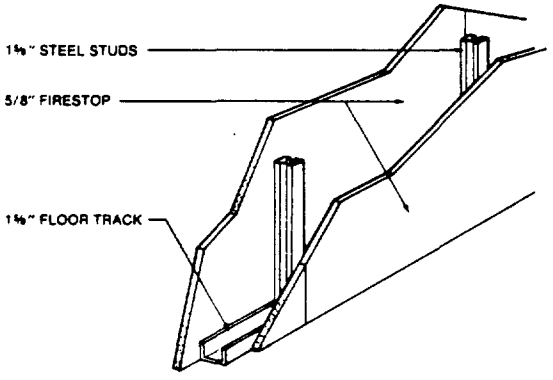

1/2" *FIRESTOP*® GYPSUM BOARD 1 LAYER EACH SIDE WITH INSULATION IN CAVITY

#328

STC/41
SOUND TEST OR-66-5

FIRE RATING/1 HR. NON-COMBUSTIBLE

Materials Used

1. 2 1/2" Metal Stud 24" o.c.
2. 2 1/2" Metal Track Top and Bottom
3. 1/2" Firestop Gypsum board
4. 2 1/2" Insulation
5. 1" Gypsum board Screws

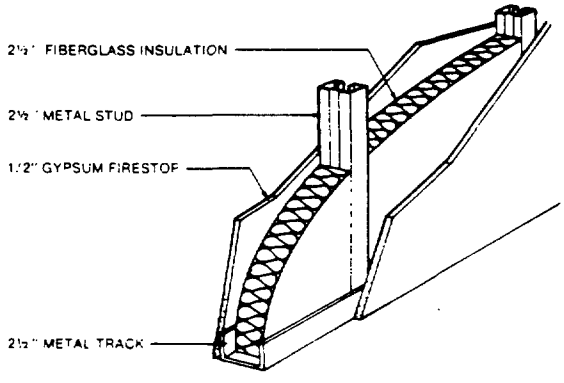

5/8" *FIRESTOP*® GYPSUM BOARD 1 LAYER EACH SIDE WITH INSULATION IN CAVITY

#302

STC/44
SOUND TEST OR-64-81

FIRE RATING/1 HR. NON-COMBUSTIBLE
FIRE TEST T-2316

Materials Used

1. 1 5/8" Steel Studs, 24" o.c.
2. 1 5/8" Floor and Ceiling Track
3. 5/8" Firestop® Gypsum board
4. 1 1/2" Insulation
5. 1" Type S Gypsum board Screws

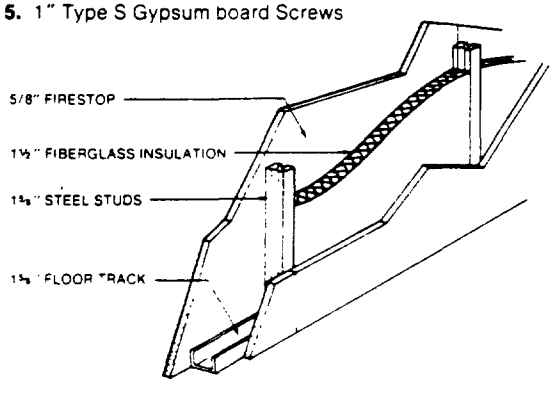

½" *FIRESTOP*® GYPSUM BOARD 1 LAYER OVER ¼" GYPSUM SOUND DEADENING BOARD EACH SIDE

#304

STC/45
SOUND TEST BW 16FT

FIRE RATING/1 HR. NON-COMBUSTIBLE
FIRE TEST T-3854 & U410 (U.L. 32)

Materials Used

1. 2½" Steel Studs, 24" o.c.
2. 2½" G-P Steel Track
3. ¼" Gypsum Sound Deadening Board
4. 1" Type S Gypsum board Screws
5. ½" Firestop® Gypsum board or Firestop® Eternawall™ Gypsum board
6. 1⅜" Type S Gypsum board Screws

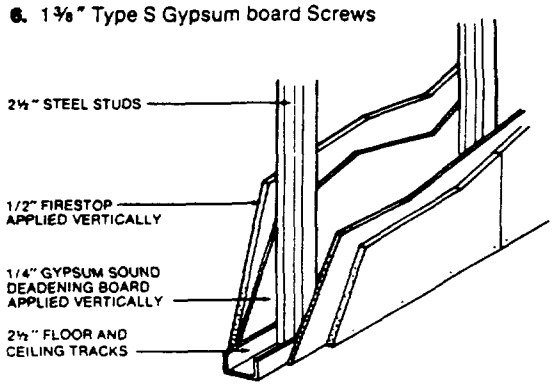

½" *FIRESTOP*® GYPSUM BOARD OVER ¼" GYPSUM SOUND DEADENING BOARD WITH INSULATION IN CAVITY

#306

STC/50
SOUND TEST BW 17FT

FIRE RATING/1 HR. NON-COMBUSTIBLE
FIRE TEST UL U410

Materials Used

1. 2½" G-P Steel Studs, 24" o.c.
2. 2½" G-P Steel Track
3. 2" Insulation
4. ¼" G-P Gypsum Sound Deadening Board
5. 1" G-P Type S Gypsum board Screws
6. ½" Firestop® Gypsum board or Firestop® Eternawall™ Gypsum board
7. 1⅜" G-P Type S Gypsum board Screws

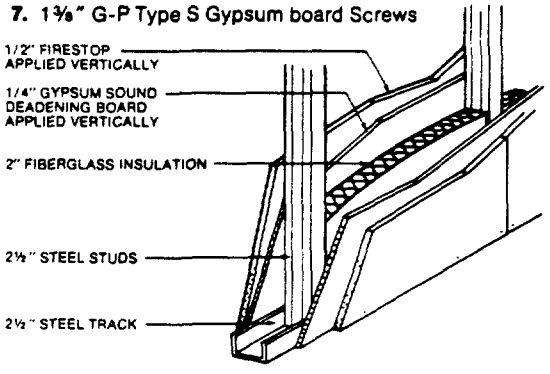



⅝" *FIRESTOP*® GYPSUM BOARD OVER ¼" GYPSUM SOUND DEADENING BOARD WITH INSULATION IN CAVITY

#308

STC/54
SOUND TEST BW 18FT

FIRE RATING/1 HR. NON-COMBUSTIBLE
FIRE TEST UL U410

Materials Used

1. 2½" G-P Steel Studs, 24" o.c
2. 2½" G-P Steel Track
3. 2" Insulation
4. ¼" G-P Gypsum Sound Deadening Board
5. 1" G-P Type S Gypsum board Screws
6. ⅝" Firestop® Gypsum board or Firestop® Eternawall™ Gypsum board
7. 1⅜" G-P Type E Gypsum board Screws

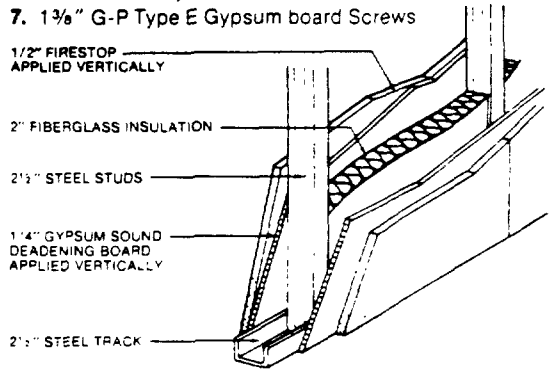

½" *FIRESTOP*® GYPSUM BOARD, LAYERS 2 SIDES WITH INSULATION IN CAVITY

#310

STC/48

SOUND TEST BW 12FT

FIRE RATING/2 HR. NON-COMBUSTIBLE

FIRE TEST T-3218

(fiberglass insulation not required for fire rating)

Materials Used

1. 2½" G-P Steel Studs, 24" o.c.
2. 2½" Floor and Ceiling Tracks
3. ½" Firestop® Gypsum board
4. 2" Insulation
5. Laminating or Joint Compound
6. 1" and 1⅜" Type S Gypsum board Screws

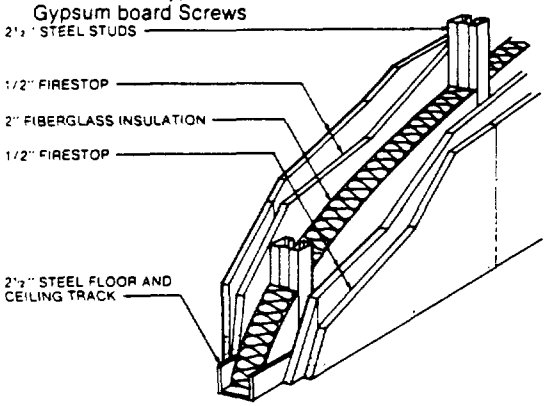

⅝" *FIRESTOP*® GYPSUM BOARD, 1 LAYER 1 SIDE, 2 LAYERS OTHER SIDE

#312

STC/43

SOUND TEST OR-63-2

FIRE RATING/1½ HR. NON-COMBUSTIBLE/ EST.

Materials Used

1. 2½" G-P Steel Studs, 24" o.c.
2. 2½" Floor and Ceiling Track
3. ⅝" Firestop® Gypsum board
4. 1" and 1⅝" Type S Gypsum board Screws

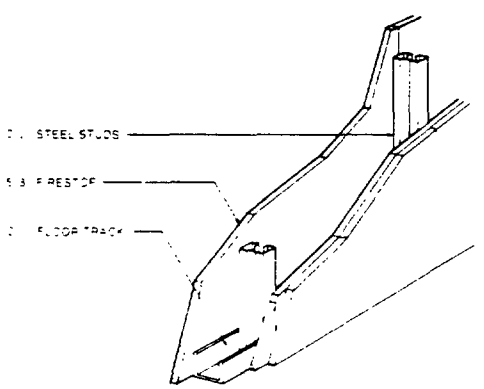

⅝" *FIRESTOP*® GYPSUM BOARD, 2 LAYERS 2 SIDES

#314

STC/46 EST.

FIRE RATING/2 HR. NON-COMBUSTIBLE/EST.

FIRE TEST T-2557

Materials Used

1. 2½" G-P Steel Studs, 24" o.c.
2. 2½" Floor and Ceiling Track
3. ⅝" Firestop® Gypsum board, 2 layers each side
4. 1" & 1⅝" Type S Screws

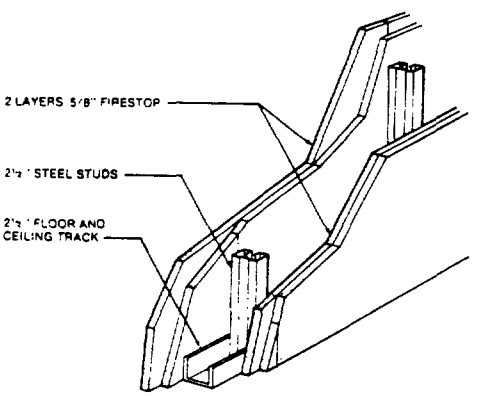

½" *FIRESTOP*® GYPSUM BOARD, 1 LAYER 1 SIDE, ½" G-P REGULAR, 2 LAYERS OTHER SIDE

#316

STC/48 EST.

FIRE RATING/1 HR. NON-COMBUSTIBLE

FIRE TEST T-4848

Materials Used

1. 3⅝" Steel Studs, 24" o.c.
2. 3⅝" Track
3. ½" Firestop® Gypsum board
4. ½" Regular Gypsum board, 2 layers
5. 1½" Insulation (not required for fire rating)
6. 1" and 1⅝" Type S Screws

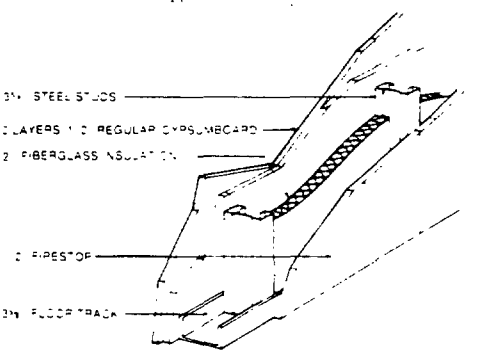

5/8" *FIRESTOP*® GYPSUM BOARD, 2 LAYERS 1 SIDE, 1 LAYER OTHER SIDE WITH INSULATION IN CAVITY

#318

STC/50
SOUND TEST OR-64-51

FIRE RATING/1½ HR. NON-COMBUSTIBLE
FIRE TEST T-3126

Materials Used
1. 3⅝" Steel Studs, 24" o.c.
2. 3⅝" Floor and Ceiling Track
3. ⅝" Firestop® Gypsum board
4. 3" Insulation
5. Laminating Compound
6. 1" and 1⅞" Type S Gypsum board Screws

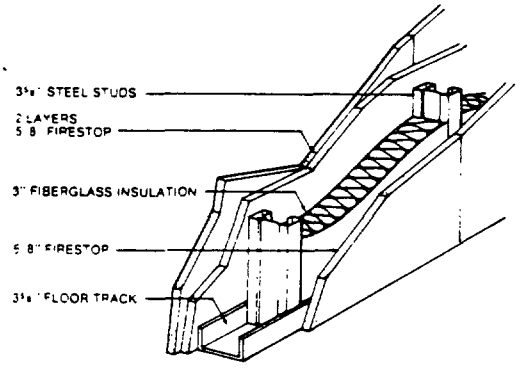



5/8" *FIRESTOP*® GYPSUM BOARD, 1 LAYER 1 SIDE, 1 LAYER OVER ½" FIBER S.D. BOARD OTHER SIDE

#320

STC/44
SOUND TEST OR-65-10

FIRE RATING/1 HR. NON-COMBUSTIBLE
FIRE TEST EST.

Materials Used
1. 3⅝" Steel Studs, 24" o.c.
2. 3⅝" Floor and Ceiling Track
3. ½" Fiber Sound Deadening Board
4. Laminating Compound
5. ⅝" Firestop® Gypsum board
6. 1" and 1⅝" Type S Gypsum board Screws

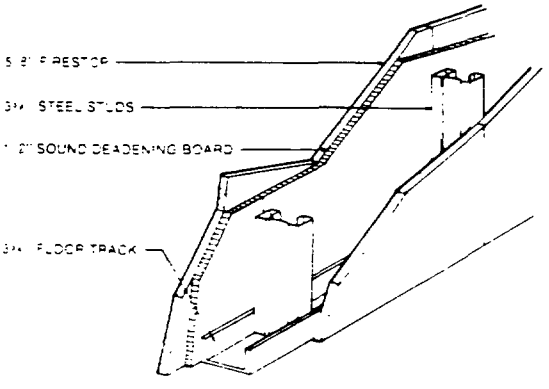

5/8" *FIRESTOP* GYPSUM BOARD, 2 LAYERS 2 SIDES

#322

STC/47
SOUND TEST OR-64-52

FIRE RATING/2 HR. NON-COMBUSTIBLE
FIRE TEST T-2557

Materials Used
1. 3⅝" Steel Studs, 24" o.c.
2. 3⅝" Floor and Ceiling Track
3. Laminating Compound
4. ⅝" Firestop® Gypsum board
5. 1" and 1⅝" Type S Gypsum board Screws

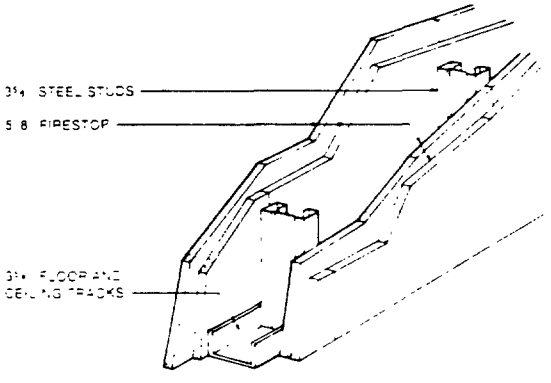

5/8" *FIRESTOP*® GYPSUM BOARD, 2 LAYERS 2 SIDES WITH INSULATION IN CAVITY

#324

STC/52
SOUND TEST OR-64-50

FIRE RATING/2 HR. NON-COMBUSTIBLE
FIRE TEST T-2557

Materials Used

1. 3 5/8" Steel Studs, 24" o.c.
2. 3 5/8" Floor and Ceiling Track
3. 5/8" Firestop® Gypsum board
4. 2" Insulation
5. Laminating or Joint Compound
6. 1" and 1 5/8" Type S Gypsum board Screws

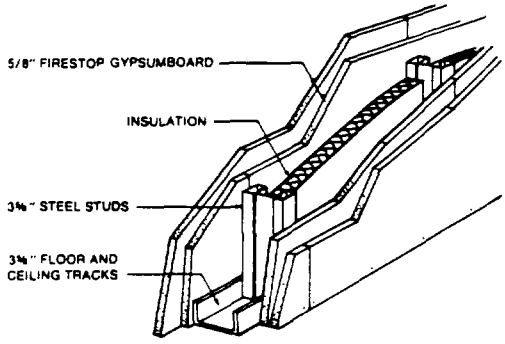

1/2" *FIRESTOP*® GYPSUM BOARD, OVER 1/4" GYPSUM SOUND DEADENING BOARD

#415

STC/41; IIC 75 (WITH CARPET & PAD)
SOUND TEST G&H BW 2-MT

FIRE RATING/1 HR. NON-COMBUSTIBLE
EST. BASED ON L 503 (U.L. 46)

Materials Used

1. 2" x 10" Wood Joists
2. Carpet and Pad
3. 1/2" Particleboard Underlayment
4. 5/8" CD Grade Plywood Subfloor
5. 1/4" G-P Gypsum Sound Deadening Board
6. 1/2" Firestop® Gypsum board
7. 4d Ring Shank Nails; 6d Common Nails; 8d Common Nails

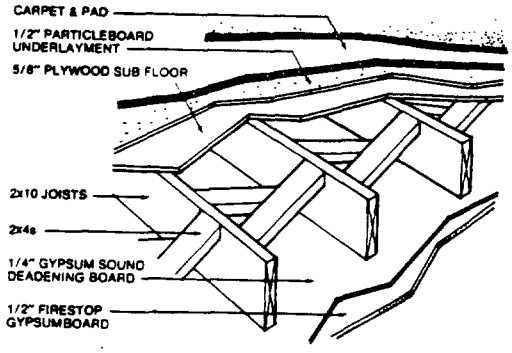

1/2" *FIRESTOP*® GYPSUM BOARD, OVER 1/4" GYPSUM SOUND DEADENING BOARD

#326

STC/47 STC/52 WITH INSULATION*
SOUND TESTS: BW-33ST/BW 34ST

FIRE RATING/1 HR. NON-COMBUSTIBLE

Materials Used

1. 1 5/8" Steel Studs, 24" o.c.
2. 1 5/8" Floor and Ceiling Track
3. 1/4" G-P 1/4" Gypsum Sound Deadening Board
4. 1/2" Firestop® Gypsum board or Firestop® Eternawall™ Gypsum board
5. 1 3/4" Type S Gypsum board Screws
6. 1 1/4" Type S Gypsum board Screws
7. 1/2" x 6" x 12" Gypsum board Spacers
8. 2" Insulation Batts (on BW-34ST for 52 STC)

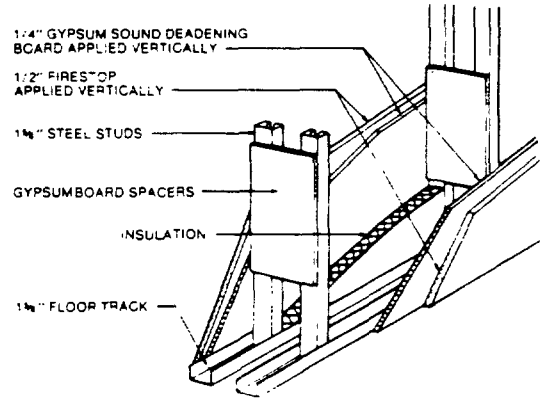

1/2" *FIRESTOP*® GYPSUM BOARD ON RESILIENT METAL FURRING (FLOOR/CEILING)

#402

STC/47
SOUND TEST TL 65-155

FIRE RATING/1 HR. NON-COMBUSTIBLE
FIRE TEST L502 (U.L. 33)

Materials Used

1. 2" x 10" Wood Joists
2. Rosin Building Paper
3. 1" x 6" Tongue and Groove Subflooring
4. 1" x 4" Tongue and Groove Finished Flooring
5. Donn DG-8 Resilient Channels
6. 1/2" Firestop® Gypsum board
7. 1" Type S Gypsum board Screws and 8d Nails

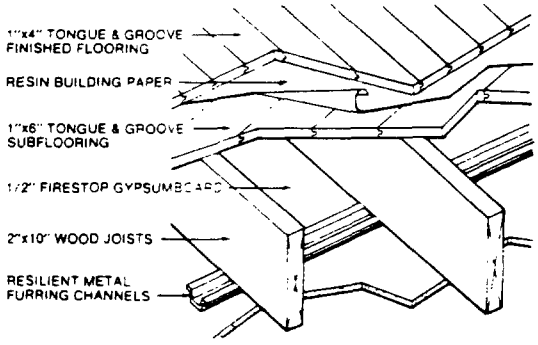

5/8" *FIRESTOP*® GYPSUM BOARD ON RESILIENT METAL FURRING (FLOOR/CEILING)

#404

STC/48
SOUND TEST L-224-4

FIRE RATING/1 HR. COMBUSTIBLE/EST.

Materials Used

1. 2" x 8" Wood Joists—16" o.c.
2. 5/8" Plywood
3. 44 oz. Wool Carpet
4. 40 oz. All Hair Pad
5. 3" Insulation
6. Resilient Channels
7. 5/8" Firestop® Gypsum board
8. 8d Nails
9. 1" and 1¼" Gypsum board Screws

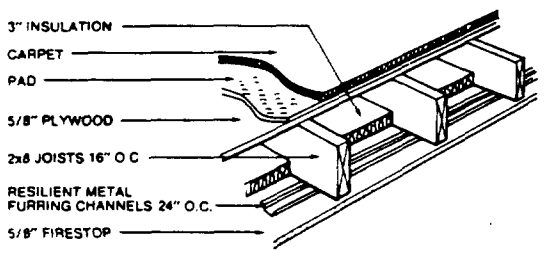

1/2" *FIRESTOP*® GYPSUM BOARD ON RESILIENT METAL CHANNEL 24" O.C.

#420

STC/53; IIC 72

FIRE RATING/1 HR. COMBUSTIBLE
FIRE TEST FC 181 (FM)

Materials Used

1. 2" x 10" Wood Joists
2. 5/8" Plywood Subflooring
3. 3/8" Particleboard
4. 1¼" Nails
5. 8d Nails
6. ½" Firestop® Gypsum board
7. Resilient Channel
8. 8d Nails
9. 1" Gypsum board Screws
10. 3½" Insulation
11. Carpet and Pad

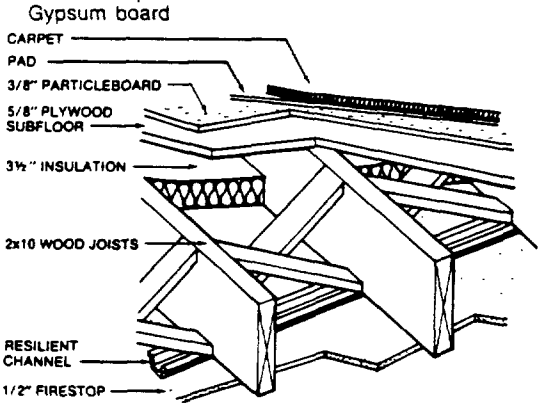

5/8" *FIRESTOP*® GYPSUM BOARD INSULATION WITH CEILING INDEPENDENT OF FLOOR

#406

STC/51; INR + 29
SOUND TESTS: KAL-224-14, KAL-224-15

FIRE RATING/1 HR. COMBUSTIBLE/EST.

Materials Used

1. 2" x 8" Wood Joists
2. ½" Plywood
3. 44 oz. Wool Carpet
4. 40 oz. All Hair Pad
5. 8d Nails
6. 2" x 4" Joists
7. 3" Insulation
8. 5/8" Firestop® Gypsum board

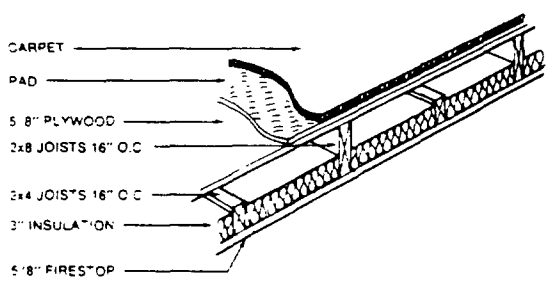

5/8" *FIRESTOP*® GYPSUM BOARD ON RESILIENT METAL CHANNEL

#475

STC/50/EST.; IIC/70/EST.
(WITH CARPET & PAD)

FIRE RATING/1 HR. COMBUSTIBLE
FIRE TEST U.L. L513

Materials Used

1. 23/32" T. & G. Plywood
2. Adhesive
3. 5/8" Gypsum board Strips
4. 2" x 10" Wood Joists
5. Resilient Furring Channels
6. 5/8" Firestop® Gypsum board

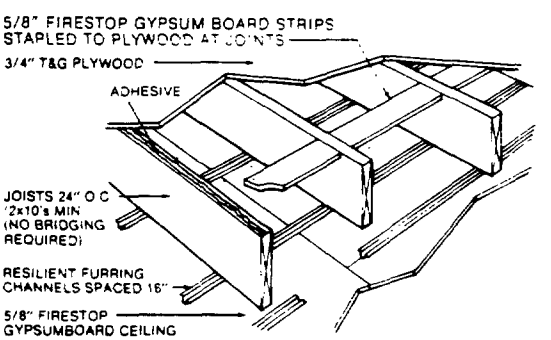

SGP 0023401

5/8 "FIRESTOP" GYPSUM BOARD— 2 HR. RATING—NONCOMBUSTIBLE, FLOOR/CEILING

INSTALLATION DETAILS

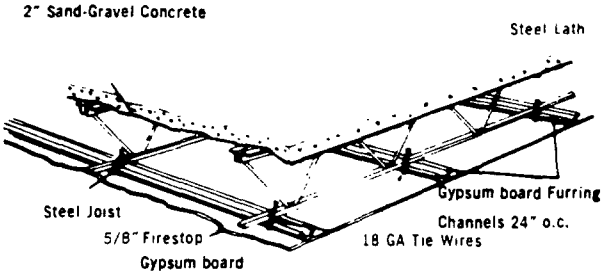

U.L. Design G505 (UL 259)—2 Hr. (with 2" concrete)

Construction with G-P Firestop® board saves money! G-P 5/8" Firestop gypsum board per units use of 2" concrete floor whereas other systems require 2½" concrete floor for a 2 hour fire rating. The reduction in weight makes possible considerable savings in material and labor.

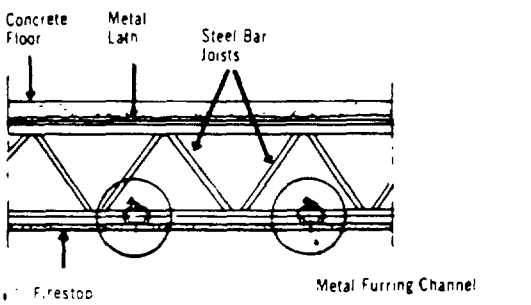

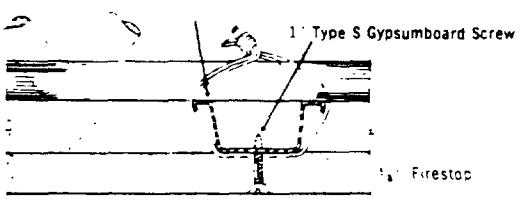

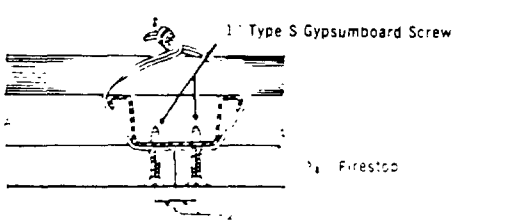

UL Design G505 attachment details

INSTALLATION DETAILS

APPLICATION OF RIGID PREDECORATED PANELS TO GYPSUM SUBSTRATE

Use 3/8" or ½" gypsum board. Attach to studs with 1 3/8" gypsum board nails, 1" gypsum board screws (metal studs) or drywall stud adhesive. Joints need not be taped or sealed. Install the gypsum board vertically with the edges centered on the framing members.

The rigid predecorated panels should be applied using a bead of panel adhesive over each stud. Secure paneling at top and bottom plates with 4d finishing nails 12" o.c. Field fasteners not required unless panels are bowed.

The addition of gypsum board as a substrate when using predecorated panels provides increased FIRE RESISTANCE and SOUND CONTROL.

TEST RESULTS

	Paneling (No Gypsum)	Paneling with 3/8" Gypsum	Paneling with ½" Gypsum
Burn thru Time	8 min.	42 min.	73 min. (plus)
Better Sound Rating	28 STC	40 STC	40 STC
Better Impact Resistance	26	82	82

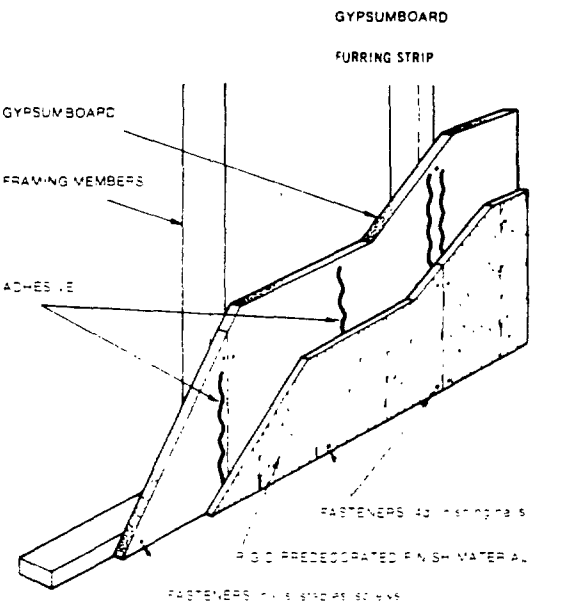

SGP 0023402

APPLICATION OVER MASONRY WALLS

On masonry walls either above or below grade, be sure the wall is properly waterproofed before furring is applied. Although moisture barrier gypsum board are available—there is obviously no substitute for proper waterproofing.

Wood Strips or Metal Channels: Apply furring horizontally or vertically. Space 16" o.c. for ¼" and ⅜" gypsum board, and 24" o.c. for ½" and ⅝" gypsum board. Use concrete stub nails or power driven fasteners to install furring. Gypsum board should be applied perpendicular to furring. Use G-P insulating Gypsum board.

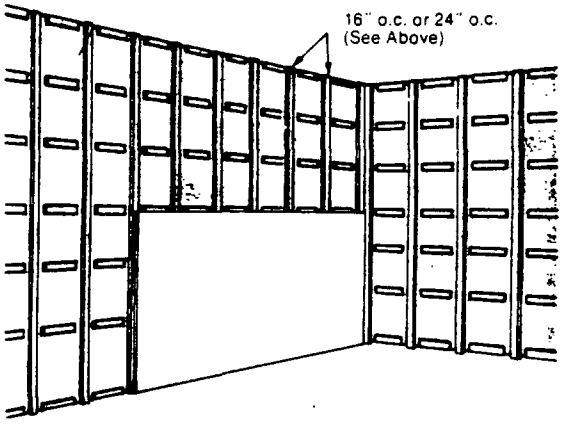

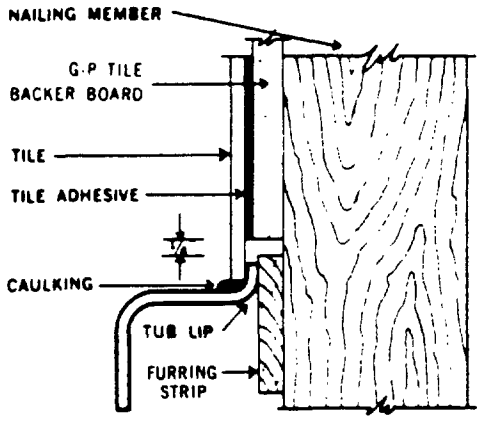

TUB

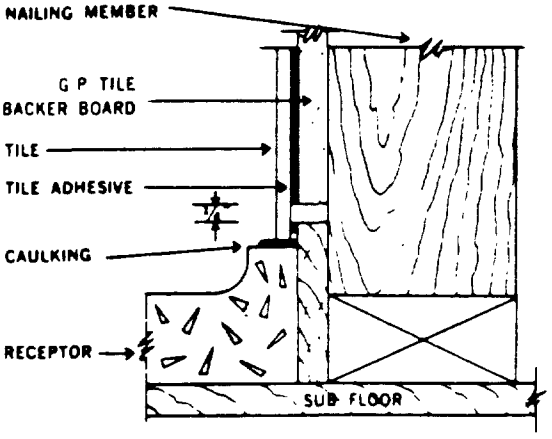

SHOWER RECEPTOR

WATER RESISTANT GYPSUM BOARD

G-P Tile Backer Board is a water resistant gypsum product with a light blue face paper, designed for use as a base for the adhesive application of ceramic, metal or plastic tile. The gypsum core consists of noncombustible gypsum rock, combined with an emulsion giving high water resistance. This product is especially designed for bathrooms, powder rooms, utility rooms and kitchens. Caution: G-P Tile Backer Board is not designed for exterior areas or other areas where there may be sustained moisture or humidity.

For fire rated partitions between bathrooms or interior areas subject to moisture use ⅝" Firestop® Tile Backer proven by Underwriters' Laboratories in a 1-hour assembly over wood studs.

The raw edges of Tile Backer Board (end joints, cut edges, cut-outs) are to be caulked with a coating of the waterproof compound used in applying the tile. As an alternate to caulking, G-P can provide a special 2½" wide self-adhering vinyl tape to place over edges and cut-outs.

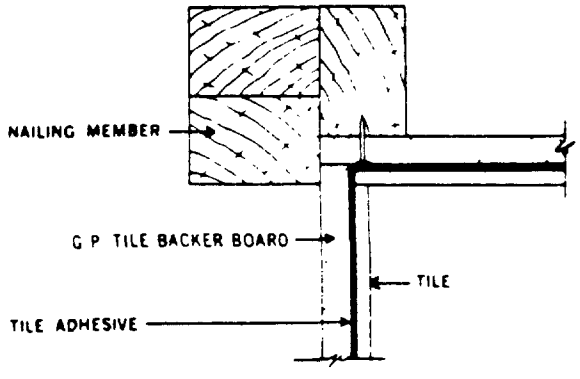

CORNER DETAIL

*For fire and sound rated construction the Tile Backer Board must extend to the floor.



2" SOLID LAMINATED—(NON-LOAD BEARING)

A 1" gypsum coreboard with ½" gypsum board laminated to each side; no air space. A 2" solid wall system has a 2 hour fire rating, an STC rating of 35, produces smooth monolithic walls and creates extra usable floor space.

2" SOLID LAMINATED FLOOR AND CEILING DETAILS

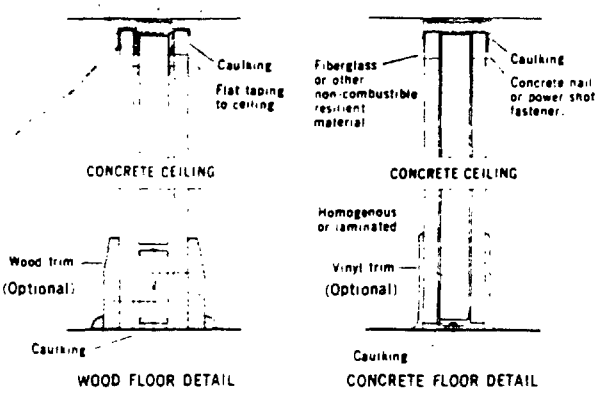

COLUMN FIREPROOFING

Fireproofing with Firestop® Gypsum board provides a fast, efficient and economical method of protecting steel columns. Fire resistant assemblies of two, three and four hours are obtainable depending upon the number of layers of ⅝" or ½" Firestop Gypsum board used. These layers are held in place by a combination of screws and metal studs. The two, three and four hour fire rated assemblies of Firestop Gypsum board have passed Official Fire Tests conducted by the Underwriters' Laboratories.

Fire Resistance—For three hour protection, two layers of ½" Firestop Type XXX can be used. Test No. X513 (UL 39-3 hour). Two hour protection can be obtained using 1 layer of ½" Firestop Type XXX Gypsum board. Test No. X520 (UL 20-2 hour). These are for heavyweight columns (14 W.F. 228).

For lightweight columns (10 W.F. 49) use 4 layers of ⅝" G-P Firestop Type X for 4 hour protection, 3 layers for 3 hours. Test No. X509 (UL 18) and 2 layers for 2 hour, Test No. 517 (UL 8).

Lighter—As compared to other types of fireproofing, a dead load savings of from 50 to 75% can be realized with G-P Firestop Column Fireproofing.

Speed of Erection—Firestop Gypsum board can be installed quickly and easily when used for column fireproofing following G-P details. Minimum amount of the wire and adhesives are used.

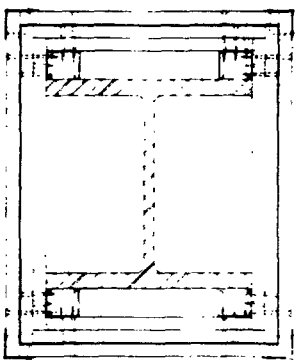

THREE-HOUR fire rated steel column assembly with ⅝" Firestop. X509 (UL 18). Minimum size of column W10X49.

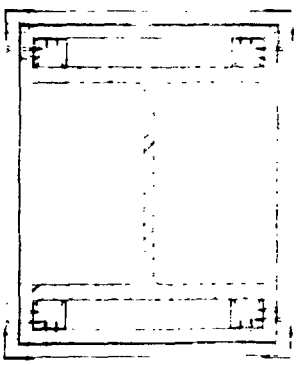

TWO HOUR fire rated steel column assembly with ⅝" Firestop. X517 (UL 8). Minimum size of column W10X49.

SGP 0023404

WOOD AND STEEL STUD APPLICATION

There are many different kinds of construction systems and all are based on the requirements of your particular building installation. Basically, the main considerations are usually: **Fire Resistance, Sound Transmission, Relative Strength of the Installation, Dimensional Restrictions and Economy.**

After the wall and floor/ceiling constructions have been selected, it is important that they be installed properly. The following precautions should be taken during installation to avoid situations or conditions which will detract from the sound control properties of the assembly.

Avoid connecting plenum chambers, ducts, vents, etc. These permit the unrestricted flow of sound. Corrective measures are to make partitions full height, and use ducts lined with absorbent material.

Materials: All gypsum board shall be G-P Gypsum board 3/8", 1/2" or 5/8" thick Regular or Firestop®, 4' wide x ceiling height for vertical application or up to 16' long for horizontal application, tapered edge. All joint treatment products are to be G-P materials.

Framing: Prior to the gypsum board application, all framing members should be true and firmly fastened in a plane surface. Provide double studs at all corners. Both inside and outside intersections are formed by extending one edge of a panel over the other edge in a flush position and covering with tape and joint treatment. In single ply installation, all ends and joints of gypsum board shall occur over framing members, except that this is not required for treated joints at right angles to framing members.

Application: Gypsum board may be applied horizontally or vertically to framing with nails or screws. (Alternate method-stud adhesive may be applied to studs before applying gypsum board.) The gypsum board shall be attached with nails meeting ASTM-C514 or with 1 1/4" long G-P Type "W" gypsum board screws or 1" long G-P Type "S" gypsum board screws, for wood and metal or framing, respectively.



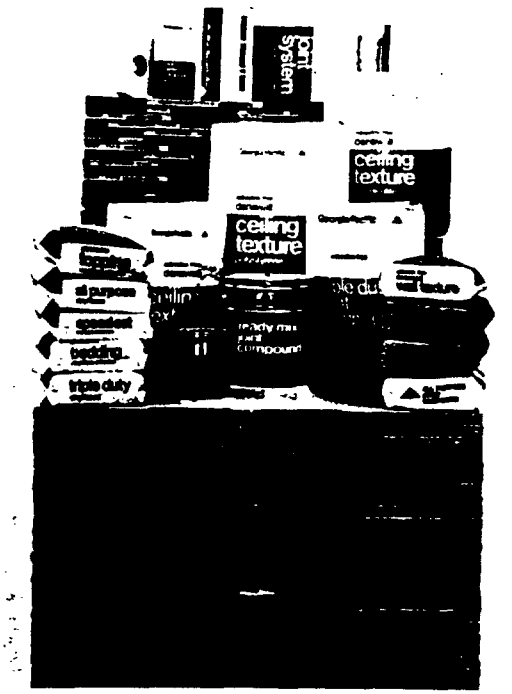

SINGLE PLY GYPSUM BOARD MAXIMUM FRAMING SPACING*

Thickness	Maximum Spacing	Application
3/8" on walls	16" o.c	Horizontal or Vertical
1/2" on walls	24" o.c.	Horizontal or Vertical
5/8" on walls	24" o.c.	Horizontal or Vertical
3/8" on ceilings	Not recommended	Not recommended
1/2" on ceilings*	16" o.c.	Parallel* or Perpendicular
1/2" on ceilings*	24" o.c	Perpendicular* only
5/8" on ceilings	16" or 24" o.c.	Parallel or Perpendicular

FOR WATER BASE TEXTURE APPLICATION

Thickness	Max. Spacing	Application
1/2" on ceiling	16" o.c.	Perpendicular only
5/8" on ceiling	24" o.c.	Perpendicular only

NAILING OR SCREW SPACING FOR SINGLE-PLY GYPSUM BOARD

Gypsum board Thickness	Single Nailing	Double Nailing
3/8" sidewalls	8" o.c. Max.	12" o.c. Max.
1/2" sidewalls	8" o.c. Max.	12" o.c. Max.
1/2" ceilings	7" o.c. Max.	12" o.c. Max.
5/8" sidewalls	8" o.c. Max.	12" o.c. Max.
ceilings	7" o.c. Max.	12" o.c. Max.

Gypsum board Thickness	Framing 16" o.c. Screw Spacing	Framing 24" o.c. Screw Spacing
3/8" sidewalls	16" o.c. Max	—
1/2" sidewalls	16" o.c. Max.	12" o.c. Max
5/8" sidewalls	16" o.c. Max.	12" o.c. Max.
1/2" & 5/8" ceilings	12" o.c. Max	12" o.c. Max.

NOTE: Nails or screws should be driven not less than 3/8" from edges or ends of panels and maximum of about 1" except for floating angles While fasteners are being driven, the gypsum board shall be held in firm contact with the underlying supports Preferably, application of fasteners should proceed from the central portion of the gypsum board to the ends and edge Dimple nails or screws without breaking the face paper **Joints:** All joints should be taped and finished with tape and joint compound, nail or screw heads should be finished with joint compound. Exterior angles are covered with G-P Metal Casing Beads and finished with joint compound

GYPSUM BOARD PRODUCTS

Georgia-Pacific Gypsum Division manufactures a full range of products to meet the needs of the construction industry. The versatile gypsum product provides builders with lightweight construction materials that are workable, fire and noise resistant and time saving. G-P research facilities have responded to the industry's requests and have developed the following multi-use, highly reliable, low cost products.

G-P GYPSUM BOARD EDGES

T—Tapered
S—Square
RE—Tapered with Round Edge
B—Beveled (Special Order)
T & G—Tongue and Groove
MB—Modified Beveled Edge

See page 31 for detailed description

G-P REGULAR GYPSUM BOARD

G-P Regular Gypsum board is faced with a strong, cream colored paper which will accommodate almost any type of decorative treatment. The back paper, which is gray, is as strong as the face paper. The ½" and ⅝" tapered and round edge gypsum board are recommended for single layer application in new construction. They are designed to be reinforced with G-P Joint System products resulting in a smooth, seamless surface.

Square edges are recommended for use where joints will be exposed. The resistance to fire exposure and sound transmission increase with thickness and the number of layers of board used. Bevel edges can be used where a panel effect is desired.

Thickness	Widths	Lengths	Edge
¼" ⅜" ½" ⅝"	4'	6' to 16' in even feet	T, S, B, RE

FIRESTOP® GYPSUM BOARD

Firestop Gypsum board develops 45 minute to 3 hour fire resistant ratings in various wood and steel wall, floor/ceiling assemblies and column and beam protection. Textile glass filaments and other ingredients keep the core intact, even after the chemically combined water has been released.

Thickness	Widths	Lengths	Edge
½" ⅝"	4'	6' to 16' in even feet	T, S, B, RE

G-P ¼" GYPSUM SOUND DEADENING BOARD

G-P ¼" Noncombustible Gypsum Sound Deadening Board, when used in the system specified, meets the requirements of the most sophisticated sound control systems available. It is also one of the easiest sound control materials to install. When combined with other gypsum board, it reduces sound transmission, has high structural strength, is noncombustible. It has a distinctive green face paper. When applied over 2½" steel studs or 2 x 4 wood studs, one layer of ½" Firestop Gypsum board over one layer of ¼" Gypsum Sound Deadening Board produces a 1-hour fire resistive wall and a 45 S.T.C.

Thickness	Widths	Lengths	Edge
¼"	4'	8'	S

G-P REGULAR TILE BACKER BOARD

This is a water-resistant gypsum product with a light blue face paper, designed for use as a base for the adhesive application of ceramic, metal or plastic tile. The gypsum core consists of non-combustible gypsum rock, combined with an asphalt wax emulsion giving high water resistance. Ideal for bathrooms, kitchens, powder rooms and other moisture areas. (See caution: page 25)

G-P Tile Backer Board can be erected as easily as regular gypsum board and requires no finishing of joints or nail heads under tile with joint treatment nor further waterproofing under tile applied with adhesive unless required by local code.

Thickness	Widths	Lengths	Edge
½"	4'	8' to 12'	T

FIRESTOP TILE BACKER BOARD

Same as Regular Tile Backer Board plus the addition of glass fiber reinforcement gives increased fire protection and strength. Where fire rated assemblies are required in areas subject to moisture, such as partitions between bathrooms and other interior areas, most building codes allow the use of Firestop Tile Backer Board. The use of ⅝" Firestop Tile Backer Board will give the same fire resistant rating as other Firestop board. Only in design 5—1 hr. rating.

Thickness	Widths	Lengths	Edge
⅝"	4'	8' to 12'	T

G-P REGULAR INSULATING GYPSUM BOARD

Regular Insulating Gypsum board with bright aluminum foil laminated to the back surface.

The foil paper provides a continuous vapor barrier on the warm side of the wall.

To have reflective insulation value, the foil must face a minimum air space of ¾". The aluminum foil facing a ¾" minimum space reflects 90% of radiant heat providing insulation qualities equal to ½" of fibreboard insulation (tested by U.S. Bureau

of Standards). Panels must be installed with foil side against the studs.

Thickness	Widths	Lengths	Edge
3/8" 1/2" 5/8"	4'	6' to 16'	T, S, RE

FIRESTOP® INSULATING GYPSUM BOARD

This is the regular insulating gypsum board with the addition to the core of glass fiber for increased fire protection. Through the proper use of this product desired fire-rated assemblies can be achieved.

Thickness	Widths	Lengths	Edge
5/8"	4'	6' to 16'	T, S, RE

G-P REGULAR ETERNAWALL™— VINYL SURFACED GYPSUM BOARD

Standard Line Colors—Fawn, Gold, Buff, Stucco, Tan, Leaf, Yellow Wisp, Snow Drift White, Cherry Design, Walnut Design, Flax Design, Alabaster, Field Grass, Autumn Thatch, Golden Reed and Espana.

This panel has the vinyl surface factory laminated to Regular Gypsum board. Available in a variety of colors and textures, it provides beauty and utility to commercial, institutional and home interiors. Eternawall is strong and resilient. The solid gypsum core is non-combustible. Eternawall color won't fade. The deep linen-textured vinyl surface can be scrubbed without damage to color, texture or design. Because of its ability to take hard wear and to resist stains, Eternawall Gypsum board is ideal for restaurants, hotels, clubs, and hospitals as well as home use. It is also ideally suited for movable partitions.

Thickness	Widths	Lengths	Edge
1/2" (5/8" Special order)	4'	8' (Other lengths available on special order.)	MB

FIRESTOP® ETERNAWALL™— VINYL SURFACED GYPSUM BOARD

This panel has the vinyl surface factory laminated to a Firestop panel which has glass fibers added to the core to give it additional fire resistance. With this technically designed gypsum core, a 1 hour or greater fire rating may be obtained on wall assemblies. Same colors available as with regular Eternawall Gypsum board

Thickness	Widths	Lengths	Edge
1/2" 5/8"	4'	8' (Other lengths available on special order.)	MB

GYPSUM SHEATHING

Treated—G-P Gypsum sheathing consists of non-combustible gypsum rock combined with an asphalt emulsion to provide high resistance to water. All G-P Gypsum sheathing is manufactured to meet A.S.T.M. C79, including requirement for water resistance. This eliminates the need for building paper (except where required by local building code). An **untreated** (non-water resistant) gypsum sheathing is available.

The 2' wide sheathing, applied horizontally, is made with precision formed tongue and groove edges and square edges. There are two types of sheathing, **5/8" Firestop sheathing,** which, combined with 5/8" Firestop wallboard on the interior wall side, meets a 1 hour fire resistance rating, and **1/2" Regular sheathing,** used where no fire resistance rating is required.

Thickness	Widths	Lengths	Edge
1/2" Reg., 5/8" Firestop®	2'	8'	T & G
1/2" Reg., 5/8" Firestop®	4'	8' & 9'	S

GYPSUM *FIRESTC* BACKER BOARD

5/8" Firestop Gypsum Backer is used as a backing for decorative surface treatments of acoustical plasters, tile, plywood and various veneers. A single layer application of 5/8" G-P Firestop Gypsum Backer on both sides of wood or steel framing, enables loadbearing or non-loadbearing wall assemblies to resist temperatures rising to 1700° F. in one hour following the ASTM standard time temperature curve.

Firestop Gypsum Backer consists of a gypsum core with literally miles of high tensile strength glass fibres, firmly bonded to a fibrous gray paper on both sides

Thickness	Widths	Lengths	Edge
1/2" 5/8"	2' & 4'	8' to 16'	S, T & G

G-P REGULAR BACKER BOARD

G-P Gypsum Backer Board is designed for first or base layers in field lamination of gypsum board, for acoustical tile and other compatible materials. Provides low cost, even surfaces for further decorative treatments. It may be applied over loadbearing or non-loadbearing wood or metal framing with nails, screws or staples.

Thickness	Widths	Lengths	Edge
3/8" 1/2" 5/8"	2' & 4'	8' to 16'	S, T & G

PREDEC™ TEXTURED GYPSUM BOARD

This combination of non-combustible gypsum board with factory applied, distinctive, evenly balanced textures is a new development in the construction industry. The textures are baked on and are available in 2 patterns, sand and stucco. The panels are 5/16", 1/2" and 5/8" thick with square edges. The texture is a thermo-set in White, Beige, Gold and Light Green water resistant paint.

This product eliminates job site finishing and installation time. It is impact and abrasion resistant and ideal for residential construction, factory built mobile and modular homes and movable or fixed partitions. It can be cleaned with a damp cloth and mild soap and water. PreDec has a flame spread rating of 20. Samples available on request. This product also available without the texture under the name "Pre-Dec Blanks."

Thickness	Widths	Lengths	Edge
5/16" (1/2" & 5/8" special order)	4'	cut to size	S

SENTINEL™ BOARD

Developed particularly for mobile homes, Sentinel board has a tough, stain resistant, special decorated paper face laminated to the wallboard. It has a 20 flame spread rating and its noncombustibility makes this product highly desirable for mobile homes. Patterns are Oak and Pecan designs.

Thickness	Widths	Lengths	Edge
5/16"	4'	cut to size	S

SHAFT LINER™ SYSTEMS

The shaft liner systems are non-load bearing gypsum board partitions for enclosing elevator shafts, stairs, smoke towers and other vertical openings. They are designed for resistance to air pressure (lateral force) without excess deflection. These systems can reduce weight over 20 lbs. per sq. ft., compared to masonry, are non-combustible and can be erected from one side, eliminating the need for scaffolding. They are also excellent fire rated separation walls.

"T" Spline System: The partition consists of a basic factory or field laminated liner panel 1 5/8" thick by 24" wide which fits into a top metal "J" track and bottom "L" runner. Metal "T" splines separate each panel which is then screw attached to the "T" splines and top and bottom runners. The required facing layers are attached to the liner panel for the solid type, to furring channel for the cavity type, or to metal studs for the chase wall. G-P shaft liner panels are available in lengths up to 16 ft. With splicing and auxiliary bracing, heights beyond 16 ft. are attainable. Various fire resistant ratings in accordance with ASTM E-119 and sound ratings in accordance with ASTM E-90 are available. Fire tests were conducted by UL and Ohio State University.

"I" Stud System: This partition consists of a single shaft liner board 1" thick by 24" wide which fits into a top metal "J" track and bottom "U" track. Metal "I" studs 2 1/2" deep separate each shaft liner board and have opposed tabs 12" o.c. The 1" shaft liner panels are secured by a friction fit between the tabs and the flange of the "I" stud. A cavity space 1 1/2" deep is provided and the cut-outs in the studs facilitate horizontal services. The required 5/8" Firestop facing layers are screw attached to the face of the "I" stud. Height limit varies depending upon gauge metal and depth of stud. Fire resistance rating is two hours based on ASTME-119 test.

Thickness	Widths	Lengths	Edge
1 5/8" or 1" Core plus facing layers	2'	cut to size	S

G-P 1" COREBOARD

1" Gypsum Coreboard is available in two styles.
a. A homogenous core with a tongue and grooved joint.
b. Two layers of 1/2" backer board, laminated.

1" Gypsum Coreboard is used for the core material in various, all-gypsum partition assemblies.

Thickness	Widths	Lengths	Edge
1"	2'	Custom cut up to 14'	S, T & G

G-P SOFFIT BOARD

G-P Gypsum Soffit Board is used on exterior soffits where not exposed directly to the weather. It's an inexpensive soffit material for schools, shopping center malls, apartments and houses. It finishes and decorates like interior gypsum board with no nails or joints showing. It has light blue face paper for identification.

Thickness	Widths	Lengths	Edge
1/2", 5/8"	4'	8'	RE

G-P FIRE FIGHTER GYPSUM BOARD

New product designed for use on roofs, over rafters, and under sheathing and roof covering. Tests prove it blocks roof fires from entering attic and living areas. It has a special core and paper.

Thickness	Widths	Lengths	Edge
1/2"	2'	8'	S

DENS-COTE® GYPSUM PLASTER BASE

A 4' wide, long length, tapered edge, plaster base For use as a base layer for G-P Dens-Cote® veneer plaster. It has a highly absorbent face with pinholed surface.

SGP 0023408

Thickness	Widths	Lengths	Edge
3/8", 1/2" 5/8" Reg. and 1/2" and 5/8" Firestop*	4'	8', 10', 12'	T

DENS-COTE® VENEER PLASTER

One coat and two coat systems give a strong durable finish with maximum speed and minimum material. Apply total thickness of 3/32". Available in smooth or textured finishes. 80 lb. bags.

TAPERED EDGE:

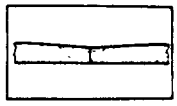

The tapered edge was originally called the "recessed edge" but is now commonly called tapered, because of the incline from the edge to about 2" into the board. This taper allows space for tape and joint treatment to be applied and the completed job will be flat, smooth and monolithic.

SQUARE EDGE:

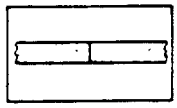

The gypsum board square edge was the original wallboard edge. Initially designed to be a base with a final covering such as wallpaper, paneling, or tile, square edge can be finished with joint compounds to form a clean monolithic wall suitable for paint. Also can be used where an exposed joint is desired.

TAPERED w/ROUND EDGE:

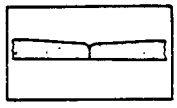

Georgia-Pacific round edge (RE) gypsum board can be used for wall and ceilings in both new construction and remodeling. It is designed to reduce the beading and ridging problems commonly associated with standard type gypsum board. The edge formation provides a stronger, more rigid joint and reduces joint beading or ridging.

BEVELED EDGE:

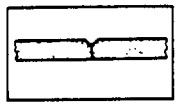

The beveled edge is a suitable edge to give a paneled effect. After fasteners are covered with joint compound the board is ready for paint with grooves exposed.

"T & G" EDGE:

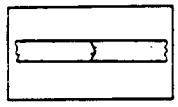

Georgia-Pacific's "tongue and groove" edge is used on 2' wide sheathing and backer boards.

MODIFIED BEVELED EDGE:

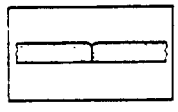

The modified beveled edge is available only on Eternawall™ panels. This particular edge more readily accommodates the vinyl surface decoration, which is delivered completely edge wrapped. The vinyl surface material is available in 15 standard patterns and colors and 15 new colors and textures.

JOINT SYSTEM PRODUCTS

G-P Joint System products are designed to conceal joints and nail heads and "surface-weld" gypsum board panels together. Properly used, these products assure smooth, seamless appearance of walls and ceilings, with joints stronger than the gypsum board itself. Many G-P joint system products come with an **asbestos free** formulation. Check with your nearest G-P Distribution Center.

G-P BEDDING COMPOUND

Bedding Compound is designed to provide maximum adhesion of tape to the joints and for initial application to nail heads and corner bead. It spreads smoothly and may be hand or machine applied. **Coverage:** 15 to 20 lbs. per 1,000 sq. ft. (Used in conjunction with 40 to 45 lbs. of Topping Compound.) **25 lb. bags.**

G-P TOPPING COMPOUND

G-P Topping Compound is specifically designed for the second and third coats over the bedding compound. Since it is used only for topping, the amount of adhesive can be reduced and other materials incorporated which reduce the shrinkage and make it easier to sand and work. Coverage is approximately 40 to 45 lbs. per 1,000 square feet. (Used in conjunction with 15-20 lbs. of G-P Bedding.) **Available in 25 lb. bags.**

TRIPLE DUTY™ JOINT COMPOUND

Triple Duty Gypsum board Joint Compound is a vinyl multipurpose joint system product. A single bag offers taping, topping and texturing. It can be used for all coats in the reinforcing and concealing of joints in gypsumboard construction. The binder, a vinyl, gives this product a wet life of 30 to 60 days duration. This allows premixing in large quantities prior to application. Triple Duty can be applied using standard hand or mechanical tools. There is low shrinkage and it is easily sanded. When the application is completed, the surface is ready for priming and decoration as desired with no further preparation necessary. **Coverage:** 60 lbs. per 1,000 sq. ft. **25 and 50 lb. bags.** Can be used as a Texture. **Coverage:** 12-50 lbs. per 1,000 sq. ft.

G-P READY MIX JOINT COMPOUND

Ready Mix Joint Compound is an easy-working material for embedding the joint reinforcing tape and the filling and finishing of joints in gypsum board construction. Furnished in cans and cartons ready to use, this stable, all-purpose compound is also excellent for use in covering nail heads and forming interior and exterior angles. Ready Mix Joint Compound assures a standard mixture for uniform workability throughout the job. It has a long wet life and will not spoil even when the container is left open. Ready Mix Joint Compound produces an excellent surface for any type of decoration. Ready Mix Topping Compound also available. For best results, the surface should be primed before being decorated. **Coverage:** 5 gal. per 1,000 sq. ft. **Package—1 and 5 gal. cans, 4 gal. cartons.**

G-P ALL PURPOSE JOINT COMPOUND

G-P All Purpose Joint Compound is used for bedding tape, topping, corner bead, nail spotting and texturing. When taping be sure the compound under the tape, and the first coat over the tape is thoroughly dry before applying the next coat over the joints. When used for texturing, for best results, apply a

SGP 0023409

vinyl primer to the entire area before texturing. The texture may be applied with a roller, sponge, brush or can be sprayed, depending on the type of configuration desired. **Coverage:** 60 lbs. per 1,000 sq. ft. **25 lb. bag and packaged 18 lbs. of compound plus 250' roll of tape.**

SPEED SET™

Speed Set Joint Compound makes possible the taping and finishing of all gypsum board joints within a single day. It can be used for all coats. Speed Set is a setting rather than a drying type of compound, and will not shrink once it has set. Comes in two ways—for 1 hour working time, use Speed Set 90, for 2 hour working time use Speed Set 150. **25 Lb. Bag.**

WALL TEXTURES

G-P Wall Texture is an unaggregated texture compound for hand tool or spray application. When applied with a spray, a splatter or orange peel texture is formed. When applied by hand, a stipple, swirl, or brocade texture can be produced.

G-P Wall Texture can be applied immediately after G-P Ceiling overspray wipedown. It is made for fast. volume application. Because of its formulation, G-P Wall Texture matches G-P Ceiling Textures, and allows them to blend together.

Coverage: 12-50 lbs. per 1,000 sq. ft. depending upon texture. **25 Lb. Bag.**

CEILING TEXTURES

G-P Ceiling Textures are designed for spray application over ceilings constructed with gypsum board or concrete. The resulting texture simulates acoustical texture finish.

Vermiculite—A 40 lb. bag of this aggregate is available in 3 particle sizes **(fine, medium and coarse).** An ideal product for concealing surface defects. Coverage: 200-300 sq. ft. per bag. Texture samples available on request.

Polystyrene—A new powder product in a 32 lb. bag. This rich white texture finish has strong adhesion with maximum coverage and excellent hiding qualities. The fragments of this **very rough** texture retain their size and shape during mechanical mixing. Coverage: 200-300 sq. ft. per bag.

Especially designed for volume operations, these products give unsurpassed economy. The texture dries harder and tighter. The texture maintains a high quality white decorative finish, and gives exceptional coverage if used as instructed.

G-P GYPSUM BOARD TAPE

G-P Tape is a full 2" width, "Miracle Crease" spark perforated tape with skived edges and sanded surface both sides. Excellent bonding qualities. Available in 60', 250' and 500' lengths.



Texture	Finish	Bag Size	Water Mix*	Remix	Average Coverage	
					Gypsum board	Concrete
Wall Texture	S†	25 lb.	Add 2½ Gallons	Do not exceed 3½ Gallons	Spray 1,000 sq. ft. Trowel 200 sq. ft.	
Vermiculite Ceiling Texture	FM & C	40 lb.	Add 3½ Gallons	Do not exceed 5 Gallons	Spray 400 sq. ft.	300 sq. ft.
Polystyrene Ceiling Texture	C	32 lb.	Add 6 Gallons	Do not exceed 8 Gallons	Spray 400 sq. ft.	300 sq. ft.

*Mix until dry powder is wetted and well dispersed. Then allow to soak for 20 minutes. Remix and adjust to desired consistency.

If desired, up to 1½ gallons of compatible water based paint may be added, per bag, to impart color.

†S—Smooth (no aggregate) F—Fine M—Medium C—Coarse

SGP 0023410

ETERNAWALL™ GYPSUM BOARD COMBINES GYPSUM BOARD WITH THE BEAUTY OF SHEET VINYL

These fire-resistant panels are factory laminated with a quality, washable vinyl sheet providing a permanent scuff, crack and chip-resistant surface. Colors are fade-resistant and the texture or design will not be impaired when cleaned.

Eternawall panels are available in 16 standard colors; 2 simulated woodgrains plus 14 new vinyl colors and fixtures. The long edge is completely wrapped with vinyl and eased to form a modified beveled edge*.

Georgia-Pacific Firestop® Eternawall™ Gypsum board is available for use when the wall construction requires the gypsum board to be of fire rated construction. Firestop® Eternawall™ has a gypsum board base containing greater glass fiber reinforcement.

SPECIFICATIONS

All vinyl surfaced gypsum board scheduled and/or indicated on the drawings shall be Georgia-Pacific Eternawall™ as manufactured by the Gypsum Division of Georgia-Pacific Corporation. The panel construction shall consist of supported or unsupported vinyl of "wall surfacing grade" factory laminated to G-P Regular or Firestop® Gypsum board. The long panel edges shall be a modified bevel and completely wrapped with vinyl. The colors and patterns shall be as selected from the Eternawall™ Gypsum board Standard Line or special new colors and textures. (See page 34 for colors.)



DEMOUNTABLE PARTITIONS

Demountable wall systems are installed by using any of the appropriate or approved color-matched moldings. To laminate to existing wall surfaces, use G-P Laminating Compound and secure panels mechanically at top and bottom plates. Panels may be applied with adhesive directly to metal studs, wood framing or furring strips.

Swatches are available by writing Georgia-Pacific Corporation, 900 S.W. Fifth, Portland, Oregon 97204.

Thickness: 3/8", 1/2" and 5/8" Regular Gypsum board, 1/2" and 5/8" Firestop® Gypsum board, 1/2" Regular Eternawall™ is the stock thickness.

Standard sizes: 4' x 8', 9' and 10'. Special lengths available upon request in one foot increments from 4' x 7' to 4' x 16'. Special sizes (length and width) available on special order basis.

3/8", 1/2" and 5/8" gypsum board consisting of gypsum core, surfaced on both sides with paper or with a vinyl facing on one side.

Fire Hazard Classification	Basic Board	With Vinyl Facing
Flame Spread	15	25
Fuel Contributed	15	10
Smoke Developed	0	20-50

Classified by Underwriters' Laboratories, Inc.
UL labeled Eternawall available.

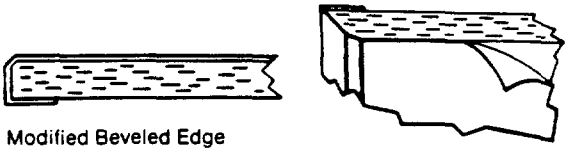

Modified Beveled Edge

Color coated stainless steel nails are available to match all Standard colors and woodgrains. Trim accessories are available in 8' and 10' lengths to match all standard colors and woodgrains.

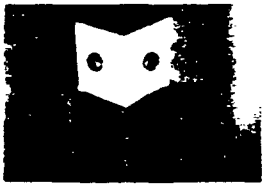

Snap-On Corner Bead



Snap-On Interior Trim

Eternawall™

Gypsum board Surfaced. These fire and sound rated vinyl-surfaced gypsum board systems eliminate the need for battens. Firestop® Eternawall™ is laminated directly to G-P 1/4" incombustible Gypsum Sound Deadening Board. They are not only simple to install but they are inexpensive and provide a very durable wall, and very high STC ratings.

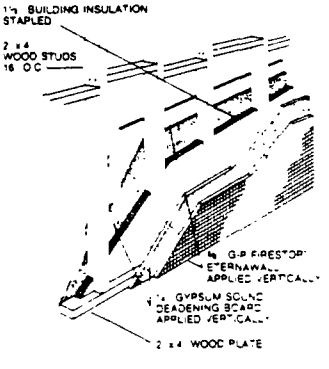

Fire Test U.L. U312
Fire Rating—1 Hour Combustible
STC 50 System #106

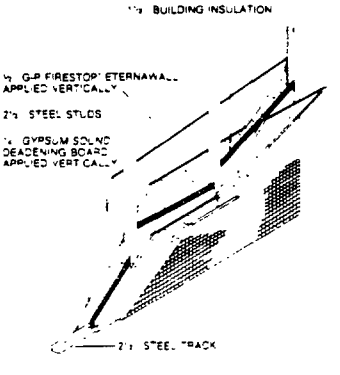

Fire Test U.L. U410
Fire Rating—1 Hour Incombustible
STC 50 System #306

*Insulation not required for fire rating.

SGP 0023411

ETERNAWALL™ VINYL SURFACED GYPSUM BOARD

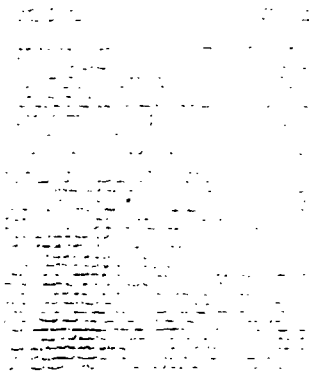

Fawn GP-652
Group I

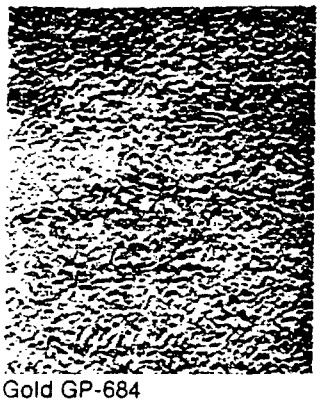

Gold GP-684
Group I

Buff GP-704
Group I

Stucco GP-705
Group I

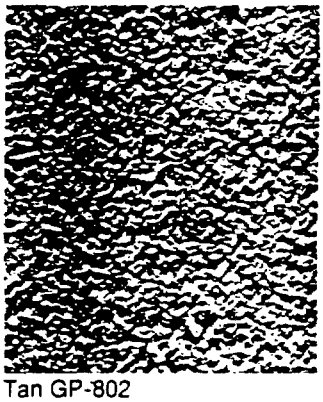

Tan GP-802
Group I

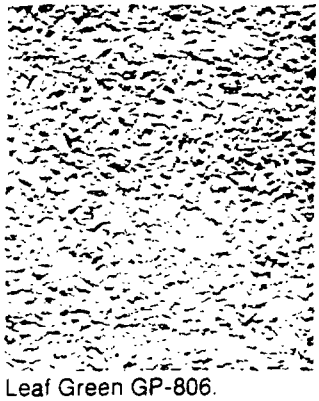

Leaf Green GP-806
Group I

Yellow Wisp GP-807
Group I

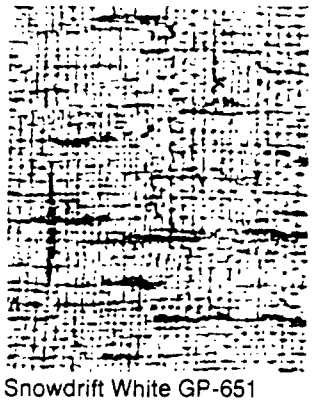

Snowdrift White GP-651
Group II

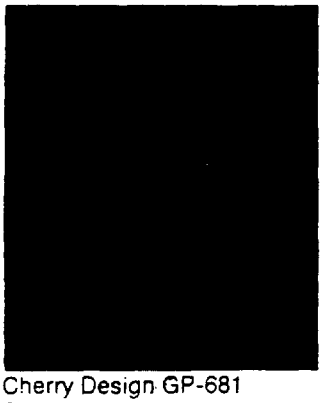

Cherry Design GP-681
Group II

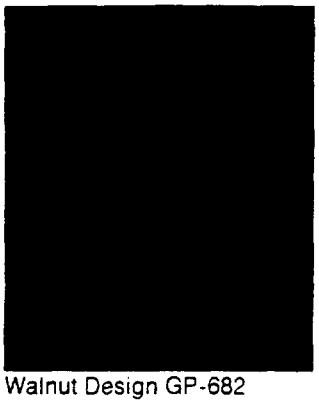

Walnut Design GP-682
Group II

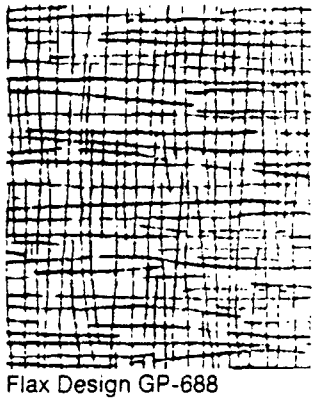

Flax Design GP-688
Group II

Alabaster GP-703
Group II

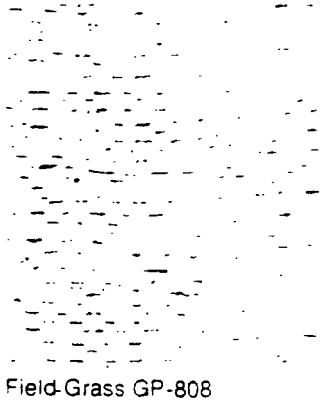

Field Grass GP-808
Group I

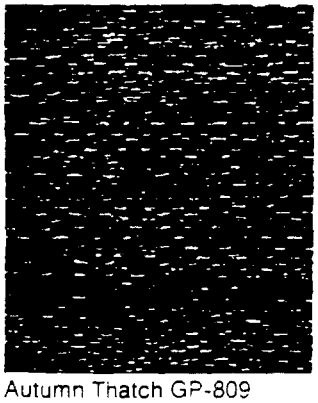

Autumn Thatch GP-809
Group I

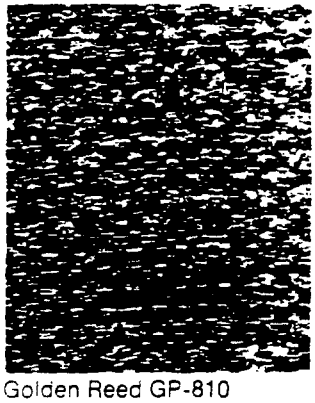

Golden Reed GP-810
Group I

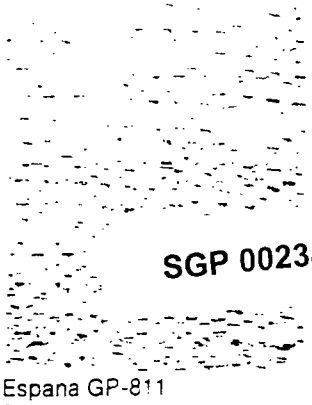

Espana GP-811
Group I

SGP 0023412

U.S. AND CANADIAN SPECIFICATION DIRECTORY – GYPSUM BOARD PRODUCTS

Product	Thickness	Width	Length	ASTM & CSA Standards	USDA Federal Specification
G-P REGULAR GYPSUM BOARD					
Tapered Edge	¼"	4'	6' to 12'	C 36 ■ CSA A82.27	SS-L-30d Type III—Grade R
	⅜"	4'	6' to 16'		
Square, Tapered or Round Edge	½"	4'	6' to 16'		
	⅝"	4'	6' to 16'		
G-P INSULATING GYPSUM BOARD					
Square, Tapered Edge or Round Edge	⅜"	4'	6' to 16'	C 36 ■ CSA A82.27	SS-L-30d Type III—Grade R
	½"	4'	6' to 16'		
	⅝"	4'	6' to 16'		
***ETERNAWALL*™ GYPSUM BOARD**					
Modified Beveled Edge	½"	4'	8' Std.†	C 36 ■ CSA A82.27	SS-L-30d Type III—Grade R or Grade X Class III
	⅝"	4'	8' Std.†		
***FIRESTOP*® GYPSUM BOARD**					
Square, Tapered Edge or Round Edge	½"	4'	6' to 16'	C 36 ■ CSA A82.27	SS-L-30d Type III—Grade X
	⅝"	4'	6' to 16'		
***FIRESTOP*® INSULATING GYPSUM BOARD**					
Square, Tapered Edge or Round Edge	½"	4'	6' to 16'	C 36 ■ CSA A82.27	SS-L-30d Type III—Grade X
	⅝"	4'	6' to 16'		
G-P TILE BACKER BOARD					
Tapered Edge	½"	4'	8', 11'	C630 ■ CSA A82.27	SS-L-30d Type VII Grade R, X, W
	⅝"	4'	and 12'		
G-P GYPSUM SOUND DEADENING BOARD					
Square Edge	¼"	4'	8' Std.†	C442 ■ CSA A82.35	SS-L-30d Type IV—Grade R
G-P BACKER BOARD					
Square or T & G Edge	⅜"	4'	8' Std.†	C 442 ■ CSA A82.35	SS-L-30d Type IV Grade R Grade X
	½"	2'	8' Std.†		
	⅝"	2'	8' Std.†		
***FIRESTOP*® GYPSUM SHEATHING**					
Long-Edges - Square Edge Core-treated or non core-treated	½"	4'	8' & 9'	C 79 ■ CSA A82.27	SS-L-30d Type II Grade R&W (½") or Grade X&W (⅝")
Square or Tongue and Groove Core-treated or non core-treated	½"	2'	8' Std.†	C 79 ■ CSA A82.27	
***DENS-COTE*® PLASTER BASE**	½"	4'	6' to 12'	C 588 ■ CSA A82.27	SS-L-30d Type VI Grade R
	⅝"				
***FIRESTOP*® *DENS-COTE*® PLASTER BASE**	⅝"	4'	6' to 12'	C 588 ■ CSA A82.27	SS-L-30d Type VI Grade X
***DENS-COTE*® PLASTER**				C 587	SS-P-00402b Type VI

Brand	Product	ASTM* Standards	Federal Spec.
G-P	**JOINT SYSTEM MATERIALS**	C 475	SS-J-570a 10/24/66
G-P	***METRO-MIX*™**	C 317	—

†Standard Length—Other Lengths on Order.
*All ASTM Standards—Per Latest Revision.
■All Canadian Standards in Blue

Any questions not answered by the information on this page or available from local sources should be referred to Georgia-Pacific, Gypsum Division, 900 S.W. Fifth, Portland, Oregon 97204.

CC CODE ACCEPTABILITY CERTIFICATION WARRANTY

The assemblies and information in this brochure have been developed based on practical construction methods.

However, since the Georgia-Pacific Gypsum Division does not have any prior knowledge of a specific building design and its construction or the methods of application used with its products, no warranty of performance is made. All tests have been obtained under controlled laboratory testing conditions where environmental variables are reduced to a minimum. In the field, such laboratory conditions are not always met since many other variables may be produced. Laboratory results may exceed field test results but the laboratory tests under controlled conditions are the only logical way to compare the performance of different assemblies.

The Gypsum Division of the Georgia-Pacific Corporation makes no warranty that the performance of assemblies in the field will have a performance equal to or better than that developed in the test.

SGP 0023413

DISTRIBUTION CENTERS

United States

ALABAMA
Birmingham
3400 Ball St.
(205) 841-0415
Huntsville
570 Highway 20 East
Madison, Alabama
(205) 772-9681
Mobile
3451 Georgia-Pacific Ave
(205) 479-0604
Montgomery
4542 Baldwin Ave.
(205) 288-7280

ALASKA
Fairbanks
272 Illinois St.
(907) 452-2183

ARIZONA
Phoenix
4801 West Colter St.
(602) 939-1413
Tucson
450 E. Irvington Rd.
(602) 889-5701

ARKANSAS
Ft. Smith
6901 Jenny Lind Road
(501) 646-4361
Little Rock
3101 Dugan St.
(501) 374-0212
Texarkana
3500 Tennessee Road
(501) 773-4616

CALIFORNIA
Anaheim
1700 Lewis St.
(714) 634-4641
Fresno
5288 East Home Ave.
(209) 251-8471
Los Angeles
14750 Nelson Ave.
City of Industry
(213) 968-5551
Oakland
2300 Polvorosa Ave
San Leandro
(415) 352-5100
Riverside
1450 Citrus Ave.
(714) 684-5353
Sacramento
2951 Orange Grove Ave.
North Highlands
(916) 481-4444
Salinas
1031 Industrial Ave
(408) 758-0913
San Diego
901 West 24th St
National City
(714) 262-9955
San Fernando
7891 Deering Ave
Canoga Park
(213) 887-3211
San Jose
660 East Gish Rd
(408) 297-7800
Santa Rosa
3417 Standish Road
(707) 544-3040

COLORADO
Denver
3900 Uvalda St.
(303) 371-1500

CONNECTICUT
Hartford
776 North Main St
Manchester, Conn
(203) 646-8700
Wallingford
805 North Colony St.
(203) 269-8725

DELAWARE
Wilmington
Rittenhouse Ind. Pk
Terminal Ave. & Christiana
(302) 656-8203

FLORIDA
Ft. Myers
3587 Work Drive
(813) 332-3857
Jacksonville
1333 Haines St
(904) 356-9711
Miami
3201 N.W. 110th St
(305) 688-6603
Orlando
2721 Regent Ave
(305) 293-5781
Pensacola
4601 McCoy Dr
(904) 434-5501
Tallahassee
889 Mabry St
(904) 576-2146
Tampa
3701 East Columbus Dr
(813) 621-1351
West Palm Beach
900 West 15th
Riviera Beach
(305) 844-6371

GEORGIA
Albany
1013 Worth St.
(912) 432-5106
Atlanta
2351 Button Gwinnett Dr.
Norcross, Ga
(404) 449-7400
Augusta
1153 Gordon Highway
(404) 724-0578
Columbus
1401 Blanchard Dr
(404) 327-6521
Macon
7591 N.E. Ind. Blvd
(912) 781-9700
Savannah
Telfair Rd
and SCL Drive
(912) 233-0071

IDAHO
Boise
1675 Commercial Ave
(208) 345-6441

IOWA
Des Moines
5631 Northeast 17th St
(515) 265-5251

ILLINOIS
Chicago
10450 Waveland Ave.
Franklin Park
(312) 678-2990
17040 Lathrop Ave.
Harvey
(312) 928-3338
Bloomington
422 White Oak Rd.
Normal, Illinois
(309) 452-9422
Quad Cities
300 East Fourth Ave
Milan, Ill
(309) 787-8121

INDIANA
Elkhart
225 Collins Rd.
(219) 294-5481
Evansville
520 North Congress Ave
(812) 477-6123
Fort Wayne
8620 Bluffton Road
(219) 747-1691
Indianapolis
1477 South Franklin Road
(317) 357-8754

KANSAS
Wichita
401 West 47th St. South
(316) 522-4831

KENTUCKY
Louisville
2716 Grassland Drive
(502) 491-5440

LOUISIANA
Baton Rouge
1011 Leesville St.
(504) 343-7461
Lafayette
814 S.W. Evangeline
Thruway
(318) 232-2551
New Orleans
7500 Almonaster Ave
(504) 241-2380
Shreveport
2801 Valley View Dr
(318) 686-8771

MAINE
Bangor
Bennett St. & Hildreth
(207) 947-0142
Portland
508 Warren Ave
(207) 797-6564

MARYLAND
Baltimore
6813 Quad Ave
(301) 285-4700
Salisbury
Armstrong Parkway &
Marvel Rd
(301) 546-2161

MASSACHUSETTS
Boston
250 Ballardvale St
Wilmington
(617) 944-6300
Springfield
121 Memorial Drive
Memorial Ind. Park
(413) 781-7030

MICHIGAN
Detroit
11800 Sears Ind. Dr.
Livonia
(313) 522-5100
Grand Rapids
825 Buchanan Ave., S.W.
(616) 241-1626
Saginaw
3720 E. Wash. Rd.
(517) 752-8134

MINNESOTA
Minneapolis
8175 County Line Rd. 18
(612) 425-6811

MISSISSIPPI
Jackson
555 Gulf Line Rd
(601) 939-6420

MISSOURI
Cape Girardeau
Nash Road
(314) 334-0533
Kansas City
1445 Taney St.
North Kansas City
(816) 842-3366
St. Louis
6025 Byassee Dr
Hazelwood
(314) 731-0181
Springfield
3220 East Cherry St.
(417) 869-1641

MONTANA
Billings
600 Daniel St.
(406) 245-3136
Great Falls
901 River Drive S.
(406) 453-5471

NEBRASKA
Lincoln
545 "L" St
(402) 432-7525

NEW HAMPSHIRE
Manchester
300 Gay St.
(603) 627-3881

NEW JERSEY
Clifton
400 Allwood Rd.
(201) 773-1000
Trenton
530 U.S. Route #130
Yardville
(609) 585-1100

NEW MEXICO
Albuquerque
1820 Bellamah N.W.
(505) 242-2791

NEW YORK
Albany
Brown and Ind. Rds
(518) 459-8080
Binghamton
Broome Ind. Pk.
Kirkwood
(607) 775-1120
Buffalo
2585 Walden Ave
(716) 685-2323
Croton-on-Hudson
1 Hudson River Dr.
(914) 271-6201
Nassau
175 Underhill Blvd
Syosset
(516) 921-7200
Rochester
1460 East Henrietta Rd.
(716) 442-1800
Suffolk
Yaphank Ave. and Park St
Yaphank
(516) 924-7400
Syracuse
Midler Park Dr
(315) 437-1201

NORTH CAROLINA
Asheville
Route #2 Azalea Road
(704) 298-5274
Charlotte
3300 Parkside Dr
(704) 394-3171
Greensboro
3005 Flagstone Dr
(919) 275-9431
Raleigh
3501 Tarheel Dr
(919) 876-4430
Wilmington
319 Marlboro St
(919) 799-5200

NORTH DAKOTA
Fargo
204 No. 18th St
Moorehead, Minn
(218) 236-1520

OHIO
Akron
550 Munroe Falls Road
(216) 794-1140
Cincinnati
4710 Dues Dr
(513) 874-4123
Cleveland
19100 Holland Rd.
(216) 234-1376
Columbus
2100 Refugee Rd.
(614) 445-8256
Dayton
5150 Webster St.
(513) 276-5986
Toledo
2815 Hill Ave
(419) 536-3721

OKLAHOMA
Oklahoma City
5519 N.W. Fourth St.
(405) 946-0737
Tulsa
5717 North Mingo
(918) 272-2211

OREGON
Eugene
3445 W. 1st Ave.
(503) 345-4356
Portland
10515 S.W. Allen Avenue
Beaverton
(503) 643-8611

PENNSYLVANIA
Lancaster
3639 Hempfield Industrial
Park
(717) 285-4544
Philadelphia
801 First Ave
King of Prussia
(215) 265-4800
Pittsburgh
Hunker Rd. and Rt. 119
New Stanton
(412) 242-9100
Scranton
150 Pittston Ave
Yatesville-Pittston
(717) 655-2901

RHODE ISLAND
Providence
170 Jefferson Blvd
Warwick
(401) 463-7700

SOUTH CAROLINA
Charleston
Bennett Ind. Park
(803) 554-8191
Columbia
855 Brookwood Dr
(803) 771-7740
Greenville
Hayward Road
(803) 288-2020

SOUTH DAKOTA
Sioux Falls
4501 No. 4th
(605) 339-9300

TENNESSEE
Bristol
100 Paty Indus. Blvd
(615) 968-4121
Chattanooga
201 East 28th St
(615) 698-6076
Knoxville
1301 Mitchell St., N.E.
(615) 546-4441
Memphis
4287 Pilot Dr
(901) 365-2100
Nashville
331 28th Ave., N.
(615) 383-7160

TEXAS
Amarillo
80 Lakeside Drive
(806) 372-5706
Austin
2416 East Sixth St
(512) 478-7406
Beaumont
6550 Oakcrest Drive
(713) 892-8720
Corpus Christi
230 Omaha Dr
(512) 884-3231
Dallas
1800 John Connally Dr
Carrollton
(214) 242-4251
El Paso
6990 Market St
(915) 778-6353
Fort Worth
4747 Mark IV Parkway
(817) 625-2351
Houston
650 Gellhorn Dr.
(713) 675-1721
Lubbock
702 East 44th St.
(806) 747-3626
San Antonio
535 North W. W. White Rd
(512) 333-8110
Tyler
8th Street & Lawhon Ave.
Owentown
(214) 877-3161

UTAH
Salt Lake City
2875 S. 300 W.
(801) 486-9281

VERMONT
Burlington
Pine Haven Shore Road
Shelburne, Vt
(802) 985-2511

VIRGINIA
Lynchburg
Graves Mill Rd.
Timberlake
(804) 239-9241
Norfolk
200 Price St
Virginia Beach
(804) 499-5981
Richmond
Corner Dabney &
Bethlenam Rds
(804) 355-9187

WASHINGTON
Bellingham
829 Cornwall Avenue
(206) 733-8000
Seattle
12815 N.E. 178th St.
Woodinville
(206) 486-0741
Spokane
6815 E. Mission
(509) 926-3030
Tacoma
2302 Ross Way
(206) 383-4578

WASHINGTON, D.C.
Washington, D.C.
8121 Ardwick-Ardmore Road
Landover, Maryland
(301) 322-2270
West Washington, D.C.
11800 Balls Ford Rd.
Manassas, Virginia
(703) 361-5147

WEST VIRGINIA
Charleston
Rock Branch Ind. Pk
Poca, W. Va
(304) 755-8153

WISCONSIN
Madison
723 Mayfair Ave
(608) 241-3874
Milwaukee
5059 North 119th St
(414) 464-7900
Wausau
809 S. 62nd Ave.
(715) 842-0651

Canadian Branches

Georgia-Pacific Building
Materials, LTD
Calgary
8209-30th St. S.E.
Calgary, Alberta
(403) 279-4436
Edmonton
12825-149th St
Edmonton, Alberta
(403) 452-0940
London
100 Thames Street North
Ingersoll, Ontario
(519) 485-4431
Montreal
4650 Notre Dame St. East
Montreal, Quebec
(514) 253-0300
Ottawa
1245 Leeds Avenue
Ottawa, Ontario
(613) 741-1220
Quebec City
48 Abraham Martin St
Louise Basin, Port of Quebec
Quebec City, Quebec
(418) 692-2671
Toronto
173 Carrier Drive
Rexdale, Ontario
(416) 745-2444
Vancouver
916 River Dr.
Richmond, B.C.
(604) 270-7621
Winnipeg
1500 Clarence Avenue
Winnipeg, Manitoba
(204) 453-9001

GYPSUM/SALES OFFICES

MID-ATLANTIC
8121 Ardwick-Ardmore Rd.
Landover, Maryland
(301) 773-3320

MIDWEST
3815 North Carnation
Franklin Park, Illinois
(312) 678-4400

NORTHEAST
400 Allwood Road
Clifton, New Jersey
(201) 773-4800

GRAND RAPIDS DISTRICT
P.O. Box 1649
Grand Rapids, Michigan
(616) 453-2416

SOUTHEAST
P.O. Box 906
Norcross, Georgia
(404) 449-7600

SOUTHWEST
1800 John Connelly Dr.
Carrollton, Texas
(214) 242-4251

WESTERN
P.O. Box 24373
Oakland, California
(415) 483-8570

GYPSUM EXPORT DEPT
226 South 16th Street
Philadelphia, Pa
(215) 564-7955

Georgia-Pacific

900 S.W. Fifth Avenue
Portland, Oregon 97204

SGP 0023414