Monsanto COMPANY

LOCATION SAUGET, ILL

TUBULAR EXCHANGER SPECIFICATION

~~PROJ~~/DEPT 811.00

PLANT WGK

EQUIP. NO. 2-427

AUTH NO. 1800 AREA NO. 02

BY JP BLANKENSHIP DATE 1-31-68

APPD SHEET 1 OF 4

NAME OFF GAS CONDENSER

NO. SHELLS PER UNIT 1

NO. UNITS REQUIRED 1

SIZE: DIAMETER, IN. | TUBE LENGTH, FT | AREA (OUTSIDE TUBES) SQ FT

TYPE EXCHANGER FIXED TUBESHEET * ☐ HOR ☒ VERT

	MATERIAL				MAX ALLOW. WORKING PRESS.	CORR. ALLOW.	CODE STAMP
SHELL SIDE	SHELL C.S.	TUBE SHEET C.S			150 PSIG @ 500 °F	1/16 IN.	☒ YES ☐ NO
TUBE SIDE	TUBES C.S.	HEADS C.S			150 PSIG @ 500 °F	1/16 IN.	☒ YES ☐ NO

MONSANTO STANDARD EXCHANGERS FILL IN THE FOLLOWING AND ATTACH SELECTED STANDARDS. (SEE D4.1 STD 1 "SELECTION GUIDE" FOR ADDITIONAL INFORMATION.)

	SHELL	HEADS		OPTION[1]
DIMENSIONAL DETAILS	STD	STD	NAME PLATE	D4.1 STD 31
MATERIAL SPECIFICATION	D2.1 STD 3	D2.1 STD 3	SUPPORTS **	STD
FABRICATION SPECIFICATION	D2.2 STD 3	D2.2 STD 3	EXPANSION JOINT	STD
FLANGE DETAILS	D4.1 STD 12	D4.1 STD 12	CHEM CLEAN CONNECTIONS	STD
HEAT TREATMENT	STD	STD	PAINT (EXTERNAL)	K1.3 STD 1300
	STD	STD		STD
	STD	STD		STD
	STD	STD		STD

[1] Enter option here or on standard as directed by the standard.

OTHER EXCHANGERS

DRAWING NUMBER | REQUIRED SURFACE AREA, SQ FT

DESIGN PRESSURE: SHELL SIDE 150 PSIG @ 500 °F | TUBE SIDE 150 PSIG @ 500 °F

DESIGN CODE OR SPECIFICATION ASME UPV SECT VIII & TEMA 'C' (1959 W/AMENDMENTS)

SHELL: DIA, IN. 20 OD | THICKNESS, IN. 0.1500 | PIPE SCH 30 | NO. PASSES 5

TUBES: NO. 304 | DIA, IN. 3/4 OD | WALL THK, IN. 0.083 | BWG | ☐ AVER ☐ MIN | LENGTH, FT 8

☐ WELDED ☒ SEAMLESS | TUBE ATTACHMENT:

TUBESHEET: NO. PASSES 4 | PITCH, IN. 15/16 | PATTERN △ ☒ □ ◇ | O.T.L., IN. | THK, IN.

BAFFLES - CROSS: NO. *** | CUT 43 % ☐ HOR. ☒ VERT. ☐ 45° | PITCH, IN. | ☐ SUPP. ONLY | THK, IN.

LONGITUDINAL: NO. None | TYPE | THK, IN.

IMPINGEMENT: None | TIE RODS: NO. | DIA, IN.

SHELL COVER: BONNET | CHANNEL

FLOATING HEAD COVER:

CONNECTIONS:	IN - SIZE AND RATING	OUT - SIZE AND RATING	VENT	DRAIN
SHELL SIDE	12"-SCH 80 - 150# FLG	8"-SCH 80 - 150# FLG		
TUBE SIDE	6"-SCH 40 - 150# FLG	6"-SCH 40 - 150# FLG		

INSTRUMENT CONNECTIONS:

BOLTING: EXTERNAL | INTERNAL

GASKETS MATERIAL: SHELL SIDE | TUBE SIDE

SHOP PAINT:

WEIGHT: SHELL, LBS | BUNDLE, LBS | FULL OF WATER, LBS

REMARKS (CHEM. CLEAN CONN., SUPPORTS, EXP. JOINT, ETC.):

* STANDARD MONSANTO EXCHANGER SPEC. # D4.2 STD 118 & D4.2 STD 158

** VENDOR'S STANDARD FOR LUG SUPPORTS RESTING ON TOP OF AND BOLTED DOWN TO STEEL BEAM APPROX. HALF WAY OF EXCHANGER SHELL, DIMENSIONS THAT MUST HOLD

PAGE 3 OF 4

*** CROSS BAFFLES SEGMENTAL TYPE WITH 20" SPACING.

REV NO.	REVISION	BY	DATE	APPD	DATE	VENDOR
1						
2						P. O. NO.
3						PRICE

ES 58 (1/66)

PCB-ARCH-EXT0372303

Monsanto COMPANY

TUBULAR EXCHANGER PERFORMANCE DATA

PROJ/DEPT 811.00

EQUIP. IDENT NO. 4-421
AUTH NO. 1800 PLANT WGK
BY RS YATES DATE 1-25-68
APPD SHEET 2 OF 4

LOCATION AT 28FT LEVEL

NAME OFF GAS CONDENSER NO. UNITS REQD

FUNCTION TO REDUCE TEMPERATURE OF GAS STREAM FROM 100°C TO 40°C. TO CONDENSE AND CON. BIPHENYL AND AROCLOR.

OPERATION CONTINUOUS WHEN CHLORINATORS ARE OPERATING.

MATERIALS HANDLED	MWT	FROM CONT 42 BAND	FROM BATCH PLANT	TOTAL IN	TOTAL OUT	
CHLORINE	70.9	42	49	91	91	
AIR	29	615	905	1520	1520	
HYDROGEN	2	5	1	6	6	
HCl GAS	36.5	2149	2851	5000	5000	
Ø AND 1221 MIX		88	112	200		200
		2899	3918	6817	6617	300

PERFORMANCE OF ONE UNIT

		SHELL SIDE IN	SHELL SIDE OUT		TUBE SIDE IN	TUBE SIDE OUT
FLUID		HCl Gas, Biph Vapor, Aroclor			Water	
TOTAL FLOW	LB/HR		FOG	COND	120 000	
VAPOR	LB/HR	100	84	16	—	—
LIQUID	LB/HR	100 ENTR	100 ENTR		120 000	120 000
NON-CONDENSABLES	LB/HR	6617	6617		—	—
MOLECULAR WEIGHT		35.4	35.4		—	—
DENSITY	LB/CU FT	.0097	.0099		62.5	—
VISCOSITY	CP	.0183	.0154		1.07	—
SPECIFIC HEAT	BTU/LB, °F	.235	.235		1.00	—
THERMAL COND.	BTU/HR, FT, °F/FT	.011	.0089		.35	—
LATENT HEAT	BTU/LB	—	—		—	—
TEMPERATURE	°F	212	104		96.5	97.0
OPERATING PRESS.	PSIG	10			10	
VELOCITY	FT/SEC	—	—		3.8	3.8
NUMBER OF PASSES		5				
PRESSURE DROP	PSIG	ALLOW. —	CALC 0.55		ALLOW. —	CALC 3.7
FILM COEFFICIENT	BTU/HR, °F, SQ FT	14.6			677	
FOULING RESISTANCE	HR, °F, SQ FT/BTU	.003			.004	

TRANSFER COEFFICIENT BTU/HR, °F, SQ FT | CLEAN — | DESIGN 12.6 | MINIMUM —

HEAT EXCHANGED BTU/HR 220 000 | MTD (CORR.), °F — | EFF SURFACE, SQ FT —

SURFACE PER UNIT: CALCULATED, SQ FT 302 | PROVIDED, SQ FT 438 | OVER 45 %

SHELLS PER UNIT: NO. 1 | SIZE 20" | TYPE TEMA "C"

HORIZONTAL ☐ VERTICAL ☒ | CONNECTED IN ☐ PARALLEL ☐ SERIES ☐ STACKED

CONSTRUCTION

SHELL SIDE: DESIGN PRESSURE, PSIG 150 | DESIGN TEMP, °F 500 | CORR. ALLOW., IN. 1/16

TUBE SIDE: DESIGN PRESSURE, PSIG 150 | DESIGN TEMP, °F 500 | CORR. ALLOW., IN. 1/16

SHELL: DIAMETER, IN. 19 ☐ OD ☒ ID | MAXIMUM ALLOWABLE BUNDLE DIAMETER, (O.T.L.), IN. —

BAFFLES: TYPE SEGMENTAL | SPACING, IN. 20 | CUT, 43 % ☒ VERTICAL ☐ HORIZONTAL ☐ 45°

LONGITUDINAL BAFFLE NO | IMPINGE BAFFLE ☐ YES ☒ NO

TUBES: NO. 304 | OD, IN. 3/4 | LENGTH, FT 8 | THK, IN. .083 | PITCH, IN. 15/16 △ ◁ □ ◇

MATERIALS

SHELL	CARBON STEEL SCH 30	TUBE SHEET	CARBON STEEL
TUBES	CARBON STEEL - SEAMLESS SA 83 GR "A"	HEADS	CARBON STEEL

REMARKS (VENT, DRAIN, INST CONN, INSULATION, CHEM CLEAN NOZZLES, ETC.):

CONSTRUCTION MUST CONFORM TO TEMA CLASS "C" - 1959 WITH AMENDMENTS
SEE SPEC 2.1 STD 3 AND SPEC 2.2 STD 3
DESIGN - COMPUTER CASE 2 1/23/68 E0003

REV NO.	REVISION	BY	DATE	APPD	DATE
1	DESIGN APPROVED	RSY	1-25-68		
2					
3					

ES 57 (7/67)

PCB-ARCH-EXT0372304

EQUIPMENT MANUAL PAGE 3 OF 4

TUBULAR HEAT EXCHANGERS

20" 150 LB CARBON STEEL FIXED TUBESHEET

Shell Details

ISSUE NO.	REF	
1		MANUAL D
DATE 12/61		SECTION 4
		PART 2
		STD NO. 118
		PAGE ← OF →

TUBE LENGTH	TUBE TYPE (14 GAUGE)	BAFFLE SPACING
☒ 8 FOOT ☐ 16 FOOT	☐ SEAMLESS ☐ WELDED	☐ 5" ☐ 10" ☐ 20"

IMPINGEMENT BAFFLE	NOZZLE FLANGES (SEE D4.1 STD 12)
☐ YES ☒ NO	☒ MFRS OPTION ☐ OTHER-TYPE

INSTRUMENT CONNECTIONS (NOTE 3)	DESIGN CONDITIONS
☐ THREADED ☒ FLANGED	150 PSI @ 500 F SHELL AND TUBE SIDES

PROJECT NO. CEH 1800

ITEM NO. 2-427

EQUIP. NO. —

7' 11¼" for 8' 0" Tubes

15' 11¼" for 16' 0" Tubes

BAFFLE SPACING	BAFFLE THK	WIDTH "H"	NUMBER OF BAFFLES 8' 0" TUBES	NUMBER OF BAFFLES 16' 0" TUBES
5"	1/16"	14¾"	15	35
10"	3/16"	12¼"	6	18
20"	¼"	10¾"	4	
20"	¼"	10¾"		9

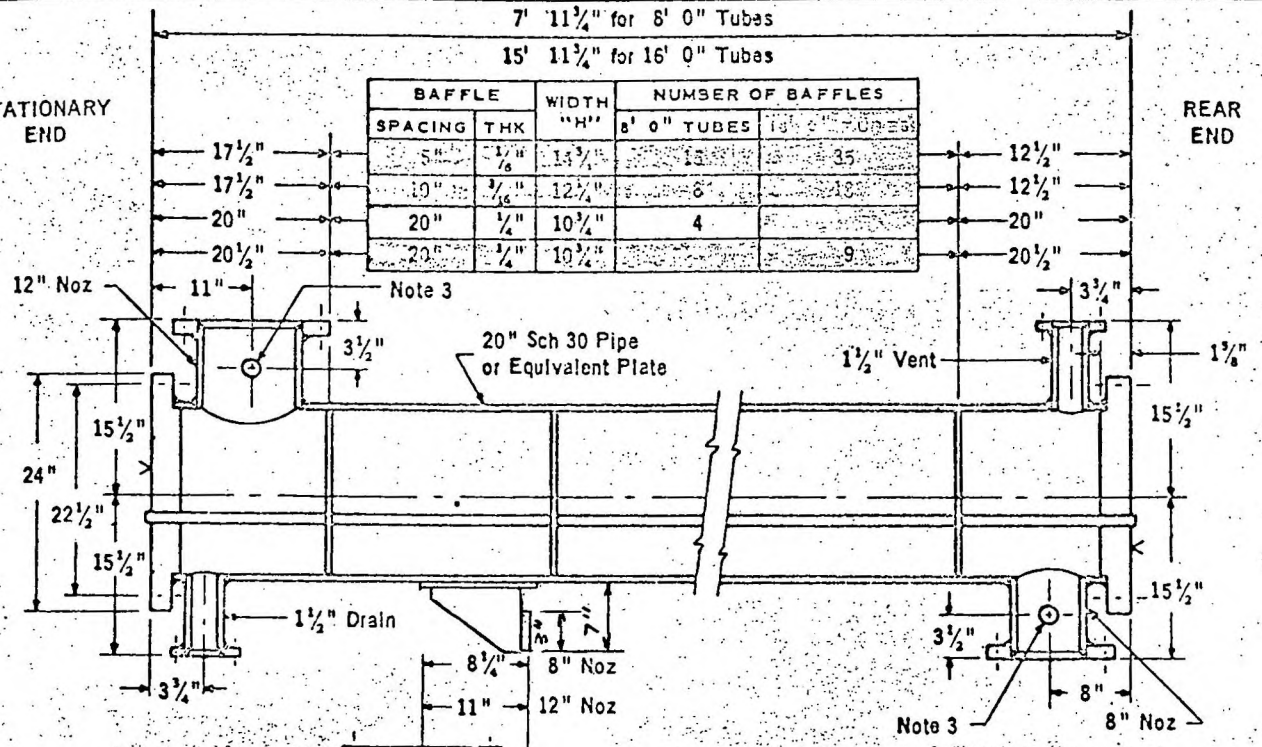

NOZZLE DETAIL

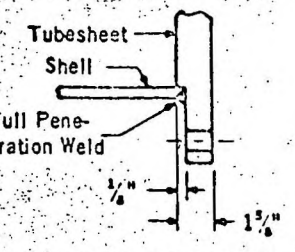

SHELL-TUBESHEET JOINT

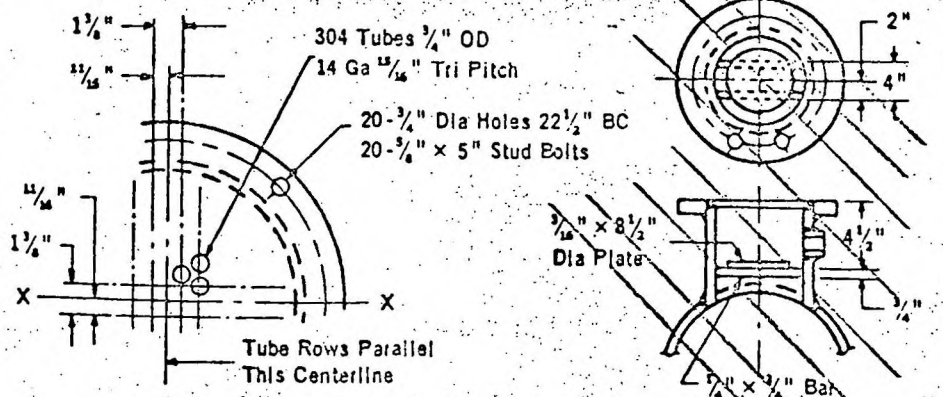

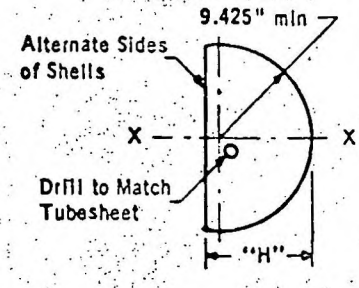

TUBESHEET LAYOUT IMPINGEMENT BAFFLE FOR 12" NOZZLE SHELL BAFFLES

1. All tubesheet gasket surfaces including pass partition webs shall have a machined finish, surface roughness approximately 125 micro inches.
2. Flange bolt holes shall straddle center lines.
3. 1" ips instrument connections. 3000 psi full coupling or 150 lb flanged nozzle. See exchanger data above.
4. All nozzle pipe shall be Sch 80.
5. All nozzle flanges ASA standard 150 psi drilling.

ACKNOWLEDGMENTS ORG DIV: ENGRG STDS JOB NO. 60-13

LATEST ADDITIONS OR REVISIONS ARE SHOWN BY | | OR OUTLINING. DELETIONS ARE SHOWN BY ≈≈≈.

MANUALS: A, B, C, D (X), G, F, J, M, N, K, L, M, N, O, P, Q, R, S, T

LOCATIONS: STDS, STAF, SUBS

AGRI. DIV A: 41, 42

INORG DIV A: 07, 08, 10, 11, 17, 18, 26, 29, ES

LION OIL DIV: 44

ORG DIV A: 01, 03, 06, 09, 30, END

PETRO.

PLASTIC DIV: 12, 13, 27, 31, 34, 38

AT LOCATION, MAY AFFECT INDICATED DIVISION-WIDE APPROVAL OR ACCEPTANCE.

PCB-ARCH-EXT0372305

STANDARDS

EQUIPMENT MANUAL
TUBULAR HEAT EXCHANGERS

Page 4 of 4

20" 150 LB CARBON STEEL FIXED TUBESHEET

Bonnet Details

ISSUE NO.	REF.	
1	MANUAL	D
	SECTION	4
	PART	2
DATE 12/61	STD NO.	158
	PAGE 1 OF 1	

NUMBER OF PASSES: ☐ ONE ☐ TWO ☒ FOUR

BONNET TYPE: STATIONARY END ☒ TYPE I ☐ TYPE II; REAR END ☒ ~~TYPE I~~ TYPE II

NOZZLE FLANGES (SEE D4.1 STD 12): ☒ MFRS OPTION ☐ OTHER-TYPE _____

BONNET FLANGES (SEE D4.1 STD 12): ☒ MFRS OPTION ☐ OTHER-TYPE _____

INSTRUMENT CONNECTIONS AND DRAINS (NOTE 5): ☐ THREADED ☐ FLANGED

PROJECT NO. CEA 1800

ITEM NO. 2-427

EQUIP. NO. —

DIMENSIONS APPLICABLE TO ALL BONNETS

Bonnet Pipe Size, OD	20"	Flange Bolt Circle	22½"
Flange OD	24"	No. & Size Bolt Holes	20-¾"

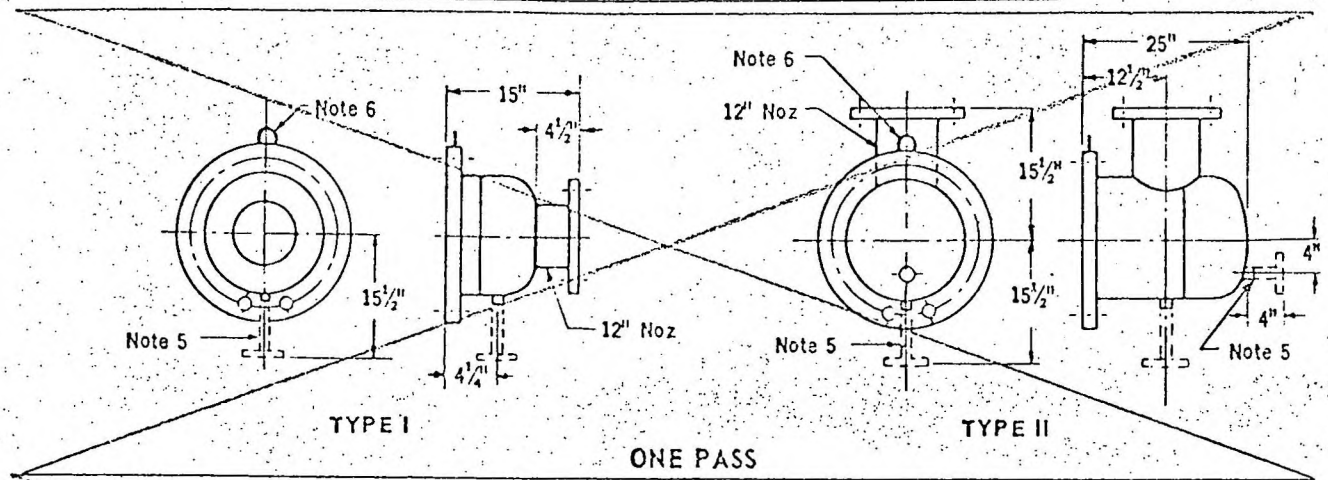

ONE PASS

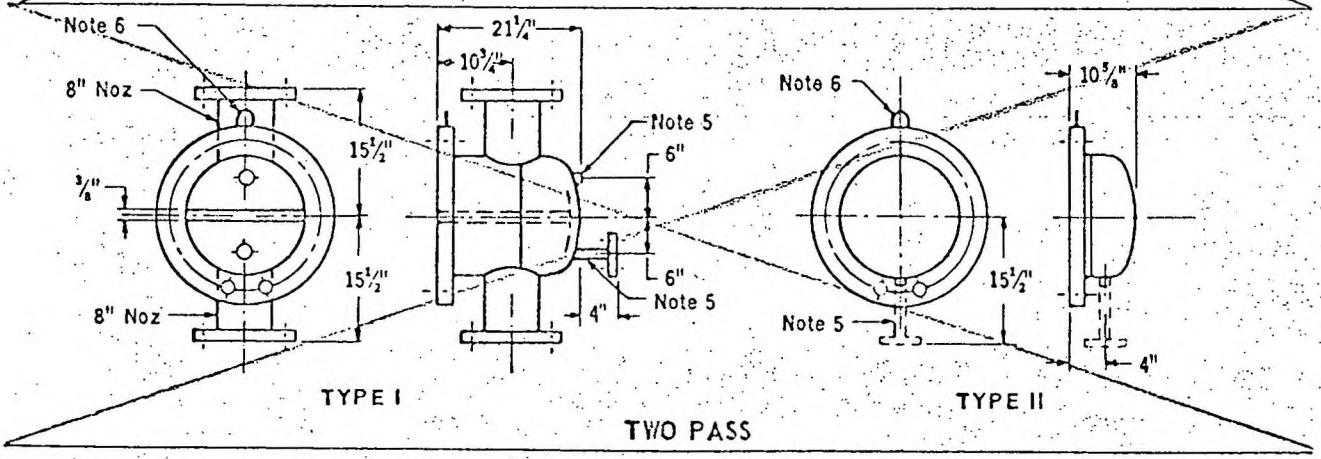

TWO PASS

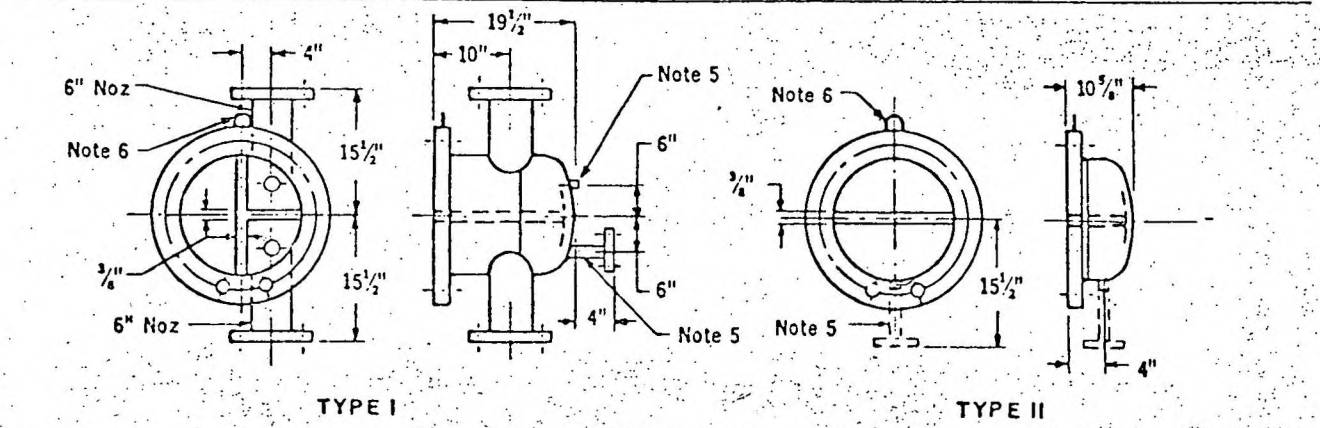

FOUR PASS

1. Design pressure 150 psi at 500 F.
2. Bolt holes shall straddle center lines.
3. All nozzle flanges ASA standard 150 psi drilling. Pipe for 1" and 1½" nozzles shall be Sch 80, for 2" and larger Sch 40.
4. Pipe and caps for bonnets shall be Sch 30 or rolled or formed plate of equivalent thickness.
5. 1" ips instrument connections and drains. 3000 psi full coupling or 150 lb flanged nozzle. See exchanger data above.
6. Lifting loop ⅜" dia rod, 1¼" high × 1½" wide inside dimensions.

ACKNOWLEDGMENTS ORG DIV: ENGRG STDS JOB NO. 60-13.

LATEST ADDITIONS OR REVISIONS ARE SHOWN BY | | OR OUTLINING. DELETIONS ARE SHOWN BY ≈≈≈.

MANUALS: A, B, C, D, E, F, G, H, K, L, M, N, O, P, Q, R, S, T

LOCATIONS: STDS, STAF, SUBS

AGRI.: DIV 41, 42

INORG: DIV 07, 08, 10, 11, 17, 18, 25, 29, ES

LIONOIL: DIV 44

ORG: DIV 01, 03, 05, 09, 30, ENG

PETRO.

PLASTIC: DIV 12, 19, 27, 31, 34, 35

"A" INDICATES APPROVAL OR ACCEPTANCE AT LOCATION. "A" AT "DIV" INDICATES DIVISION-WIDE APPROVAL OR ACCEPTANCE.