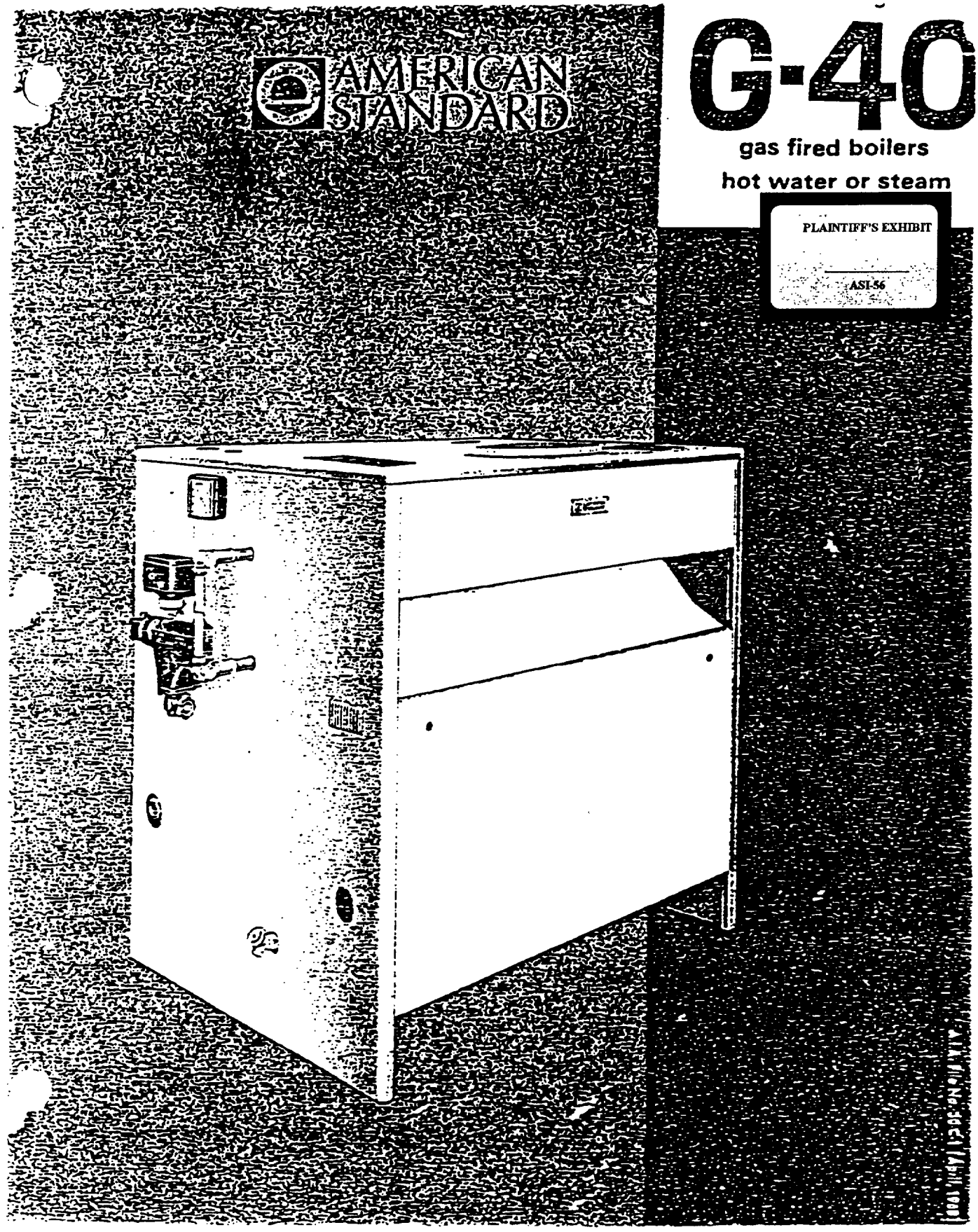
AMERICAN STANDARD
G-40
gas fired boilers
hot water or steam
PLAINTIFF'S EXHIBIT
ASI-56

new G-40 gas boiler—reduces costs and installation time

The new G-40 gas boiler by American-Standard is suitable for installation in larger residences and small apartment and commercial buildings. Designed for both hot water and steam installations, it can be furnished with a tankless type, internal, domestic water heater for either application. An attractive two-tone boiler jacket gives the G-40 a clean, streamlined appearance.

Ruggedly constructed of durable cast iron, the new G-40 is available in 3 to 10 section sizes with A.G.A. design certified outputs from 120,000 to 540,000 btu/hr. All sections are tested for 50 psi water working pressure. On-site assembling time can be decreased by ordering up to 10 sections pre-assembled, with or without factory-installed tankless heater. An exclusive built-in air eliminator—the ELIMINAIRE—is furnished on all boilers, specifically for hot water installations, saving the additional expense of an external device.

The G-40 is provided with two 3" top flow tappings and two 2½" return flow tappings to allow flexibility in designing system piping when the G-40 is installed in confined areas. For further convenience, complete manifold and all controls are shipped factory assembled. Self-energizing controls and electronic controls are available as options.

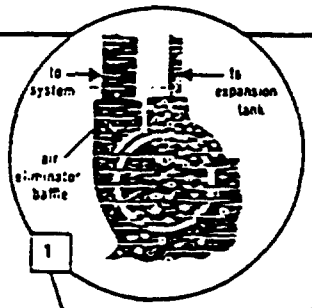

1—Eliminaire®—is a patented cost-saving feature of the G-40. This unique built-in air eliminator is integrally cast into the left hand end section. Furnished in all boilers, specifically for hot water installations, the ELIMINAIRE baffle diverts rising air bubbles into a tapping for connection to the expansion tank. No external device is required to separate air and water—thus reducing both costs and installation time..

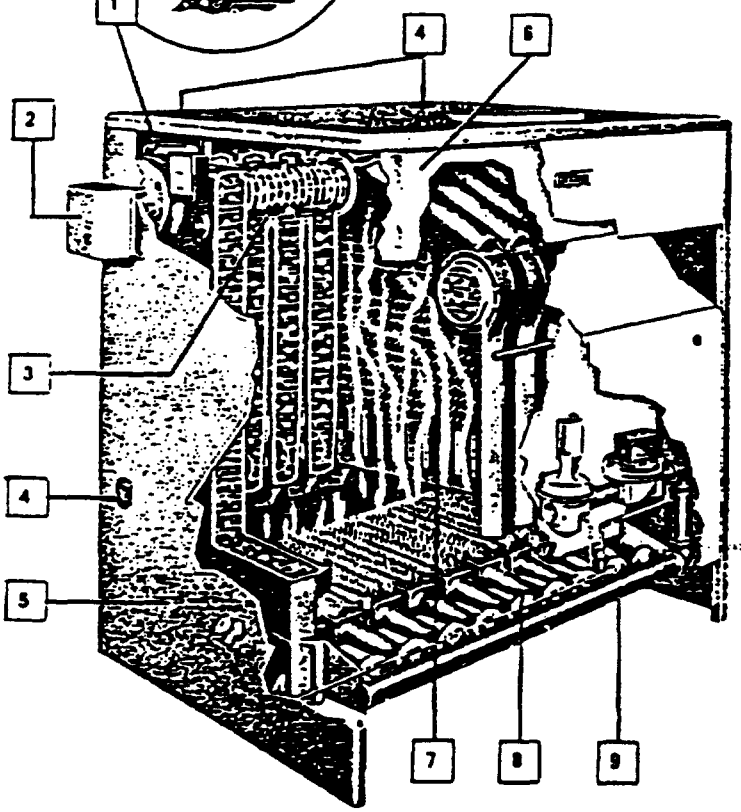

2—controls—mounted on front and left side of boiler for easy adjustment and maintenance. Optional electronic controls and self-energizing controls available.

3—water heater—large, finned copper coil tankless type available for steam or water installations. Inserted where hottest water is in contact with heater coil.

4—tappings—two 3" supply (top) and two 2½" return tappings (side) simplify piping hook-up.

5—jacket—sturdy steel with smart beige and brown finish, modern radius corners. Inner surfaces protected with heavy glass fiber insulation—prevents wasteful heat loss, keeps jacket cool.

6—built-in draft hood—completely enclosed in jacket; eliminates unsightly protrusion in rear of boiler.

7—cast iron sections—multiple pin-like projections for maximum heat extraction. Tested for 50 psi water working pressure. End sections designed with extended legs to eliminate need for separate base.

8—burners—precision made and factory tested to essure quiet, efficient operation with all gases. Cast iron, drilled port burners supplied for natural and mixed gases. Cleanable ribbon burners standard for LP gas.

9—factory assembled manifold and controls—only requires attachment to boiler. Completely enclosed by jacket.

ELIMINAIRE® is a trademark of AMERICAN STANDARD Inc.

G-40 ratings (natural, mixed and LP gases)

boiler number	no. of sections	no. of burners	ier installations from sea level to 2000 ft. ■ A.G.A. ratings input (Btu/hr)	A.G.A. ratings output (Btu/hr)	net I=B=R ratings ▲ water (Btu/hr)	net I=B=R ratings ▲ steam (sq. ft.)	net I=B=R ratings ▲ steam (Btu/hr)	chimney diameter (inches)	chimney height (feet)
G-403	3	2	150,000	120,000	104,300	375	90,000	6	15
G-404	4	3	225,000	180,000	156,500	563	135,000	7	15
G-405	5	4	300,000	240,000	208,700	750	180,000	8	15
G-406	6	5	375,000	300,000	260,900	938	225,100	9	15
G-407	7	6	450,000	360,000	313,000	1125	270,100	10	15
G-408	8	7	525,000	420,000	365,200	1313	315,100	10	15
G-409	9	8	600,000	480,000	417,400	1500	360,100	12	15
G-4010	10	9	675,000	540,000	469,600	1688	405,100	12	15

■ For altitudes above 2000 ft., ratings should be reduced at the rate of 4% for each 1000 ft. above sea level.

▲ Net I = B = R ratings shown are based on a piping and pick up allowance of 1.333 for steam and 1.15 for water. American-Standard should be consulted before selecting a boiler for installations having unusual piping and pick up requirements.

G-40 tankless heater ratings

boiler number	100°F rise in temperature with 200°F boiler water temperature (gallons per minute) heater no. 218 water	heater no. 218 steam	heater no. 222 water	heater no. 222 steam	heater no. 226 water	heater no. 226 steam	heater no. 232 water	heater no. 232 steam	heater no. 445 water	heater no. 445 steam
G-403	4	3	—	—	—	—	—	—	—	—
G-404	4	3½	4½	4	—	—	—	—	—	—
G-405	4	3½	4½	4	6	5½	—	—	—	—
G-406	4	3½	4½	4	6	5½	—	—	—	—
G-407	4	3½	4½	4	6½	6	7½	7	—	—
G-408	4	3½	4½	4	6½	6	8	7½	9	8½
G-409	4	3½	4½	4	6½	6	8	7½	9	8½
G-4010	4	3½	4½	4	6½	6	8	7½	9	8½

NOTE: Domestic Hot Water Connection Sizes – ½" for heater nos. 218, 222, 226, 232 and ¾" for no. 445.

G-40 gas boilers by American-Standard have ratings approved by the Institute of Boiler and Radiator Manufacturers. The boilers are constructed to the specifications of the American Society of Mechanical Engineers and are design certified by the American Gas Association for all gases. The G-40 bears the I=B=R, A.S.M.E. and A.G.A. symbols. All sizes of the G-40 are available in models for forced and gravity hot water, and steam systems.

sample specification for G-40

Contractor shall furnish and install, as indicated on plans, ...gas fired boiler(s), having an input of.....Btuh and a gross output of.....Btuh when fired with..... gas. Boiler(s) shall be constructed of cast iron in accordance with A.S.M.E. requirements for low pressure heating boilers and bear the A.S.M.E. symbol. Boiler(s) shall be A.G.A. design certified and have I=B=R approved ratings. Boiler(s) shall be furnished with an air elimination device integrally cast into the left hand end supply tapping. Boiler(s) shall be composed of cast iron sections with vertical flues and furnished with one atmospheric drill port or removable ribbon burner per flueway. Boiler(s) shall be supplied by manufacturer with one main automatic diaphragm gas valve, safety pilot with thermocouple and additional lighting pilots as required, one gas pressure regulator (except for L.P. gas), high limit control, and integral canopy and drafthood. Water or steam trim as required.

Boiler(s) shall be supplied with internal type tankless heater capable of supplying.....gallons per minute at a 100°F rise in temperature.

minimum piping recommendations

hot water

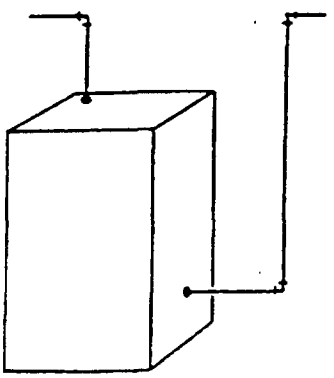

boiler number	gravity		forced	
	supply (in.)	return (in.)	supply (in.)	return (in.)
G-403	2	2	1¼	1¼
G-404	2	and	1¼	1¼
G-405	2½	2½	1½	1½
G-406	(2)-2	(2)-2	2	2
G-407	(2)-2	(2)-2	2	2
G-408	(2)-2	(2)-2	2	2
G-409	(2)-2½	(2)-2½	2½	2½
G-4010	(2)-2½	(2)-2½	2½	2½

NOTE: Left hand supply connection featuring the ELIMINAIRE is used on water boilers. Limit control should also be placed in the left hand section. Where both outlets and return are used on gravity systems, make respective supply and return connection at opposite ends of the boiler.

steam

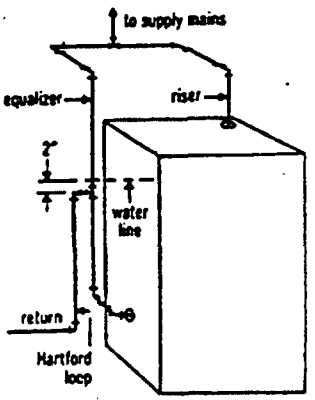

boiler number	riser (in.)	return (in.)	header (in.)	equalizer (in.)
G-403	2	1	—	1½
G-404	2½	1	—	1½
G-405	2½	1	—	1½
G-406	3	1¼	—	1½
G-407	3	1¼	—	1½

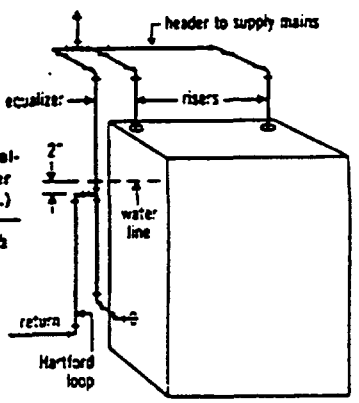

boiler number	riser (in.)	return (in.)	header (in.)	equalizer (in.)
G-408	(2)-2½	1½	4	1½
G-409	(2)-2½	1½	4	2
G-4010	(2)-3	1½	4	2

gas control and connection sizes; pertinent data

boiler number	water content (pounds)		approx. weight (pounds)	size of manifold (inches)	pressure regulators (inches)		automatic gas valve, gas connections and manual shutoff valve sizes (inches)		
	water	steam		nat., mxd. & LP gases	nat.	mxd.	nat.	mxd.	LP
G-403	220.8	164.4	858	1¼	½	¾	½	¾	½
G-404	281.0	209.9	1027	1¼	¾	¾	¾	¾	½
G-405	341.2	255.4	1195	1¼	¾	1	¾	1	½
G-406	401.4	300.9	1370	1¼	1	1	1	1	½
G-407	461.6	346.4	1544	1¼	1	1¼	1	1¼	¾
G-408	521.8	391.9	1713	1¼	1	1¼	1	1¼	¾
G-409	582.0	437.4	1880	1¼	1	1¼	1	1¼	¾
G-4010	642.2	482.9	2050	1¼	1¼	1¼	1¼	1¼	¾

■ Pressure regulator not furnished for LP gases.

AMERICAN STANDARD
PLUMBING & HEATING DIVISION

dimensions for drafthood outlets

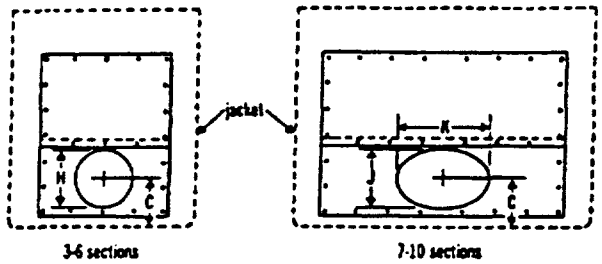

boiler number	drafthood outlets dimensions (inches) C	H dia.	J	K	flue pipe diameter (inches)
G-403	6¾	5⅞	—	—	6
G-404	6¾	6⅞	—	—	7
G-405	6¼	7⅞	—	—	8
G-406	6¼	8⅞	—	—	9
G-407	5¾	—	8	11½	10
G-408	5¾	—	8	11½	10
G-409	6¼	—	9	14⅛	12
G-4010	6¼	—	9	14⅛	12

dimensions for inlets and outlets

boiler number	inlets—outlets dimensions (inches) A	B	C	D	E	F	L
G-403	8¼	7⅛	6¾	9½	2⅛	6	15⅛
G-404	10½	10⅛	6¾	14	3⅛	7	20⅛
G-405	12¾	12⅛	6¼	18⅛	3⅛	8	25⅛
G-406	15	15⅛	6¼	23	4⅛	9	30⅛
G-407	17¼	17⅛	5¾	27½	4⅛	—	35⅛
G-408	19½	20⅛	5¾	32	4⅛	—	39⅛
G-409	21¾	22⅛	6¼	36⅛	4⅛	—	44⅛
G-4010	24	24⅛	6¼	41	4⅛	—	48⅛

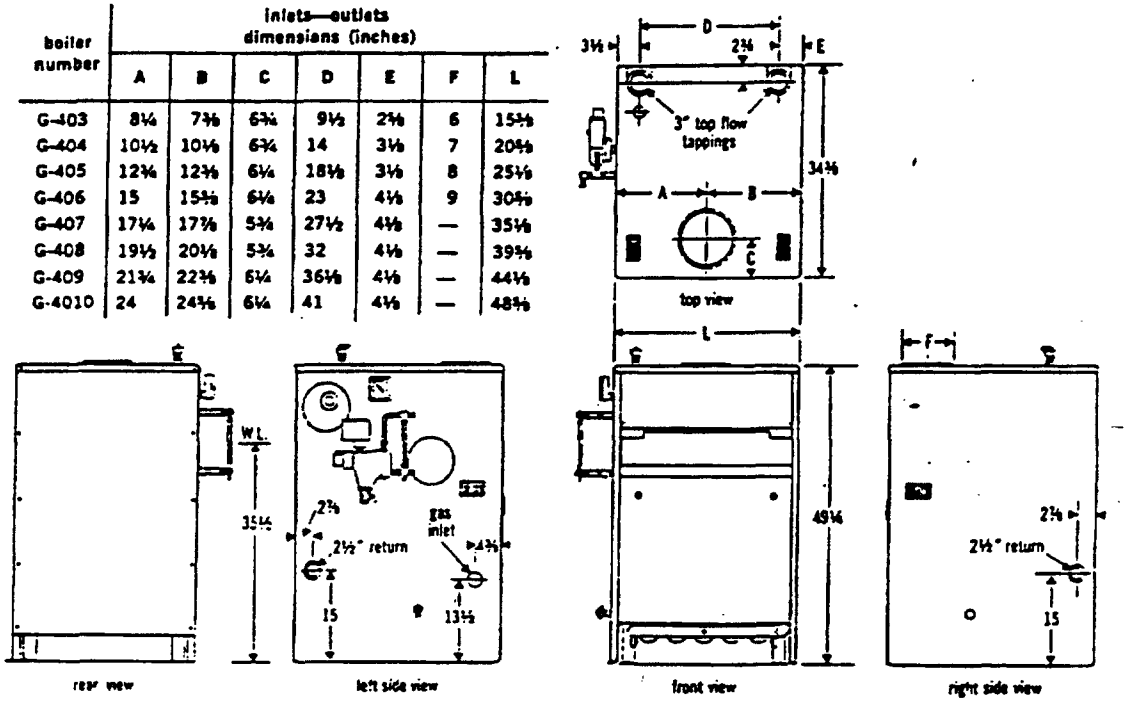

orifice drill sizes—main burner spuds (at sea level)

input per burner (Btuh)	specific gravity of gas	natural and mixed gases 800 Btu cu. ft.	900 Btu cu. ft.	1000 Btu cu. ft.	1100 Btu cu. ft.	1200 Btu cu. ft.	sewage gases 600 Btu cu. ft.	650 Btu cu. ft.	700 Btu cu. ft.	750 Btu cu. ft.	800 Btu cu. ft.	LP gases 2500 Btu cu. ft.	3300 Btu cu. ft.
75,000	0.60	⅞	16	19	21	24	—	—	—	—	—	—	—
75,000	0.65	11	15	18	20	—	—	—	—	—	—	—	—
75,000	0.70	10	14	17	19	21	A	2	3	4	7	—	—
75,000	0.80	—	—	—	—	—	C	1	2	3	4	—	—
75,000	0.90	—	—	—	—	—	D	B	1	2	3	—	—
75,000	1.53	—	—	—	—	—	—	—	—	—	—	—	39
75,000	2.00	—	—	—	—	—	—	—	—	—	—	43	—

NOTE: Sea level ratings are to be used for elevations between 0 and 2,000 ft. For altitudes above 2,000 ft., sea level ratings should be reduced at the rate of 4% for each 1,000 ft. above sea level.

manifold pressure table

gas	heating values*	manifold pressure (in. H_2O)
nat & mxd	800—1200	3.5
LP	2500 & 3300	11.0
sewage gas	600—800	3.0

*heating value of gas at sea level (60°F and 30 in. Hg.)

AMERICAN STANDARD
PLUMBING & HEATING DIVISION

assemblage of sections
control tappings

assemblage of sections

boiler number	no. of sections	dimensions (inches)	
		L	K
G-403	3	13	9½
G-404	4	17½	14
G-405	5	22	18½
G-406	6	26½	23
G-407	7	31	27½
G-408	8	35½	32
G-409	9	40	36½
G-4010	10	44½	41

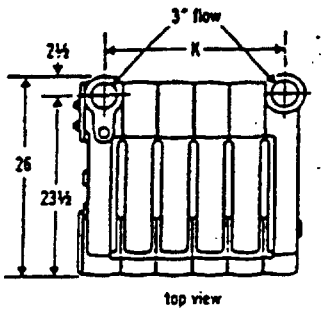

top view

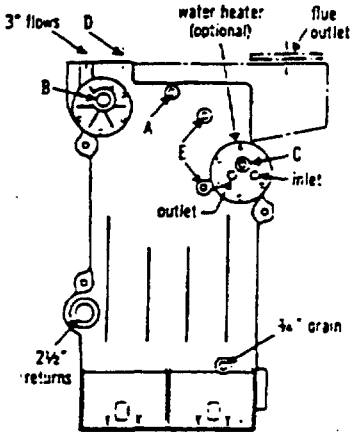

side view steam

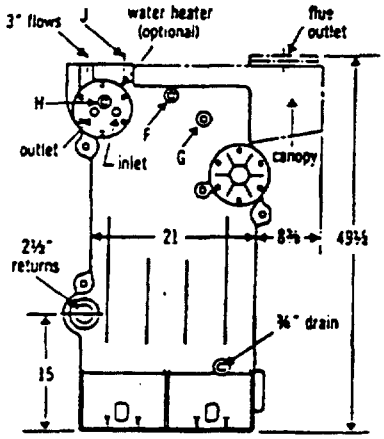

side view hot water

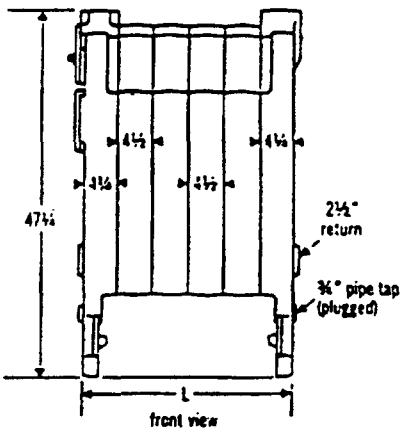

front view

control tappings (steam)

location	size of tappings (in.)	control used
A	½	pressure gauge
B	1½	blow-off a
C	¾	tankless heater control
D	1	safety valve
E	½	gauge glass and low water cut-off

a when required, auxiliary limit control is to be installed in blow-off piping.

control tappings (hot water)

location	size of tappings (in.)	control used
F	½	temperature and altitude gauge
G	½	auxiliary limit control (when required)
H	¾	combination operating, high limit and low voltage relay immersion control (for installation with tankless water heater)
		limit control (for installation without tankless water heater)
J	1	pressure relief valve

AMERICAN STANDARD PLUMBING & HEATING DIVISION
40 WEST 40TH STREET • NEW YORK, N.Y. 10018