7.1 KOP

KOPPERS ROOFING and WATERPROOFING SYSTEMS

- Coal Tar Built-up Roofing
- KMM Membranes
- Cold Applied Roofing
- Exeltherm Roof Insulations
- Reinforcement Fabrics
- Roof Maintenance Products

PLAINTIFF'S EXHIBIT
BEA-33
PENGAD-Bayonne,N.J.

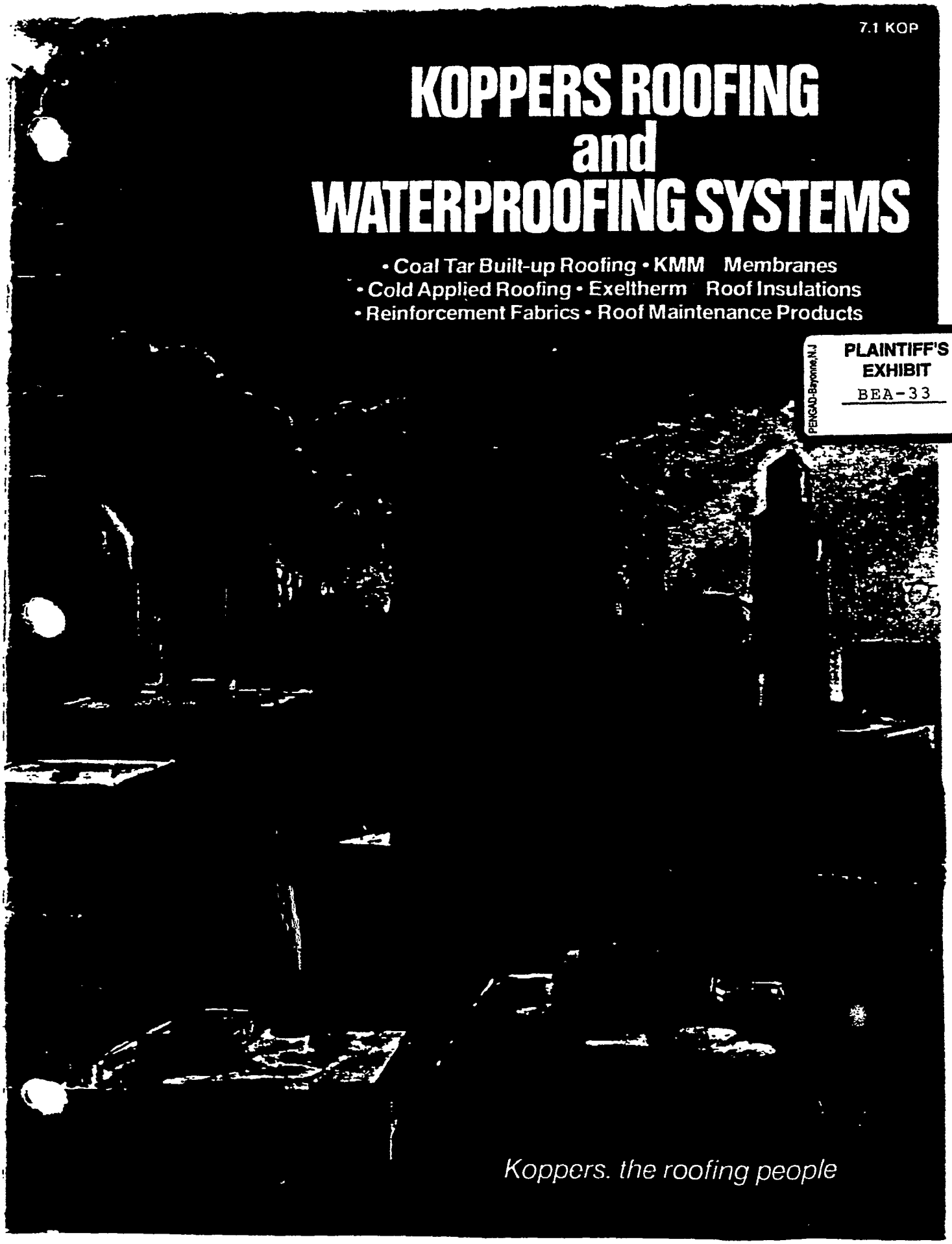

Koppers. the roofing people



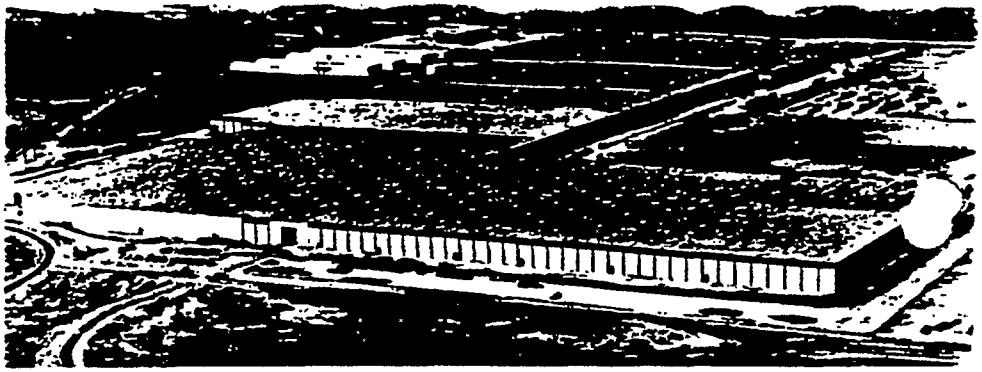

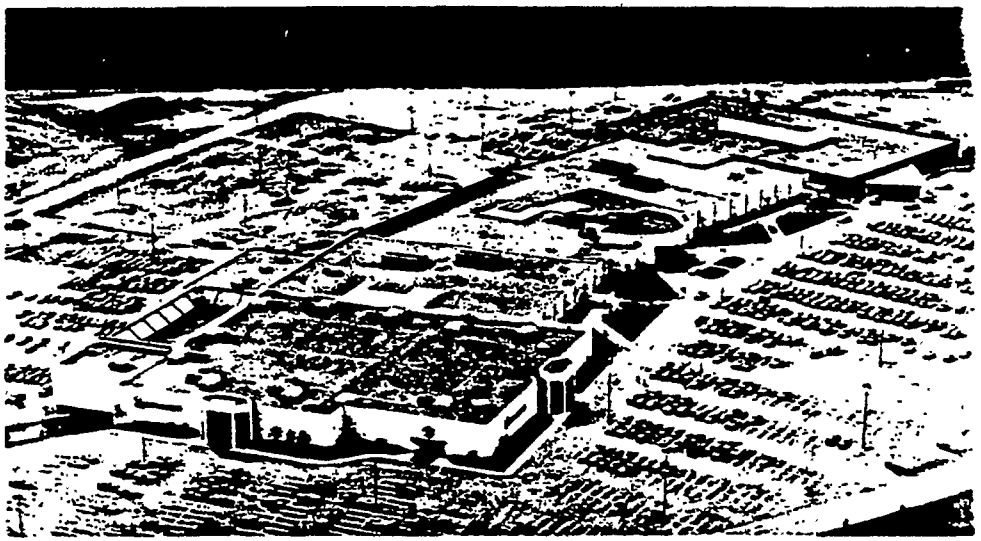

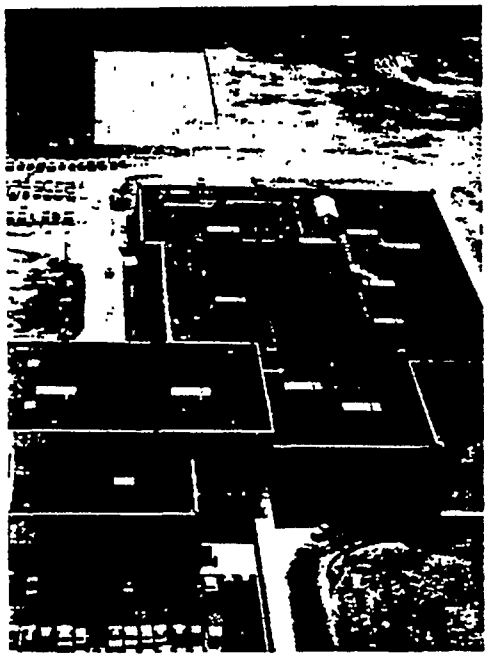

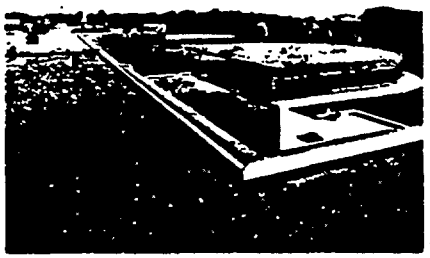

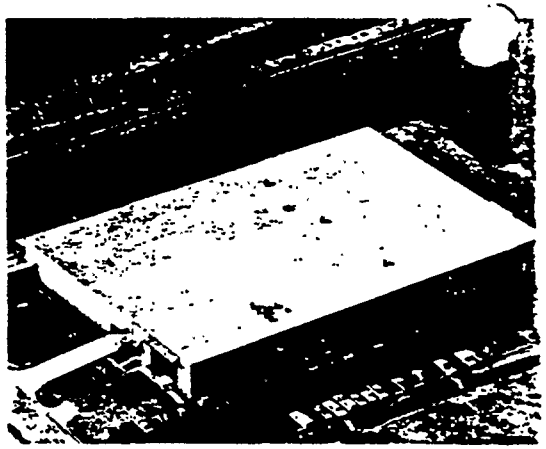





Preface

This manual contains recommended roofing specifications and procedures based on accepted good roofing practices and Koppers years or experience. They are intended to provide the architect, engineer, general contractor, and roofer with the proper information to plan and construct the best roof systems with the most time-proven materials available today.

The availability of a Koppers surety bond or guarantee for roofing and flashing constructed according to the information contained in this manual under Koppers bond and guarantee procedure, and the publishing of these specifications and information shall not be construed as creating any warranty, expressed or implied, with regard to any roofing or flashing for which a bond or guarantee has not been issued.

This roofing manual supersedes all previous roofing manuals published by Koppers in Sweets Catalogs.

The specifications and details contained in this manual have been determined to cover the proper procedure for long lasting roofing systems for most areas of our country.

In certain locations, minor variations in details and specifications may be appropriate due to unusual local conditions, such as wind, temperature, humidity, etc. To assure the best application of the proper specifications and details for your area we recommend you you consult your Koppers representative.

Table of Contents

3 Preface

4-5 Product Guide

6 Bonded & Guaranteed Roofing Program
Specification Reference Guide

7 Koppers Coal Tar Built-Up Roofing
Material and System Discussion

8-12 General Requirements & Special Conditions
Coal Tar Built-Up Roofing

13-14 Roof Specifications
Coal Tar Built-Up Roofing

15 Special Applications
Water Retaining Roof

16 Flashing Specifications
Built-Up Roof Applications

17-20 Flashing Details
Built-Up Roof Applications

21-27 KMM® Membrane Roofing Systems
Materials and System Discussion
Terminology
Application

28-29 KMM Roofing Specifications
Specification No. 610-620
Specification No. 630

30 KMM Flashing Specification

31 Flashing Details
KMM Membrane Applications

32-35 Waterproofing and Dampproofing Systems
Coal Tar Membrane Waterproofing
KMM Membrane Waterproofing

36 Liquid and Mastic Applied Waterproofing and Dampproofing Systems
Hydroshield Mastic 451
Liquid Asphalt 480

37-40 Exeltherm® Roof Insulation
General Conditions
Exeltherm Installation

41-43 Koppers Reinforcement Fabrics
Specification and Technical Data

44-47 Roof Maintenance Products and Systems
Roof Resaturants
Heavy Duty Roof Shield System
Koppers Aluminum Roof Coatings

Notice:

This roofing specification manual contains the latest and best available information as derived from Koppers long experience in the roofing industry. The design criteria and details contained herein have been compiled and are offered as a guide for consideration to assist the architect, owner and roofer in an attempt to provide the best roof possible for long, trouble-free service. Responsibility, however, for design of any roofing system, remains with the architect or engineer and building owner. The contents of this manual are subject to change at the discretion of Koppers Company, Inc. as future developments and experience are achieved.

Product Guide

The products listed below are manufactured to meet the highest quality standards set by Koppers Company, Inc. They are formulated specifically for use in roof and roof maintenance and waterproofing applications.

Additional information on these products may be obtained in other sections of this manual or by contacting your Koppers representative.

The products listed below are manufactured to meet applicable Federal and ASTM specifications. If a certification is required on any of these products, it must be requested at the time of order placement.

Products	Description	Federal Spec.	ASTM Spec.	Page No.
Bitumens				
Coal Tar Bitumen	Coal Tar based roofing and waterproofing bitumen	*	D-450-78 Type III	12
Asphalt Type III	Petroleum derived asphalt suitable for roofing applications (Type III—Steep asphalt)	*	D-312-78 Type III	12
Felts				
#15 Tarred Felt	Coal Tar Saturated Organic Fiber Felt	HH-R-595 B Type 15 C Style A	D-227	12
#43 Coated Base Sheet	Asphalt Saturated and Surface Coated Organic Fiber Felt		D-2626	12
Membrane system				
KMM* Aluminum Membrane	Aluminum Surface—Single Ply—Five layer laminated roofing membrane	*	*	21
KMM* Standard Membrane	Single Ply—Five layer laminated roofing and waterproofing membrane	*	*	21
Insulations				
Exeltherm* Urethane Insulation	Closed cell urethane foam with integrally bonded asphalt-saturated felt skins	HH-I-530A Type I Class II Grade 2, Style D	*	37
Exeltherm* Composite Insulation	Closed cell urethane foam laminated to perlite board	HH-I-530A Type I Class II Grade 2 Style E	*	37
Fabrics				
Tar or Asphalt Saturated Cotton (Std. Grade)	A woven cotton fabric saturated with tar or asphalt	*	*	42
Tar or Asphalt Saturated Cotton (Spec. Grade)	A woven cotton fabric with higher thread count than above grade	SS-C-450e	D-173	42
Glasfab*	A woven glass membrane available in 20 x 10 or 20 x 20 threads per inch—asphalt or tar coated	HH-C-4666	D-1668	42
Glascoat*	Same as above, except coated with white resin	*	*	42
Jute	Asphalt saturated jute, commonly referred to as treated burlap	HH-B-00800	D-1327	42
U F Mat (White)	A white, lightweight mat comprised of fine glass filaments in a random arrangement reinforced with a swirl pattern	*	*	43
U F Mat (Coated)	Same as above, coated with asphalt	*	*	43
Standard Mesh	Medium weight, white glass strands bound together in a random pattern	*	*	43
Heavy Duty Mesh	Heavy asphalt saturated glass fibers in jackstraw pattern	*	*	43
Stonemat	A polyester underlayment for KMM loose aggregate topping	*	*	26
Roof cements				
Flash-on #441	Flashing cement formulated for weathering and flow resistance	SS-C-153 Type I	D-2822 Type I	—
Flashing Cement	Not as heavy consistency as Flash-on #441	SS-C-153 Type I	D-2822 Type I	—
Hydroshield	Asphalt cutback. Formulated for application in all weather. Readily bonds to wet surface. Trowel or brush grades.	*	*	36
Tar Roof Cement	Tar based plastic cement	SS-C-153 Type II	*	—

Products	Description	Federal Spec.	ASTM Spec.	Page No.
Roof coatings				
Emulsions				
Liquid Asphalt 480	Asphalt emulsion. Will not alligator if properly applied. Heavy bodied, exceptionally high quality, non-fibrated clay emulsion.	*	D-1227 Type III D-1187 Type A	36
Liquid Asphalt 472	Asphalt emulsion. High quality asbestos fibrated, medium body, clay emulsion	SS-R-1781 Type I	D-1227 Type I	—
Liquid Asphalt 484	Fiberglass reinforced, asphalt emulsion	*	*	—
Bituminous Aggregate Binder (BAT)	For use with the KMM BAT Topping only	*	*	26
Cutbacks				
Asphalt Roof Coating 454	Medium body, asbestos fibrated cutback coating	SS-A-694D	D-2823 Type I	—
Fiber Coating 415	Tar cutback. Penetrates and resaturates tar and gravel roofs	SS-C-540b	N/A	—
Resaturants				
Roof Resaturant 425	Asphalt Cutback. Combines maximum penetration and coating properties	*	*	45
Roof Resaturant 410	Highest quality tar resaturant available. Excellent penetration and softening qualities.	*	*	45
Primers				
Hi-Pen Primer 452	Thin asphalt cutback primer with maximum penetrating capabilities	SS-A-701	D-41	16
Coal Tar Concrete Priming Oil	Coal tar based primer for roofing and waterproofing applications	*	D-43	33
Adhesives				
CP Adhesive	Superior asphalt cutback adhesive for asphalt felt applications	*	*	—
KMM Adhesive	A tenacious asphalt adhesive formulated specifically for adhering KMM membrane	*	*	21
Reflective roof coatings				
Alum. Roof Coating 434	Contains 3 lbs. aluminum paste per gallon. Non-fibrated.	TT-C-00493	D-2824 Type I	47
Alum Roof Coating 435	Reinforced with asbestos fibers. Contains 3 lbs. aluminum paste per gallon.	TT-C-498B	D-2824 Type II	47
Alum Roof Coating 444	Contains 2 lbs. aluminum paste per gallon. Non-fibrated.	*	*	47
Alum. Roof Coating 445	Contains 2 lbs. aluminum paste per gallon. Reinforced with asbestos fibers.	*	*	47
Colored Roof Coating (White)	White acrylic emulsion decorative coating. To be used over new Liquid Asphalt 480.	*	*	—
Caulkings				
Acrylic #400	One part, gunnable, acrylic caulking.	*	*	—

*Applicable Federal and/or ASTM Guide Specifications are not available for this product.

Koppers Roof Bond/Guarantee Program

Bonds and/or Guarantees are available for listed roofing specifications in this manual. **To qualify for a Koppers Roofing Bond or Guarantee, roofing and flashing must be constructed in accordance with Koppers Specifications, with Koppers materials, and by a roofing contractor authorized by Koppers.**

The Bond Program

Koppers bonds are available for 10, 15 or 20 year terms, and only cover coal tar built-up roofing and KMM flashings where approved.

The Guarantee Program

Koppers offers the following Built-up Roofing Guarantees:

10-Year Guarantee
A ten-year guarantee with a ten-year renewal option—for 4 and 5 ply Coal Tar Bitumen roofing systems only

5-Year Guarantee
A five-year guarantee with a five-year renewal option—for 4 and 5 ply Coal Tar Bitumen Built-up Roofing Systems only.

KMM Guarantee
A five-year guarantee with a five-year renewal option. KMM membrane applications only.

Requirements for Koppers Roof Bonds:

1. All roofing to be bonded/guaranteed must be constructed in conformance with Koppers specifications.

2. Koppers bonds are not available for residential roofing.

3. Koppers bonds are transferable upon timely written notice of change of property ownership.

4. Koppers bonds are available within the Continental United States in all cases except those areas where Koppers does not presently provide inspection service.

5. Approved flashings may be bonded/guaranteed for terms up to but not exceeding the term for which the roof is bonded.

6. Charges for the roofing bonds are made on a per square (100 sq. ft.) basis of the roofing membrane.

Coverage:

Koppers roof bonds provide for repairs of leaks to the roofing not occasioned by defects in the building, abuse or extreme weather conditions during the term of the bond up to the monetary limit specified in the bond.

Roof bonds DO NOT cover the repair, installation, or replacement cost of the following:

1. Decking materials.
2. Vapor barriers.
3. Insulation products.
4. Metal work.
5. Products in the roof assembly furnished by others.
6. Damage to the bonded roofing or flashing caused by the use of the products listed in 1 through 5 above, their installation or attachment.
7. Vandalism or owner abuse.

Koppers reserves the right to cancel the bond if the roof is damaged due to causes not covered by the bond if it is determined its satisfactory performance for the remaining term of the bond is impaired. Cancellation due to damage of this type does not provide for any refund of the original cost.

Bond Selection Reference Guide

Type System	Deck	Slope	Spec. No.	Construction	Page
COAL TAR BUILT-UP ROOFING SYSTEMS					
Coal Tar Bitumen	Nailable	½ max.	210	4 and 5 ply tarred felt	13
Coal Tar Bitumen	Non-nailable & Insulation	½ max.	220	4 ply tarred felt	14
KMM ROOFING SYSTEMS					
Loose Laid Membrane Aggregate Topping	Nailable Non-nailable & Insulation	1" max	610	Standard KMM Membrane	28
Loose Laid Membrane Bituminous Aggregate Topping	Nailable Non-nailable & Insulation	1½" max.	620	Standard KMM Membrane	28
Adhered Membrane Aluminum Surface	Nailable Non-nailable & Insulation	No Limitation	630	Aluminum KMM Membrane	29

KOPPERS
Architectural and Construction Materials

7 1/KOP

Coal Tar Bitumen Built-up Roofing
Materials and System Discussion

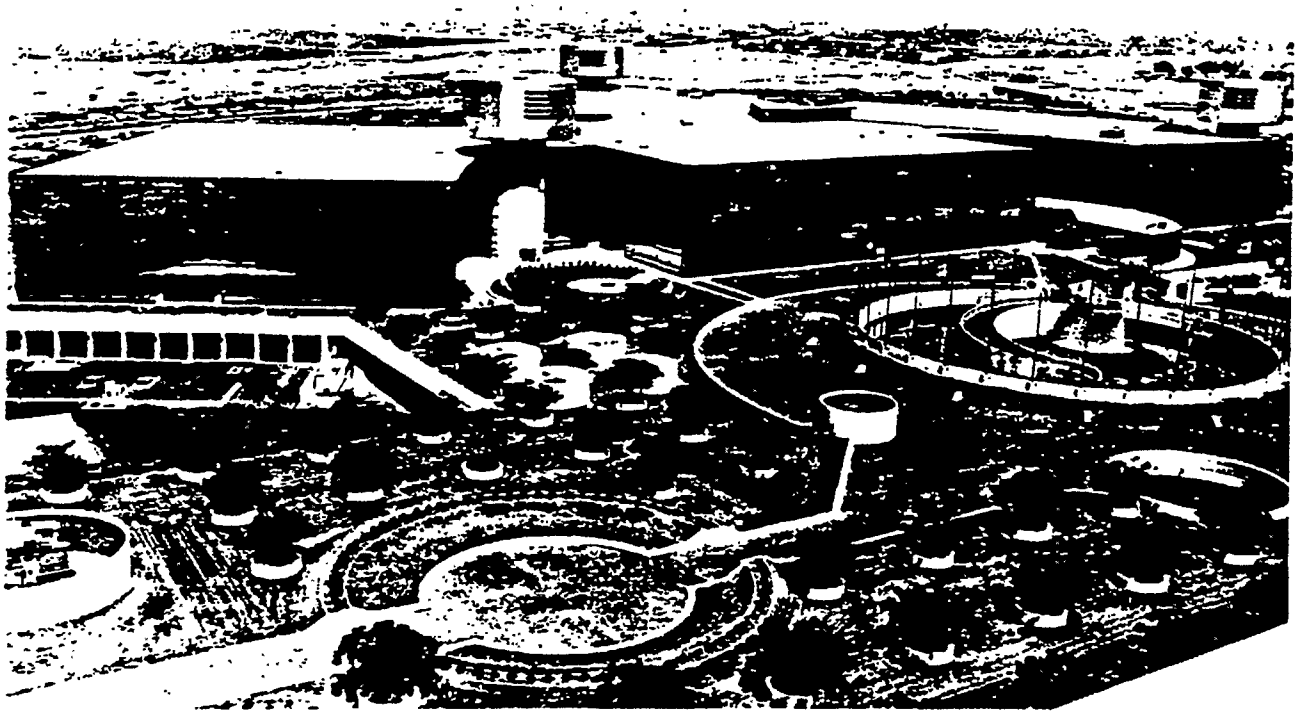

Description

Koppers Coal Tar Bitumen built-up roofing systems consist of alternate layers of Koppers Coal Tar Bitumen and Koppers tarred felt, surfaced with a heavy top pouring of Koppers Coal Tar Bitumen into which is embedded an aggregate.

Koppers Coal Tar Bitumen built-up roofing systems are used whenever a roof is exposed to water and/or corrosion, and on all level or low sloped roofs where minimum maintenance is required.

Features

Coal Tar Bitumen built-up roofing provides one of the most durable roofing systems known due to its inherent superior waterproofing and weathering characteristics. This is THE time proven roofing system for level and low sloped roofs.

Coal Tar Bitumen provides numerous advantages to an owner The superior performance of coal tar roofing systems in the areas listed below make coal tar roofing systems unique in the roofing industry.

1. Coal Tar Bitumen has natural resistance to water, air and water vapor penetration.

A tight molecular structure enables Coal Tar Bitumen to resist water penetration and oxidation of the roof surface.

2. Another unique feature of coal tar roofing is its self-healing ability.

Alligatoring and hairline cracks common to most materials, eventually cause damage to the roofing membrane Coal Tar Bitumen has a property known as "cold flow" which automatically corrects these conditions before serious damage takes place. This "cold flow" feature heals small mechanical fractures at normal temperatures.

3. Application improvements.

Because Koppers has expertise in the chemistry of aromatic coal tars, Coal Tar Bitumen was developed with the beneficial features of low fume evolution at application temperatures, thus reducing potential irritation during application.

These features represent significant improvements which are in consort with the aims of government, labor, and industry in the areas of reduced air pollution and improved worker conditions.

Uses

1. All 'dead' level roofs
2. All water cooled roofs
3. Low sloped roofs with occasional ponding
4. Low sloped roofs with retarded drainage
5. All buildings with level or low sloped roofs that are built for long service life
6. Roofs in most highly corrosive atmospheres

Slopes

Koppers recommends that the maximum roof slope be one-half (½) inch per foot for all built-up Coal Tar Bitumen roof systems. Koppers does, however, permit slopes up to two (2) inches per foot at flashings that incorporate tapered cants and for short run crickets or saddles for drainage, provided there are provisions for adequate back nailing, and these crickets or saddles do not cover more than 15% of the roof area.

All felts must be backnailed on slopes one-half (½) inch per foot or more. For recommendations on roofing procedures for slopes over ½ inch per foot, consult your Koppers representative.

Underwriters Laboratories Classifications

Underwriters Laboratories, Inc. Building Materials Directory, Guide No. (360018) TFJK-Built-Up Roof Covering Materials Lists Koppers Coal Tar Bitumen and tarred felts for use in construction of Class A and B built-up roof coverings.

Additional References: Roof Deck Constructions are listed under U. L. Guide No (360 RO) TGKX. Roof deck construction materials, such as vapor barriers, insulations, and adhesives are listed under U. L. Guide No. (360 R13) TGYV.

Bonds/Guarantees

Koppers Bonds/Guarantees are available for 5, 10, 15, and 20 year terms. Roof bonds/guarantees cover ONLY the built-up roofing and flashing membrane.

For further details, please refer to Page 6 of this manual.

General Requirements and Special Conditions

In any building the performance of the Built-Up Roofing will be affected to some degree by all of the parts of the roof structure system as well as the inside and outside atmospheric environment. Each component should be investigated for its compatibility with each of the others. The roof structure system may include any or all of the following:

- Outside Air Conditions
- Roofing System
- Peripheral Details (Flashings)
- Insulation (if present)
- Vapor Barrier (if present)
- Structural Deck including sub purlins (supports)
- Structural Framing
- Air Space (if present)
- Ceiling (if present)
- Interior Air Conditions

You will find information in this manual pertaining to materials and application methods other than for built-up roofing. They are offered to assist the designer in establishing their normal position in the roof structure system. They should not be construed as part of the built-up roofing system, as endorsement, nor as part of the designated specifications other than to establish a suitable roofing base in the roof structure system.

The proper design, specification and positioning of the various components of the roof structure system is the responsibility of the building owner or his designer. Any subsequent failures, due to either the installation or lack of installation will not be Koppers responsibility.

The deck is the base over which the built-up roofing, or insulation and built-up roofing is applied. Where the term deck is used in this manual without reference to insulation, it shall designate the surface over which roofing is to be applied. All decks shall be clean, smooth, dry, rigid and free of debris. Any deck defect shall be corrected before application of roofing. All decks shall be installed in accordance with the deck manufacturer's specifications and shall be in compliance with Koppers General Requirements.

In approving any deck as satisfactory to receive a Koppers roof, only the deck surface is accepted. It is the responsibility of the building designer and the deck manufacturer to provide for expansion and contraction in a manner that will provide a stable base for the roofing; for support of maximum anticipated loads; secure attachments vertically and laterally, and the selection of the deck material and construction details including their ability to contain bitumens.

(KOPPERS WILL NOT ASSUME RESPONSIBILITY FOR DECK DEFECTS OR BITUMEN SEEPAGE.)

The placing of conduits, bolt heads, etc., above the roof deck and below the roofing membrane is not recommended.

All projections or openings in the deck should be completed prior to the application of the roofing.

Optimum adhesion to the deck is necessary for good roof performance. Where Koppers Bitumen or steep asphalt is used for adhesion questionable decks may be tested for dryness and adhesion by pouring one pint of the bitumen, heated to application temperature, over a representative area or areas of the deck. The deck is not satisfactory if the bitumen foams or bubbles, or upon cooling to ambient temperature may be stripped clean of the deck.

Metal Decks: Decks of this type must also be free from loose rust and oily substances.

It is absolutely necessary to install board type insulation on a metal deck before the built-up roofing is applied.

A metal deck must be clean, smooth, and properly anchored to the steel purlins and all joints correctly lapped and fastened.

Type of metal deck, flute opening and various other factors determine the type and thickness of insulation required. Consult your Koppers representative for recommendations.

Metal roof decks shall be designed so that they will not have a deflection exceeding 1/240 of clear span under all types of loads (live & dead). Designer should take into account roof traffic conditions including mechanical equipment used for roof application.

Note: When applying insulation and roofing over a perforated or acoustical type metal deck, it is recommended that a vapor barrier be installed prior to the application of the insulation or that a base sheet set in steep asphalt be utilized as the first ply of Built-Up Roofing. This is to reduce the possibility of Bitumen drippage.

Application of Vapor Barrier Below Insulation Felt Type
Coat the ribs of the metal deck with Steep Asphalt and then install two (2) full thicknesses of Koppers No. 15 Asphalt Felt, lapping each sheet nineteen (19) inches over the preceding sheet, mopping with Steep Asphalt the full width of the nineteen (19) inch lap. Extend all felt up vertical surfaces and cutoff at height of insulation.

Attachment of Insulation
Install insulation with steep asphalt or approved mechanical fasteners. See "Attachment" Page 10.

a. When attachment is made with steep asphalt applied to deck at rate of 12 to 15 lbs. per 100 sq. ft., place insulation while steep asphalt is still molten to provide good adhesion.

b. If slope of deck is one-half (½) inch per foot or more, insulation must be able to retain nails and, in addition to being set in steep asphalt, insulation must be fastened to the metal deck with approved mechanical fasteners in accordance with FM requirements. If two layers of insulation are specified, top layer joints shall not coincide with joints of bottom layer. Fasteners shall be driven after the top layer of insulation is installed.

c. If UL and FM requirements are a factor for insurance reasons, the insulation and adhesive must be listed and approved in accordance with their current data.

In areas that may exceed the ½" per foot maximum slope requirement, all plies of tarred felt must be back nailed. Wood nailing strips must be provided when the substrate is not considered nailable.

Application of Roofing Membrane
For application of roofing materials over the insulation, follow Specification No. 220, **Page 14.**

Precast concrete structural sections demand the same recommendations as poured concrete decks, although the presence of moisture, due to insufficient drying time, is not likely. If the contractor finds one or more slabs resting unevenly, with edges projecting above the surface, this should be corrected by resetting or leveling off. Open-cell aggregate concrete is not acceptable for filling or leveling low areas. All joints, grouted or not, should be caulked with trowel-grade asphaltic plastic cement. Slab sides and ends should be square, rest firmly and evenly on supporting members, and be installed to prevent lateral and vertical movement.

Application of Vapor Barrier Below Insulation
1. On precast concrete slab or tile deck, strip mop with Coal Tar Bitumen up to four (4) inches from the edge of each joint. Not less than 30% of the surface must be mopped, at a min. rate of 10 lbs. per 100 square feet.

2. Lay over the entire surface two (2) full thicknesses of Koppers Tarred Felt, lapping each sheet nineteen (19) inches over the preceding sheet—mopping with Coal Tar Bitumen the full nineteen (19) inches so that in no place shall felt touch felt.

3. Extend all plies of felt up vertical surfaces and cut off at height of insulation.

Application of Insulation: Over Vapor Barrier
Apply a uniform coating of Coal Tar Bitumen over the entire surface. While hot, embed the insulation. If there are two (2) layers of insulation (e.g. as required for pre-stressed concrete sections) mop the entire surface of the first layer with Coal Tar Bitumen. While hot, embed the second layer of insulation.

Application of Insulation Directly to Deck
Over precast concrete or tile deck, strip mop with Coal Tar Bitumen up to 4" from the edge of each joint. Not less than 30% of the surface must be mopped at a minimum rate of 10 lbs. per 100 sq. ft. While the bitumen is still hot, embed the insulation. See Insulation section, Page 11

Application of Roofing Materials to Deck
On precast concrete slab or tile deck, strip mop with Coal Tar Bitumen up to four (4) inches from the edge of each joint. Not less than 30% of the surface must be mopped, at a minimum of 10 lbs. per 100 square feet.

Complete the system in accordance with Specification No. 220.

In areas that may exceed the ½" per foot maximum slope requirement, all plies of

tarred felt must be back nailed. Wood nailing strips must be provided when the substrate is not considered nailable.

Lightweight Insulating Concrete

Lightweight insulating decks include lightweight aggregate concrete (20 to 40 lbs. per cu. ft. oven dry density); foamed concrete, gypsum and thermosetting asphaltic decks. Except for Dycon® Concrete, lightweight insulating deck systems must be capable of venting excess water vapor to the underside. Koppers will not accept these lightweight insulating decks to be placed over vapor barriers, poured concrete substrates, unvented metals, or any type of base which will not permit these materials to vent from the underside. This is necessary to prevent a water vapor pressure build-up under the built-up roofing. Occasional, or spot vents through the roofing as the only venting method are not satisfactory substitutes for underside.

In addition, lightweight insulating decks shall have sufficient cohesive strength to provide firm attachment of the roofing to the deck and framing to prevent wind uplift damage or blow-offs. Nailable decks must be capable of developing at the very minimum, a 40 pound nail pull-out or withdrawal strength. If the materials do not achieve this value, additional fasteners will be required over and above those quantities described in the ensuing specification (standard is approximately 100 fasteners per square) to achieve a minimum attachment standard of 40 lb. per square foot. Koppers will not be responsible for failure of the insulating deck to remain integral or for disbonding of the roofing from the surface of the deck.

Provisions should be made wherever possible to provide additional venting such as notched wood perimeter nailers, etc., in conjunction with the venting from the underside of the deck. If board type insulation is to be applied over a lightweight insulating deck, provisions must be made between the fill and the board insulation to prevent fill moisture from affecting the insulation and roofing.

Thermosetting Asphaltic Concrete
When applying the roofing membrane directly over a thermosetting Asphaltic Concrete, follow Specification 210 except the first ply of the roofing membrane must be a base sheet set in a solid mopping of steep asphalt.

Application of Membrane Below Board-type Insulation
1. Apply over entire surface one (1) ply of Koppers coated base sheet, lapping each sheet four (4) inches over preceding sheet and nailing at lap no less than nine (9) inches and stagger nailed down center of each sheet on nine (9) inch centers.

2. Extend plies up vertical surfaces and cut off at height of insulation.

For vapor barrier provisions contact your Koppers Representative.

Application of Board-type Insulation Over Membrane (or Deck)
Apply a uniform coating of Coal Tar Bitumen over the entire surface and, while hot, embed the insulation. If there are two (2) layers of insulation mop the entire surface of the first layer with Coal Tar Bitumen and, while hot, embed the second layer of insulation.

For application of roofing materials over insulation follow Application Specification No. 220.

Application of Roofing Materials to Deck
1. Apply over entire surface one (1) ply of Koppers coated base sheet, lapping each sheet four (4) inches over preceding sheet and nailing at lap no less than nine (9) inches, and stagger-nailed down the center of each sheet on nine (9) inch centers.

2. Over the base sheet apply three (3) plies of Koppers Tarred Felt, lapping plies twenty-four and two-thirds (24⅔) inches. Where slope of deck is one-half (½) inch per foot or more, nail each sheet of felt six (6) inches from the back edge on twenty-four (24) inch centers.

All laps shall be mopped with Coal Tar Bitumen the full twenty-four and two-thirds (24⅔) inches, so that in no place shall felt touch felt.

3. Complete the system in accordance with Specification No. 210.

Note: In areas that may exceed the ½" per foot maximum slope requirement, all plies of tarred felt must be back nailed. Wood nailing strips must be provided when the substrate is not considered nailable.

Poured Gypsum
Precast Gypsum

The same recommendations applying to precast concrete slabs apply to precast gypsum slabs and gypsum metal bound planks, except that the first ply of the roofing membrane must be a coated base sheet fastened in accordance with the base sheet alternate. See Page 12. All uneven slabs should be reset or leveled off so that the roof will be laid on a flat and even surface, free from projections and low areas. Because these slabs are precast, the possibility of a high moisture content being present is more remote than in the poured gypsum roof or lightweight insulating concrete roof deck. Poured gypsum decks sometimes cause trouble because the built-up roofing is laid before the deck is thoroughly dry. When this happens the result is a blistered and buckled membrane, or, just as serious, insulation curls and makes an unsatisfactory job. The roofing contractor, backed by the architect, must insist on a thoroughly dry deck before beginning work. He should also see to it that the deck is free of loose sand, frozen scale and other foreign matter. Projections should be removed, low points filled with cement grout or other suitable material, and all cracks pointed up.

Application of Membrane Below Insulation
1. Apply over entire surface one (1) ply of Koppers coated base sheet, lapping each sheet four (4) inches over preceding sheet and nailing at lap no less than nine (9) inches and stagger nailed down center of each sheet on nine (9) inch centers.

2. Extend plies up vertical surfaces and cut off at height of insulation.

For vapor barrier provisions contact your Koppers Representative.

Application of Insulation Over Membrane (or Deck)
Apply a uniform coating of steep asphalt over the entire surface, and, while hot, embed the insulation. If there are two (2) layers of insulation mop the entire surface of the first layer with steep asphalt, and, while hot, embed the second layer of insulation.

For application of roofing materials over insulation follow Application Specification No. 220.

Application of Roofing Materials to Deck
1. Apply over entire surface one (1) ply of Koppers coated base sheet, lapping each sheet four (4) inches over preceding sheet and nailing at lap no less than nine (9) inches, and stagger-nailed down the center of each sheet on nine (9) inch centers.

2. Over the base sheet apply three (3) plies of Koppers Tarred Felt, lapping plies twenty-four and two-thirds (24⅔) inches. Where slope of deck is one-half (½) inch per foot or more, nail each sheet of felt six (6) inches from the back edge on twenty-four (24) inch centers.

3. Complete the system in accordance with Specification No. 210.

Note: In areas that may exceed the ½" per foot maximum slope requirement, all plies of tarred felt must be back nailed. Wood nailing strips must be provided when the substrate is not considered nailable.

Poured Portland Cement Concrete

The deck surface must be smooth, dry, and free of dirt, dust and debris. Projections should be removed, low points filled with cement grout or other suitable material, and all cracks pointed up. Roof deck shall be properly graded to outlets.

Application of Vapor Barrier Below Insulation
1. Apply a uniform coating of Coal Tar Bitumen to the deck.

2. Lay over the entire surface two (2) full thicknesses of Koppers Tarred Felt, lapping each sheet nineteen (19) inches over the preceding sheet—mopping with Coal Tar Bitumen the full nineteen (19) inches so that in no place shall felt touch felt.

3. Extend all plies of felt up vertical surfaces and cut off at height of insulation.

Application of Insulation
Apply a uniform coating of Coal Tar Bitumen over the entire surface into which, while hot, embed the insulation. If there are two (2) layers of insulation mop the entire surface of the first layer with Coal Tar Bitumen into which, while hot, embed the second layer of insulation.

Application of Roofing Materials Over Insulation or Deck
Install the roof in accordance with Specification No. 220.

In areas that may exceed the ½" per foot maximum slope requirement, all plies of tarred felt must be back nailed. Wood nailing strips must be provided when the substrate is not considered nailable.

Wood Plank/Plywood

Wood shall be well seasoned, dry and preferably treated. End joints shall have adequate bearing. Loose or void knot holes, large cracks, etc., shall be covered with sheet metal.

Lumber shall be a minimum of 1" nominal thickness.

Plywood (exterior grade) shall be a minimum of ½" thickness. Hot Coal Tar Bitumen should never be applied directly to a wood deck. Sandwiched between the heat from above and the heat from below, such material finds its way through the boards into the building. Good practice demands the cushioning and blotting effect of a layer of sheathing paper followed by layers of dry felt. Shiplap and square edge boards should be avoided where possible. If the underside of the roof deck is exposed to air pressure created from open doors or windows, tongue-and-grooved lumber should be used.

Preparation Below Insulation
1. The wood roof deck shall be covered with one (1) layer of approved rosin-sized sheathing paper weighing approximately five (5) pounds per one hundred (100) square feet. The sheathing paper shall be lapped two (2) inches and secured to the deck by occasional nailing.

2. Two full thicknesses of Tarred Felt shall be laid over the entire surface, lapping each sheet nineteen (19) inches over the preceding sheet and nailing on 8½" centers, one inch from edge lap.

Application of Vapor Barrier Below Insulation
Note: When vapor barrier is required, use these procedures in addition to **Preparation Below Insulation** noted above.

Lay over the entire surface two (2) full thicknesses of Koppers Tarred Felt, lapping each sheet nineteen (19) inches over the preceding sheet—mopping with Coal Tar Bitumen the full nineteen (19) inches so that in no place shall felt touch felt.

Application of Insulation
1. Mop the entire surface with a uniform coating of Coal Tar Bitumen into which, while hot, firmly embed the insulation.

For application of roofing materials over insulation follow Application Specification No. 220 on Page 14.

Application of Roofing Materials Directly on Wood
For application of roof materials directly on wood decks follow Specification No. 210 on Page 13.

In areas that may exceed the ½" per foot maximum slope requirement, all plies of tarred felt must be back nailed. Wood nailing strips must be provided when the substrate is not considered nailable.

Structural Wood Fiber

All decking must be installed in strict accordance with the particular deck manufacturer's recommendations for installation. Deck material must be protected during shipment, job site storage and prior to roofing application. No planks which have become structurally weakened due to moisture, fractures or mutilated edges may be used. All joints must be level and preferably grouted full and level with plank surfaces are recommended by the deck manufacturer. All planks must be well anchored to supporting members to resist movement in a fashion recommended by the deck manufacturer. Any planks which bow or deflect or do not seat securely must be replaced. Responsibility for the selection of a particular type of wood fiber deck, its installation, provision for expansion and contraction, its suitability to job requirements, and its ability to support anticipated loads in its environment rests with the designer and deck manufacturer.

Decks of these types, whether grouted or not, shall be caulked with Koppers Flashing Cement which shall be applied so that the top surface is level and smooth. Felt stripping four (4) to six (6) inches wide set in a troweling of the cement is required to assist in leveling uneven joints and bridge the joint openings thus providing a better surface for the roofing materials.

Caution: care must be taken to avoid bitumen drippage.

Application of Insulation
Install insulation in a uniform coating of Type III steep asphalt. Nailable insulation not exceeding one (1) inch thick may be installed using 1¾ inch Simplex Tube-Lok nails in accordance with the insulation manufacturer's specification. Installation of roofing over insulation shall be as per specification outlined below with base sheet mopped solidly to the insulation in steep asphalt as the first ply.

For bonded roofing applications, fasteners, other than Tube-Lok nails, must be acceptable to Koppers. Fasteners shall be applied at the minimum rate of one (1) per square foot as recommended by the Structural Wood Fiber Products Association.

Application of Vapor Barrier Below Insulation
Install two (2) plies of No. 15 asphalt felt lapped nineteen (19) inches in Type III steep asphalt. Plies shall be mopped solidly so that in no place shall felt touch felt. Install insulation in solid mopping of steep asphalt. Roofing over insulation is to be in accordance with Specification No. 220 with a base sheet mopped solidly to the insulation as the first ply.

Application of Roofing Materials Direct to Deck
Install roofing in accordance with Specification No. 220 except that a base sheet, set in steep asphalt, must be substituted as the first ply. See "Base Sheet Alternate" Page 12.

Complete the system in accordance with Specification No. 220.

In areas that may exceed the ½" per foot maximum slope requirement, all plies of tarred felt must be back nailed. Wood nailing strips must be provided when the substrate is not considered nailable.

Material Protection

It is the responsibility of the roofing contractor to protect all roll roofing materials and roof insulation from ground or construction moisture and weather before and during construction.

Attachment

Maximum adhesion or secure attachment of all components in the roofing assembly is necessary for satisfactory long term performance of the roofing membrane. Adhesive and/or fastener quantities specified by the manufacturer must be capable of passing a minimum uplift resistance of 40 pounds per square foot (psf).

When Building Code requirements dictate a higher uplift resistance than our minimum requirement, additional fasteners or adhesive will be required over and above the quantities described in the ensuing specifications.

Solid moppings of hot applied bitumen have been found to provide an uplift resistance in excess of 120 psf.

Strip moppings of hot applied bitumen have been found to provide an uplift resistance in excess of 60 psf.

When nails or fasteners are used, they must be nailed through flat tin disks or have sufficiently large heads to prevent fracture or puncture through the roofing felts.

The following are the names of some manufacturers who provide nail and/or fastening devices for use with built-up roofing:

E/S Products, Inc.
New Rochelle, NY
Simplex Nail & Manufacturing Corp.
Americus, GA
Independent Nail Corp.
Bridgewater, MA
E. G. Building Fasteners Corp.
New York, NY

Hot applied adhesives or mechanical fasteners are the preferred means of attachment.

Koppers will not be responsible for any damage caused by or the result of unsatisfactory attachment.

For further information contact your Koppers representative.

Expansion Joints (Building)

Since all materials expand and contract due to temperature and/or moisture, the use, location, and design of building expansion joints, especially in the roof structure system, should be taken into consideration at the time of original building design.

Although provisions for adequate expansion joints are the responsibility of the building designer, Koppers offers the following recommendations for the protection of the roofing system against splits caused by expansion and contraction of the building. Building expansion joints should be installed.

1. On roof areas larger than 200 feet in each direction
2. At all places where the structural supports and roof assembly change direction
3. Where type of adjoining deck materials change

Where control or expansion-contraction joints are provided in the structural steel, deck material, or deck system, provisions must be made for continuation of this relief through the built-up roofing system. Koppers realizes that in a climate controlled building there may be little or no expansion AFTER the building is in use, however, building expansion joints are still recommended based upon the following points:

1. During construction the building will not be under a steady state temperature/humidity condition so that thermal and moisture movement can be sufficient to fracture the roofing.
2. If no building expansion joint is provided, the owner must keep the building at the steady state temperature and humidity condition at all times, as holiday shut-downs can fracture the roofing due to the movement of the roof system resulting from temperature/humidity variation.
3. If the occupancy is fairly large, the sudden entrance on a rainy day of many rain-soaked employees may cause moisture movement in the roof structure system which can fracture the roofing.

Water Stops (Temporary Protection)

Water stops consisting of two (2) plies of tarred felt and mopping of Coal Tar Bitumen extending onto the deck and insulation at least 6" and 4", shall be applied at the end of each day's work over exposed edges of insulation.

These temporary protective measures must be removed cleanly when work is resumed to prevent blocking moisture vapor movement to vented edge details.

Cut Offs (Permanent Installation)

Venting of roof insulation at walls, curbs, eaves, etc. is recommended for all but a few special roof structures. Therefore, cut-offs should not be installed at edges of insulation adjoining these areas for venting purposes.

Cut-offs may be installed however, provided they are constructed to run in one direction continuously to vented edges and provided no section of the roofing is isolated or blocked from venting.

Vapor Barrier

Vapor barriers are normally used where the heat flow direction and/or humidity within the building, during any climate or occupancy cycle, might cause the dew point or condensation to occur under the built-up roofing within the insulation chamber. It is important that the vapor barrier, when installed, provide a continuous seal, (including ventilators, skylights, peripheral walls, and other terminations) from the source of the water vapor.

Insulation

Insulations come in varying thicknesses and sizes. Should the manner of attachment as suggested conflict with that specified by the individual insulation manufacturer, the insulation manufacturers specifications shall be followed and in addition, shall be in compliance with Koppers General Requirements.

Good roofing practice dictates that the following points be considered when specifying board type roof insulation.

1. The roofing insulation must be kept dry at all times. It must be of a type approved by Koppers for use with a Koppers built-up roof. It should only be applied over a deck complying with all of Koppers General Requirements.
2. If the roof deck slope is one-half (½) inch per foot or more, the insulation must be able to retain nails or wood nailers must be installed perpendicular to the slope at each course of insulation.

Spacing of nailers must be such that the insulation fits snugly with the nailers but must not be force fitted.

3. No more insulation shall be laid at any one time than can be protected by bitumen and felt in case of sudden weather changes.
4. Edges of insulation shall be brought closely together and shall not be forced into place. Where insulation joins vertical surfaces, the insulation shall be cut in a neat manner allowing approximately one-half (½) inch clearance.
5. When more than one (1) layer of insulation is used, joints in each layer shall not coincide. All layers shall be parallel to preceding layers.

Note: When a roofing membrane and insulation system is installed over a non-porous substrate (concrete, vapor barrier, etc.) a pressure build-up may result. Roof vents may be considered to relieve this pressure.

Wood Nailing Strips

All non-nailable decks require wood nailing strips at eaves, edges, walls, roof openings, etc. for proper securement of metal flanges. Nailers must be securely and firmly attached to the deck or through to its supporting members. Nailers shall extend not less than 1" beyond the apron or flange.

Roofing felts for all deck areas having a slope of ½" per foot or more must be back nailed and therefore non-nailable decks must be furnished with treated wood nailing strips treated with a material compatible with bituminous roofing.

Cold Storage and Freezer Buildings

Koppers will not bond its built-up roofing over these structures if insulation or insulation and vapor barrier is installed over the deck unless there is an adequately ventilated air space between the deck and insulated refrigerated area.

For procedures on non-bonded built-up roofing applications, consult a Koppers representative. When a guaranteed system is required, refer to KMM Specifications. Page 23.

Water-Retaining and Retarded Drainage

When the roofing system is subjected to common standing water or retarded drainage refer to the Special Applications Section. Page 15.

Temporary Roofing

Temporary roofing specifications are available for all Koppers Coal Tar Bitumen Built-Up Roofing Systems. Consult your Koppers representative for recommended specifications over various type decks for temporary roof construction.

General Application Procedure

Application of Bitumens
Recommended Weights per 100 sq. ft. (for estimating purposes only)

	Average Interply	Top Coating
Koppers Coal Tar Bitumen	25 lbs.	75 lbs.
Steep Asphalt	23 lbs.	60 lbs.

Average interply weights are based on long years of experience in good roofing practice, and take into account a reasonable variation in the amount of bitumen absorbed in different substrates, and the type of specification. Moppings of bitumen between felts shall be continuous.

Felt Shall Not Touch Felt
It is generally agreed that maximum strength between layers of felt is achieved by the thinnest practical glue line of bitumen. Too thin a layer starves the lap, whereas an excessive layer can permit interply movement on sloped roofs.

Flood Coat
The top pouring is most important, it must be thorough and uniformly covered with specification aggregate embedded into the bitumen **while the bitumen is still hot.**

Recommended Temperature Limitations:

	Kettle Temp.	Application Temp.
Koppers Coal Tar Bitumen	300-425°F	350-400°F
Steep Asphalt	350-475°F	400-450°F

When roofing bitumens are excessively overheated and/or held for long periods of time, their waterproofing qualities are greatly reduced, and at the same time the volume of fuming is increased. In order to achieve the maximum benefits of low fuming and unequaled waterproofing performance, it is imperative that Koppers Coal Tar Bitumen be heated within the temperature limitations listed above. Close supervision of heating is also good roofing practice for all bitumens.

If heat is desired during a holding period at the jobsite while material is not being drawn off and replenished as under normal usage, kettle temperature should be reduced and not permitted to exceed 350°F for Koppers Coal Tar Bitumen or 425°F for steep asphalt. The kettle should be full lid closed. These temperatures are applicable to job conditions and do not apply to holding or storage in kettles in excess of 4 hours. If bitumen is not to be used for periods over 4 hours, the kettle should be shut off.

Koppers Coal Tar Bitumen may be contained in 1000 gal. or greater capacity heated and automatically controlled closed vessel tankers at 375°F for periods not exceeding 96 hours.

Application of Felt
Plies of felt must be laid shingle fashion.

Where a water flow direction exists, felts should be applied so that the direction of flow is not against the laps. Broom or press all plies of felt into the hot bitumen and lay without wrinkles, buckles or kinks, so that the finished roof is free of pockets or blisters. Each felt ply shall be completely covered with a complete mopping of bitumen.

The number of plies are controlled by varying widths of the edge laps. Four-ply (4) roofing, for example, is achieved by lapping each ply approximately twenty-seven and one-half (27½) inches.

Koppers felts are marked at the factory with lap lines for this purpose. Except as specifically provided for in Koppers specifications, application of felt lapping methods other than shingle fashion will not be permitted.

When beginning a membrane roofing installation, appropriate width starting strips of felt shall be used at the starting point to achieve the specification ply build-up at that point so that successive felt applications will produce the ply requirements. Overlap ends of all connecting plies of felt (end laps) not less than 10 inches. End stripping or taping of these laps is not permitted.

Application of Koppers Bitumen and Aggregate Surface
The final application of Koppers Roofing is a triple weight application of Koppers Coal Tar Bitumen (approximately 75 lbs./sq.) into which is distributed an approved aggregate while the Bitumen is still hot.

Benefits of aggregate surfacing
1. Protection from foot traffic of other trades during construction and afterwards for routine roof maintenance.

2. Weight as additional protection for wind uplift.

3. Reduced surface temperature.

4. Even flow of water to the drains.

5. Fire protection from burning brands.

6. Protect bitumen from the actinic rays of the sun.

7. **Most important**—by using an aggregate surface, an additional 75 lb./sq. of Coal Tar Bitumen (the waterproofing agent) is included in the installation.

The application of Koppers Coal Tar Bitumen and aggregate must be done at the time the felts are applied; except in periods of hot, dry weather when the top surfacing may be delayed overnight.

When the specifier desires glaze coating and/or all work to be completed the same working day, he shall be responsible to so state this requirement in his specifications.

The aggregate surfacing must be applied into the top pouring while the bitumen is still hot so that a uniform layer will be embedded and adhered. The completed roof assembly will have a uniform aggregate surface. Depending on slag weights in certain parts of the country 400 lbs. of slag per square may be required. Occasionally on well applied roofs, small black globes known as "raspberries" or "blackberries" will form in the roof surface. These are not detrimental to the roof.

Aggregate Surfacing
The aggregate to be used should meet the ASTM Specification D1863-64. The basic requirement for this aggregate are as follows:

Sieve Size	Total Passing, Percent
¾"	100
½"	90-100
⅜"	40-70
No. 4	0-15
No. 8	0-5
Dust, max. pct.	0.5
Moisture, max. %	
crushed stone and gravel	0.5
Crushed roofing slag	5.0
Unit weight (loose)	
min. lb. per cubic ft.	60

Cold Weather Application
When roofing is applied at temperatures below 45°F, special precautions must be taken to insure the satisfactory performance of the finished roof. Before applying roofing, moisture, ice, snow, surface water, etc., must be removed from the deck.

Hot applied bitumens tend to congeal rapidly in cold weather. Extra care must be taken to set insulation or roofing as quickly as possible while the bitumen is still hot.

Do not heat bitumens above the maximum temperature limit listed above to compensate for rapid chilling. Insulated containers along with carefully timed material delivery methods, must be employed.

Base Sheet Alternate
When substituted for the first ply in a solid mop application specification, the Base Sheet shall be embedded in a solid mopping of Koppers Steep Asphalt followed by thorough brooming to eliminate air pockets, wrinkles, fish mouths, buckles, etc. The remaining three (3) plies of tarred felt shall be solid mopped with Coal Tar Bitumen in accordance with the specification.

When substituted in a nailing application specification, the Base Sheet may be used in lieu of the two nailed No. 15 tarred felts. When rosin sized or sheathing paper is a part of the original specification it shall remain and be applied beneath the Base Sheet. Edge laps shall be 4" and end laps shall be 6". The nailing pattern for the Base Sheet shall be 9" on center through the lap and 2" from the edge lap and stagger-nailed down the center of each sheet on 9" centers. (Note: This is approximately 100 nails per square.)

After applying a base sheet as the first ply on the four (4) ply roofing membrane, three (3) additional plies must be installed at once.

When applying the additional three (3) plies of tarred felt, lap each ply shingle fashion 24⅔ inches. Each ply must be solid mopped with Coal Tar Bitumen.

When specifying the Base Sheet alternate use of the designation **BS** as a subscript to the specification number, such as 210 BS (structural wood fiber deck).

Note: If Koppers Asphalt Coated Base Sheet (ASTM D-2626) is substituted for the first ply of the Coal Tar Bitumen roofing specifications, it must not be left exposed or used as a work surface or temporary roof prior to roof completion. Good roofing practice dictates that the total roofing membrane be complete the same day.

Specification No. 210 Supersedes Specs. No. 1, No. 12

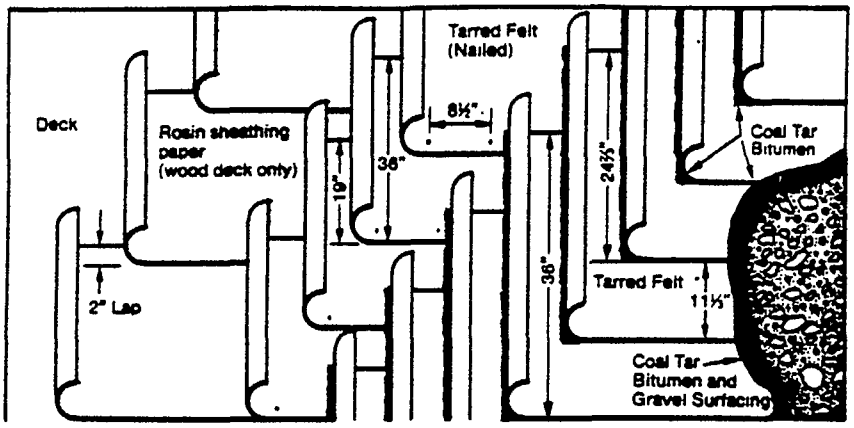

Materials Required per 100 sq. ft. of roof area (for estimating purposes)

Rosin Sheathing Paper*	1 ply
Tarred Felt (Nailed)**	2 plies
Tarred Felt (Mopped in Bitumen)	3 plies
Roofing Bitumen (3 moppings @ 25 lbs. each)	75 lbs.
Top Pour Coat	75 lbs.
Surfacing: Slag	300 lbs.
Gravel	400 lbs.

*Wood Decks only.
**Unless otherwise indicated.

Procedure

1. General Requirements on Pages 8 through 12 and Flashing Detail Specifications on Pages 16 through 20 are a part of this specification and must be adhered to where applicable.

2. When a vapor barrier and/or roof insulation are required, install in accordance with the manufacturer's instructions and comply with Koppers General Requirements and Special Conditions. Follow Specification No. 220 for roofing materials applied to insulation.

Application of roofing direct to roof deck:

1. Over the surface of the roof deck install one layer Rosin Sheathing Paper weighing approximately 5 lbs. per 100 sq. ft. Lap each sheet at least two (2) inches and nail sufficiently to hold in place. (Wood decks only.)

2. Install two (2) plies of Koppers Tarred Felt over entire surface lapped nineteen inches.

Nail on eight and one-half (8½) inch centers one (1) inch from edge lap.

Note: (This is approximately 100 nails per 100 sq. ft.) Nail shanks are to be of required length for maximum withholding power.

Lightweight insulating and gypsum roof decks require a base sheet as the first ply. Consult the appropriate deck requirements listed under General Conditions.

3. Over the entire roof area, apply three (3) plies of Koppers Tarred Felt lapping plies twenty-four and two-thirds (24⅔) inches. All laps shall be mopped with Coal Tar Bitumen the full twenty-four and two-thirds (24⅔) inches, so that in no place shall felt touch felt.

4. On short run slopes, such as on crickets and saddles, one-half inch per foot or more, nail each sheet of felt six (6) inches from the back edge on twenty-four (24) inch centers.

5. Pour over the entire surface of the roofing membrane, a uniform coating of Coal Tar Bitumen, and, while hot, embed not less than four hundred (400) pounds of gravel or three hundred (300) pounds of slag for each one hundred (100) square feet.

Suitable decks without insulation:

Plywood, wood plank, lightweight insulating concrete, poured and precast gypsum.

Slope requirements:

½" per foot maximum.

Specification No. 220 **Supersedes Specs. No. 5, No. 10, No. 23, No. 17wi, No. 27**

Non-nailable decks
Precast Concrete, Poured Concrete, Structural Wood Fiber*.

Roof Insulations:
Various Decks.

Slope requirements:
½" per foot maximum.

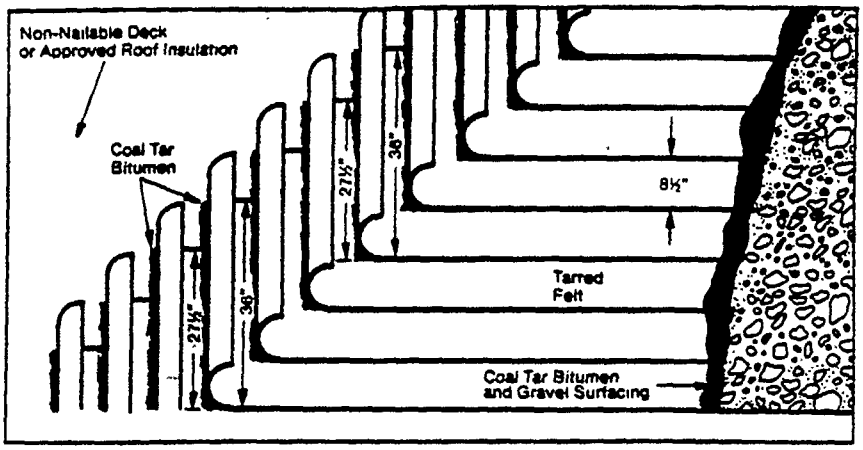

Material Required per 100 sq. ft. of roof area (for estimating purposes)

Tarred Felt (Mopped in Bitumen)	4 plies
Roofing Bitumen (for mopping @ 25 lbs. each)	100 lbs.
Top Pour Coat	75 lbs.
Surfacing: Slag	300 lbs.
Gravel	400 lbs.

*NOTE: On structural wood fiber decks, the first ply must be a Koppers coated base sheet set in a solid mopping of steep asphalt (see structural wood fiber, page 10).

Procedure

General Requirements on Pages 8 through 12 and Detail Specifications on Pages 16 through 20 are a part of this specification and must be adhered to where applicable.

When a vapor barrier and/or roof insulation are required, install in accordance with the manufacturer's instructions and comply with Koppers General Requirements and Special Conditions.*

1. Mop deck (or insulation—as applicable) completely with Coal Tar Bitumen.

2. Apply over the entire surface four (4) plies of Koppers Tarred Felt, lapping plies twenty-seven and one-half (27½) inches. Mop solidly between each 27½ inch lap with Coal Tar Bitumen so that in no place shall felt touch felt.

3. On short run slopes of one-half (½) inch per foot or more, such as on crickets and saddles, and when the deck permits nailing, nail along back of upper edge of each sheet on twenty-four (24) inch centers. Where deck does not permit nailing, nailing strips are required and each sheet must be nailed along back or upper edge at spacings to assure penetration of nailers.

4. Pour over the entire surface of the roofing membrane a uniform coating of Coal Tar Bitumen, and, while hot, embed not less than four hundred (400) pounds of gravel or three hundred (300) pounds of slag for each one hundred (100) square feet.

Water Cooled Roofs

- Spray Systems
- Ponded Systems

Water Retaining Roofs

- Process Water

Retarded Drainage Systems

- Controlled Flow

Discussion

Due to Coal Tar Bitumen's natural resistance to water, it may be utilized in the construction of built-up roofing membranes that will be expected to hold water over long periods of time. When applying a membrane that is required to hold water, follow Specification 220 for applications over non-nailable decks (four plies of No. 15 Tarred Felt set in solid moppings of Coal Tar Bitumen).

Note: The base sheet alternate should not be used.

When the roof is water cooled or has been designed to be continuously wet the top surfacing of bitumen and gravel must be applied as follows:

1. Pour over the entire surface of the roofing membrane a uniform coating of Coal Tar Bitumen. While hot, embed not less than four hundred (400) pounds of gravel or three hundred (300) pounds of slag for each one hundred (100) square feet.

2. All loose gravel or slag shall be swept from surface and a second uniform pouring of approximately eighty-five (85) pounds of Coal Tar Bitumen shall be applied over the gravel or slag, into which while hot, shall be applied a second layer of three hundred (300) pounds of gravel or two hundred (200) pounds of slag for each 100 square feet. The entire surface shall then be thoroughly broomed free from all loose gravel or slag. It is advisable to roll the finished surface with a light roller so that aggregate is thoroughly embedded.

3. All flashings will be KMM membrane similar to Specification No. 710 on Page 16 except that a layer of Standard Grade KMM membrane must be installed in KMM adhesive prior to the application of the KMM Aluminum membrane top ply.

NOTE: Roofs equipped with controlled flow drainage systems do not require the extra top pour and gravel application.

Design consideration

When designing a water cooled, water retaining or retarded drainage roof assembly, certain design criterion must be considered.

Note:

1. Due to the extremely heavy weight loads normally associated with retained water, pour and precast concrete or other heavy load bearing decks must be specified. Wood or metal decks should only be considered where ponded or standing water is at a minimum.

Note: Decks requiring a base sheet as the first ply of the roofing system are not permitted for this application.

2. Roof Structure design live loads for this application shall be a minimum of 50 psf and deflection shall not exceed 1/360 of the span, both in addition to the anticipated weight of the water. Insulation joints must be taped in single layer applications. Vapor barriers must be two ply and solid mopped. Use steep asphalt over metal decks. Wood must be treated to prevent warping (see "wood nailing strips").

3. At points where water pressure from a spray system may be excessive, the roof surface should be protected with treated board platforms or other suitable construction to break force of the water. These platforms should be laid on top of the roof surface and not fastened to the deck.

4. Insulation under a Water Cooled Roof should be of a type which is rigid, dimensionally stable with high compressive strength.

5. IT IS MANDATORY THAT THE WATER COOLING SYSTEM BE CLOSED DOWN AND THE ROOF DRAINED PRIOR TO COLD WEATHER. Neither roofing nor the structure will withstand the expansion caused by ice formation.

Flashing Systems
Built-Up Roofing Applications

(General Information)

Flashings are the terminal closures of a roofing system which perform a waterproofing, and in some systems, a decorative function. Flashings must be installed at all intersections formed by vertical surfaces. Their importance cannot be stressed too strongly Water entering the roofing system through flashings can result in water vapor forces which can destroy the effectiveness of the roofing and insulation.

Koppers flashings are an integral part of a Koppers roof. Designed for flexibility, KMM Aluminum flashings will provide maximum service life.

Flashing should be installed as roofing progresses to prevent possible water damage to insulation or deck under the roofing.

Note:

1. If bonded/guaranteed flashing is required, it must be installed in conjunction with a Koppers bonded/guaranteed roof and can be bonded/guaranteed for standard periods up to but not greater than the period for which the roofing is bonded/guaranteed. To be bonded/guaranteed, flashings must be set at least 8" above the roofing base

2. Metal Cap flashings are not bondable and are not included under any flashing bond/guarantee.

3. Metal work of any description used as flashing or a part of a flashing system is not bondable and is not included under any flashing bond/guarantee.

[illegible] Aluminum Flashings
for Uses with Coal Tar Bitumen Membrane Applications

Specification No. 710

Application Detail

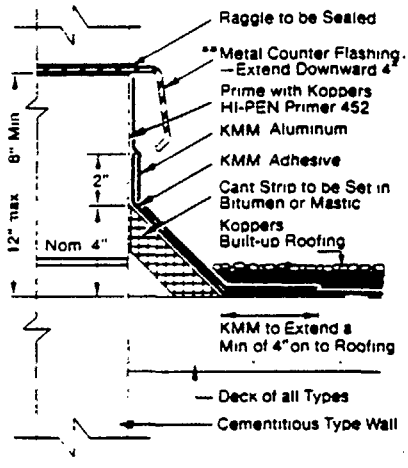

This specification is applicable for use with any built-up membrane roofing system where its terminal closure intersects a vertical surface, such as a parapet wall.

Koppers Flashing Specification 710 consists of an aluminum surfaced KMM membrane applied to waterproof the terminal closure of the roofing system. The KMM Aluminum membrane forms a waterproof flashing system by total adhesion to its substrate and through the use of joint heat fusion, a unique process whereby all contiguous joints are affixed together to develop a monolithic waterproof flashing system.

Application

This specification system shall use KMM Aluminum Grade membrane as the main flashing membrane.

1. When flashing is to be installed over a porous cementatious surface, apply a prime coat of Hi-Pen Primer at a rate of ½ to ¾ gal. per 100 sq ft. Allow to dry four hours minimum.

2. Each course of KMM Aluminum membrane shall be unrolled and cut to maximum length of 11' prior to setting in place.

3. Apply a coat of KMM Adhesive at a total rate of 1 to 1½ gal. per 100 sq. ft. to all areas of the completed roof membrane to be covered with KMM flashing, and on underside of flashing that will contact roof membrane.

4. While the adhesive is still tacky, set a layer of KMM Aluminum membrane into place extending from 4" onto the roofing membrane to above the top of the cant strip a minimum of 4". Adjacent pieces shall be side lapped a minimum of 4".

5. Rub, brush or roll thoroughly to obtain proper adhesion and to remove all entrapped air from under the flashing membrane.

6. Substrate-fuse flashing that extends above termination of roof membrane Interply-fuse all laps and that which extends onto roof surface.

7. The contractor shall thoroughly inspect the completed flashing system at the end of each day's work.

8. A high quality varnish-base aluminum paint may be applied to any exposed streaks or seams of bitumen.

9. Install metal counterflashing as required.

10. Complete the top surfacing of the roofing membrane to the base of the cant strip as may be specified.

**Note: Terminations of flashing specification #710 may be accomplished without a sheet metal counter flashing. See page 30.

General Information

There are numerous flashing details that have been proven by experience over the years. There are normally a number of acceptable construction details for accomplishing one purpose. The architect should select a detail that best serves the purpose under the various and different conditions concerned with the specific job at hand. In certain cases, slight modifications are necessary to adjust a proven detail to job conditions or one method may serve better than another.

The details shown in this manual are some suggestions based on experience. Space limitations prohibit listing many others.

Design or selection is a responsibility of the architect.

Koppers representatives are available to review flashing details to assist the architect in providing the best details for specific jobs.

Raised Edge

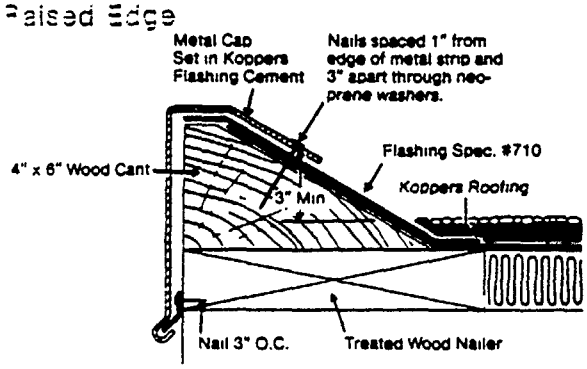

Relief Joint

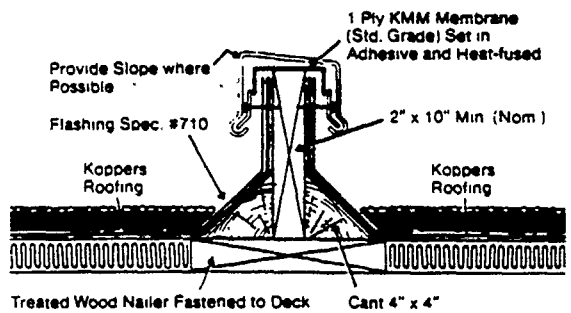

Abutment Support

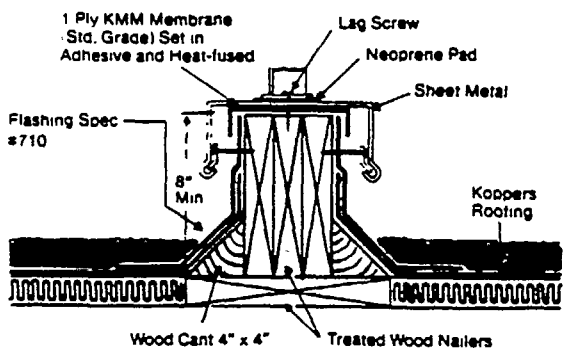

Parapet Precast or Poured Concrete

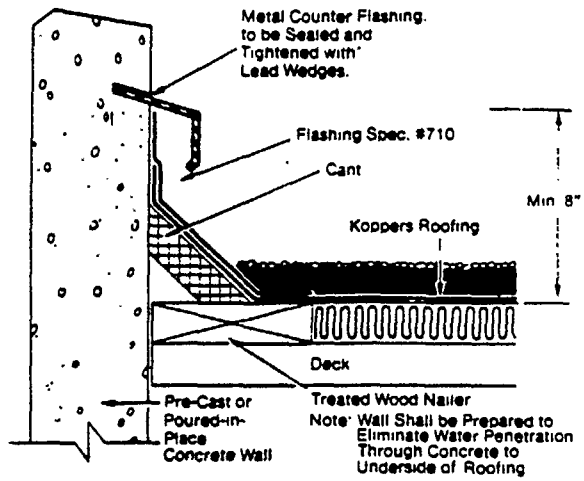

Parapet, Metal Curtain Wall

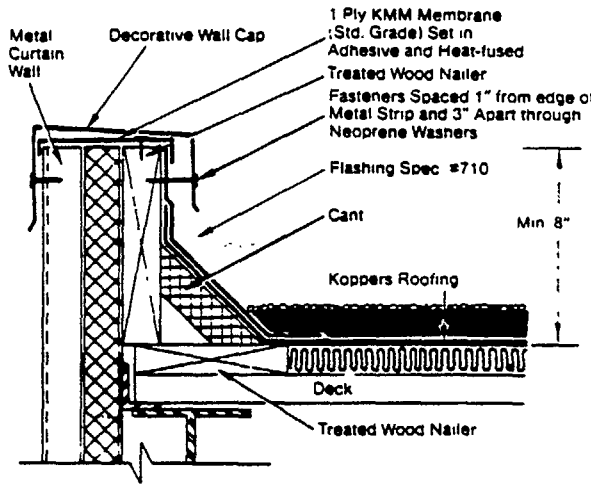

Parapet, Min. Slope

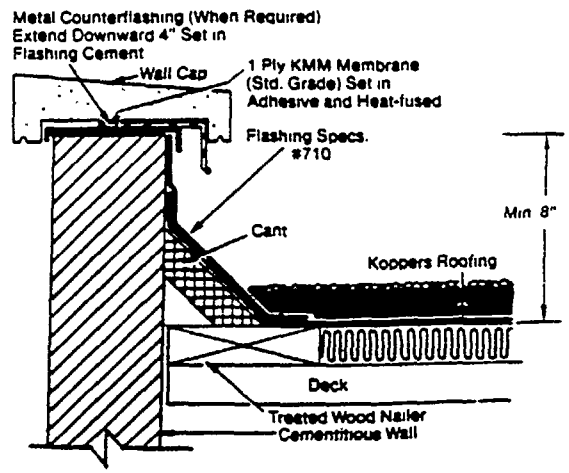

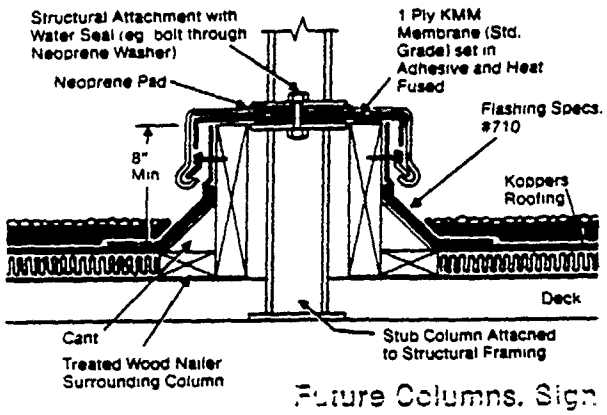

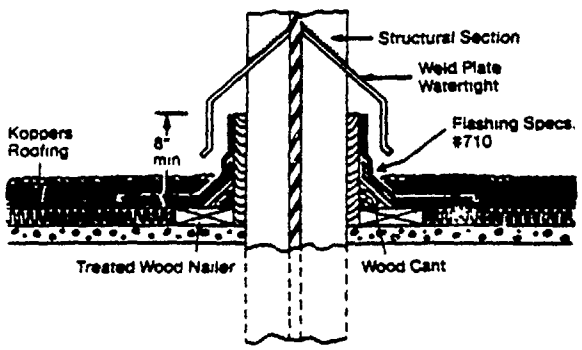

Future Columns, Sign Supports and Angle Irons

At all locations where stub or future columns, sign supports and angle irons are to penetrate built-up roofing, Koppers recommends wooden curbed base units with cant strips to be installed to accept KMM flashing systems. Where structural steel section extends beyond "stub" height, metal cap flashing with tight fit to the structural section must be fabricated and continuously welded to the projection to assure a watertight metal cap.

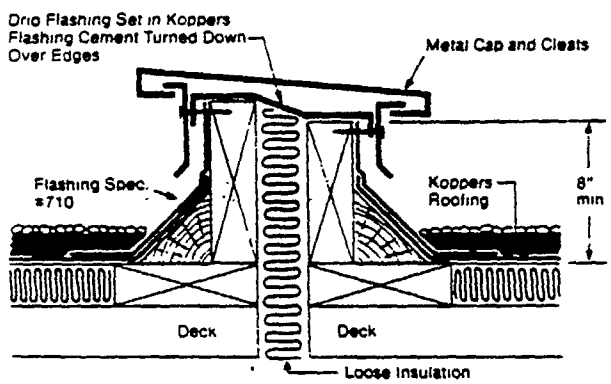

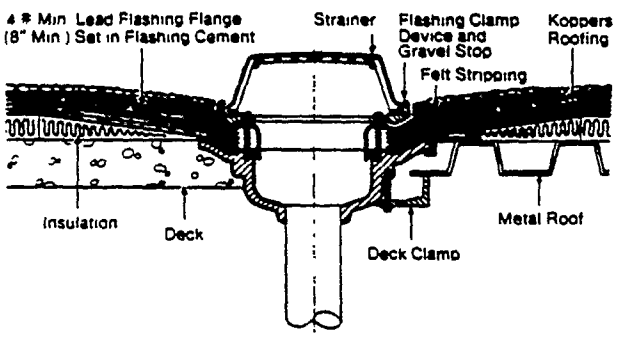

Expansion Joint

Curb expansion joints are to be flashed in accordance with Koppers specifications for parapet walls. Metal cap must be designed to expand so as not to disturb flashing.

It is the responsibility of the designer of the building to provide for adequate expansion joints.

For the protection of the roofing system against splits caused by expansion and contraction, Koppers recommends that an expansion joint be installed: (1) on roof areas larger than 200 feet in each direction, (2) at all places where the structural supports and roof assembly change direction, (3) where type of adjoining deck materials change.

Where control, expansion, or contraction joints are provided in structural steel, deck material, or deck system, provisions must be made for continuation through the roofing system. See (Expansion Joints) Page 11.

Roof Drain

All roof drains shall be provided with metal roof drain flashing flanges which extend at least 12" beyond drain opening and shall be stripped with felt in accordance with drain detail. All drains should be provided with expansion joint sleeves.

The sheet metal flange furnished with the drain must be cemented to the surface of the felt with hot Coal Tar Bitumen or flashing cement. Over the flange apply, with alternate moppings or trowelings, two (2) reinforcing plies of felt so that the first extends not less than three (3) inches beyond the outer edge of the flange, and the second not less than six (6) inches.

Roof drains must be of a type provided with a wide lead or copper flange. Strainer construction should provide adjustment for meeting variations in roof level or slope.

To obtain proper drainage, roof drains should be located at points of lowest expected deflection in roof deck.

Note: Special care must be taken to prevent bitumen migration into drain openings.

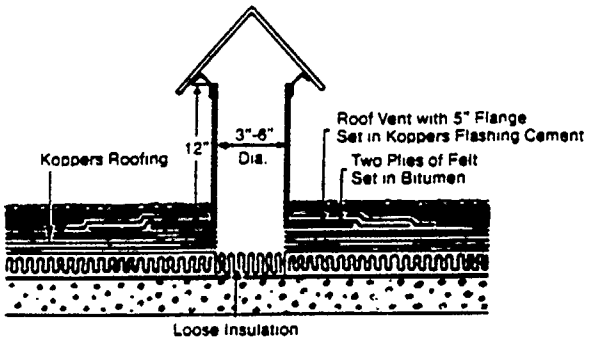

Roof Vent

Koppers does not recommend occasional or spot vents through the roof as the only venting method or a substitute for underside or continuous vented systems. There may be certain instances where spot or mushroom type vents might be deemed advisable by the designer for a new building (eg. at expansion joints for vent relief on long run underside continuous venting systems, etc.)

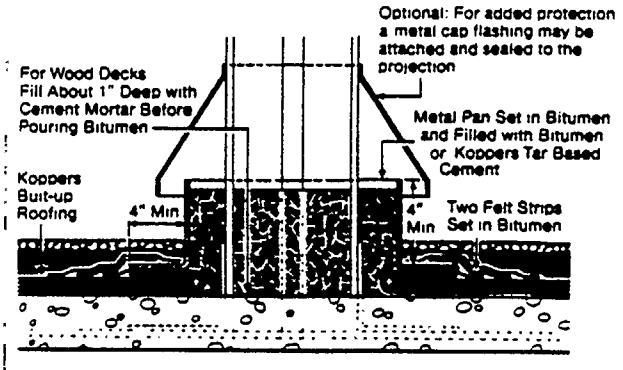

Pitch Pocket

Although controversial, the "Pitch Pocket" is one of the most frequently used design details.

The sheet metal flange must be cemented to the surface of the felt with hot coal-tar-bitumen or flashing cement. Over the flange apply, with alternate moppings, two (2) reinforcing plies of tarred felt so that the first extends not less than three (3) inches beyond the outer edge of the flange and the second no less than six (6) inches.

Fill metal pan with hot coal-tar-bitumen or flashing cement. Paint exposed sections of all reinforcing rods with dampproofing paint.

Walkways (Treated Wood Walkway)

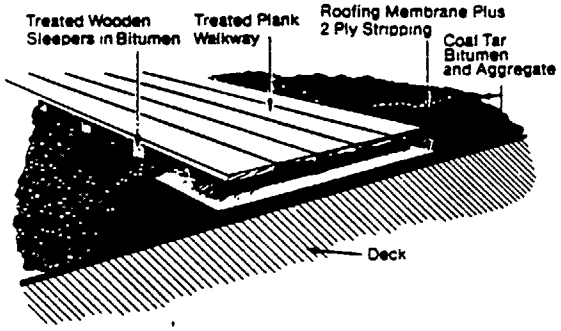

Traffic Pad

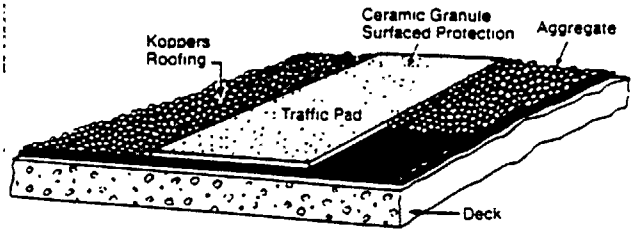

Roof Opening

Curbs extending a nominal 8 inches to 12 inches above roof surface shall be provided at all openings for skylights, ventilators, expansion joints, etc., to provide for installation of KMM flashing.

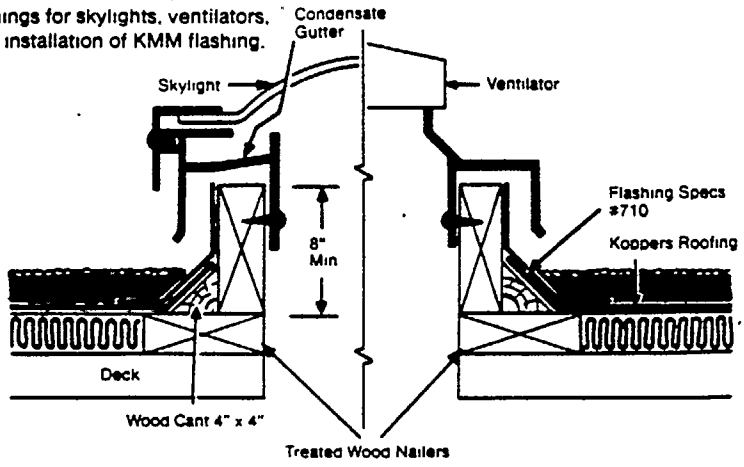

Tapered Cant

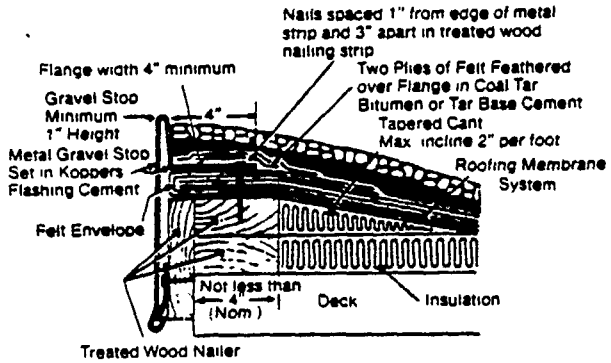

Tapered Cant

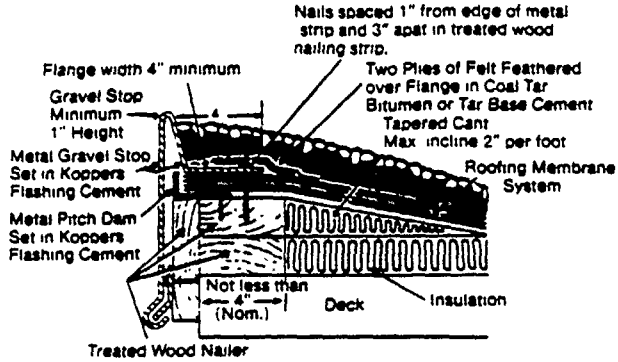

Hanging Gutter

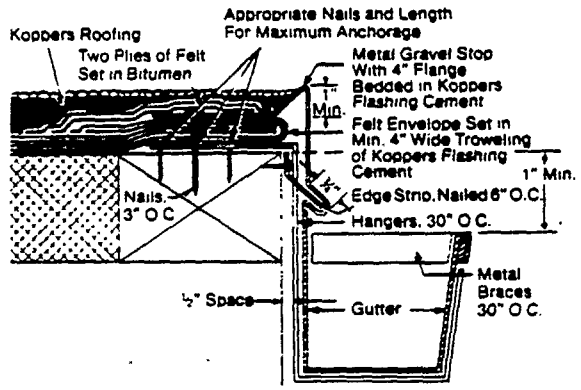

Vented Edge

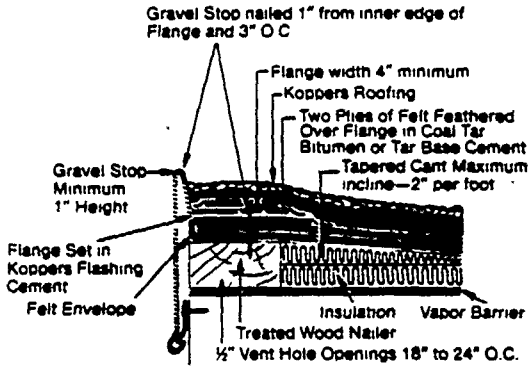

Vent Pipes, Stacks, Flagpoles, and Other Projections

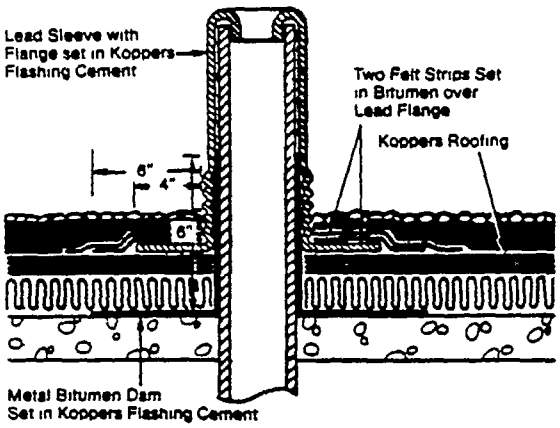

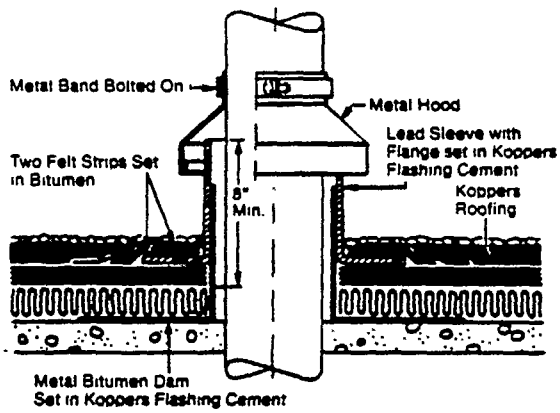

All vent pipes, stacks, flagpoles, or other projections penetrating the built-up roofing, whether indicated on drawings or not, must have a proper metal sleeve flashing with flange, pan flashing with flange or other flanged flashing installed.

Behind metal sleeves and beneath the roofing membrane next to deck install a metal bitumen dam as shown in detail. The sheet metal flange must be cemented to the surface of the felt with a mopping of hot Coal Tar Bitumen. Over flange apply, with alternate moppings, two (2) reinforcing plies of felt so that the first extends not less than three (3) inches beyond the outer edge of the flange and the second not less than six (6) inches.

KMM® Membrane Systems

Materials and System

Description

KMM membrane is a versatile, prefabricated sheet of cold-applied roofing and waterproofing material. It is designed for application in roofing, reroofing, maintenance roofing, foundations, plazas and various other areas of construction where effective waterproofing is required.

KMM membrane is supplied in two grades:

Standard KMM Membrane

Standard KMM membrane is a five-layer laminate composed of a thick, flexible plastic core protected on each surface by a layer of modified bitumen and an outer film of polyethylene.

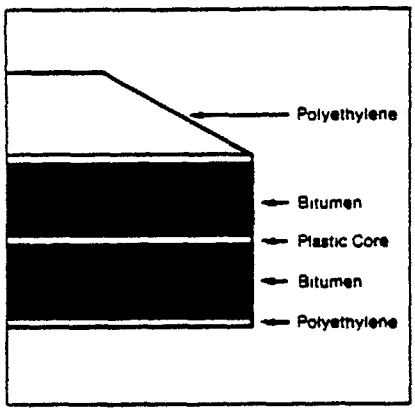

Aluminum KMM Membrane

Aluminum KMM membrane is a five-layer laminate composed of a thick, flexible plastic core which is protected on each side with a layer of modified bitumen. The top surface is a heavy, embossed aluminum sheet and the bottom surface is a film of polyethylene.

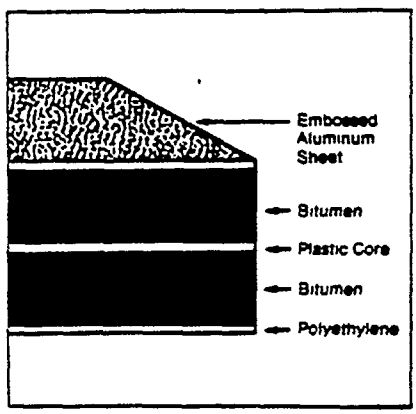

Both versions of KMM membrane are supplied in the form of compact, ready-to-apply rolls.

Both KMM membranes are designed for use in various roofing and waterproofing applications.

Standard KMM membrane, loosely laid, is normally used in roofing systems which incorporate an aggregate surface or where protection from the atmospheric elements

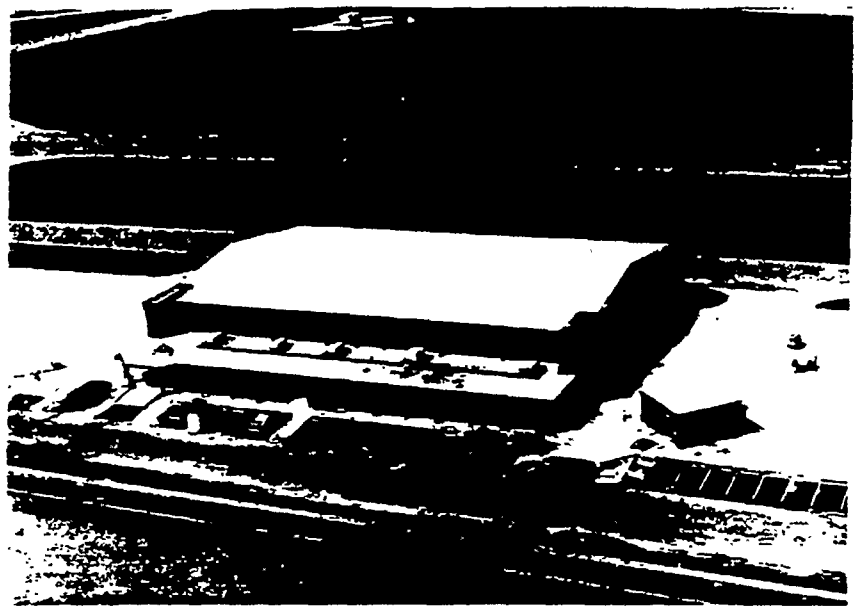

is afforded to the KMM surface by other means. Standard KMM membrane is appropriate for use in vertically as well as horizontally applied waterproofing systems where surface protection is specified.

Aluminum KMM membrane is ideally used in roofing systems in which the roof slope is too steep to permit aggregate surfacing. It is also employed in flashing systems.

KMM membrane has good elongation properties to withstand normal structural movement when recommended architectural practices are followed. It is suitable for application over most decks and commonly used insulating materials which provide continuous support for the KMM membrane.

KMM membrane is simple to install. It results in a completely waterproof system. It is factory-made and provides a factory-assured quality material of uniform thickness and composition.

The function of the bitumen covering is to protect the central plastic core from damage during installation, to provide the basis for the heat fusion between the sheets and to add to the water resistance of the laminate.

The adhesion of the bitumen to the central core is positive and allows enough flexibility to give a floating membrane effect in service.

The KMM roofing system can allow contractors to install roofing on new buildings at a much earlier stage than with conventional processes.

Product Information KMM Membrane

	Standard KMM Membrane	Aluminum KMM Membrane
Roll Size	43" x 33 L.F. 118 sq. ft. 107 sq. ft. coverage	43" x 33 L.F 118 sq ft 107 sq. ft. coverage
Thickness (nominal)	160 mils	120 mils
Weight (nominal)	120 lbs./roll (includes packaging & core)	95 lbs./roll (includes packaging & core)

KMM Adhesive

A rapid setting, asphalt base adhesive that bonds KMM Membrane to most surfaces.

Package Size: 5 gal. containers.

Weight: Approx. 55 lbs. (includes container weight).

Color Coatings for KMM Aluminum Membrane

Field applied coatings for KMM Aluminum membrane are available in 14 colors. For color selection consult Koppers Master Color Selection Chart 560-L under Koppers Acrylic Emulsion No's. 600 and 610.

General Information

The data contained herein is primarily oriented toward roofing systems. However, much of the information is also applicable for waterproofing systems. Contact your Koppers representative for specific data concerning KMM waterproofing and/or further information pertaining to KMM roofing systems.

KMM Membrane is not intended to offer chemical resistance and must not be used on roofs subjected to corrosive or otherwise damaging solutions, vapors, etc..

Roof Structure System

In any building, the performance of the roofing will be affected to some degree by all of the parts of the roof structure system as well as the inside and outside atmospheric environment. Each component should be investigated for its compatibility with each of the others. The roof structure system may include any or all of the following:

- Outside air conditions
- Roofing system
- Peripheral details (flashings)
- Insulation (if present)
- Vapor barrier (if present)
- Structural deck, including sub-purlins (supports)
- Structural framing
- Air space (if present)
- Ceiling (if present)
- Interior air conditions

You will find information in this manual pertaining to materials and application methods other than for KMM roofing. They are offered to assist the designer in establishing their normal position in the roof structure system. They should not be construed as part of the KMM roofing system, as endorsement or as part of the designated specifications, other than to establish a suitable roofing base in the roof structure system.

The proper design, specification and positioning of the various components of the roof structure system are the responsibility of the building owner or his designer. Any subsequent failures due to either the installation or lack of installation will not be Koppers responsibility.

General Deck Requirements

The deck is the base over which the KMM membrane or insulation and KMM membrane is applied. Where the term deck is used without reference to insulation, it shall designate the surface over which roofing is to be applied. All decks shall be clean, smooth, dry, rigid and free of debris. Any deck defect shall be corrected before application of roofing. All decks shall be installed in accordance with the deck manufacturer's specifications, and shall be in compliance with Koppers General Requirements.

In approving any deck as satisfactory to receive a KMM system, only the deck surface is accepted. It is the responsibility of the building designer and the deck manufacturer to provide for expansion and contraction in a manner that will provide a stable base for the KMM membrane, for support of maximum anticipated loads, for secure attachments vertically and laterally, and for the selection of the deck material and construction details including their ability to contain bitumens or adhesives used for attachments of the KMM membrane or other components of the system. Koppers will not assume responsibility for deck defects, or the effect of deck defects on Koppers roofs.

The placing of conduits, bolt heads, etc., above the roof deck and below the roofing membrane is not recommended.

All projections or openings in the deck should be completed prior to the application of the roofing. Insulate all hot water and steam pipes which project through or are near the surface to be roofed or waterproofed. This is to prevent possible damage to the KMM system.

Condition of Roof Surfaces to Receive KMM Membrane

All surfaces must be dry, frost free, reasonably smooth, clean, rigid and free from debris, loose materials, projections, holes, release agents or other contaminants which might cause rupture of the membrane and/or adversely affect the KMM membrane application and performance. Dust shall be removed from the surface immediately before application of the KMM membrane system, especially from those which incorporate the use of KMM Adhesive to adhere the membrane to its substrate.

a. Metal Decks: Decks of this type must also be free from loose rust and oily substances. Deflection should not exceed 1/240 of the span. Decks of this type are not suitable for application of KMM membrane without insulation being placed between the deck and the KMM membrane.

b. Poured Portland Cement, Concrete, Poured Gypsum, Lightweight Insulating Concrete: Where insulation is specified, nailing strips may be set into and flush with the deck surface, and level with the lower surface of the insulation. These strips should be spaced not more than three feet apart and placed parallel with the slope rather than perpendicular to the slope of the roof. Insulation may then be nailed to the strips using fasteners as agreed upon by Koppers and the architect prior to installation.

All concrete and masonry surfaces must be cured, dry and free of loose material. All cracks, holes, voids and open areas shall be wetted with water and then carefully filled with Portland Cement Mortar, struck flush, and permitted to dry.

c. Precast Decks (concrete, gypsum, wood fiber): Decks of these types, whether grouted or not, shall be caulked with Koppers Flashing Cement which shall be applied so that the top surface is level and smooth. Strip all joints with a 6" layer of felt stripping set in flashing cement, or standard grade KMM membrane set in KMM Adhesive. This is recommended to assist in leveling uneven joints and to bridge the joint openings, thus providing a better surface for the roofing system materials.

Note: KMM Aluminum membrane should not be applied directly to wood fiber decks. When specified over wood fiber decks, provisions must be made between the aluminum and the deck before the KMM membrane is applied. This deck preparation can be a coated base sheet set in steep asphalt.

d. Plywood (exterior grade): Wood shall be well-seasoned, dry and preferably treated. End joints shall have adequate bearing. Loose or void knot holes, large cracks, etc., shall be covered or filled in with appropriate material over which a cushioning strip of KMM membrane is applied prior to roof membrane installation. All joints shall be taped with glass fiber roofing tape or reinforced kraft paper tape 6" wide, set in KMM Adhesive at the rate of 1½ gallons per 100 ft.^{2}.

Plywood shall be a minimum of ½" thickness.

Lightweight Insulating Decks

Lightweight insulating decks include lightweight aggregate concrete (20 to 40 lbs. per cu. ft. oven-dry density), foamed concrete, gypsum and thermosetting asphaltic decks. For any adhered membrane, it is necessary that the lightweight insulating deck system be capable of venting excess water vapor to the underside.

When the KMM Standard Grade floating membrane system is used, spot venting through the roofing membrane or notched perimeter nailers will be adequate to prevent vapor pressure build-up under the membrane. If board-type insulation is to be applied over a lightweight insulating deck, provisions must be made between the fill and the board insulation to prevent fill moisture from affecting the insulation.

KMM Aluminum membrane should not be applied directly to lightweight insulating roof decks. Where specified over lightweight insulating roof decks, provisions must be made between the Aluminum KMM membrane and the deck before the KMM membrane is applied. This deck preparation can be a coated base sheet nailed with approximately 100 approved nails per square.

In addition, where KMM Aluminum membrane is specified, lightweight insulating decks shall have sufficient cohesive strength to provide firm attachment of the roofing to

the deck and framing to prevent wind uplift damage or blowoffs. Koppers will not be responsible for any failure of the insulating deck system or for disbonding of the roofing from the surface of the deck.

Board Type Insulations

These insulations come in varying thicknesses and sizes. The insulation manufacturer's specifications shall be followed and, in addition, shall be in compliance with Koppers General Requirements. Generic types of insulation board, such as fiber glass, perlite and fiberboard, are approved. For acceptance of other types, consult your local Koppers sales representative.

The roofing insulation must be kept dry at all times. It must be of a type approved by Koppers. It should only be applied over a deck complying with all of the General Requirements. Work must be scheduled to prevent damage from other trades and equipment.

Roofing equipment must be of a type which will not damage the insulation used. Broken or damaged insulation sheets can only be used when the damaged portion is cut out. These cut-out pieces may be used for application areas where fill-in pieces are required.

No more insulation shall be laid in a day than can be protected by KMM membrane in case of sudden weather changes. Edges of insulation shall be brought closely together and shall not be forced into place. Where insulation joins vertical surfaces, the insulation shall be cut in a neat manner, allowing at least ½" clearance.

When more than one layer of insulation is used, joints in each layer shall not coincide. All layers shall be parallel to preceding layers.

Vapor Barrier

Vapor barriers are normally used where the heat flow direction and/or humidity within the building, during any climate or occupancy cycle, might cause the dew point or condensation to occur under the built-up roofing within the insulation chamber. It is important that the vapor barrier, when installed, provide a continuous seal, (including ventilators, skylights, peripheral walls, and other terminations) from the source of the water vapor.

Other Requirements
Materials Protection

Although KMM membrane is waterproof in the roll, good practice dictates that it should be protected when stored outside by raised platforms and adequate cover. In cold temperature periods, inside warm storage is necessary prior to use.

Wood Nailing Strips

All non-nailable decks require wood nailing strips at eaves, edges, walls, roof openings, etc., for proper securing of metal flanges. Nailers must be securely and firmly attached to the deck or through to its supporting members. Nailers shall extend not less than 1" beyond the apron or flange.

Nailers should be treated to preserve their condition and hence their nail retentive power for the expected life of the roofing. Creosote or oilborn preservatives may affect the roofing they contact and should not be used. Nailers should be pressure-treated with a waterborn preservative such as Wolman[4] salts or with penta applied in a liquified petroleum gas carrier such as the Cellon[4] process.

Wolman[4] and Cellon[4] are registered trademarks of Koppers Company, Inc.

Waterstops
(Temporary Protection)

At the end of each day's work, waterstops must be installed to protect the insulation or substrate against water penetration. Waterstops consist of a single ply of KMM membrane (Standard or Aluminum Grade) extending a minimum of 6" beyond the terminal edge of the insulation. The leading edge of the membrane is then substrate-fused to the deck and top-sealed. Waterstops should be continuous and tight.

These temporary protective measures must be detached cleanly when work is resumed to prevent blocking moisture vapor movement to vented edge details.

Cold Storage and Freezer Buildings

KMM roofing systems may be used in cold storage and freezer building applications; with or without a ventilated air space between the deck and the insulated refrigerated area. For specific recommendations regarding design details for these applications, consult your local Koppers representative.

Attachment of Deck and Insulation Components

Recommended methods of attachment of insulation to its substrate include hot bitumen, cold-applied adhesives. Suitability of the kind of attachment is dependent upon the type of insulation and its substrate. This should be investigated by the specifier along with the various requirements, including wind uplift resistance, as described in the local building code and/or policies of the insurance agencies involved.

Where it is not possible to attach insulation with hot or cold adhesive, Koppers will accept the use of mechanical fasteners providing insulation manufacturer recommendations are followed, and the fastener is one of the following:

Dekfast
Grefco Perma-fastner
GAF Gaftite

The following types of insulation require 5 fasteners per 2' x 4' board, and 6 fasteners per 3' x 4' board: isocyanurate, phenolic, urethane, and urethane composite.

Where the formation of ice can occur on KMM Aluminum, cover mechanical fasteners with 6" square pads of base sheet bonded with KMM adhesive in areas of ice formation.

Koppers will not be responsible for any damage caused by or as the result of unsatisfactory attachment.

Expansion Joints (Building)

KMM roofs, especially those employing the floating membrane concept, are able to withstand building movement to a greater degree than conventional materials, but good design practices dictate that expansion joints should be employed for protection of the overall roofing system. The use, location and design of building expansion joints should be taken into consideration at the time of the original building design.

Although provisions for adequate expansion joints are the responsibility of the building designer, Koppers offers the following recommendations for the protection of the roofing system due to stresses caused by expansion and contraction of the building. Building expansion joints should be installed:

1. On large roof areas at least 200 feet in each direction.

2. At all places where the structural supports and roof assembly change direction.

3. Where type of adjoining deck materials changes.

Where control, expansion or contraction joints are provided in structural steel, deck material or deck system, provisions must be made for their continuation through the roofing system. Koppers realizes that in a climate-controlled building there may be little or no expansion after the building is in use. However, building expansion joints are still recommended based upon the following points:

1. During construction, the building will not be under a steady-state temperature/humidity condition so that thermal and moisture movement can be sufficient to disturb and possibly injure the roofing system.

2. If no building expansion joint is provided, the owner must keep the building at the steady-state temperature and humidity condition at all times, as holiday shutdowns may injure the roofing system due to the movement of the building system resulting from temperature/humidity variation.

3. If the occupancy is fairly large, the sudden entrance on a rainy day of many rain-soaked employees may cause rapid moisture movement in the roof structure system which may damage the roofing system.

Base Sheet Underlayment

When a nailed base sheet is to be used as an underlayment for KMM membrane, edge laps are to be 4" and end laps are to be 6". The base sheet shall be fastened with approved nails and the pattern shall be on 9" centers, 2" from the edge lap and down the center of each sheet. (Note: this is approximately 100 nails per square.)

Traffic Surface

Where heavy traffic is anticipated over KMM Aluminum Membrane, a suitable traffic surface should be provided. Koppers Traffic Pad is recommended and is attached with KMM Adhesive.

Recommended Slopes for KMM Roof Systems

Koppers recommends that the maximum roof slope for loose stone topping systems be one inch per foot and that the maximum slope for the emulsion-aggregate system be one and one-half inches per foot.

There is no maximum slope on the KMM Aluminum roofing system.

Inspection and Patching

All KMM membrane must be carefully inspected for construction damage and imperfect heat fusion prior to the installation of the protective topping. Any holes or tears must be patched with the appropriate KMM membrane. The patch must extend at least 4" in all directions from the edges of the tear or puncture. Seal into position with inter-ply fusion and top sealing for Standard KMM membrane. Seal Aluminum KMM membrane by inter-ply fusion.

Streaks or seams of bitumen on Aluminum KMM membrane may be touched up by high quality varnish-base aluminum paint.

Underwriters Laboratories

Underwriters Laboratories, Inc. Building Materials Directory, Built-up Roof Covering Materials, lists KMM Membrane for use in construction of class A, B, or C built-up roof coverings. Specifier should consult this directory for complete details.

Guarantee

A five-year renewable guarantee on roofing is available. See Page 6 for further information.



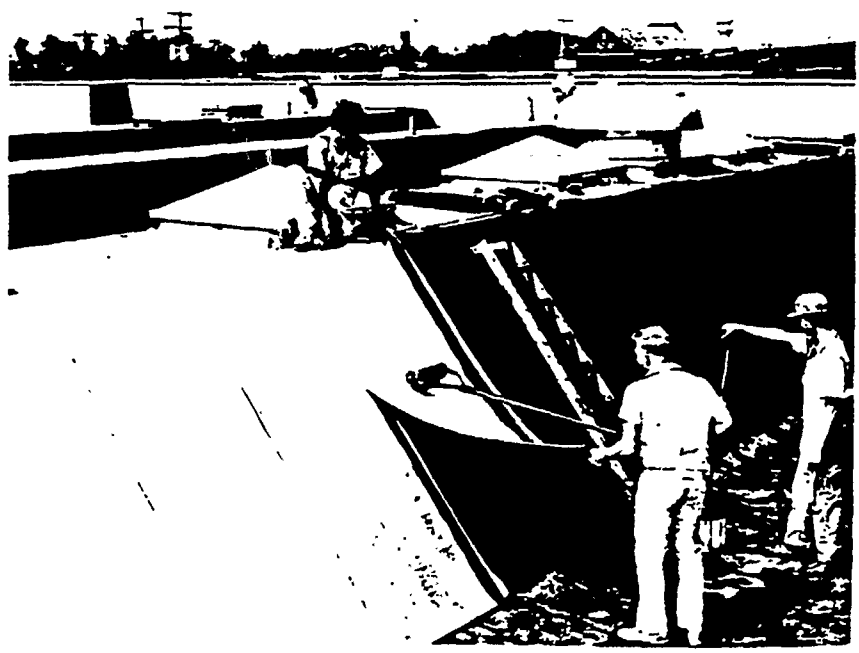

Terminology

Heat Fusion

Heat fusion is a general term used to describe specific methods of adhesion of one layer of KMM membrane to another surface. In the process of heat fusion, the bitumen of the membrane is heated with a direct flame until it is plastic enough to flow under pressure. When pressure is immediately exerted to this softened bitumen, it fuses to the surface to which it is applied. Specific types of heat fusion are described below. It should be noted that the external plastic film present will break and draw apart with the proper application of the flame.

Substrate fusion is the specific type of heat fusion used to secure the KMM membrane film to a substrate. The underside of the KMM membrane is heated until plastic. The heated underside is then quickly pushed or forced against the substrate surface so that a slight "run-out" of bitumen from beneath the edge of the membrane is observed. A 4"-wide fused waterproof seal is to be obtained.

Interply fusion is the specific type of heat fusion used to obtain a waterproof seal between two overlapping sections of KMM membrane. In practice, the flame is applied simultaneously to both surfaces of Standard KMM membrane until each becomes plastic. For Aluminum KMM membrane end joints, heat the bottom of the overlapping section until it becomes plastic while simultaneously heating the aluminum surface of the in-place KMM membrane. The two surfaces are pressed together to form a fused joint or seam of at least 4" in width. A slight "run-out" of bitumen from the interply joint is to be obtained.

Top sealing is the specific type of heat fusion used to make the second waterproof seal at substrate-fused and interply-fused joints. **It is applicable only to Standard KMM membrane.** Top sealing is accomplished by heating a 2" to 3" section at the edge of the top sheet until plastic. To develop a smooth, continuous filled joint, move the softened bitumen from the top sheet over and back into the previously fused joint area with a roundnosed trowel.

Heat fusion equipment: Very satisfactory fusions can be obtained using a high heat output propane torch such as Linde Air Division, Union Carbide Corp. "Swirl Jet Tips #6-633922". As an additional safety precaution, it is recommended that the torch handle be equipped with an automatic shut-off valve. A roundnosed bricklayer's trowel, such as Marshalltown Trowel Co. No. 48 gauging trowel, is recommended for substrate fusion, interply fusion and top sealing.

Consult your local Koppers representative for further information.

Aluminum Joint Connection
The overlapping joint is maintained on Aluminum KMM membrane by the heat-fusion attachment of the upper sheet to the exposed 4" bitumen band on the lower sheet. During interply fusion of this joint, a bitumen bead shall be forced from between the mated edges which is then covered by the aluminum extension tab on the upper aluminum sheet. A slight heating of the edge of the upper aluminum surface while pressing with a trowel will also be beneficial in obtaining a uniform waterproof bond.

Bituminous Aggregate Topping (BAT)
BAT consists of a combination of graded gravel and asphalt emulsion. See Page 26 for complete description.

Recommended quantity is 650 to 700 lbs. per square (approximately ¾" to 1" thickness).

Loose Aggregate Topping
Loose aggregate topping consists of a smooth stone aggregate applied loose over the KMM membrane at a minimum rate of 1,000 lbs. per square (approximately 1½" thickness of loose stone).

Note 1: If smooth gravel is not available, Stonemat must be installed prior to aggregate surfacing. Aggregate application by gravel buggy is recommended.

Note 2: Slag is not a permissible aggregate.

Reroofing Specifications

Conditions of Surface to Receive KMM Membrane

a. Gravel Surfaced Roofs: Remove loose gravel and remove any existing blisters, buckles, etc. Apply a minimum ½" insulation in an approved manner prior to application of KMM membrane.

b. Smooth Surfaced Roofs: Remove or repair, as necessary, any blisters or other abnormality of the existing membrane to give a surface which is free of sharp edges prior to the application of KMM membrane. Cushion cuts or open areas with a layer of Standard KMM membrane set in KMM Adhesive and substrate-fuse the edges.

Prior to applying KMM Adhesive for KMM Aluminum Membrane application, prime roof surface with Koppers 452 Primer at the rate of approx. ¾ gallon per 100 ft.^{2}.

c. Moisture in the Existing Roof: Aluminum KMM membrane (Specification No. 630) is always adhered to the substrate. It is not recommended for application directly over surfaces which contain moisture without taking precautions to allow venting of the entrapped water vapor.

Standard KMM membrane (Specification Nos. 610 and 620) is loosely laid and ballasted by an aggregate topping. This system will tolerate moisture in the substrate and, depending upon the existing situation, extra precautions may be required such as spot or perimeter venting.

Note: For recommendations regarding specific precautions to be taken, see your local Koppers sales representative.

Loose Aggregate Topping and BAT Installation Information

Loose Aggregate Top Surfacing for Specification 810

A. Aggregate:
Either smooth gravel, crushed aggregate or stone, graded to ¼" nominal size (S.P. No. 57—U.S. Deoartment of Commerce Simplified Practice Recommendation R-163). See "Aggregate Size Table" below

B. Application:
1. Over the KMM membrane, apply loose smooth aggregate at the rate of 1000 lbs. min. per sq. (approx. 1½" thickness of loose stone).

Note: If smooth gravel is not available, Stonemat must be installed prior to aggregate surfacing. Aggregate application by gravel buggy is recommended.

Apply crushed gravel loosely onto the Stonemat at the rate of 1000 lbs./sq. minimum (Approx. 1½" thickness).

2. Aggregate application by gravel buggy is recommended. Slag is not a permissible aggregate.

Loose's Bituminous Aggregate Topping (BAT) —Top Surfacing for Specification 820

BAT topping consists of graded gravel and KMM Aggregate Binder Emulsion.

The BAT is applied to the roof as topping at the rate of 650 to 700 lbs. per square (approximately ¾" to 1" thickness).

A. Materials
KMM Aggregate Binder, a cold applied asphalt emulsion, was formulated for binding the specified aggregate applied over Standard KMM roof systems to protect the KMM membrane. KMM Aggregate Binder emulsion is not intended for use as an adhesive or repair material. Binder should be kept in warm storage during cold weather to keep from freezing.

Aggregate: The gravel aggregate is to be clean and size graded to nominal ⅜" round gravel. (This is equivalent to S.P. No. 8—U.S. Department of Commerce Simplified Practice Recommendation R-163).

B. General Application Instructions
Preparation:
1. BAT is applied when the KMM roofing and flashing applications are complete.

2. Roof surface must be free of ponded water.

Application of BAT Topping:
BAT is applied in three steps resulting in a protective topping weighing 650-700 pounds per square. The steps are as follows:

1. Gravel aggregate is applied at the rate of 450-475 lbs. per 100 sq. ft. on the finished KMM roof surface. Aggregate application by gravel buggy is recommended.

2. KMM Aggregate Binder emulsion should be stirred thoroughly until the material is of uniform consistency. KMM Aggregate Binder emulsion is sprayed on the aggregate at the rate of 3 gallons per 100 sq. ft. using suitable spray equipment. Do not apply KMM Aggregate Binder emulsion when rain or freezing temperatures are expected within 24 hours following the completed application.

3. An additional layer of aggregate is then applied over the binder at the rate of 200-225 lbs. per 100 sq. ft. to achieve a finished surface. Aggregate application by gravel buggy is recommended. Heavy accumulations of aggregate should be evenly distributed. Wooden or steel implements should not be used. Aggregate should be applied as soon as possible and no later than 24 hours after applying KMM Aggregate Binder Emulsion.

Aggregate Size Table

Grading Requirements for Coarse Aggregates from ASTM Standard C 33—Standard Specification for Concrete Aggregate Use Size #8 in making Bituminous Aggregate Topping (BAT). Use Size #57 for Loose Aggregate Topping.

		Amounts Finer than Each Laboratory Sieve (Square Openings), Weight Percent							
Size Number	Nominal Size (Sieves with Square Openings)	1½ in. (37.5 mm)	1 in. (25.0 mm)	¾ in. (19.0 mm)	½ in. (12.5 mm)	⅜ in. (9.5 mm)	No. 4 (4.75 mm)	No. 8 (2.36 mm)	No. 16 (1.18 mm)
57	1 in to No. 4 (25.0 to 4.75 mm)	100	95 to 100	—	25 to 60	—	0 to 10	0 to 5	—
8	⅜ in to No. 8 (9.5 to 2.36 mm)	—	—	—	100	85 to 100	10 to 30	0 to 10	0 to 5

Application:

A. All KMM membrane applications should be performed by a contractor who has been trained by Koppers. Where a Koppers roofing guarantee is required, KMM membrane must be applied by a contractor specifically authorized by Koppers.

B. Prior to beginning installation of the KMM roofing system, substrates for roofing as well as waterproofing shall be inspected by the roofing contractor for dryness, smoothness, rigidity and freedom from debris. All projections and holes which might cause rupture of the membrane are to be repaired. Review "Conditions of Surface to Receive KMM Membrane", page 22.

C. All metal surfaces must receive a coating of KMM Adhesive before covering with KMM membrane.

D. Determine the direction of water drainage and the low point of the deck. The direction of both end laps and side laps shall be such that the direction of the water flow is over the laps. The direction of the overlap shall be changed as the direction of the water flow changes.

E. Each succeeding sheet of KMM membrane shall be interply-fused to previously positioned sheets in successive order.

F. End laps of KMM membrane shall be staggered.

G. Cushioning or stripping layers of Standard Grade KMM membrane shall be applied in areas of potentially high stress, sharp edges, terminal closures and/or changes in direction of KMM membrane. These areas include interior and exterior corners, bottoms of valleys and/or major changes in directions of slope, drains, joints, openings, metal flanges, projections, etc. Cushioning layers shall be applied prior to the main KMM membrane system installation and shall be embedded in KMM Adhesive, substrate-fused, and then top-sealed to form a smooth transition surface.

H. All inside corners shall be cushioned with double or triple layers of Standard KMM membrane to provide a firm cant and support for corner application of the main KMM membrane system.

I. In KMM roofing systems, fiber, wood or smooth mortar cants are permissible alternates to multiple-cushioning layers of KMM membrane. However, when non-KMM cants are used, a layer of KMM membrane applied over the cant is necessary before the application of the final flashing system In waterproofing systems, only KMM cushion layers are acceptable as cants.

J. The main KMM membrane shall extend a minimum of 2" above the cant Interply-fuse all side laps Substrate-fuse and top-seal the terminal end of the KMM membrane to the wall

K. All joints and openings in the substrate resulting from pipes, conduits, hatches, ductwork, steelwork, etc., penetrating the membrane layer are to be covered with Standard KMM membrane, sealed at the areas of intersection and protected with Aluminum KMM membrane.

L. Deck areas around drain openings that are protected by multiple layers of membrane and lead flashings must be tapered from the outermost perimeter of the final protective membrane to provide slope to the drain. All waterdams that hinder the free flow of water to the drain because of multiple thicknesses of KMM membrane shall be corrected.

M. Any KMM membrane which will not otherwise be covered by a topping shall be protected with a layer of Aluminum KMM membrane extending a minimum of 4" beyond the edges of the unprotected membrane and substrate-fused around its perimeter. Specific details of the installation must be agreed upon between the architect and Koppers prior to installation.

N. Aluminum and steel hatches should be insulated prior to installation.

O. At the end of each day's work, temporary waterstops must be installed to protect the insulation or substrate from water penetration.

Aluminum KMM Joint Connection

The overlapping joint is maintained on Aluminum KMM membrane by the heat fusion attachment of the upper sheet to the exposed 4" bitumen band on the lower sheet. During inter-ply fusion of this joint, a bitumen bead shall be forced from between the mated edges which is then covered by the aluminum extension tab on the upper aluminum sheet.

The use of a roller is recommended to properly press laps firmly together.

Application Temperature:

KMM membrane should be carefully unrolled at material temperatures below 40°F. At these temperatures, warm storage prior to use will improve handling and flexibility. Do not apply when material temperature is below 32°F or on frosty surfaces. Store KMM Adhesive at temperatures above 40°F.

Application of KMM Adhesive

KMM Adhesive can be applied by brush, roller or squeegee.

Do not thin KMM Adhesive prior to use. Mix thoroughly before applying.

KMM Adhesive in finishing systems is applied at a rate of 1 to 1½ gal. per square as a thin, full coating. In waterproofing systems the application rate is 2 to 3 gal. per square The adhesive must be applied one-half to the substrate and the other half to the underside of the KMM membrane When KMM Adhesive is used for attaching KMM Aluminum Membrane to insulation, decking or roof surfaces, the adhesive may be applied entirely to the surface.

When the membrane is to be totally adhered to a board-type insulation, additional adhesive may be required depending upon its porosity.

The KMM membrane must be set into place while the adhesive is still tacky. To insure good adhesion of the KMM membrane to the substrate and to force out any entrapped air, apply pressure to the membrane surface by hand rubbing, stiff broom and/or roller

Loose Aggregate Topping System Specification No. 610
Bituminous Aggregate Topping (BAT) System Specification No. 620

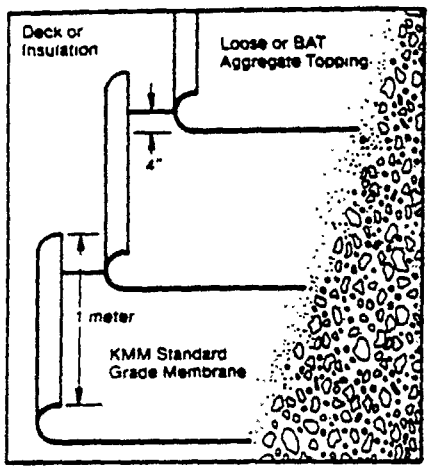

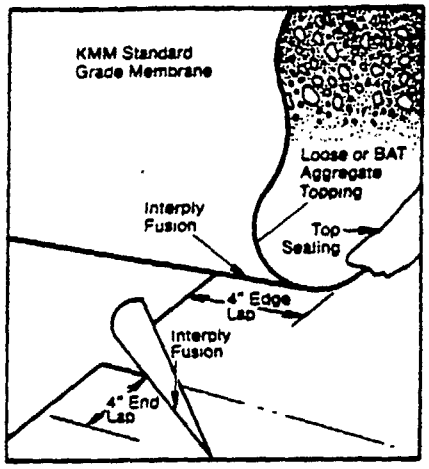

Materials

per 100 sq. ft. of roof

KMM Membrane (Standard)	1 ply
Surfacings	
Loose Aggregate	1,000 lbs. min.
BAT System	650 lbs. min.

Slope Requirements:

1" per foot maximum (loose aggregate topping). 1½" per foot maximum (BAT topping).

General Requirements on Pages 21 through 27 and Detail Specifications on Pages 30 through 31 are a part of this specification and must be adhered to where applicable.

1. Prior to starting the application of the roofing membrane, cushioning or stripping layers of Standard Grade KMM membrane shall be applied in areas of potentially high stress, sharp edges, terminal closures and/or changes in direction of KMM membrane. These areas include interior and exterior corners, bottoms of valleys and/or major changes in directions of slope, drains, joints, openings, metal flanges, projections, etc. Cushioning layers shall be embedded in KMM Adhesive, substrate-fused, and then top-sealed to form a smooth transition surface.

2. Determine the direction of water drainage and the low point of the deck. The direction of side laps shall be such that the direction of the water flow is over the laps. The direction of the overlap shall be changed as the direction of the water flow changes.

3. Beginning at the low point of the roof slope, install one ply of Standard Grade KMM membrane. The membrane shall be laid in a fashion which allows water to pass over the lap instead of against the lap.

4. All side and end laps shall be 4" and interply-fused and top-sealed.

5. Each sheet of KMM membrane shall be set in place and shall be stretched slightly to remove any wrinkles. To retain the membrane in the smoothed position, the ends may be tacked to the substrate by partial substrate fusion.

6. Substrate-fuse the KMM membrane to the substrate around the entire perimeter of the roof, at parapets, skylights, walls, etc., with all joints interply-fused and top-sealed.

7. Extend the KMM roofing membrane a minimum of 2" above all cants. Substrate-fuse and top-seal along the upper terminal edge.

8. The contractor shall thoroughly inspect completed KMM membrane at the end of each day's work as well as just before application of topping.

9. Install KMM Aluminum flashings in accordance with flashing specification described on Page 30.

10. When the flashings have been completed, install a loose aggregate or bituminous aggregate topping over the entire membrane. Refer to Page 26 for topping information.

Specification No. 630

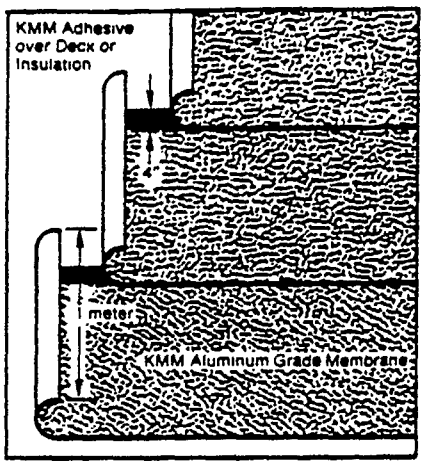

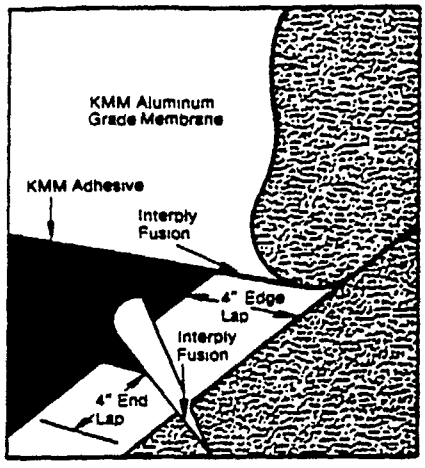

Materials

per 100 sq. ft. of roof

KMM Adhesive	1-1½ gal.*
KMM Membrane (Aluminum)	1 ply

Slope Requirements

No Limitations.

*Depending upon the porosity of the roof deck or insulation, additional KMM Adhesive may be required.

Procedure

General Requirements on Pages 21 through 27 and Detail Specifications on Pages 30 and 31 are a part of this specification and must be adhered to where applicable.

1. Prior to starting the application of the roofing membrane, cushioning or stripping layers of Standard Grade KMM membrane shall be applied in areas of potentially high stress, sharp edges, terminal closures and/or changes in direction of KMM membrane. These areas include interior and exterior corners, bottoms of valleys or major changes in directions of slope, drains, joints, openings, metal flanges, projections, etc. Cushioning layers shall be applied prior to the main KMM membrane system installation and shall be embedded in KMM Adhesive, substrate-fused, and then top-sealed to form a smooth transition surface.

Determine the direction of water drainage and the low point of the deck. The direction of side laps shall be such that the direction of the water flow is over the laps. The direction of the overlap shall be changed as the direction of the water flow changes.

The selvage edge of the Aluminum KMM membrane shall be positioned on the high side so that the direction of the flow of water is over the laps.

2. Starting at the low point of the deck, set the first sheet of Aluminum Grade KMM membrane into a full bed of KMM Adhesive (application rate of 1 to 1½ gal. per square) before the adhesive becomes dry to the touch. Rub or stiff broom thoroughly to obtain proper adhesion and to remove all entrapped air from under the membrane. End and side laps shall be 4".

3. Subsequent courses are to be laid with 4" end and side laps, from the first course progressing to the high point. Proceed until the entire membrane is completely adhered to the deck, and all joints interply-fused.

4. The main KMM membrane shall extend a minimum of 2" above the cant. Interply-fuse all side laps. Substrate-fuse and top-seal the terminal end of the KMM membrane to the wall.

5. The contractor shall thoroughly inspect the completed KMM membrane at the end of each day's work and when the job is finished.

6. Install KMM Aluminum Flashings in accordance with flashing specifications described on Page 30.

7. After completion of the Aluminum KMM roof and flashing system, a high quality varnish-base aluminum paint may be applied to any exposed streaks or seams of bitumen.

KMM Flashing Specifications

(General information)

Flashings are the terminal closures of a roofing system which perform a waterproofing, and in some systems, a decorative function. Flashings must be installed at all intersections formed by vertical surfaces. Their importance cannot be stressed too strongly. Water entering the roofing system through flashings can result in water vapor forces which can destroy the effectiveness of the roofing and insulation.

Koppers flashings are an integral part of a Koppers roof. Designed for flexibility, Aluminum KMM flashings will provide many years of service.

Flashing should be installed as roofing progresses to prevent possible water damage to insulation or deck under the roofing.

Note:

1. If bonded/guaranteed flashing is required, it must be installed in conjunction with a Koppers bonded/guaranteed roof and can be bonded/guaranteed for standard periods up to but not greater than the period for which the roofing is bonded/guaranteed. To be bonded/guaranteed, flashings must be set at least 8" above the roofing base.

2. Metal Cap flashings are not bondable and are not included under any flashing bond/guarantee.

3. Metal work of any description used as flashing or a part of a flashing system is not bondable and is not included under any flashing bond/guarantee.

4. Vertical flashing that terminates without use of metal counterflashing, must be stripped with 6" wide KMM Aluminum Membrane totally fused to the wall and the KMM Aluminum Membrane.

5. When parapet wall flashing exceeds 28" from roof surface, the length of flashing must not exceed 43" KMM Aluminum Membrane on such flashing must be set in KMM adhesive at the total rate of 1-1½ gal. per 100 square feet, applying ½ on the wall and ½ on the underside of the membrane. The membrane must be substrate-fused 4" around perimeter of each layer, except at selvage where fusion should be 4" inward of selvage, avoiding fusion under selvage.

Flashing specification No. 710 must be in place prior to proceeding with above-described application.

Preparation

1. All surfaces to receive the KMM Flashing Systems must be free of dirt, gravel or other loose material.

2. All surfaces must be reasonably smooth and dry.

Vertical Flashing

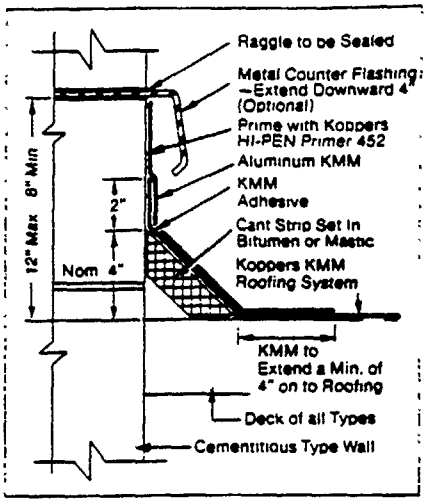

Horizontal Flashing

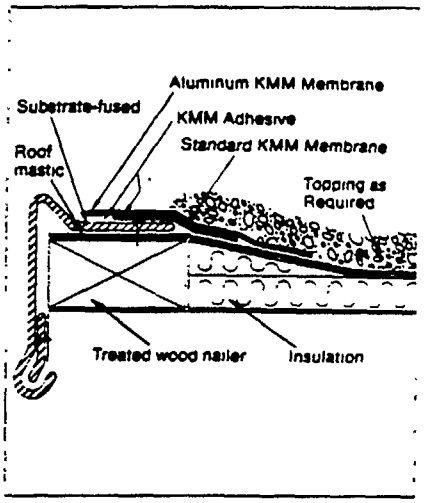

Specification No. 710

Flashing system application: (Vertical)

1. When flashing is to be installed over a porous cementatious surface, apply a prime coat of Hi-Pen Primer at a rate of ½ to ¾ gal. per 100 sq. ft. Allow to dry four hours minimum.

2. Each course of KMM Aluminum membrane shall be unrolled and cut to maximum length of 11' prior to setting in place.

3. Apply a coat of KMM Adhesive at a total rate of 1 to 1½ gal. per 100 sq. ft. to all areas of the completed roof membrane to be covered with KMM flashing, and on underside of flashing that will contact roof membrane.

4. While the adhesive is still tacky, set a layer of KMM Aluminum membrane into place extending from 4" onto the roofing membrane to above the top of the cant strip a minimum of 4". Adjacent pieces shall be side lapped a minimum of 4".

5. Rub, brush or roll thoroughly to obtain proper adhesion and to remove all entrapped air from under the flashing membrane.

6. Substrate-fuse flashing that extends above termination of roof membrane. Interply-fuse all laps and that which extends onto roof surface.

7. The contractor shall thoroughly inspect the completed flashing system at the end of each day's work.

8. A high quality varnish-base aluminum paint may be applied to any exposed streaks or seams of bitumen.

9. Install metal counterflashing as required.

10. Complete the top surfacing of the roofing membrane to the base of the cant strip as may be specified.

Flashing system application: (Horizontal)

1. All surfaces to be covered by the KMM Flashing must be coated with KMM Adhesive at a rate of 1 to 1½ gal. per 100 sq. ft. This includes all metal surfaces.

2. When the adhesive becomes tacky, strip metal flanges using 4" minimum widths of standard KMM membrane as a cushioning strip centered along the length of the entire edge of the flange. The cushioning must cover the edge of the metal where it meets the main membrane a minimum of 2" and must cover all nail heads. The balance of the width of the cushioning strip must extend a minimum of 2" onto the roofing membrane.

3. The perimeters of the KMM cushioning strip are then substrate-fused and top-sealed.

4. KMM Aluminum membrane is then installed in KMM Adhesive applied at a rate of 1 to 1½ gal. per 100 sq. ft. extending a minimum of 4" beyond the inside edge of the KMM cushioning strip and to the outer edge of the metal flange.

5. It is then fused around the perimeter.

6. Once this operation has been completed, the flashing system can be surfaced with aggregate as may be required.

Hanging Gutter

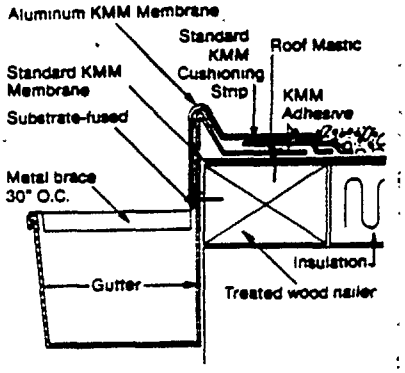

Gravel Stop

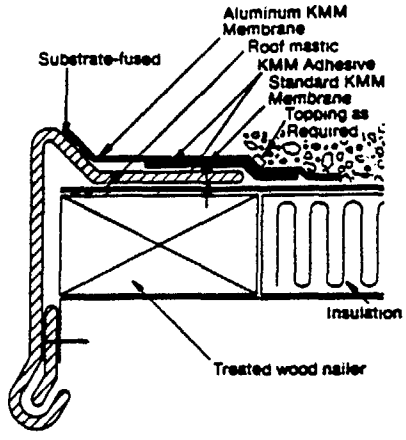

Tapered Cant

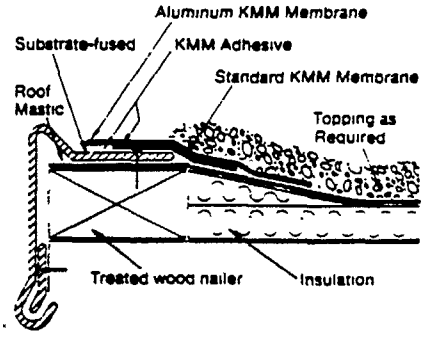

Hatch—Curb—Expansion Joint

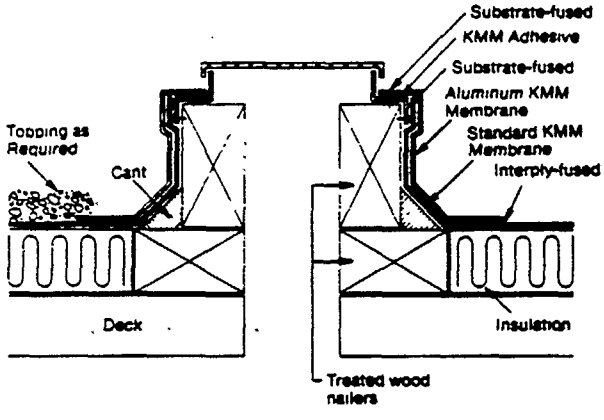

Roof Drain

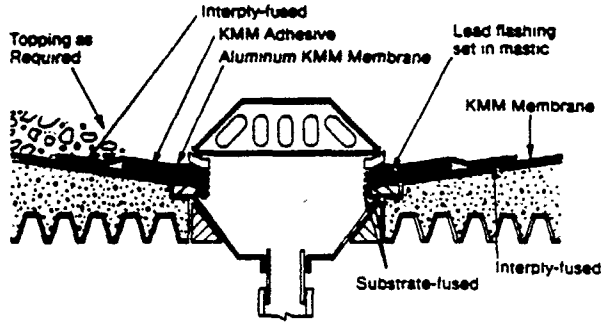

Parapet Wall Flashing with Aluminum KMM Wall Cap

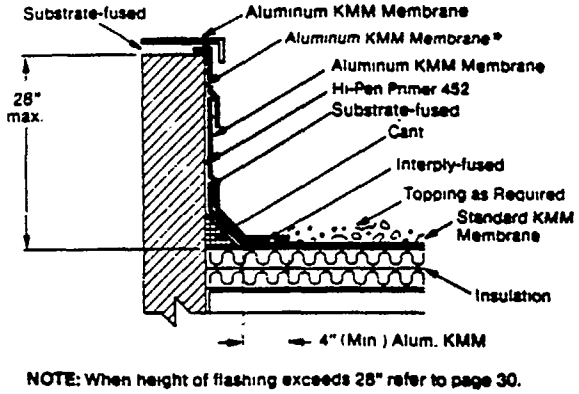

NOTE: When height of flashing exceeds 28" refer to page 30.
*Overlap 4" and substrate-fuse when flashing height exceeds 12"
Specification No. 710 must be in place prior to application of higher flashing.

Parapet Wall Flashing

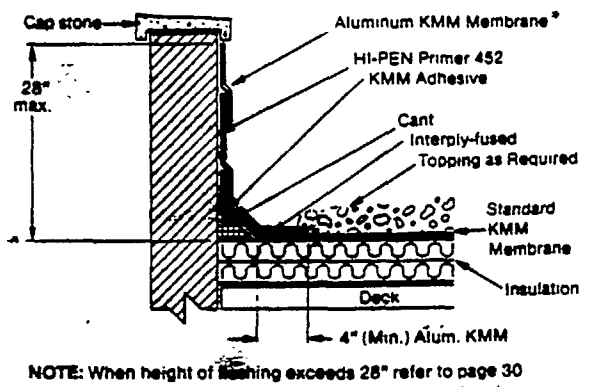

NOTE: When height of flashing exceeds 28" refer to page 30
*Overlap 4" and substrate-fuse when flashing height exceeds 12".
Specification No. 710 must be in place prior to application of higher flashing.

Koppers Waterproofing and Dampproofing Systems

FOR ENGINEERING ASSISTANCE . . .

Since the majority of projects present such a wide variety of conditions, the specifier must take precautions in the preparation of waterproofing specifications and related details to maximize the possibilities of a permanently watertight job.

Koppers has had many years experience in the waterproofing field and offers the specifier engineering assistance in achieving the best possible waterproofing job.

Coal tar membrane waterproofing systems

The function of waterproofing and dampproofing is to prevent the entry or passage of water through masonry or concrete structures. The most important property that must be possessed by any waterproofing or dampproofing material is its ability to resist prolonged contact with water.

Because of coal tar's natural resistance to moisture, bacteria and acid, it has proven to be the most effective hot applied waterproofing system available today.

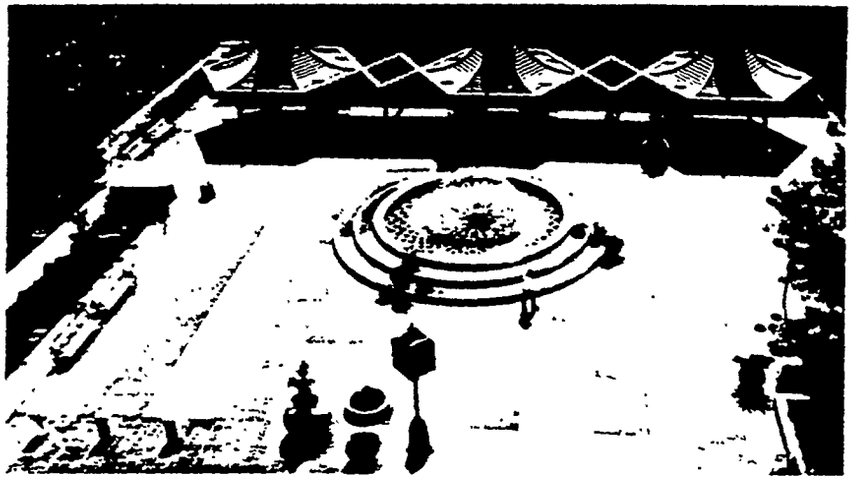

Membrane waterproofing systems

Koppers KMM Membrane is a cold applied, prefabricated waterproofing sheet designed for exceptional waterproofing protection. When a cold applied sheet membrane is desired, ease of application, dependability, and economy make KMM the system you can rely on for your most critical waterproofing requirements.

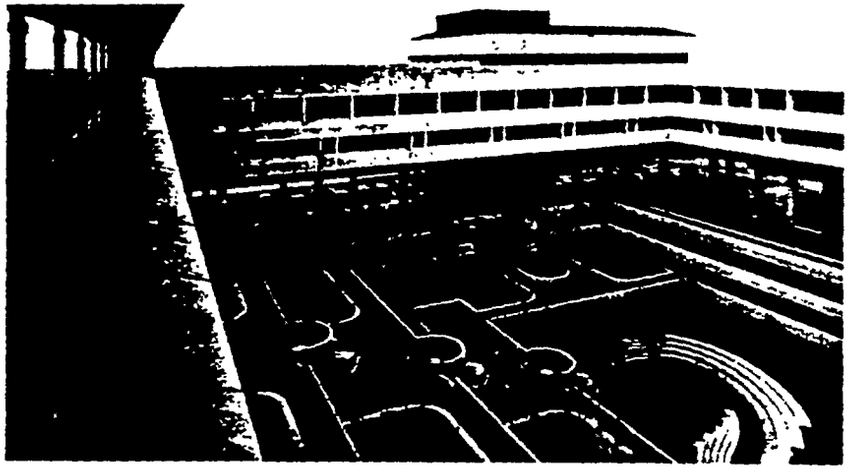

Cold applied mastic and liquid waterproofing and dampproofing systems

Many projects require the advantages of cold applied liquid or mastic moistureproofing materials. Koppers manufactures a wide variety of quality dampproofing compounds. Applied by themselves or in combination with reinforcing fabrics, Koppers dampproofing products will



Coal tar plaza deck and wall waterproofing systems

Membrane Waterproofing
Materials

a. Coal Tar Waterproofing Bitumen A.S.T.M. D-450 Type III.

b. Membrane (Select one or combination).
GLASFAB—A.S.T.M. D-1668.

Tar Saturated Cotton Fabric—A.S.T.M. D-173
Tarred felt —A.S.T.M. D-227.

c. Concrete Priming Oil—A.S.T.M. D-43-41.

General Requirements

a. Preparation of surfaces: Surfaces to be waterproofed shall be reasonably smooth and free from holes or projections which might cause puncture of the membrane. The surface shall be dry and thoroughly cleaned to remove dust and loose materials immediately before application of the waterproofing. Do not apply waterproofing where effects of freezing or moisture will adversely affect the waterproofing application.

b. Applicator: All membrane waterproofing shall be applied by an experienced roofing and waterproofing contractor.

Application Precautions

a. Waterproofing bitumen shall not be heated above 425°F.

b. Roll or press firmly all plies of membrane into the hot bitumen and apply without wrinkles, buckles or kinks.

c. On vertical walls apply hot bitumen with cotton roller mops or by other suitable application techniques.

d. Apply membranes on vertical surfaces in courses not exceeding ten feet in length where immediate and careful backfilling is not possible. After each course of the waterproofing system is completed and before the top mopping is applied; nail each course at the upper edge before the next course is applied. Nail each succeeding course endlapping not less than 10 inches.

e. Reinforce wall angles, corners or any place the waterproofing membrane course may be subject to unusual stresses with not less than 2 additional plies of fabric or GLASFAB reinforcement and moppings of bitumen.

f. Insulate and protect all hot water and steam pipes which project through or are near the surfaces to be waterproofed. Take the necessary precautions to prevent water from getting between the waterproofing and the waterproofed surface at all points where the membrane is penetrated by drains, pipes, etc. Apply extra plies of reinforcing membrane and bitumen moppings in these areas.

g. Carefully examine laps which have been exposed for any length of time, such as at the junction of a vertical wall and a slab, for defects and insufficient lap areas and repair as necessary before proceeding with further application.

h. Apply all membrane waterproofing systems in a workmanlike manner and use wood nailers treated with a water-borne preservative for all vertical wall waterproofing.

i. Protect the membrane from damage by other trades after installation to maintain the integrity of the waterproofing throughout the structure.

j. Ventilation should be provided in enclosed spaces during application.

Horizontal waterproofing applications:

(1) Beginning at the low point of the slab mop the surface with hot Koppers Waterproofing Bitumen and immediately apply the reinforcing membrane over the entire area. (2) Be sure that each ply is solidly mopped and bonded. (3) For the various waterproofing systems lap the reinforcing plies as follows: (a) Two Ply System—lap 19 inches. (b) Three Ply System—lap 24⅔ inches. (c) Four Ply System—lap 27½ inches. (d) Five Ply System—lap 29 inches. (4) Mop the entire top surface with Koppers Waterproofing Bitumen. The completed waterproofing forms a firmly bonded system and the reinforcement shall not be exposed at any place. (5) As soon as any portion of the waterproofing has been completed, cover it with the protection course specified, such as brick, tile, concrete, rigid insulation or other specified material.

Plaza deck waterproofing applications:

When membrane waterproofing is used in plaza construction with interior drains and the finish slab does not rest immediately on the waterproofing, but on concrete pedestals, in addition to the application precautions above the following additional precautions shall be taken: (1) If deck is sloped to interior drains, specify Waterproofing Bitumen conforming to ASTM Specification D-450 Type III. (2) Before the pouring or placing of pedestals supporting precast finish slabs, additional reinforcement shall be installed under each pedestal over existing membrane. (3) Extreme care should be taken to protect the finished waterproofing from damage by other trades during construction of towers, etc. Place a protective course over the finished membrane until the wearing surface is placed. (4) On precast concrete systems all joints should be grouted with flashing cement and stripped with a reinforcement fabric.

Below grade wall waterproofing application:

(1) Apply a uniform brush coat of Koppers Concrete Priming Oil over the entire surface to be waterproofed (approximately 1 gallon for each 100 square feet). (2) Mop wall completely with Koppers Waterproofing Bitumen. (3) Starting at the most practical place, install the desired number of plies lapping them as follows: (a) Four Ply—lap 27½ inches. (b) Three Ply—lap 24⅔ inches. (c) Two Ply—lap 19 inches. (d) When more than 4 plies are used in a membrane, it is recommended that they be installed in at least two operations, i.e., 2 plies over three, 3 plies over three, etc. maintaining the shingle fashion method in each operation. (4) Nail membrane with concrete nails 8 inches on centers through flat tin discs at the end lap horizontally across the membrane. If wood nailers are installed, nail membrane to nailer with 1½ inch roofing nails through flat tin discs 8 inches on centers. (5) Mop the entire surface with Koppers Waterproofing Bitumen. The completed waterproofing forms a firmly bonded system and the reinforcement shall not be exposed at any place (6) As soon as any portion of the waterproofing has been completed, cover it with a protection course and backfill.

Typical Subgrade Waterproofing Application

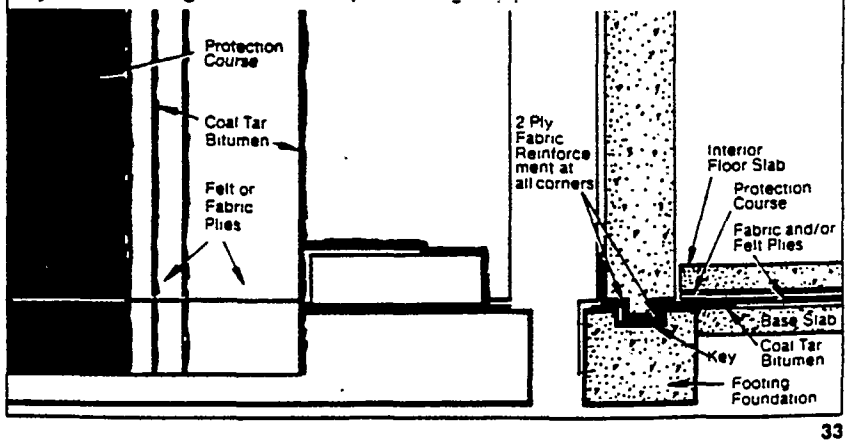

Materials and System Discussion

KMM waterproofing specifications are categorized as vertical and horizontal to differentiate between slight differences in application procedures dictated by the orientation of the surface to be waterproofed.

The vertical specification is written for foundation wall waterproofing, but may be modified for other vertical or steep surfaces to be waterproofed. The horizontal specification is written for split-slab or plaza deck applications but can also be modified for other low slope or flat surfaces. Consult your local Koppers sales representative for assistance with these modifications.

Vertical KMM Waterproofing System Specification No. 640

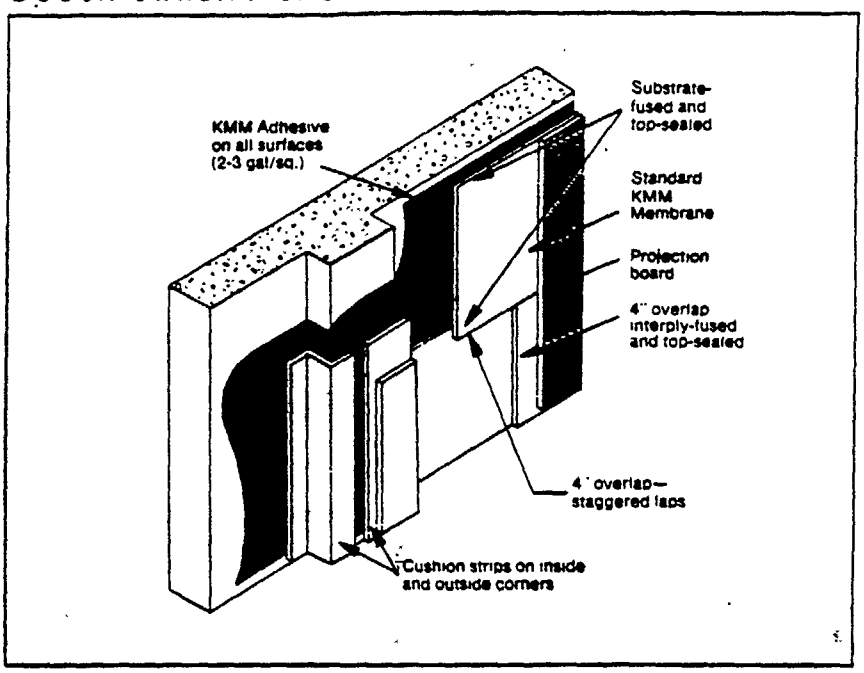

Description

Koppers Vertical Waterproofing Specification No. 640 consists of Standard Grade KMM membrane applied to a vertical surface in a full bed of KMM Adhesive. The KMM membrane forms a waterproof system through the use of joint heat fusion, a unique process whereby all contiguous joints are affixed together to develop a monolithic waterproof membrane. In addition, the entire system is completely adhered to the vertical surface to eliminate any voids which might permit collection of water between the surface and membrane.

This system is applicable for use with any vertical structural surface which provides continuous support for the KMM membrane.

The general requirements and application procedures found on Pages 21 through 27 are part of this specification and must be adhered to where applicable.

Procedures

1. Apply cushioning or stripping layers of Standard Grade KMM membrane prior to the installation of the KMM waterproofing membrane.

2. The adhesive application rate for all waterproofing is to be 2 to 3 gal. per square.

3. Starting at the low point, set the first sheet of Standard Grade KMM membrane into a full bed of KMM Adhesive while the adhesive is still tacky. Rub and/or brush thoroughly to remove all entrapped air from under the membrane. End and side laps shall be 4". All end and side laps shall be interply-fused and top-sealed.

4. Substrate-fuse the KMM membrane to the substrate around the entire perimeter, and at all projections, walls, etc., with all joints interply-fused and top-sealed.

5. Each sheet is to be set vertically, in a full bed of adhesive, from the first course to the high point of the area to be waterproofed. Each course shall end lap the lower course 4" and side laps shall be 4". The top ends of each sheet of KMM membrane shall be substrate-fused and top-sealed. Proceed with application of KMM membrane until the entire surface is completely adhered to the wall, interply-fused and top-sealed.

6. The contractor shall thoroughly inspect the completed KMM membrane at the end of each day's work as well as before the backfilling phase.

7. To eliminate potential abrasions, breaks and punctures, it is strongly recommended that the completed KMM waterproofing system be completely covered immediately, with a ⅛" minimum thickness protective board. It should then be permanently backfilled, tamping the backfill as required. Protective board can be installed in KMM Adhesive or other suitable asphalt base adhesives.

8. Any KMM waterproofing membrane left exposed after backfilling shall be protected with Aluminum Grade KMM membrane or other suitable sunlight-protective materials.

9. When any portion of the membrane is to be permanently exposed, it must be covered with Aluminum KMM Flashing, Specification #710 for protection.

Horizontal KMM Waterproofing System Specification No. 650

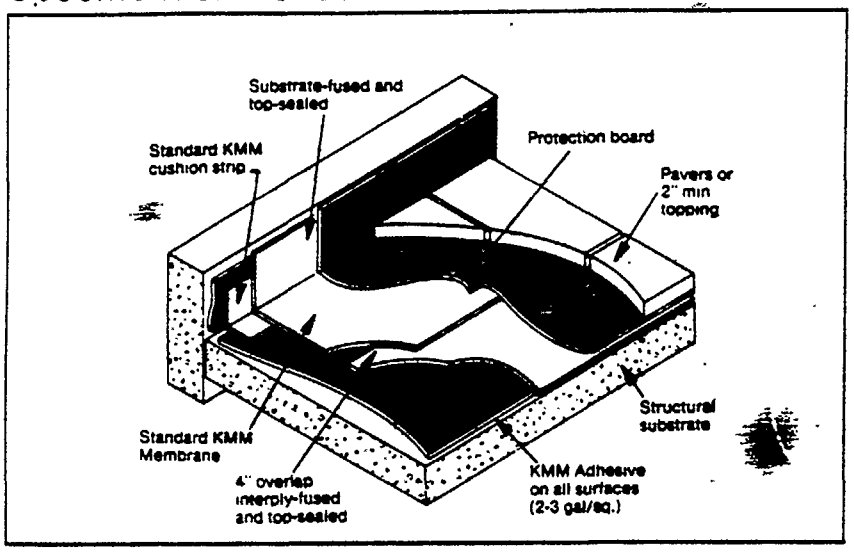

Description

Koppers Horizontal Waterproofing Specification No. 650 consists of Standard Grade KMM membrane applied to a plaza deck or horizontal surface in a full bed of KMM Adhesive. The KMM membrane forms a waterproof system through the use of joint heat fusion, a unique process whereby all contiguous joints are affixed together to develop a monolithic waterproof membrane.

This system is applicable over any structural deck and/or approved rigid board insulation where the substrate provides continuous support for the KMM membrane. It is ideally suited for application directly to poured structural concrete decks.

Slope

Applicable for deck slopes of 0" to 4" per foot. When slope exceeds 4" per foot see Specification No. 640 on Page 34.

General requirements

The general requirements and application procedures found on Pages 21 through 27 are part of this specification and must be adhered to where applicable.

Procedures

1. Apply cushioning or stripping layers of Standard Grade KMM membrane prior to the installation of the KMM waterproofing membrane.

2. The adhesive application rate for all waterproofing is to be 2 to 3 gal. per square.

3. Starting at the low point of the deck, set the first course of Standard Grade KMM membrane into a full bed of KMM Adhesive while the adhesive is still tacky. Rub and/or brush thoroughly to obtain proper adhesion and to remove all entrapped air from under the membrane. End and side laps shall be 4". All end and side laps shall be interply-fused and top-sealed.

4. Substrate-fuse the KMM membrane to the substrate around the entire perimeter, and at all projections, walls, etc., with all joints interply-fused and top-sealed.

5. Subsequent sheets are to be laid shingle fashion, with 4" end and side laps, from the first course progressing to the high point. Proceed until the entire membrane is completely adhered to the deck, interply-fused and top-sealed.

6. Extend the KMM waterproofing membrane, as flashing, up vertical surfaces to a height above the water level expected at the wearing slab The top of the KMM membrane shall be substrate-fused and top-sealed to the wall. All side laps shall be interply-fused and top-sealed. When vertical waterproofing is required to join the upturn, continue the upturn a minimum of 6" above the height of the wearing surface and substrate-fuse to the wall.

7. The contractor shall thoroughly inspect completed KMM membrane at the end of each day s work as well as before application of protective board.

8. Proceed with application of the remaining phase of the horizontal system. Care must be taken to eliminate any puncture or damage of the KMM waterproofing membrane system by other trades.

9. It is required that a suitable protective layer be placed over the entire membrane on both horizontal and vertical surfaces to provide puncture resistance during construction and during placement of the wearing surface as soon as possible.

10. When any portion of the membrane is to be permanently exposed, it must be covered with Aluminum KMM Flashing, Specification #710 for protection.

Liquid and Mastic Applied Waterproofing and Dampproofing Systems

Hydroshield Mastic 451

All-weather cold process mastic membrane system

Hydroshield Mastic 451 is a solvent based asphalt mastic which is unaffected by immersion in water either before or after curing. It will adhere tightly to damp or even wet surfaces. Hydroshield is not damaged by soil alkalinity, acidity or minerals. This unique mastic may be applied under an extreme range of weather and temperature conditions.

Hydroshield Mastic for Dampproofing. When applied to masonry or concrete construction, Hydroshield Mastic serves as an effective dampproofing barrier to prevent the entrance of moisture by capillarity. Usually only one coat is necessary for dampproofing. Hydroshield Mastic goes on cold and may be applied to a wet or dry surface.

Hydroshield Mastic for Waterproofing. When a permanent vapor barrier to prevent the entrance of water under a head of pressure is required, Hydroshield Mastic, combined with Koppers Heavy Duty Glass Fiber Mesh, produces a tough, durable waterproofing membrane that cannot rot or deteriorate at sub-grade levels. For details of waterproofing applications, consult your Koppers representative.

Application Guide

	452 Primer Per 100 ft.² (When Needed)	Hydroshield First Coat Per 100 ft.²	Koppers Heavy Duty Glass	Hydroshield Top Coat Per 100 ft.²
Dampproofing	¼ to ½ gal.	2 gal.	None	None
Waterproofing	¼ to ½ gal.	5 gal.	1 or more plies	3 gal.

Liquid Asphalt 480

A cold-applied asphalt emulsion dampproofing.

Liquid Asphalt 480 is a filled, cold-applied, high-quality asphalt emulsion containing Bentonite clay.

When applied to masonry or concrete construction, Liquid Asphalt 480 serves as an effective dampproofing barrier to help prevent the entrance of moisture by capillarity. Usually two coats are necessary for dampproofing. Liquid Asphalt 480 goes on cold and may be applied to a wet or dry surface. For detailed specifications consult your Koppers representative.

Application Guide

	452 Primer Per 100 ft.²	Liquid Asphalt 480 Per 100 ft.² (2 coats)
Dampproofing	¼ to ½ gal.	3 gal.

EXELTHERM® Insulations
• Urethane Roof Insulation
• Composite Roof Insulation

KOPPERS Architectural and Construction Materials | 7 1/KOP

Koppers meeting todays insulation demands

Meeting the demands required to conserve our energy resources makes the need for high efficiency, dependable roof insulation mandatory.

Koppers Company, Inc. offers Exeltherm URETHANE Insulation and Exeltherm COMPOSITE Insulation to meet today's energy conservation requirements.

It makes good sense to invest in a dependable Exeltherm roof insulation that can provide increased returns corresponding with the continued energy price escalation.

COMPARATIVE WEIGHT
in relation to "C" value. Weight in lbs. per 100 sq. ft. for equivalent .15 "C" Value.

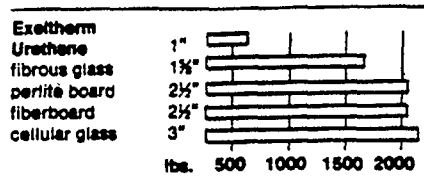

*Data generated from Exeltherm Urethane with felt skins.

COMPARATIVE PERFORMANCE
BTU/hr./sq. ft./f/in.

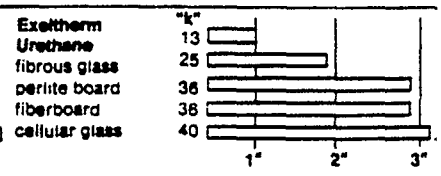

thickness required for equivalent "k"

TYPICAL PHYSICAL PROPERTY DATA

Property	Test Method	Value
Thermal Conductivity "k" (Foam Core) BTU/Hr/ft²/F/in	ASTM C 177	13
Compressive Strength, psi	ASTM D 1621	25
Water Vapor Permeability Perms—Inches	ASTM D 355-62T	<1 0
Service Temperature, F	—	—100 to 250
Dimensional Stability, % (Linear variation, 24 hrs.)	158 F/100% RH	<1 0

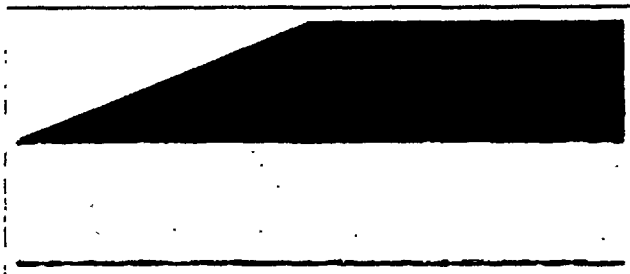

• Urethane Roof Insulation

Exeltherm® Urethane insulation board combines a core of rigid, closed-cell urethane foam with integrally bonded, asphalt-saturated felt skins. A low "k" factor combined with high moisture resistance and moisture vapor resistance derived from the asphalt-saturated skins provide high insulating efficiency and long life. It is approved by Factory Mutual for use above non-combustible roof decks and as a Class II material on metal decks.

Sizes Available: 36" x 48", 48" x 96"

THERMAL CONDUCTANCE AND HANDLING DATA

"C" Value	"R" Value	Thickness* (Nominal)	Pieces/ Bundle	Square Ft. Per Bundle	Approx. Lbs. Per Bundle	Flute Spanability
0 19	5.26	8"	8	96	39	2⅝"
0.15	6.67	1"	8	96	51	2⅝"
0.12	8.33	1 2"**	6	72	44	3"
0 10	10 00	1 4"**	6	72	48	3⅜"
0.09	11 11	1.5"	6	72	48	3⅜"
0.08	12.50	1 75"	5	60	42	3⅜"
0.07	14 30	2"	4	48	36	3⅜"
0.06	16.66	2.25"	4	48	40	3⅜"
0.05	20 00	2.5"	3	36	28	3⅜"
0.04	25.00	3"	3	36	33	3⅜"

*Includes both membranes.

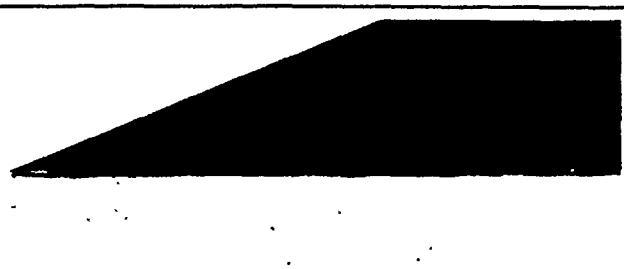

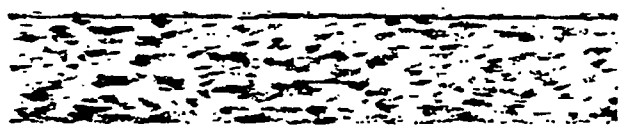

• Composite Roof Insulation

Exeltherm® Composite insulation combines two time-proven building products, urethane roof insulation and perlite board. This unique combination provides a commercially acceptable urethane insulation with both Factory Mutual approval for Class I construction and Underwriter's Laboratories approval for use in Construction I and Construction II.

Sizes Available: 36" x 48", 36" x 42".

THERMAL CONDUCTANCE AND HANDLING DATA

"C" Value	"R" Value	Thickness (Nominal)	Pieces/ Bundle	Square Ft. Per Bundle	Approx. Lbs. Per Bundle	Flute Spanability
0.15	6.67	1.5"	6	72	70	2⅝"
0.13	7.69	1.6"	6	72	70	2⅝"
0 10	10.00	1.75"	5	60	65	2⅝"
0.08	12.50	2.0"	4	48	56	3⅛"
0.07	14.30	2.5"	3	36	44	3⅛"
0.06	16.66	2.75"	3	36	46	3⅛"
0.05	20.00	3.0"	3	36	48	3⅜"

Note: Under normal use, Exeltherm insulations will retain an average of 80% of their thermal resistance R-factor values.

Suggested specifications and general conditions

Vapor Retarder

Moisture vapor tends to migrate from warm to cooler areas. In building construction, vapor retarders are used to retard or block the passage of moisture into walls or roofing assemblies.

To determine whether a vapor retarder is necessary, computations based on occupancy and relative humidity inside the building and the outdoor temperatures during the various seasons must be considered. If the potential dew point occurs in or above the insulation, a vapor retarder is required.

Since the specifier is aware of the actual conditions of the specific installation, the specifier has the responsibility to determine whether a vapor retarder is required.

Protection of Material

Exeltherm Roof Insulation must be protected from the weather at all times. No more insulation should be laid than can be completely covered with roofing materials on the same day. At the end of each day's work or in the event work is stopped abruptly, temporary water cut-offs should be installed at the edges of all drains and in the field of the roof. Such cut-offs shall be removed when work is again started.

"Rigid foamed polyurethanes are organic materials, which decompose at 450°F., and will ignite and burn at 600°-700°F., or when exposed to open flame. These products should not be installed in exposed applications."

Testing laboratory approvals

Compliances

- Factory Mutual
- Underwriters Laboratories

Koppers Company, Inc. has submitted its products to the rigorous requirements of both Factory Mutual Insurance and Underwriters Laboratories and can report that Exeltherm II and Exeltherm Composite Roof Insulation are acceptable Class I components for metal deck construction. Exeltherm Composite is also acceptable for U.L. Constructions 1 and 2.

Exeltherm Urethane Roof Insulation is an acceptable component for non-combustible decks and for Class II decks.

Exeltherm Urethane Roof Insulation when field applied over 1" perlite roof insulation, in a double layer application, will also meet the requirements of Factory Mutual Class I Construction over metal decks.

Cold Weather Precautions

Roofing installation at temperatures below 45°F requires special precautions to insure satisfactory performance of the finished roof. Remove all traces of ice and snow from the deck before applying roof insulation. Any moisture present at the time the roof insulation is applied may result in poor adhesion of materials to the deck and blistering of the membrane. Moppings tend to congeal rapidly in cold weather, even when the deck is dry, so extra care must be taken to set insulation as quickly as possible while the asphalt is still hot. Do not overheat the bitumen to offset this rapid chilling, but keep the insulation close behind the mopping of hot bitumen.

Slopes

On decks with slopes over 1" per foot, wood nailers should be used. Nailers should be the same thickness as the insulations and treated with a preservative compatible with the roofing system. They should be securely fastened to the deck at right angles to the run of the felt. The maximum spacing of the nailers should be 48" O.C.

Wood insulation stops shall be nominal 6" wide by the thickness of the insulation and treated with a preservative compatible with the roofing system. Insulation stops shall be securely fastened to the deck at the edges and eaves (not parapets or equipment curbs).

Bitumen

Exeltherm Roof Insulation manufactured with asphalt felt or asphalt saturated asbestos skins, integrally bonded, is compatible with all types of B.U.R. bitumen, and can be laid directly in hot bitumen.

Recommended bitumen application temperatures: Steep Asphalt, Type III 400°-450°F, Coal Tar Bitumen 350°-400°F.

In approving any deck as satisfactory to receive Exeltherm Roof Insulation, only the deck surface is accepted. It is the responsibility of the building designer and the deck manufacturer to provide for:

A. expansion and contraction in a manner that will provide a stable base for the roof insulation.

B. support of maximum anticipated loads.

C. securing attachments vertically and laterally.

D. the selection of the deck material and construction details including their ability to contain bitumens.

Koppers will not assume responsibility for deck defects or bitumen seepage. The placing of conduits, bolt heads, etc., above the roof deck and below the roofing membrane is not recommended. All projections or openings in the deck should be completed prior to the application of the roofing. Optimum adhesion to the deck is necessary for good roof performance.

Adhesives

Although cold adhesive attachment of Exeltherm Insulation can be used, extra care must be taken in the choice of adhesive and application conditions. Hot applied asphalt is the preferred adhesive.

Short form specification for standard built-up roofing systems

Roof insulation shall be Exeltherm Urethane, Exeltherm Composite, or Exeltherm Isocyanurate foam panels (choose one), factory laminated to form an integral bond with the surfacing skins, as supplied by Koppers Company, Inc. Pittsburgh, Pa. Foam density to be in excess of two pounds per cubic foot. "C" factor shall be: _____

Installation thickness(es) shall be as indicated on drawings. Lay insulation panels at right angles to the desired direction of roofing and in parallel courses with cross joints broken. Butt edges without forcing. Standard roofing practices for adhering rigid board insulation to the deck shall be used.

The foam used in Exeltherm Insulation complies with the following specifications:

Fed. Spec. HH-I-530A.

U.S. Dept. of Commerce, Maritime Admin. Spec. No. 32 MA-4B, Dept. of Navy NAV Fac. Spec. 49 YB, N.Y.C. Bd. of Std. & Appeals Cal. No. 91566 SH.

Koppers Company, Inc., supplies rigid urethane and isocyanurate insulation materials. It does not practice architecture nor engineering. Roofing incorporating Koppers insulation products, we believe, results in satisfactory installations when properly applied.

Characteristics, properties, or performances of materials or application specifications herein described are based on data obtained under controlled test conditions. Koppers makes no warranties, expressed or implied, as to the characteristics, properties, or performance of its products under any variations from such conditions in actual construction. Koppers assumes no responsibility for the effects of structural movement and makes no implied warranties whatsoever.

No agent, salesman, representative nor employee is empowered to change, alter or amend this provision unless it is done in writing by a duly authorized officer or employee of Koppers Company, Inc.

Exeltherm Insulation Application

1. Over Steel Decks—Metal deck suitable for the installation of Exeltherm II and Exeltherm Composite Insulations shall be clean, dry and properly graded to all outlets. Only the surface of the metal deck shall be accepted by the roofing contractor to receive insulation. Apply the Exeltherm Composite Insulation felt side up. Apply Exeltherm II and Exeltherm Composite with edges parallel to the flutes and bearing on the surface of the metal deck. Secure the insulation to the metal deck with hot steep asphalt at the rate of 12-15 lbs/square or secure with five nails per 2' x 4' board or six nails per 3' x 4' board with mechanical fasteners of a type approved by FM. A preservative-treated wood strip compatible with the roofing system and of the same thickness as the insulation shall be secured to the roof deck adjoining all eaves to act as a stop for the insulation.

Steel decks with vapor retarder—When Factory Mutual Class I-90 construction is required, install roof insulation over an FM Approved Vapor Retarder System and mechanically fasten around exterior perimeter according to Factory Mutual Loss Prevention Data Sheet I-28.

2. Over Non-Nailable Decks—Non-nailable decks suitable for the installation of Exeltherm Insulations shall be provided clean and dry and properly graded to all outlets. Prime the surface of concrete decks with Koppers Hi Pen Primer approximately ½ gal/square. On precast units hold priming back 4 inches from all joints. Over all roof areas embed Exeltherm Insulation in hot steep asphalt approximately 20 lbs/square, keeping asphalt 4 inches from all joints.

With vapor retarder—On primed concrete decks set vapor retarder in solid mopping of hot steep asphalt, brooming each ply to assure complete embedment according to manufacturers' specifications. On non-nailable sloping roof decks, in addition to the embedment of roof insulation in full mopping of hot steep asphalt, nailer strips (insulation stops) must be provided to prevent roof insulation from sliding.

3. Over Nailable Decks—(Wood, plywood, structural cement fiber, poured gypsum, and acceptable lightweight concrete).

Over vapor retarder—Embed Exeltherm Insulation in full mopping of hot steep asphalt. Lap in parallel courses. Stagger end joints in adjoining courses. Vapor retarder shall be capable of receiving hot steep asphalt.

Without vapor retarder—Over all roof areas install Exeltherm Insulation. Lay in parallel courses. Stagger end joints in adjoining courses. Secure each insulation panel with five nails per 2' x 4' board and six nails per 3' x 4' board of sufficient length to penetrate structural deck at least ¾ inches but not to protrude through underside of structural deck. Set nail heads slightly below surface of roof insulation. When two layers of roof insulation are applied, apply first layer with fasteners penetrating the structural deck at least ¾ inches, then apply the second layer in a solid mopping of hot steep asphalt. Stagger joints in each layer with those of the layer below.

Note 1: If application is over wood decks, cover the deck with one layer of rosin sheathing paper lapping each layer not less than 1" and nail sufficiently to hold in place.

Note 2: Since the specifier is aware of the actual condition of the specific installation, the specifier has the responsibility to determine whether a vapor retarder is required. The application of the vapor retarder shall be in accordance with the recommendations of the manufacturer of the type specified.

Metal Roof Deck Application

For FM approved Class I roof system as illustrated, install Exeltherm Composite, according to Factory Mutual Approved Guide for Class I, Insulated Steel Deck (See Also FM Bulletin 1-28.).

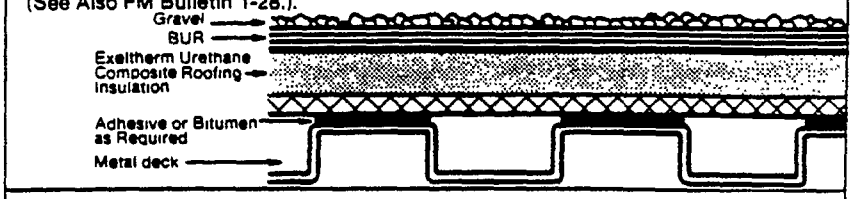

Concrete Roof and Plaza Deck Applications
Exeltherm Insulation Urethane Application

Exeltherm Urethane Roof Insulation without Vapor Retarder shown.* When sprinklered at 130 square feet coverage per sprinkler, the roof may receive some insurance advantages as Class I, where according to FM guidelines, "values are not excessive". (See Also F.M. Bulletin 1-28.)

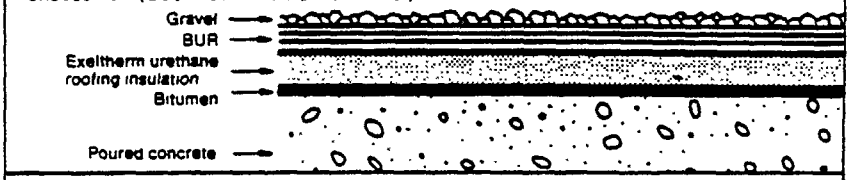

Exeltherm High-Density Insulation Plaza Application

Exeltherm Plaza Insulation, a high density material (nominal 75 psi compressive strength), is recommended with hot applied waterproofing.



Wood Deck Application

Impregnated fire-retardant treated lumber or plywood is of low combustibility (when treated according to FM guidelines) and acceptable for roof deck construction without automatic sprinkler protection.



Gypsum—Lightweight Insulating Roof Deck Application

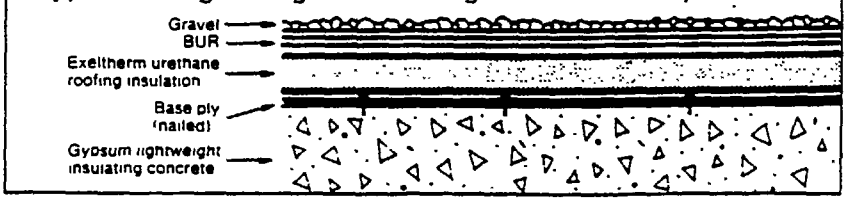

EXELTHERM® II Roof Insulation

Exeltherm® II is a non-composite factory laminated isocyanurate roof insulation board reinforced with glass fibers and faced with asphalt saturated asbestos. This unique combination results in excellent product strength and dimensional stability.

Compliances
Exeltherm II is approved as a component of Factory Mutual Class I Insulated Steel Deck Roofs and Factory Mutual I-90 wind resistance classification when applied in accordance with FM Loss Prevention Sheet 1-28.

Sizes
Exeltherm II Roof Insulation is available in thicknesses ranging from 1.2" to 3.0". Sizes are 36" x 48", and 48" x 96". (See table for specific information).

Precautions:
Exeltherm II Roof Insulation shall be protected from the weather and standing water at all times. No more insulation shall be laid than can be completely covered with roofing materials the same day. At the end of each day's work or in the event work is stopped abruptly, temporary water cut-offs shall be installed at the edges of all drains and in the field of the roof. Such cut-offs shall be removed when work is again started.

Warning:
This product will decompose and/or burn if exposed to sufficient heat or an ignition source of sufficient intensity. It should not be used in exposed or inadequately protected applications. It should be installed according to Koppers specifications.

The facers of this product contain asphalt saturated asbestos fiber. The Occupational Safety and Health Administration (OSHA), an agency of the United States government, believes that repeated inhalation of asbestos fiber is a health hazard and may cause various diseases including asbestosis and cancer

THERMAL CONDUCTANCE, SIZES, AND HANDLING DATA

"C" Value	"R" Value	Nominal Thickness	Pieces Bundle	Sq. Ft. Bundle	Weight Per Bundle	Flute Spanability
12	8.33	1.2	6	72	38	3.50
.10	10.00	1.4	6	72	41	4.25
.09	11.11	1.6	6	72	43	4.25
.08	12.50	1.8	5	60	39	4.25
.07	14.30	2.0	4	48	33	4.25
.06	16.66	2.25	4	48	35	4.25
.05	20.00	2.5	3	36	28	4.25
.04	25.00	3.0	3	36	31	4.25

Note: Under normal use, Exeltherm II Roof Insulation will retain an average 80% of its thermal resistance (R-factor) value.

COMPARATIVE INSULATION THICKNESS CHART
DIMENSIONS IN INCHES

"C" Value	"R" Value	Exeltherm II	Urethane Perlite Composite	Fibrous Glass	Perlite
12	8.33	1.2	1.65	2.06	3.0
.10	10.00	1.4	1.75	2.44	3.6
.09	11.11	1.6	1.85	2.9	4.0
.08	12.50	1.8	2.0	3.25	4.5
.07	14.30	2.0	2.5	3.72	5.15
.06	16.66	2.25	2.75	4.33	6.0
.05	20.00	2.5	3.0	5.2	7.2
.04	25.00	3.0	—	6.5	9.0

TYPICAL PHYSICAL PROPERTY DATA

Property	Test Method	Value
Thermal Conductivity "k" (Foam Core) BTU/hr/ft²/F/in	ASTM C 177	.13
Compressive Strength, psi	ASTM D 1621	40
Water Absorption Increase in Volume (2 hr immersion) %	ASTM C 209	<1.0
Water Vapor Permeability Perms—Inches	ASTM C 355-62T	<1.0
Service Temperature, F	—	−100 to 250
Dimensional Stability, % (Linear variation, 24 hrs.)	158 F/100% RH	<1.0

Exeltherm II Metal Roof Deck Application

For FM approved Class I roof system as illustrated, install Exeltherm II according to Factory Mutual Approved Guide For Class I, Insulated Steel Deck. (See Also F.M. Bulletin 1-28.).

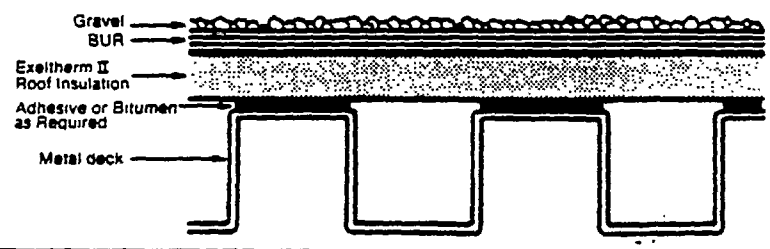

Reinforcement Fabrics are necessary for waterproofing and roofing systems because the waterproofing agents (bitumens) have practically no strength by themselves. Koppers Reinforcement Fabrics provide this extra strength in a manner similar to that of reinforcing rods in concrete. Sometimes called membranes, these fabrics serve as mechanical reinforcement for hot or cold applied bituminous coatings in roofing and waterproofing systems. They also provide the framework to build up coating thicknesses, achieving longer lasting waterproofing systems. Once applied, they form stress-resistant pliable sheets that withstand stresses and strains from wind, vibration, and expansion or contraction due to temperature changes.

Applications Of Koppers Reinforcement Fabrics are many, the largest being with hot or cold applied bituminous coatings in roofing and waterproofing.

Other applications include bridge deck waterproofing and flashings, foundations, slabs, tunnels, subways, pipeline wrapping, pipeline joint wrap, parapet wall treatment, asphalt paving repair and protection, driveways, parking areas and tennis courts.

Many of the reinforcement fabric systems installed over 25 years ago are still in use today In large construction projects such as highway bridges, their applications have insured complete protection against moisture penetration that ultimately leads to corrosion and the weakening of the structure.

Roof Repairs are long lasting when Koppers Reinforcement Fabric is used. Quick repairs to roofing and flashing membranes are possible if a ply of fabric is embedded in the first application of roof coating. A second application then completely seals the area where blisters and cracks once appeared.

Roof Resurfacing with reinforcement fabric adds strength to existing built-up roofs. Since it is important to select the membrane that performs best with a particular coating, Koppers manufactures fabrics that can be utilized with cold-applied products or hot bitumen Coated glass fabrics are available as well as glass mats and saturated cotton fabrics Glass membrane s non-rotting feature, its ability to conform to irregular surfaces, and its high tensile strength makes it a highly desirable reinforcement Cotton fabric is often used for stripping-in and covering corrugated metal roofs.

When selecting the proper roof resurfacing reinforcement, it is important to also use the proper amount of coating to assure a long service life

Other Uses for Koppers Reinforcement Fabrics exist wherever waterproofing systems are required Tennis courts can better maintain their tight, smooth playing surfaces with applications of Glasfab[2] membranes coated with bituminous or synthetic sealers. This waterproofing combination eliminates the recurrence of cracks, thereby preventing water from seeping under the asphalt and gradually breaking up the base.

Tunnels are effectively protected against water seepage into and through the concrete shell with Koppers Reinforcement Fabric embedded in a bituminous compound. A properly installed tunnel waterproofing system prevents rapid deterioration of reinforcing rods, heaving of concrete and the formation of icicles on the underside.

Pipeline protection has been achieved through an application consisting of a bituminous coating (Koppers Tar Enamel) and a reinforcement fabric (Glasfab membranes) to successfully prevent corrosion and soil stress.

Plaza Deck Waterproofing provides subterranean structures with needed protection against moisture. Any subterranean construction, whether used for office space, classrooms, storage or a parking garage, must be watertight; including walls and top surfaces. Landscaped plazas are often constructed on these top surfaces. It is here that Glasfab[2] is used as the reinforcing membrane in the waterproofing systems placed under the plaza surface.

Glasfab is available with a coating of asphalt or tar, to be compatible with the specified bitumen. Possessing the highest tensile strength of any reinforcing membrane currently in use, Glasfab provides a strong waterproofing system. It strengthens and secures the waterproofing agent between slabs and on walls under the plaza deck, sealing and protecting them from water and chemical penetration.

When a reinforcing membrane is required that is not coated with asphalt or tar, Koppers fills the need with Glascoat[4]. Like Glasfab, Glascoat is a woven glass fabric, but is coated with white resin. Glass mats and cotton fabrics may be needed in specific cases. Koppers makes these products available as waterproofing membranes, also.

Bridge Deck Waterproofing effectively protects bridge surfaces and substrates from premature deterioration Koppers Reinforcement Fabric, used in conjunction with coal-tar coatings, repels the adverse effects of weather, salt, gasoline and oil spillage. In addition, the waterproofing prevents spalling of concrete and the corrosion of bridge reinforcing rods (caused by penetration of moisture and de-icing chemicals). The woven glass reinforcement fabric serves a function similar to that of steel mesh in concrete. Forming a stress resistant pliable sheet, the supporting membrane adds strength and serviceability to the inherent water resistance of the coal-tar emulsion.

Foundation Waterproofing And Dampproofing at the time of construction can eliminate the problems of damage-causing leaks. Architects and engineers have long realized the advantages of waterproofing compounds in preventing or retarding the passage of water. The reinforcement fabric enables waterproofing compounds to remain stationary while being built-up to the specific quantities desired, thus allowing the specifier to achieve the build-up necessary to resist existing hydrostatic pressure.



Koppers Asphalt Or Coal Tar Saturated Cotton Fabrics are available in both standard and specification grade. The primary difference between the two grades is weight. Cotton Fabric has the longest successful application record. Specification grade cotton complies with specifications from the federal government, the American Society for Testing Materials (ASTM), the American Railroad and Engineering Association (AREA) and the American Association of State Highway Officials (AASHO).

Product	Applicable Specifications	Nominal Sq. Yd. Dry Weight	Sq. Yd. Saturated Wt.	Breaking Strength of Saturated Fabric	Nominal Thread Count	Coating	Color
Specification Cotton Fabric	Fed. Spec. SS-C-450A ASTM D-173-74 AREA and AASHO for various states.	3.5 oz.	10 oz. minimum	50 Warp 50 Fill Minimum	26 to 32 Warp 24 to 32 Fill	Asphalt or Tar	Black
Standard Cotton Fabric	None	2.0 oz.	6.5 oz. Typical Analysis	40 Warp 20 Fill Typical Analysis	27 Warp 15 Fill Typical Analysis	Asphalt or Tar	Black

Koppers Glasfab® And Glascoat® Woven Glass Fabrics are both well-known and widely accepted in the construction industry. Glasfab, an asphalt or tar coated fabric and Glascoat, a white resin-coated fabric are inorganic woven glass membranes which will not rot, are lightweight and conform to irregular surfaces. The tensile strength of glass fabric is greater than cotton fabric or jute.

Product	Applicable Specifications	Nominal Sq. Yd. Dry Weight	Sq. Yd. Saturated Wt.	Breaking Strength of Saturated Fabric	Nominal Thread Count	Coating	Color
Glasfab®	Fed. Spec. HH-C-466b ASTM D-1668-73 Type I & II	1.2 oz. to 2.0 oz. 1.4 oz. min.	1.5 oz. to 2.6 oz. 2 oz. to 3 oz.	75 Warp 75 Fill Minimum	20 X 10 or 20 X 20	Asphalt or Tar	Black
Glascoat®	White	1.2 oz. to 2.0 oz.	1.5 oz. to 2.6 oz.	65 Warp 64 Fill Minimum	20 X 10 or 20 X 20	Resin	White

Koppers Jute (Burlap) Fabric is asphalt saturated. Commonly known as treated burlap, it is a coarse fabric which tends to hold more bituminous roof coating material, resulting in a heavier build-up of coating in fewer applications. It is quite often specified for roofing and waterproofing. Jute is also used for protection of newly seeded areas, embankment erosion control and ditch liners for holding planted materials in place until growth starts.

Product	Applicable Specifications	Nominal Sq. Yd. Dry Weight	Sq. Yd. Saturated Wt.	Breaking Strength of Saturated Fabric	Nominal Thread Count	Coating	Color
Jute	Fed. Spec. HH-B-00800 ASTM D-1327-59	7.5 oz.	9.75 minimum Typical Analysis	50 Warp 50 Fill Typical Analysis	9 Warp 9 Fill Typical Analysis	Asphalt	Black

Koppers Glass Mats are widely used with cold-applied roofing products. They are non-shrinking, possess excellent embedment qualities and conform to irregular surfaces.

The U. F Glass Mat is white, lightweight, comprised of fine glass filaments in a random swirl arrangement, reinforced with glass strands at the edges and bonded with urea formaldehyde. An asphalt coated U. F Mat is also available.

Standard Glass Fiber Mesh consists of chopped mono-filaments formed into a random pattern and bonded with a resinous binder.

Heavy Duty Glass Fiber Mesh is constructed of heavy glass yarn, chopped in two inch lengths and formed into a jackstraw pattern It is bonded and coated with a pliable asphalt. The open pattern permits excellent bleed-through of the asphalt into which it is embedded.

Product	Binder	Glass Weight 100 sq. ft.	Total Weight 100 sq. ft.	Tensile Strength Width	Tensile Strength Length
U. F. Mat—White	Urea Formaldehyde	.9 lbs.	1 0 lbs.	4 lbs.	13 lbs
U. F. Mat—Asphalt	Urea Formaldehyde	.9 lbs.	3.5 lbs.	31 lbs.	47 lbs
Standard Mesh	Resin	1.39 lbs.	1.44 lbs.	10 lbs.	18 lbs
Heavy Duty Mesh	Asphalt	2.22 lbs.	2.96 lbs.	25 lbs.	34 lbs

PACKAGING INFORMATION

Fabrics	Roll Width (150' Long) Nominal	Rolls per Carton	Carton Weights
Glasfab*	48"	4	48#
	36"	6	52#
	24"	6	40#
	18"	12	52#
	12"	18	52#
	9"	24	52#
	6"	36	52#
	4"	54	52#
	3"	72	52#
Glascoat*	36"	6	42#
	24"	8	28#
	18"	12	42#
	12"	18	42#
	9"	24	42#
	6"	36	42#
	4"	54	42#
	3"	72	42#
U. F. Glass Mat Asphalt	36" X 180'	1	21#
U. F. Glass Mat White	36" x 180'	1	7#
Heavy Duty Glass Fiber Mesh	27" X 96'	4	40#
Std. Glass Fiber Mesh	36" X 180'	1	11#

Fabrics	Roll Width (150' Long) Nominal	Rolls per Carton	Carton Weights
Standard Cotton	36"	1	22#
	24"	1	14#
	18"	2	22#
	12"	4	30#
	9"	4	22#
	6"	8	30#
	4"	12	30#
	3"	18	30#
Specification Cotton	36"	1	40#
	24"	1	26#
	18"	2	40#
	12"	3	40#
	9"	4	40#
	6"	6	40#
	4"	9	40#
	3"	12	40#
Jute	36"	1	44#
	24"	1	28#
	18"	2	44#
	12"	3	44#
	9"	4	44#
	6"	6	44#
	4"	9	44#
	3"	12	44#

Roof Maintenance Products and Systems

All roofs require preventive maintenance.

After the roofing system is first applied, the degradation process begins. If the roof is allowed to age unattended, you will be hit with the high cost of replacing the entire roof.

The materials needed to repair or maintain the common built-up roof depends upon the construction and condition of the roof and the nature of the problem. Maintenance or repair isn't merely a matter of adding more bitumen. Each roof responds to the ravages of time and weather in different ways. Each needs specific materials to combat deterioration.

Then there s the flashings, counter-flashing, parapet walls, pitch pans, and wet insulation to be considered. Each of these areas is susceptible to deterioration and damage. Each requires particular materials for maintenance and repair.

Koppers has all the materials necessary to keep your roof in perfect condition. Our Roof Shield System, for instance, can add years of extra life to smooth surface asphalt roofs and our resaturant applications have extended the life of many built-up gravel roofs 50% or more. We have also developed a "Built-Up Roof Inspection Guide" which covers all components of your roof system.

Koppers will be pleased to assist you in putting a Planned Roof Maintenance Program into practice. The life cycle of a roof can be greatly increased if this program is started at the proper time.



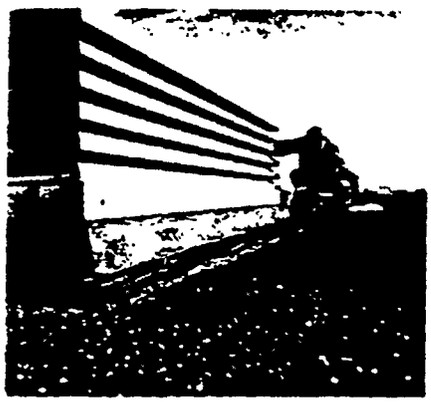





Roof conditions

Dry Felts & Bare Spots: are caused by the oxidation of surface bitumen on gravel roofs. Roof Felts become exposed to attack by the sun s ultra violet rays, and rapid deterioration follows. Koppers roof resaturants help avoid this situation.

Blisters: usually are formed by the presence of moisture resulting in vapor pressure that has been trapped between plies of felt on either gravel or smooth surface roofs. Koppers roof cements and membranes can solve this problem.

Alligatoring: is a condition almost universal to smooth surface hot asphalt roofs. Attack from the sun starts immediately and progresses to the formation of deep roof alligators as time goes by. The appropriate Koppers asphalt emulsions will provide a smooth top surface that will not alligator in the future.

Splits: are the result of excessive movement in the roof system. Freeze-thaw cycles or expansion and contraction may cause roof splits if proper expansion joints have not been provided. Koppers Stripshield and other systems can help control this condition.

Wet Insulation: will greatly effect the performance of any built-up roof. Moisture trapped within the roofing system must be removed. Certain types of insulation can be successfully vented. This can eliminate costly roof replacement.

Worn Flashings: can lead to a total roof failure. Koppers cements and membranes offer a system to restore worn flashings to a "like new" condition. If damage is more severe, our KMM aluminum flashing system offers an approach that will provide a completely new flashing with a durable aluminum top surface.

Effective Maintenance with Tar and Asphalt Roof Resaturants

KOPPERS
Architectural and Construction Materials
7 1 KOP



- **Lowers the softening point of the top pour of bitumen and possibly the first inter-ply.**
- **Restores flexibility to dried or otherwise brittle felt.**
- **Adds additional waterproofing to the surface.**
- **Provides a means of attaching new gravel.**

Purpose:

Many factors play a part in the service life of a roof. Some factors are uncontrollable. Others can definitely be controlled. There are some aspects of roof degradation that will follow a recognized path and the end result can be predicted.

The normal degradation of a built-up roof begins at the top surface. This is understandable since it is the top surface that is subjected to the deleterious elements of the atmosphere. As soon as a roofing bitumen is exposed to these elements, an age hardening process begins. As the softening point of the bitumen increases, cold flow properties diminish and resistance to moisture penetration decreases. The volatizing or subliming of a roofing bitumen takes its toll on the performance characteristics of the bitumen.

At some time prior to the roof reaching the point when maintenance is no longer feasible, preventive maintenance should be established, even though the roof may not be leaking excessively. After considering the age, type of bitumen used to construct the roof, and general condition, the use of Koppers Roof Resaturants offers an effective means of implementing preventive roof maintenance

Tar:

Koppers Roof Resaturant 410 has a base of coal tar roofing bitumen, blended with non-volatile oils and graded asbestos fibers. Roof Resaturant 410 provides the maximum softening effect and penetration obtainable from a product of this type. There is no addition of volatiles that would rapidly evaporate.

Koppers Fiber Coating 415 is a tar base product specially formulated to meet Federal Specification SS-C-540. Fiber Coating 415 contains properly graded asbestos fibers plus selected penetrating oils.

Asphalt:

Koppers Roof Resaturant 425 is an asphalt resaturant designed to have the greatest softening effect available in an asphalt base product. Roof Resaturant 425 is a blend of asphalt and oils combined with asbestos fibers to provide a product suitable for flat or sloped graveled roofs.

Procedure:

1. All loose gravel must be removed from roof. If existing gravel is to be reused, it must be washed free of silt.

2. Silt is removed with water pressure, air pressure or vacuuming. If water is used, the roof must be allowed to dry completely before proceeding.

3. Drains are covered with screens to prevent clogging of the drain system.

4. After the roof is properly cleaned, all necessary repairs are made with compatible materials.

5. Koppers Roof Resaturant is applied evenly onto roof at the rate of seven (7) gallons per square. The application rate may vary with the condition of the roof.

6. Gravel or slag is applied to cover the Koppers Roof Resaturant. Gravel shall be in the ¼-⅜" range, and must be washed. Care must be taken to avoid exceeding weight limits of the roof deck.

Effective Maintenance with Tar and Asphalt Roof Resaturants

KOPPERS
Architectural and Construction Materials
7 1 KOP



- **Lowers the softening point of the top pour of bitumen and possibly the first inter-ply.**
- **Restores flexibility to dried or otherwise brittle felt.**
- **Adds additional waterproofing to the surface.**
- **Provides a means of attaching new gravel.**

Purpose:

Many factors play a part in the service life of a roof. Some factors are uncontrollable. Others can definitely be controlled. There are some aspects of roof degradation that will follow a recognized path and the end result can be predicted.

The normal degradation of a built-up roof begins at the top surface. This is understandable since it is the top surface that is subjected to the deleterious elements of the atmosphere. As soon as a roofing bitumen is exposed to these elements, an age hardening process begins. As the softening point of the bitumen increases, cold flow properties diminish and resistance to moisture penetration decreases. The volatizing or subliming of a roofing bitumen takes its toll on the performance characteristics of the bitumen.

At some time prior to the roof reaching the point when maintenance is no longer feasible, preventive maintenance should be established, even though the roof may not be leaking excessively. After considering the age, type of bitumen used to construct the roof, and general condition, the use of Koppers Roof Resaturants offers an effective means of implementing preventive roof maintenance

Tar:

Koppers Roof Resaturant 410 has a base of coal tar roofing bitumen, blended with non-volatile oils and graded asbestos fibers. Roof Resaturant 410 provides the maximum softening effect and penetration obtainable from a product of this type. There is no addition of volatiles that would rapidly evaporate.

Koppers Fiber Coating 415 is a tar base product specially formulated to meet Federal Specification SS-C-540. Fiber Coating 415 contains properly graded asbestos fibers plus selected penetrating oils.

Asphalt:

Koppers Roof Resaturant 425 is an asphalt resaturant designed to have the greatest softening effect available in an asphalt base product. Roof Resaturant 425 is a blend of asphalt and oils combined with asbestos fibers to provide a product suitable for flat or sloped graveled roofs.

Procedure:

1. All loose gravel must be removed from roof. If existing gravel is to be reused, it must be washed free of silt.

2. Silt is removed with water pressure, air pressure or vacuuming. If water is used, the roof must be allowed to dry completely before proceeding.

3. Drains are covered with screens to prevent clogging of the drain system.

4. After the roof is properly cleaned, all necessary repairs are made with compatible materials.

5. Koppers Roof Resaturant is applied evenly onto roof at the rate of seven (7) gallons per square. The application rate may vary with the condition of the roof.

6. Gravel or slag is applied to cover the Koppers Roof Resaturant. Gravel shall be in the ⅜-⅝" range, and must be washed. Care must be taken to avoid exceeding weight limits of the roof deck.

Description

Koppers Heavy Duty Roof Shield System combines two Koppers roofing materials, Heavy Duty Glass Fiber Mesh and Liquid Asphalt 480.

Liquid Asphalt 480 is a filled, cold applied, high-quality asphalt emulsion containing Bentonite clay. It is the waterproofing component of the Heavy Duty Roof Shield System. The unique gel structure of Liquid Asphalt 480 will not alligator, blister, or flow in hot weather.

Heavy Duty Glass Fiber Mesh is a patented reinforcing mat of a non-woven jackstraw pattern of short cable strands of glass fiber. Each strand is composed of more than 200 glass monofilaments and is completely surrounded with the Liquid Asphalt 480, thereby eliminating water wicking by capillarity into the waterproofed surface.



Application

1. Surface Preparation. If there is a question to the soundness of the existing roof and insulation, a core cut should be made. All minor repairs must be made prior to priming. ANY blister containing moisture must be allowed to DRY before repair is made.

2. Priming. Every effort should be made to remove dust from the surface. If the dust cannot be completely removed, Koppers High Penetration Primer #452 should be applied at the rate of approximately ¼ gallon per 100 sq. ft.

If a primer is used, it must be allowed to dry thoroughly before proceeding with Roof Shield application.

3. Flashing. Flashing areas shall be examined, repaired and primed as required. Roof Shield should be applied first to flashing areas.

4. Application. Brush or spray-on an embedding coat of Liquid Asphalt 480 at the rate of 4 gallons per 100 sq. ft. Do not apply if temperatures below 40°F. are expected within 8 hours or if rain is expected before the emulsion has time to dry

While the emulsion is wet, embed Heavy Duty Glass Fiber Mesh into it with firm brush pressure forcing the emulsion through and around the glass strands. Each succeeding glass strip should overlap the preceding one by 2 inches. Roll ends of Heavy Duty Glass Fiber Mesh should overlap 6 inches. Do not allow dry or starved laps. Permit Liquid Asphalt 480 and Heavy Duty Glass Fiber Mesh to dry sufficiently to permit foot traffic.

After the embedding coat is dry, a top coat of Liquid Asphalt 480 is sprayed or brushed on at the rate of 3 gallons per 100 sq. ft.

Asphalt Base Aluminum Coatings

Koppers asphalt base aluminum coatings contain pure aluminum paste consisting of millions of tiny pigment flakes. When the coating is applied, these flakes rise to the surface and arrange themselves into many shingle-like layers of aluminum. The result is a reflective metal surface that protects the substrate from the elements. With Koppers aluminum coatings, there is no peeling or separating because the asphalt base securely bonds the aluminum to the protected surface.

Three Basic Aluminum Coating Compositions:

Aluminum Coating 434 contains three pounds of extra quality aluminum paste per gallon of high grade, non-fibrated asphalt base.

Aluminum Coating 435 contains three pounds of extra quality aluminum paste per gallon. This coating is reinforced with asbestos fibers for a thicker, tougher coating and extra life.

Aluminum Coating 444 contains two pounds of extra quality aluminum paste per gallon of high grade non-fibrated asphalt base.

Aluminum Coating 445 is the same as 435 but contains two pounds of paste per gallon.

Application:

1. **Preparation**—The surface to be coated should be cleaned of all loose material such as gravel, dirt, dust, rust or scale. All breaks, cracks, holes and other structural deficiencies should be repaired prior to applying the Aluminum Coating.

2. **Priming**—Before applying Aluminum Coatings to roofs, dry or dusty felts should be primed with Koppers Hi-Penetration Primer 452 at the rate of approximately ¼ gallon per 100 square feet. This preliminary step insures proper adhesion of the Aluminum Coating.

3. **Coating**—Stir thoroughly before and occasionally during application. Apply with spray or brush.

4. **Curing**—Allow one month curing time before application over new asphalt emulsion coated roofs. Allow three months curing time before application over new asphalt or solvent type asphalt coated roofs. Do not apply over "dead level" surfaces subject to standing water.

COVERING CAPACITY	Type of Surface	Non-Fibrated Aluminum	Fibrated Aluminum
(Per 100 sq. ft.)	Metal	¼ to ½ gallon	1 to 1½ gallons
	Composition	½ to 1 gallon	2 to 3 gallons

Information contained in this bulletin is presented in good faith, but it is not to be inferred that by publication hereof by Koppers Company, Inc., nor by the use or employment by the reader of any suggestions or method contained herein, that Koppers Company, Inc. has assumed any liability for infringement of any patent, foreign or domestic, nor given any warranty, expressed or implied.

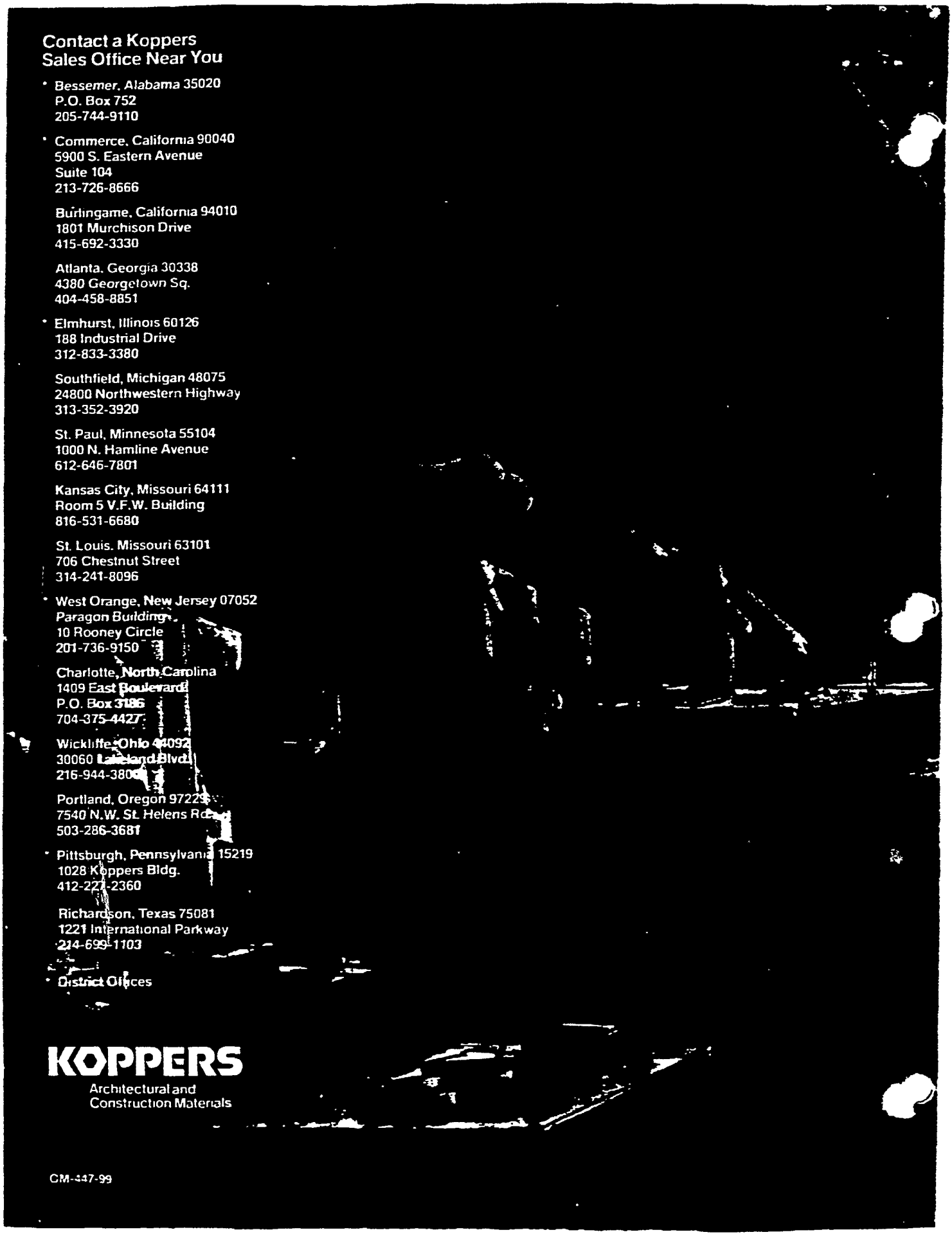

Contact a Koppers Sales Office Near You

- Bessemer, Alabama 35020
  P.O. Box 752
  205-744-9110
- Commerce, California 90040
  5900 S. Eastern Avenue
  Suite 104
  213-726-8666

  Burlingame, California 94010
  1801 Murchison Drive
  415-692-3330

  Atlanta, Georgia 30338
  4380 Georgetown Sq.
  404-458-8851
- Elmhurst, Illinois 60126
  188 Industrial Drive
  312-833-3380

  Southfield, Michigan 48075
  24800 Northwestern Highway
  313-352-3920

  St. Paul, Minnesota 55104
  1000 N. Hamline Avenue
  612-646-7801

  Kansas City, Missouri 64111
  Room 5 V.F.W. Building
  816-531-6680

  St. Louis, Missouri 63101
  706 Chestnut Street
  314-241-8096
- West Orange, New Jersey 07052
  Paragon Building
  10 Rooney Circle
  201-736-9150

  Charlotte, North Carolina
  1409 East Boulevard
  P.O. Box 3186
  704-375-4427

  Wickliffe, Ohio 44092
  30060 Lakeland Blvd.
  216-944-3800

  Portland, Oregon 97229
  7540 N.W. St. Helens Rd.
  503-286-3681
- Pittsburgh, Pennsylvania 15219
  1028 Koppers Bldg.
  412-227-2360

  Richardson, Texas 75081
  1221 International Parkway
  214-699-1103
- District Offices

KOPPERS
Architectural and
Construction Materials

CM-447-99