PLAINTIFF'S EXHIBIT
UC-142

TECHNICAL SERVICE REPORT

THE EVALUATION OF ASBESTOS T-135 AS A PARTIAL REPLACEMENT FOR TITANIUM DIOXIDE

for

Brown Company
Holyoke, Massachusetts

by

G. L. Dickson

Group Manager - W. L. Carrick

Project No. 443-N11

July 25, 1968

A17102

UNION CARBIDE CORPORATION
Chemicals & Plastics
Research and Development Department
Niagara Falls, New York 14302

September 3, 1968

SUBJECT

This report covers the paper machine trial of Union Carbide's Asbestos T-135 at the Brown Company mill in Holyoke, Massachusetts on July 25, 1968. The objective of the trial was to evaluate Asbestos T-135 as a partial replacement for titanium dioxide in a furnish used in the production of high brightness cover papers.

TRIAL RESULTS

Asbestos T-135 was evaluated at a 2-1/2% level as a direct replacement for 50% of the titanium dioxide normally used in the trial grade of paper sheet. Opacity specifications were maintained throughout the trial, and no operational problems were encountered. Because of the detrimental effect of T-135 on the optical brightener present in this furnish, it was necessary to add an additional 50% of this material in order to obtain the desired brightness (90% G.E.). Therefore, the $3.00 per ton savings affected by the substitution of T-135 for titanium dioxide was more than offset by the $5.00 per ton cost for additional fluorescent dye.

TRIAL DISCUSSION

Because of the short production run on the trial grade of paper, no pre-trial control data were obtained at this time. Two and 1/2% Asbestos T-135 (50 lb./ton) was included in the furnish at the beginning of the trial, and maintained at this level until the completion of the run. Only 50 lb. of titanium dioxide were added to the furnish instead of the usual 100 lb. (Complete furnish and paper machine data are included in the attached Mill Trial Data Sheets.) Although there was no problem maintaining the required sheet opacity, brightness was lowered because of a decrease in efficiency of the optical dye present. (Blancophor). To compensate for this, the concentration of optical dye in the size press starch was increased from 2 lb. per ton of production to 9 lb. per ton of production. Twenty lb. of Blancophor were added to the furnish (per ton of fiber) instead of 16 lb. which is normally required. Thus, the approximate increase in cost due to fluorescent dye was $4.95 per ton of production. (¢0.45 x (4+7)). The savings resulting from the substitution of 50 lb. of Asbestos T-135 for an equal amount of titanium dioxide is calculated as $3.00. ($0.22-0.16) x 50). Thus, the net effect was an increase in furnish costs of about $2.00 per ton.

A17103

The results of chemical analyses of wet end and reel samples obtained during the trial, although of only academic interest at this time, are presented in Tables I and II attached. Table III contains filler retention values calculated by three different methods.

CONCLUSIONS

The use of Asbestos T-135 will not be feasible in many of this mill's production grades because of its detrimental effect on the optical dyes added to their furnish. Limited usage may be possible in lower brightness papers (80-85 G.E.), or in sheets where the majority of the optical dye is added at the size press. As the loss in optical efficiency is usually minimized by size press applications, it is recommended that future evaluations by their people be restricted to production which contains only a very small amount of internally added optical brighteners.

G.L.Dickson/bsn
Attach.

A171C4

TABLE I

Brown Company
Holyoke, Massachusetts

July 25, 1968

Wet End Samples Analyses

Time Sampled	% Consistency	% Ash	% TiO_2	% Asbestos T-135
		Jordan Box		
12:00 Midnight	-	5.29	2.15	3.02
3:30 a.m.	-	5.62	2.85	2.96
Average	-	5.46	2.50	2.99
		Headbox		
12:00 Midnight	0.841	5.68	2.52	3.45
3:30 a.m.	0.905	5.61	2.66	2.90
Average	0.873	5.64	2.59	3.18
		Tray Water		
12:00 Midnight	0.047	29.03	10.64	16.88
3:30 a.m.	0.058	21.80	9.56	10.66
Average	0.052	25.42	10.10	13.77

A17105

TABLE II

Brown Company
Holyoke, Massachusetts

July 25, 1968

Reel Samples Analyses

Time Sampled	% Ash	% TiO_2	% Asbestos T-135
12:15 a.m.	4.43	1.89	2.65
2:45 "	4.41	1.79	2.53
3:40 "	4.56	1.99	2.46
4:40 "	4.61	2.14	2.59
5:40 "	4.77	2.18	2.65
6:45 "	4.74	2.13	2.46
7:40	4.53	2.32	2.40

TABLE III

Brown Company
Holyoke, Massachusetts

July 25, 1968

Filler Retention

Time	% Ash	% TiO_2	% Asbestos T-135
I Machine Retention: (Reel/Jordan Box) x 100			
12:00 Midnight	83.7	87.9	87.7
3:30 a.m.	81.1	69.8	83.1
Average	82.4	78.8	85.4
II One Pass Retention: (Reel/Headbox) x 100			
12:00 Midnight	78.0	75.0	76.8
3:30 a.m.	81.2	74.8	84.8
Average	79.6	74.9	80.8
III Wire Retention: $1-(Concentration_{Tray}/Concentration_{Headbox}) \times 100$			
12:00 Midnight	73.8	76.4	72.7
3:30 a.m.	51.0	77.0	76.2
Average	62.4	76.7	74.4

A17107

UNION CARBIDE CORPORATION
MINING & METALS DIVISION

MILL TRIAL DATA SHEET

I. COMPANY LOCATION AND DATE OF TRIAL Brown Co. Holyoke, Mass. July 25, 1968

II. COMPANY REPRESENTATIVES AND TITLES Ed. Bieniek: Technical Director, Ed. Brogle: Mill Supt., Bill Burnett & Al. Crochetiere: Tour Bosses, George Upton & Hal. MacDonald: Color men

III. UCC REPRESENTATIVES T. E. Dougherty and G. L. Dickson

IV. TRIAL OBJECTIVES (In order of importance) To evaluate Ashestos T-135 as a partial replacement for titanium dioxide

V. PRODUCT IDENTIFICATION

Type of Product White cover (High Brightness) Coated ~~Yes~~/No

Grade Name Eagle A Linweave L'Aiglon Radiant White Text

Basis Weight 31-1/2 & 47 lb. (17 x 22-500)

Daily Production 33 tons Lb./hour 2700

Total Daily Production of Mill -

(Tissue and Board) No. of Plys -

VI. MACHINE DESCRIPTION

Type of Machine Fourdrinier with open headbox, dandy roll & marking rol on third press.

Machine No. 1 (Mill 14) (Cylinder) No. of Cylinders -

Machine Speed 145&225 FPM (Tissue) Reel Speed -

(Tissue) % Crepe - Wire Mesh -

Wire Width 123 inches Machine Trim 114 inches

Size Press Vertical* Calenders Double (0 & 1 nip)

*Optical Brightener added to size press starch

A17108

VII. AUXILIARY EQUIPMENT

Refiners	Type	Location	Loading (amp.)

Saveall (Type) Cylinder Flow Rate Not in operation

VIII. STOCK PREPARATION - Continuous or Batch

Type Beater and Capacity 2000-lb. Morden

No. of Beater Chests and Capacity

Machine Chest Capacity 4000 lb.

Stock Freeness (Mach. Chest and Stuff Box) (Not measured)

Headbox Consistency

Makeup pH Machine pH 4.0-4.4

IX. FURNISH MAKEUP* Basis (lb./ton, etc.)

Furnish Constituent	%	Pounds
Bleached hardwood kraft	60	1188
Bleached softwood sulfite	40	840
Broke	10	
Titanium dioxide*		50
Asbestos T-135		50
Rosin size	35-65 gal.	7.7-13.6
Talc (NP Pulv.)		50
Sodium Silicate		1 gal.
Alum		3-5 gal.
Tinting Dyes		Refer to page 3
Optical Brightener		20 lb Blancophor

* For board systems include furnish for each medium - topliner, underliner, filler, and backliner.

Retention Aid — Small amount added to headbox shower during latter portion of trial.

*100 lb. of titanium dioxide (Finntitan AP) normally required.

A17109

X. ASBESTOS ADDITION - Pellet Repulper (Type) None

Asbestos Grade T-135 Lot No. 5312-4

Point of Addition Morden Pulper

Pounds of Asbestos Added 50 per ton BDF 50 per beater

_____ per hour

Per cent asbestos addition on BDF 2-1/2%

XI. SUPPLEMENTARY INFORMATION

Quality Control Data Record

Stock Prep. Log

Sampling (in order of importance)

Pitch & Retention Trials	Board Trials	Tissue and Towel
*Reel	Tray Water	Stuff box
*Stuff box (Jordan Box)	Vat	Reel
*Headbox	Stuff box	Headbox
*Tray	Reel	
Saveall effluent	Saveall effluent	
Saveall influent	Saveall influent	

Identify samples by name, date, time

Wet samples should approximate 500 ml.

Weight of BD filter pad is required for all vat, tray, and saveall samples.

Tinting Dyes

1-1/4 oz. Solar blue
8-4 oz. Ochre
5-0 oz. Yellow 5G
0-1/4 oz. Super Red G

A1711C

XII. TRIAL LOG (Comments including changes in furnish and operating conditions)

Time	Comments
July 25, 1968	
	Production of parchment grade terminated due to size press color problem.
9:50 p.m.	Startup on 47-lb. radiant white text. No pre-trial control period.
11:15 p.m.	Change to 31-1/2 lb. Radiant white text
12:15 a.m.	Clinton cornstarch addition to mixing box reduced by 20%
July 26, 1968	
11:30	Trial terminated due to completion of production.

Recorded by_____ Date_____

Witnessed and Understood by_____ Date_____

A17111

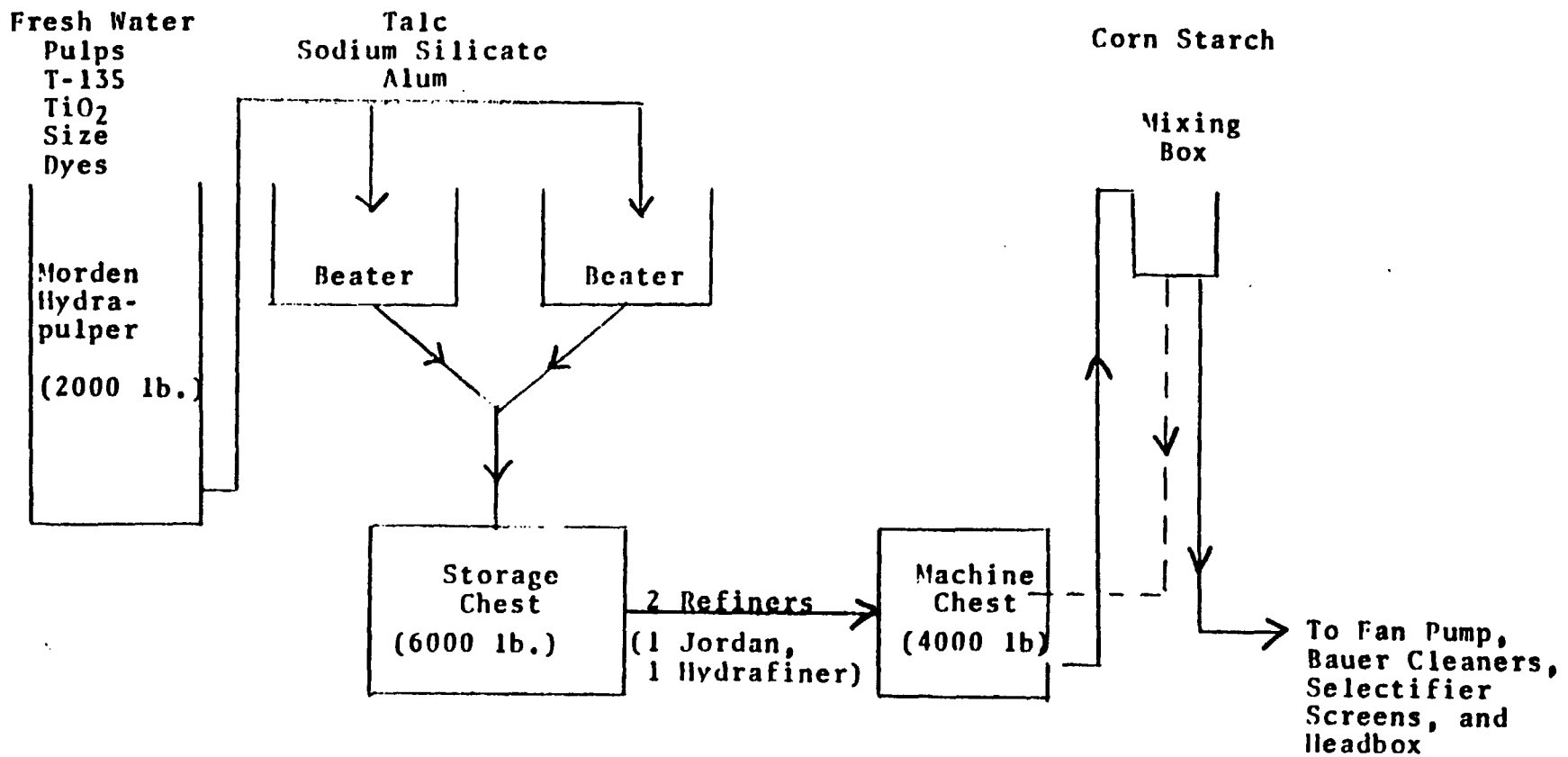

Figure I Schematic of No. 1 machine and point of addition for stock additives.

A17113

DISTRIBUTION LIST

Messrs.	B. K. Barton	Chicago
	L. D. Berger	New York
	W. L. Carrick	Bound Brook
	F. D. Dexter/	New York
	N. J. Setter	New York
	G. L. Dickson	Niagara Falls
	B. D. Dobbs	Cincinnati
	T. Dougherty	New York
	T. J. Hall	Brussels, Belgium
	P. G. Horecka	Chicago
	G. E. Kuehn	Detroit
	R. T. Larkin	Seattle
	J. K. Marshall	Charlotte
	J. S. McReynolds	Houston
	R. A. Miller	Atlanta
	G. J. Norberg	Charlotte
	E. J. O'Keeffe	Dallas
	T. R. Orme	Los Angeles
	A. E. Pufahl (2)	New York
	J. A. Riddle/	King City
	~~J. L. Myers~~	King City
	H. B. Rhodes	Niagara Falls
	R. T. Scott	Detroit
	J. Sidlovsky	New York
	J. H. Stevens	New York
	F. H. Thompson	Niagara Falls
	R. M. Tong	New York
	J. F. Voit	New York
	F. J. Welch	South Charleston
Miss.	J. Ulrey	Bound Brook

A17113

Mr. T. E. Dougherty
Chemicals & Plastics
Union Carbide Corporation
270 Park Avenue
New York, New York 10017

September 10, 1968

See Attached Distribution

Brown Company
Holyoke, Massachusetts
T-135 Trial
July 25, 1968

The attached report covers the evaluation of Asbestos T-135 at the Brown Company mill in Holyoke, Massachusetts on July 25, 1968. It is evident from the trial results that T-135 will not be acceptable for use in most of their white paper furnishes because of its incompatibility with the fluorescent dyes normally present. It is possible that our material can be used in limited amounts for the production of lower brightness grades, where none or only small amounts of optical brighteners are utilized. Although this will drastically reduce our sales potential at this mill, Ed Bieniek, their Technical Director, stated that he would run a trial on this type of furnish in the near future.

G. L. Dickson

GLD/bsn
Attach.

A17101