A

VISTA CHEMICAL COMPANY

ABERDEEN, MISSISSIPPI

HAZARD AND OPERABILITY STUDY

FOR

TC COMPLIANCE PROJECT

July 1990

VAB.0001089207

A

VISTA CHEMICAL COMPANY

ABERDEEN, MISSISSIPPI

HAZARD AND OPERABILITY STUDY

FOR

TC COMPLIANCE PROJECT

DEPARTMENTAL APPROVAL:_____

PROJECT APPROVAL:_____

July 1990

VAB.0001089208

A

TABLE OF CONTENTS

HAZOP REPORT VOLUME

Legal Notice. i
List of Abbreviations. ii

1.0 Purpose. 1-1

2.0 Scope. 2-1

3.0 Methodology. 3-1
3.1 Introduction. 3-2
3.2 Team Members. 3-4
3.3 Documents made available. 3-5
3.4 Forms used. 3-6
3.5 Preliminary hazard identification. 3-6
3.6 Criticality evaluation 3-7

4.0 Mitigation Summary 4-1

5.0 P&IDs. 5-1

APPENDIX

A. Study Data Report A-1

A

LEGAL NOTICE

This report was prepared by VISTA Chemical Company ("VISTA") for internal use only. Neither Vista nor any affiliated organizations, nor any person acting in their behalf, (a) makes any warranty, express or implied, with respect to the use of any information or methods disclosed in this report; or (b) assumes any liability with respect to the use of any information or methods disclosed in this report.

VAB.0001089210

LIST OF ABBREVIATIONS

AHM	Accurately Hazardous Materials
ATMOS	Atmosphere
BETWN	Between
CHG	Charge
CK	Check
CS	Carbon Steel
CT	Cooling Tower
CW	Cooling Water
CWR	Cooling water return
CWS	Cooling water supply
DHP	Drum Handling Procedure
ELEC	Electrical
EQ	Equipment
ESD	Emergency Shut Down
ETOH	Ethanol
FA	Drum
FD	Feed
FL	Filter
FR	From
FV	Flow valve
GA	Pump
H2O	Water
HAZAN	Hazard Analysis
HAZOP	Hazard & Operability Study
HC	Hydrocarbon
HDR	Header
HP	High Pressure
ID	Identification
IMP	Implausible
INJ	Injection
INSUL	Insulation
LG	Level gage
LIQ	Liquid
LP	Low Pressure
LT	Level transmitter
MAINT	Maintenance
MATLS	Materials
MAX	Maximum
MOC	Material of Construction
MOV	Motor Operated Valve
MSDS	Material Safety Data Sheet

VAB.0001089211

VISTA COMPANY CONFIDENTIAL
Aberdeen

LIST OF ABBREVIATIONS

NAP	Not a problem
NO	Normally Open
OPS	Operations
OTP	Operator Training & Procedures
OVHD	Overhead
P	Pressure
P&ID	Piping & Instrumentation Diagram
PG	Pressure Gage
PIC	Pressure Indicating Controller
PP	Diaphragm Pump
PPG	Personnel Protective Gear
PRES	Pressure
PSH	Pressure Switch High
PSIG	Pounds per square inch gage
PSV	Pressure Safety Valve
REGS	Regulations
REV	Revision
RO	Restriction orifice
RV	Relief Valve
S	Spare
S/D	Shut Down
SCC	Stress Corrosion Cracking
SPEC	Specification
SS	Stainless Steel
STD	Standard
STM	Steam
SW	Service water
SYST	System
TA'S	Turn Arounds
TCV	Temperature Control Valve
TEMP	Temperature
THERM	Thermal
THRU	Through
VCM	Vinyl Chloride Monomer
VOC	Volatile Organic Carbon

QTP 4-8

SECTION 1.0 PURPOSE

The VISTA Chemical Company (Aberdeen, Mississippi) TC Compliance Project Hazard and Operability (HAZOP) study was conducted to serve many purposes. It will be used to:

- Provide management with the knowledge of where potential hazards exist in the TC Compliance modifications.
- Provide safety and operations related documentation for lines and pieces of equipment included in these modifications.
- Provide a prioritized basis for subsequent risk analysis/assessment work, if necessary.
- Provide documentation for a Risk Management and Prevention Program.
- Provide training on HAZOP methodology and techniques for Vista personnel.

Performing a HAZOP study is generally an assurance that if procedural and/or engineering modifications are implemented to mitigate risk, the plant will then be operating under some lower risk. It is not, however, a guarantee that no risk exists, nor does it guarantee that hazardous events or operating problems will not be encountered.

SECTION 2.0 SCOPE

Vista Chemical Company operates a nominal capacity 445 million pound per year PVC plant located in Aberdeen, Mississippi. The plant polymerizes VCM in batch reactors to produce PVC.

The TC compliance project for the Aberdeen plant is the subject of this HAPOL study. The project includes:

- The Cleanwall Injection System
- The Batch Water Stripper Dump Modifications
- The Low Mole Reactor Jacket Cooling Modifications

The hazard identification study focused on the following potential hazards:

- Personnel injury/death resulting from
  - Fire
  - Explosion
  - Toxic exposure
  - Chemical Contact
  - Thermal Burns
  - Asphyxiation
  - Impact injury
  - Etc.
- Equipment/property damage resulting from
  - Fire
  - Explosion
  - Corrosion
  - Misoperation
  - Overpressure
  - Vacuum
  - Overheating
  - Etc.
- Production loss resulting from
  - Equipment damage
  - Maintenance
  - Off specification
  - Turn arounds
  - Raw Material Considerations
  - Etc.
- Environmental
  - Spills
  - Fugitive Emissions
  - Waste Water Excursions
  - Etc.

The HAZOP methodology used during the study is contained in Section 3, the mitigation for the critical identified hazards is contained in Section 4, and the criticality sort/data base is contained in an Appendix.

VAB.0001089214

SECTION 3.0 METHODOLOGY

3.1 Introduction

3.2 Team Members

3.3 Documents Made Available

3.4 Forms Used

3.5 Preliminary Hazard Identification

3.6 Criticality Evaluation

VAB.0001089215

SECTION 3.1 INTRODUCTION

A Hazard and Operability (HAZOP) study is a simple, yet structured methodology for hazard identification. It is an investigation technique which utilizes imaginative thinking in the identification of hazards and operational problems.

A HAZOP study involves a systematic, methodical examination of design documents that describe the facility. The study is performed by a multidisciplinary team to identify potential hazards or operability problems that could result in an accident. Deviations from the design value of key parameters are studied using guide words to control the examination evaluation. This presumes that the design values of flows, temperatures, and other process variables are inherently safe and operable. The study team consists of trained personnel knowledgeable in the technology and operations, and the team will have the necessary technical expertise to answer most questions raised during the review without outside assistance.

As a starting point, we will define the following terms:

Hazard: Anything (chemical reaction, equipment malfunction or operator error) that can lead to an unwanted event.

Operability: Anything that causes the operator to improvise in his actions.

These definitions are an important part of the basic HAZOP premise that the process does not have inherent hazards or operating problems when the unit is operating within design parameters as defined by the basic documents such as the Process Flow Diagrams, equipment specifications, operating procedures, etc. In other words, if there are no deviations from the expected norm, by definition there are no hazard or operability problems.

When performing a HAZOP, a proper mix of meeting participants is very important. The mix of participants should normally include most if not all of the following:

- Team leader
- Process engineer
- Mechanical engineer
- Plant operator
- Maintenance
- Electrical
- Safety
- Team recorder
- Instrumentation

VAB.0001089216

Of these personnel, many are often only part time participants but remain on call for assistance. It can be seen that the electrical, maintenance and other subjects may only be required on a consulting basis. Also, it is important to keep the size of the review team to a manageable number such as between five to seven so that all members of the team can participate while keeping the effort moving.

The agenda followed during the HAZOP team meetings is as follows:

1 • Introduce team members: A short biographical sketch by each team member.
3 • HAZOP methodology: A presentation is made by the team facilitator of the methodology to be used in the study. This also establishes the team member "mind set" necessary to conduct an effective HAZOP.
4 • AHM properties: An identification and discussion by an industrial hygienist or other knowledgeable person is presented to establish a team recognition of the AHM toxic and hazardous properties.
• Identify hazards: A preliminary identification by team members of hazards present within the process. This serves to focus the HAZOP study.
2 • Purpose or goal of HAZOP: A general presentation of the purpose or goal of the HAZOP is made. This serves to direct the HAZOP study.
• Scope the HAZOP: Once the AHM properties are established and discernible HAZOP hazards are identified, the HAZOP scope is set.
• Establish criticality and frequency ratings: Hazard classification matrix parameters are set by the team for subsequent screening of HAZOP identified hazards.
• Define dispersion models: The team identifies AHM release scenarios which will be different cases for dispersion modeling outside of the HAZOP team meeting.
• Process description: A detailed process discussion is presented by the Process Engineer to familiarize the HAZOP team with process scenarios which may lead to a hazardous condition as well as to ensure that all team members have a clear understanding of the basic process.
• PCHAZOP* on-line: Load the PCHAZOP* computer program for recording HAZOP team proceedings.
• HAZOP team meetings: A systematic segment by segment team review of the facilities contained within the job scope is executed.
• HAZOP report: A formal report is prepared by the team facilitator, reviewed and commented by the other members, and then becomes a permanent record of the team meetings. Guidelines are presented later in the chapter for report contents.

VAB.0001089217

The HAZOP identified thirteen (13) critical ranked potential hazards:

- One (1) with a criticality rank of 1, i.e., those which must be improved
- Thirteen (13) with a criticality rank of 2, i.e., those which should be improved.

Suggested mitigation for the critical ranked hazards is covered in Section 4.0.

The HAZOP identified five (5) non-critical ranked hazards which require verification that the appropriate engineering and/or administrative controls are in place.

The team identified no hazards of the most critical ranking, that is a hazard rated I-A, i.e., a hazard which could potentially cause A LOST TIME ACCIDENT more often than once per year. In the event the HAZOP team did identify a hazard that it considered to represent an imminent danger to life or property, the team would have given a verbal presentation to plant management in order to expedite any required mitigation.

SECTION 3.2 TEAM MEMBERS

The HAZOP study team assembled to identify potential hazard or operability problems should be composed of a multiple disciplined team with the sufficient technical expertise to answer most guide word deviation questions without resorting to further expertise.

The HAZOP study team meetings were held at the VISTA plant site in Aberdeen, Mississippi. The team members conducting the HAZOP study on the VISTA Chemical Company TC Compliance Project are as follows:

ATTENDEE	COMPANY	EXPERTISE/RESPONSIBILITY
Nathaniel Wilson*	VISTA	Operations
Craig English*	VISTA	Electrical
John Wright*	VISTA	Process Engineer - Houston
Doug Knittig*	VISTA	Process Engineer
Sherry Ingwerson*	VISTA	Project Engineer
Dale Nawrocki*	VISTA	Process Engineer - OKC
Pete Schirber*	VISTA	Process Engineer - Houston
Dave Moore*#	VISTA	Process Engineer
Dale Andrews*	VISTA	Instrument Technician
Steve Hillman#	VISTA	Process Engineer
William Early*	Stone & Webster	Trainer/Facilitator

* = full time
\# = part time

VAB.0001089218

A

SECTION 3.3 DOCUMENTS MADE AVAILABLE

Prior to the start of the HAZOP, the necessary reference documentation needs to be assembled and made available for use and reference during the HAZOP team study. A meaningful HAZOP study cannot be conducted without the required documentation to review. Assembly of the documentation optimizes the chance for a successful HAZOP. The documents used in this study were:

- Cleanwall Injection Project - Class "A" Design, April 11, 1990.
- Batch Water Stripper Modifications project - P&ID.
- Reactor Jacket Cooling Modifications Project - P&ID.

VAB.0001089219

SECTION 3.4 FORMS USED

The HAZOP team data was recorded on standardized forms containing the key questions and answer elements of the HAZOP; one form for each line segment investigated, one form for each equipment item investigated.

The results of the HAZOP studies were recorded on the SWEC proprietary computerized program "PCHAZOP", which is a PC based program designed to provide a simple method for recording and documenting the HAZOP process. The program is designed to run in a database environment to facilitate data storage and retrieval.

The results of the HAZOP studies are included in the Appendix sorted according to equipment number or line segment.

SECTION 3.5 PRELIMINARY HAZARD IDENTIFICATION

During the initial stage of the HAZOPs, the team should prepare a preliminary list of potential hazards likely to be encountered during the study. This serves to establish the team's mind-set in hazard identification and focus attention during the study.

The preliminary hazard identification yielded the following five hazards:

- **Impact** - from a fall or from contacting rotating heavy machinery potentially causing physiological injury and or death.
- **Fire** - resulting from the ignition of a flammable material potentially causing physiological injury and or equipment damage.
- **Explosion**
  - contained - resulting from the ignition of an explosive mixture within a vessel potentially causing physiological injury due to the overpressure wave, thermal radiation, or missile fragment projectiles
  - uncontained - resulting from the ignition of an explosive mixture such as a vapor or dust cloud potentially causing physiological injury due to the overpressure wave, or thermal radiation.
- **Thermal burn** - resulting from the contact with a hot or cold material potentially causing physiological injury due to thermal stress.
- **Toxic exposure** - resulting from personnel exposure to an acutely hazardous material potentially causing physiological injury and or death.

VAB.0001089220

A

SECTION 3.6 CRITICALITY EVALUATION

During the initial stage of the HAZOPs, the team should develop a criticality rating and a probability rating for preparation of a hazard ranking matrix. This is to allow screening of identified hazards by prioritization and sorting to focus subsequent corrective action on the significant identified hazards; eliminating the insignificant or trivial hazards from any further consideration.

To this end, a hazard rating index and a risk ranking matrix was developed in the HAZOP team review as follows:

HAZARD RATING INDEX

Criticality Rating

I	Major	An incident which may result in a possible lost time injury, or a reportable VCM release, or major damage or production loss greater than $1,000,000
II	Severe	An incident which may result in a restricted work case, or a VCM release, or severe damage or production loss between $50,000 and $1,000,000
III	Moderate	An incident which may result in a recordable injury, or moderate damage or production loss between $10,000 and $50,000
IV	Slight	An incident which may result in slight damage or production loss less than $10,000

Frequency Rating

A	Frequent	Expected to occur frequently in the life of a single plant, i.e., may occur more frequently than once per year
B	Probable	Expected to occur in the life of a single plant, i.e., may occur between 1 and 100 years
C	Occasional	Could occur in the life of a single plant but expected to occur once in the life of multiple plants, i.e., may occur between 100 and 10,000 years
D	Remote	Unlikely to occur in the life of multiple plants, i.e., may occur less frequently than once per 10,000 years

VAB.0001089221

RISK RANKING MATRIX

CRITICALITY	Frequency A	Frequency B	Frequency C	Frequency D
I	1	1	2	4
II	1	2	3	4
III	2	3	4	4
IV	4	4	4	4

The risk ranking codes assigned to each grid of the risk ranking matrix are as follows:

Risk Ranking

1	Unacceptable	Mitigation planning should be completed within six months using engineering and/or administrative controls to reduce the risk ranking to a 3 or less.
2	Undesirable	Mitigation planning should be completed within twelve months using engineering and/or administrative controls to reduce the risk ranking to a 3 or less.
3	Acceptable With Controls	Should be verified that procedures or controls are in place
4	Acceptable as is	No mitigation action required

A

SECTION 4.0 MITIGATION

SECTION 4.1 MITIGATION SUMMARY

ITEMS WITH A CRITICAL RANK OF 1

Risk Code I-A

No references ~~sifted~~ sighted.

Risk Code I-B

One reference ~~sifted~~ sighted.

Item 1 Static charge due to inadequate grounding of Bus drum fire and possible explosion resulting in personnel injury.

- see page 1

Risk Code II-A

No references ~~sifted~~ sighted.

ITEMS WITH CRITICAL RANK OF 2

Risk Code I-C

No references ~~sifted~~ sighted.

Risk Code II-B

Two references ~~sifted~~ sighted.

Item 1 Wrong material fed to BUS tank due to mix up by supplier or warehouse resulting in contaminated BUS and possible off-spec and/or lost production.

- see page 1

VAB.0001089223

A

Item 2 Catastrophic failure of BUS reactor inlet lines due to vibration or impact resulting in VCM release and personnel exposure.

- see page 2

Risk Code III-A

Eleven references ~~sifted.~~ sighted.

Item 1 Increased BUS drum pressure and/or temperature due to an external heat source resulting in rupture and possible personnel exposure.

- see pages 1,2

Item 2 Low or no flow and possible high pressure in feed line to BUSS tank due to blocked line, closed valve, plugged filter, failed pump, or empty drum resulting in possible loss of production.

- see pages 3,4,5,6

Item 3 Low or no flow in BUSS supply lines to the reactor areas due to blocked line, failed instruments, plugged filter, failed pump, or failed meter resulting in possible loss of production.

- see pages 7,8

Item 4 Modicon failure for BUSS supply line interlocks due to power failure or hardware problems resulting in possible loss of production.

- see page 9

Item 5 Improper maintenance of pump and filter in BUSS supply line to the reactors resulting in possible personnel exposure.

- see page 10

Item 6 Improper maintenance of BUSS injection nozzles resulting in loss of production, contamination, or personnel exposure.

- see page 11

III-C and beyond

VAB.0001089224

A

SUMMARY OF PAGE 1: I-A

CRITICAL IDENTIFIED HAZARDS

VISTA TC COMPLIANCE PROJECT
CRITICAL RANK: 1, CRITICAL - MUST BE IMPROVED I = MAJOR CONSEQUENCE A = FREQUENT OCCURRENCE
DEVIATION: N-O-N-E F-O-U-N-D
EQUIPMENT NUMBER:
EQUIPMENT DESCRIPTION:
CAUSE:
CONSEQUENCE:
SUGGESTED MITIGATION:
RESOLUTION:
COMMENTS:

SUMMARY OF
CRITICAL IDENTIFIED HAZARDS

VISTA TC COMPLIANCE PROJECT
CRITICAL RANK: 1, CRITICAL - MUST BE IMPROVED I = MAJOR CONSEQUENCE B = PROBABLE OCCURRENCE
DEVIATION: STATIC CHARGE
EQUIPMENT NUMBER: HM-101/102-E-A13-1
EQUIPMENT DESCRIPTION: BUS FROM DRUM TO TK-021
CAUSE: FAILURE TO GROUND DRUM/LINE
CONSEQUENCE: FIRE EXPLOSION, PERSONNEL INJURY
SUGGESTED MITIGATION: SUGGEST REVIEW OF GROUNDING PROCEDURE AND OTP
RESOLUTION:
COMMENTS:

SUMMARY OF PAGE 1: II-A

CRITICAL IDENTIFIED HAZARDS

VISTA TC COMPLIANCE PROJECT
CRITICAL RANK: 1, CRITICAL - MUST BE IMPROVED II = SEVERE CONSEQUENCE A = FREQUENT OCCURRENCE
DEVIATION: N-O-N-E F-O-U-N-D
EQUIPMENT NUMBER:
EQUIPMENT DESCRIPTION:
CAUSE:
CONSEQUENCE:
SUGGESTED MITIGATION:
RESOLUTION:
COMMENTS:

SUMMARY OF
CRITICAL IDENTIFIED HAZARDS

VISTA TC COMPLIANCE PROJECT
CRITICAL RANK: 2, UNDESIRABLE - SHOULD BE IMPROVED I = MAJOR CONSEQUENCE C = OCCASIONAL OCCURRENCE
DEVIATION: N-O-N-E F-O-U-N-D
EQUIPMENT NUMBER:
EQUIPMENT DESCRIPTION:
CAUSE:
CONSEQUENCE:
SUGGESTED MITIGATION:
RESOLUTION:
COMMENTS:

SUMMARY OF
CRITICAL IDENTIFIED HAZARDS

VISTA TC COMPLIANCE PROJECT
CRITICAL RANK: 2, UNDESIRABLE - SHOULD BE IMPROVED II = SEVERE CONSEQUENCE B = PROBABLE OCCURRENCE
DEVIATION: WRONG DRUM OR MATERIALS
EQUIPMENT NUMBER: BUS DRUM
EQUIPMENT DESCRIPTION: 55 GAL DRUM
CAUSE: MIX UP IN WAREHOUSE WRONG MATERIAL DELIVERED TO PLANT
CONSEQUENCE: CONTAMINATED BUS TANK, LOST PRODUCTION
SUGGESTED MITIGATION: SUGGEST REVIEW OF DRUM HANDLING PROCEDURES AND MATERIAL ID/CONFIRMATION
RESOLUTION:
COMMENTS:

SUMMARY OF
CRITICAL IDENTIFIED HAZARDS

VISTA TC COMPLIANCE PROJECT
CRITICAL RANK: 2, UNDESIRABLE - SHOULD BE IMPROVED II = SEVERE CONSEQUENCE B = PROBABLE OCCURRENCE
DEVIATION: CATASTROPHIC LINE FAILURE
EQUIPMENT NUMBER: HM-111-120
EQUIPMENT DESCRIPTION: BUS REACTOR INLET LINES
CAUSE: VIBRATION, IMPACT
CONSEQUENCE: EXPOSURE, VCM RELEASE
SUGGESTED MITIGATION: SUGGEST REVIEW OF QTP, SUPPORT DESIGN, MAINT. PROC.
RESOLUTION:
COMMENTS:

SUMMARY OF
CRITICAL IDENTIFIED HAZARDS

VISTA TC COMPLIANCE PROJECT
CRITICAL RANK: 2, UNDESIRABLE - SHOULD BE IMPROVED III = MODERATE CONSEQUENCE A = FREQUENT OCCURRENCE
DEVIATION: INCREASED PRESSURE
EQUIPMENT NUMBER: BUS DRUM
EQUIPMENT DESCRIPTION: 55 GAL DRUM
CAUSE: EXTERNAL HEAT SOURCE
CONSEQUENCE: POSSIBLE PERSONNEL EXPOSURE
SUGGESTED MITIGATION: SUGGEST REVIEW OF DRUM HANDLING PROCEDURE, OTP, AND PPG
RESOLUTION:
COMMENTS:

SUMMARY OF PAGE 2: III-A

CRITICAL IDENTIFIED HAZARDS

VISTA TC COMPLIANCE PROJECT
CRITICAL RANK: 2, UNDESIRABLE - SHOULD BE IMPROVED III = MODERATE CONSEQUENCE A = FREQUENT OCCURRENCE
DEVIATION: INCREASED TEMPERATURE
EQUIPMENT NUMBER: BUS DRUM
EQUIPMENT DESCRIPTION: 55 GAL DRUM
CAUSE: SEE INCREASED PRESSURE
CONSEQUENCE:
SUGGESTED MITIGATION:
RESOLUTION:
COMMENTS:

SUMMARY OF
CRITICAL IDENTIFIED HAZARDS

VISTA TC COMPLIANCE PROJECT
CRITICAL RANK: 2, UNDESIRABLE - SHOULD BE IMPROVED III = MODERATE CONSEQUENCE A = FREQUENT OCCURRENCE
DEVIATION: NO FLOW
EQUIPMENT NUMBER: HM-101/102-E-A13-1
EQUIPMENT DESCRIPTION: BUS FROM DRUM TO TK-021
CAUSE: VALVE CLOSED FILTER PLUG PUMP FAILURE DRUM EMPTY LINE PLUG
CONSEQUENCE: LOSS OF FLOW POSSIBLE LEAKAGE AND PERSONNEL EXPOSURE
SUGGESTED MITIGATION: SUGGEST REVIEW OF OTP, SUGGEST PRESSURE GAGES EITHER SIDE OF FL-045 NOTE: PG'S ADDED TO PI&D
RESOLUTION:
COMMENTS:

VISTA TC COMPLIANCE PROJECT
CRITICAL RANK: 2, UNDESIRABLE - SHOULD BE IMPROVED III = MODERATE CONSEQUENCE A = FREQUENT OCCURRENCE
DEVIATION: INCREASED PRESSURES
EQUIPMENT NUMBER: HM-101/102-E-A13-1
EQUIPMENT DESCRIPTION: BUS FROM DRUM TO TK-021
CAUSE: SEE NO FLOW
CONSEQUENCE:
SUGGESTED MITIGATION:
RESOLUTION:
COMMENTS:

SUMMARY OF
CRITICAL IDENTIFIED HAZARDS

VISTA TC COMPLIANCE PROJECT
CRITICAL RANK: 2, UNDESIRABLE - SHOULD BE IMPROVED III = MODERATE CONSEQUENCE A = FREQUENT OCCURRENCE
DEVIATION: REDUCED FLOW
EQUIPMENT NUMBER: HM-101/102-E-A13-1
EQUIPMENT DESCRIPTION: BUS FROM DRUM TO TK-021
CAUSE: SEE NO FLOW FILTER DRAIN OPEN
CONSEQUENCE: SEE NO FLOW
SUGGESTED MITIGATION:
RESOLUTION:
COMMENTS:

SUMMARY OF
CRITICAL IDENTIFIED HAZARDS

VISTA TC COMPLIANCE PROJECT
CRITICAL RANK: 2, UNDESIRABLE - SHOULD BE IMPROVED III = MODERATE CONSEQUENCE A = FREQUENT OCCURRENCE
DEVIATION: REDUCED PRESSURE
EQUIPMENT NUMBER: HM-101/102-E-A13-1
EQUIPMENT DESCRIPTION: BUS FROM DRUM TO TK-021
CAUSE: SEE NO FLOW
CONSEQUENCE:
SUGGESTED MITIGATION:
RESOLUTION:
COMMENTS:

SUMMARY OF
CRITICAL IDENTIFIED HAZARDS

VISTA TC COMPLIANCE PROJECT	
CRITICAL RANK:	2, UNDESIRABLE - SHOULD BE IMPROVED III = MODERATE CONSEQUENCE A = FREQUENT OCCURRENCE
DEVIATION:	NO FLOW
EQUIPMENT NUMBER:	HM-104/105/106/107-8
EQUIPMENT DESCRIPTION:	PP-143/44 TO REACTOR AREA
CAUSE:	BLOCKED LINE PUMP FAILURE METER FAILURE INSTRUMENT FAILURE PLUGGED FILTER
CONSEQUENCE:	LOSS OF PRODUCTION
SUGGESTED MITIGATION:	SUGGEST REVIEW OF OTP
RESOLUTION:	
COMMENTS:	

SUMMARY OF
CRITICAL IDENTIFIED HAZARDS

VISTA TC COMPLIANCE PROJECT
CRITICAL RANK: 2, UNDESIRABLE - SHOULD BE IMPROVED III = MODERATE CONSEQUENCE A = FREQUENT OCCURRENCE
DEVIATION: REDUCED FLOW
EQUIPMENT NUMBER: HM-104/105/106/107-8
EQUIPMENT DESCRIPTION: PP-143/44 TO REACTOR AREA
CAUSE: SEE NO-FLOW, OPEN BLEEDERS
CONSEQUENCE: SEE NO-FLOW
SUGGESTED MITIGATION:
RESOLUTION:
COMMENTS:

VISTA TC COMPLIANCE PROJECT	
CRITICAL RANK:	2, UNDESIRABLE - SHOULD BE IMPROVED III = MODERATE CONSEQUENCE A = FREQUENT OCCURRENCE
DEVIATION:	MODICON FAILURE
EQUIPMENT NUMBER:	HM-104/105/106/107-8
EQUIPMENT DESCRIPTION:	PP-143/44 TO REACTOR AREA
CAUSE:	LOSS OF POWER HARDWARE PROBLEMS (I/O, CPU, ETC.)
CONSEQUENCE:	LOST PRODUCTION
SUGGESTED MITIGATION:	SUGGEST REVIEW OF RESPONSE PROCEDURES AND VERIFY PERIODIC UPS CHECKS
RESOLUTION:	
COMMENTS:	

VAB.0001089239

SUMMARY OF
CRITICAL IDENTIFIED HAZARDS

VISTA TC COMPLIANCE PROJECT	
CRITICAL RANK:	2, UNDESIRABLE - SHOULD BE IMPROVED III = MODERATE CONSEQUENCE A = FREQUENT OCCURRENCE
DEVIATION:	MAINTENANCE
EQUIPMENT NUMBER:	HM-104/105/106/107-8
EQUIPMENT DESCRIPTION:	PP-143/44 TO REACTOR AREA
CAUSE:	PUMP FILTER
CONSEQUENCE:	POSSIBLE PERSONNEL EXPOSURE
SUGGESTED MITIGATION:	SUGGEST REVIEW OF MAINTENANCE PREP. PARTS STOCKING PPG
RESOLUTION:	
COMMENTS:	

VISTA TC COMPLIANCE PROJECT	
CRITICAL RANK:	2, UNDESIRABLE - SHOULD BE IMPROVED III = MODERATE CONSEQUENCE A = FREQUENT OCCURRENCE
DEVIATION:	MAINTENANCE
EQUIPMENT NUMBER:	HM-111-120
EQUIPMENT DESCRIPTION:	BUS REACTOR INLET LINES
CAUSE:	PLUGGED NOZZLE
CONSEQUENCE:	PRODUCTION LOSS CONTAMINATION PERSONNEL EXPOSURE
SUGGESTED MITIGATION:	SUGGEST REVIEW OF OTP, MAINTENANCE PROCEDURES
RESOLUTION:	
COMMENTS:	

SUMMARY OF
CRITICAL IDENTIFIED HAZARDS

PAGE 1: II-C

VISTA TC COMPLIANCE PROJECT
CRITICAL RANK: 3, ACCEPTABLE - WITH CONTROLS II = SEVERE CONSEQUENCE C = OCCASIONAL OCCURRENCE
DEVIATION: N-O-N-E F-O-U-N-D
EQUIPMENT NUMBER:
EQUIPMENT DESCRIPTION:
CAUSE:
CONSEQUENCE:
SUGGESTED MITIGATION:
RESOLUTION:
COMMENTS:

SUMMARY OF
CRITICAL IDENTIFIED HAZARDS

VISTA TC COMPLIANCE PROJECT
CRITICAL RANK: 3, ACCEPTABLE - WITH CONTROLS III = MODERATE CONSEQUENCE B = PROBABLE OCCURRENCE
DEVIATION: REDUCED TEMPERATURE
EQUIPMENT NUMBER: HM-111-120
EQUIPMENT DESCRIPTION: BUS REACTOR INLET LINES
CAUSE: HEAT TRACE FAILURE
CONSEQUENCE: NOZZLE PLUG. POOR BUS COATING
SUGGESTED MITIGATION: SUGGEST REVIEW OF WINTERIZATION PROCEDURES AND OTP
RESOLUTION:
COMMENTS:

SUMMARY OF
CRITICAL IDENTIFIED HAZARDS

VISTA TC COMPLIANCE PROJECT	
CRITICAL RANK:	3, ACCEPTABLE - WITH CONTROLS III = MODERATE CONSEQUENCE B = PROBABLE OCCURRENCE
DEVIATION:	FILTERS (300, 400) OMITTED
EQUIPMENT NUMBER:	WX-130/139-E-A13-1
EQUIPMENT DESCRIPTION:	WATER FLUSH LINE
CAUSE:	CARBON STEEL LINE
CONSEQUENCE:	CONTAMINATED RESIN, PLUGGED NOZZLE
SUGGESTED MITIGATION:	REVIEW THAT ALL CS LINES HAVE FILTERS
RESOLUTION:	
COMMENTS:	

SUMMARY OF
CRITICAL IDENTIFIED HAZARDS

VISTA TC COMPLIANCE PROJECT	
CRITICAL RANK:	3, ACCEPTABLE - WITH CONTROLS III = MODERATE CONSEQUENCE B = PROBABLE OCCURRENCE
DEVIATION:	NO FLOW
EQUIPMENT NUMBER:	SM-139/148-H-A13
EQUIPMENT DESCRIPTION:	STEAM LINES
CAUSE:	CLOSED GLOBE VALVE PLUGGED LINE UTILITY FAILURE
CONSEQUENCE:	IMPROPER BUS INJECTION
SUGGESTED MITIGATION:	
RESOLUTION:	
COMMENTS:	

SUMMARY OF
CRITICAL IDENTIFIED HAZARDS

VISTA TC COMPLIANCE PROJECT
CRITICAL RANK: 3, ACCEPTABLE - WITH CONTROLS III = MODERATE CONSEQUENCE B = PROBABLE OCCURRENCE
DEVIATION: NO FLOW
EQUIPMENT NUMBER: WC-100/109
EQUIPMENT DESCRIPTION: CWS TO MIDDLE OF JACKET
CAUSE: CLOSED VALVE COOLING WATER OFF PLUGGED LINE
CONSEQUENCE: POSSIBLE BUILD-UP AND CONTAMINATION, PRODUCTION LOSS
SUGGESTED MITIGATION: SUGGEST REVIEW OF VALVE LOCKING PROCEDURE
RESOLUTION:
COMMENTS:

SUMMARY OF
CRITICAL IDENTIFIED HAZARDS

VISTA TC COMPLIANCE PROJECT	
CRITICAL RANK:	3, ACCEPTABLE - WITH CONTROLS III = MODERATE CONSEQUENCE B = PROBABLE OCCURRENCE
DEVIATION:	INCREASE FLOW
EQUIPMENT NUMBER:	WC-100/100
EQUIPMENT DESCRIPTION:	CWS TO MIDDLE OF JACKET
CAUSE:	OPEN GLOBE VALVE
CONSEQUENCE:	LONG HEAT-UP TIME TEMPERATURE CONTROL PROBLEMS CW CAP. PROBLEMS
SUGGESTED MITIGATION:	
RESOLUTION:	
COMMENTS:	

A

TK-021

DIAMETER: 3'-2"
LENGTH: 4'-0"
OVERALL HEIGHT: 8'-6"
DESIGN PRESSURE: 5" H O
M.O.C. 304S.S.
VOLUME: 225GAL.

PP-145

FLOW: 10GPM
ΔPRESS: 7.5PSI
TYPE: DRUM
M.O.C: 316SS

PP-143/144

FLOW: 1.2GPM
ΔPRESS: 100PSI
TYPE: GEAR
M.O.C: 316SS
HP: 1/3

FL-045

FLOW: 10GPM
200 MESH BASKET
M.O.C: 316SS

FL-046/047

FILTER CARTRIDGE TYPE
FLOW: 5GPM
10 MICRON
MAX OPERATING
PRESSURE 150 PSI
@ 250 °F
M.O.C: 316SS

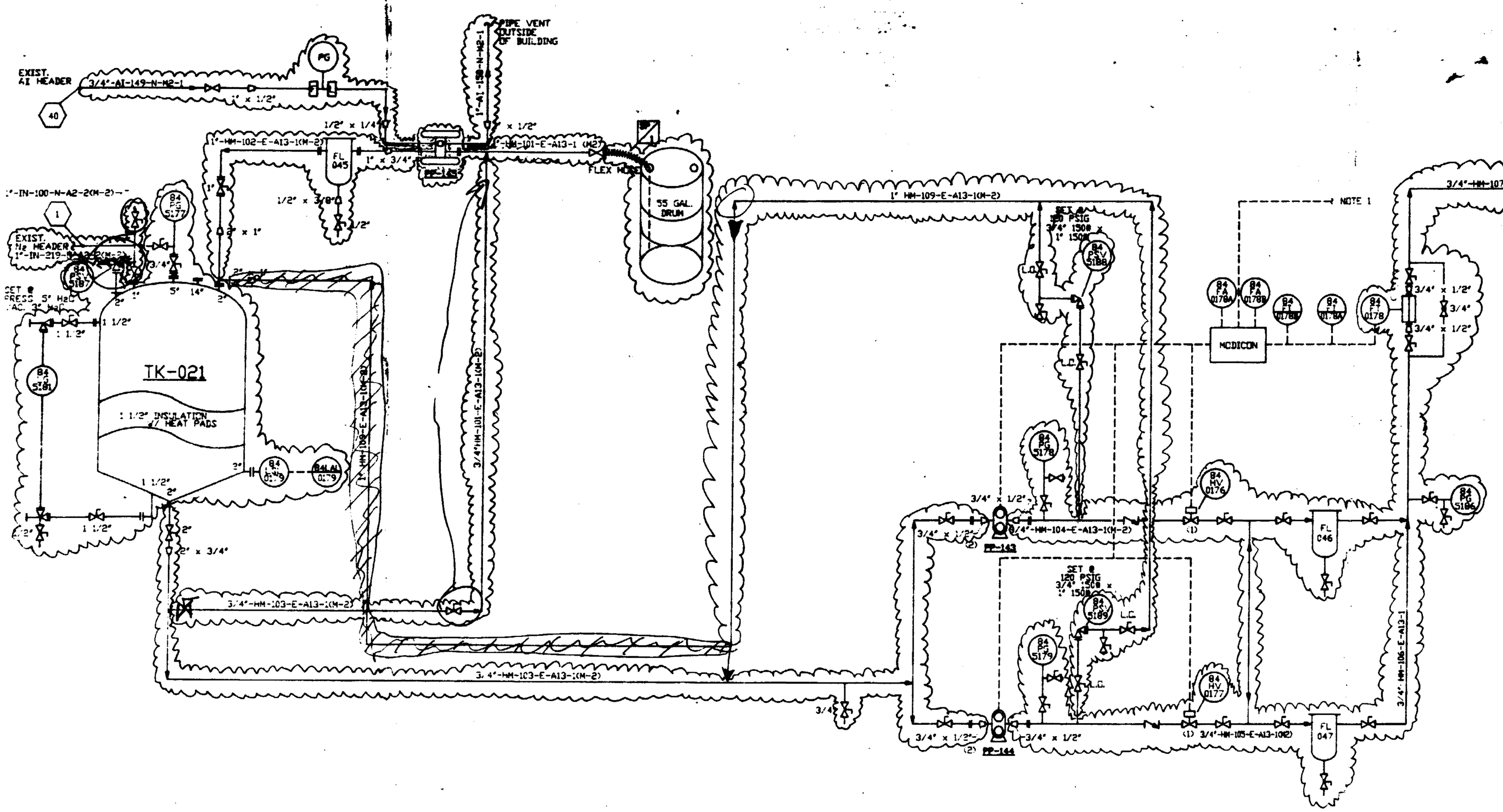

NOTES

1. TO THE BUS 80, STEAM, FLUSH WATER, AND RX BLOCK VALVES ON EACH RX.

FOR PLANT APPROVAL
BY _____ DATE _____
JUN 22 1990

APD: 09-G61C PROJ.#: VP-09-107-984

ISU	DATE	DESCRIPTION	DRN.	CHK.	APPD
1	06/19/90	REVISED FOR APPROVAL	JAJ		
A	05/22/90	FOR PLANT APPROVAL	JAJ		

VISTA Vista Chemical Company
GENERAL ENGINEERING
HOUSTON, TEXAS

SECTION: ABREDEEN SUB-SECT: PVC PLANT

P & I DIAGRAM
BUS 80 STORAGE TANK & PUMPS
REACTOR CLEAN-WALL PROJECT

APPD DATE | SCALE: NONE | SHEET NO.

NO. MS-003668-PI-D | ISSUE: 3

02/04/90 JMC
DATE STARTED | DRAWN BY | CHKD BY

VAB.0001089248

A

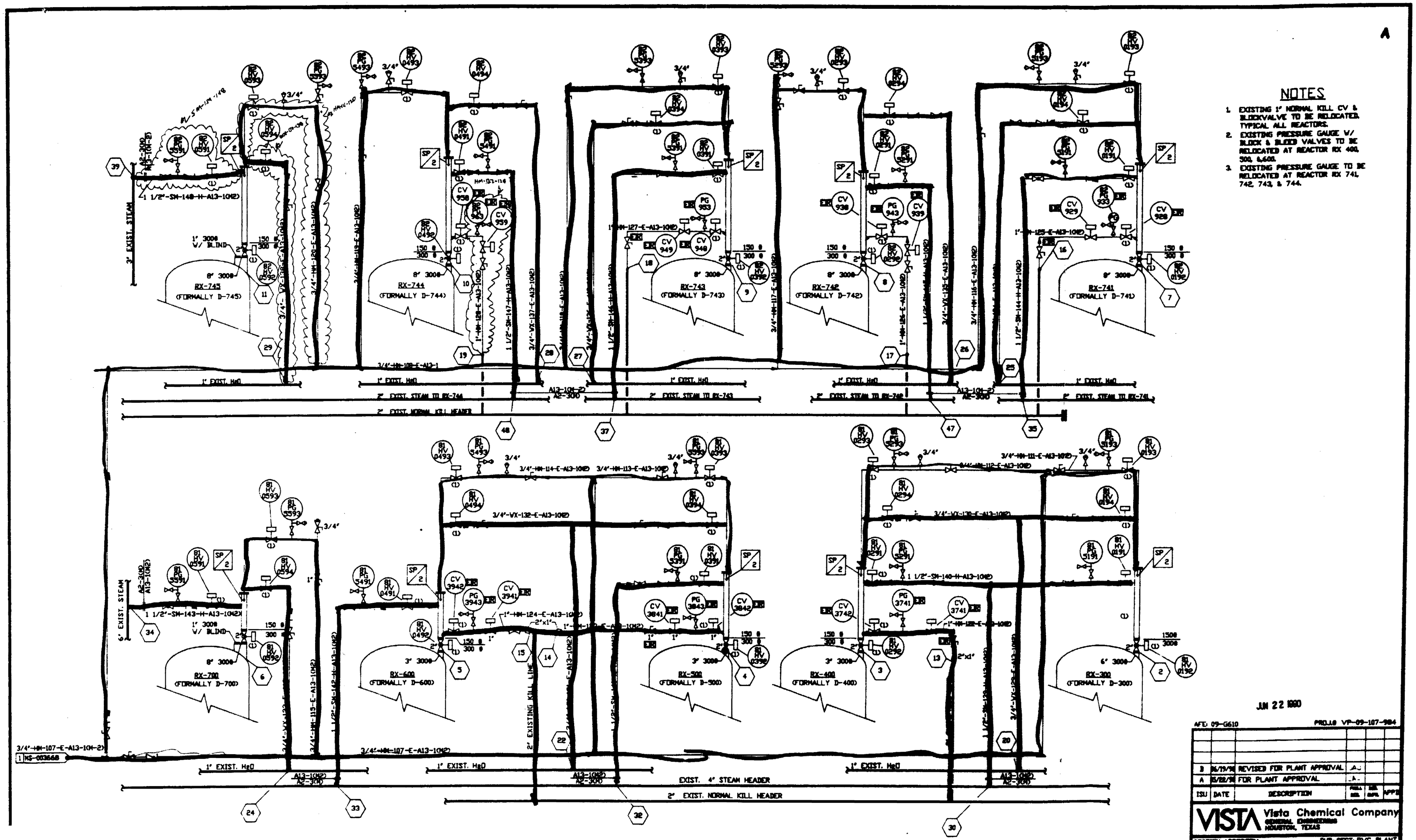

NOTES

1. EXISTING 1" NORMAL KILL CV & BLOCKVALVE TO BE RELOCATED. TYPICAL ALL REACTORS.
2. EXISTING PRESSURE GAUGE W/ BLOCK & BLEED VALVES TO BE RELOCATED AT REACTOR RX 400, 500, & 600.
3. EXISTING PRESSURE GAUGE TO BE RELOCATED AT REACTOR RX 741, 742, 743, & 744.

JUN 22 1990

AFE: 09-G610 PROJ.# VP-09-107-984

ISU	DATE	DESCRIPTION	PROJ. ENGR.	DES. ENGR.	APP'D
B	06/19/90	REVISED FOR PLANT APPROVAL			
A	05/22/90	FOR PLANT APPROVAL			

VISTA Vista Chemical Company
GENERAL CHEMICALS
HOUSTON, TEXAS

SECTION: ABERDEEN SUB-SECT: PVC PLANT

P & I DIAGRAM

BUS 80 INJECTION SYSTEM OLD & NEW MODULES
REACTOR CLEAN-WALL PROJECT

APP'D DATE: SCALE: NONE SHEET NO.

NO. MS-003669-PI-D ISSUE B

06/04/90 JMC

VAB.0001089249

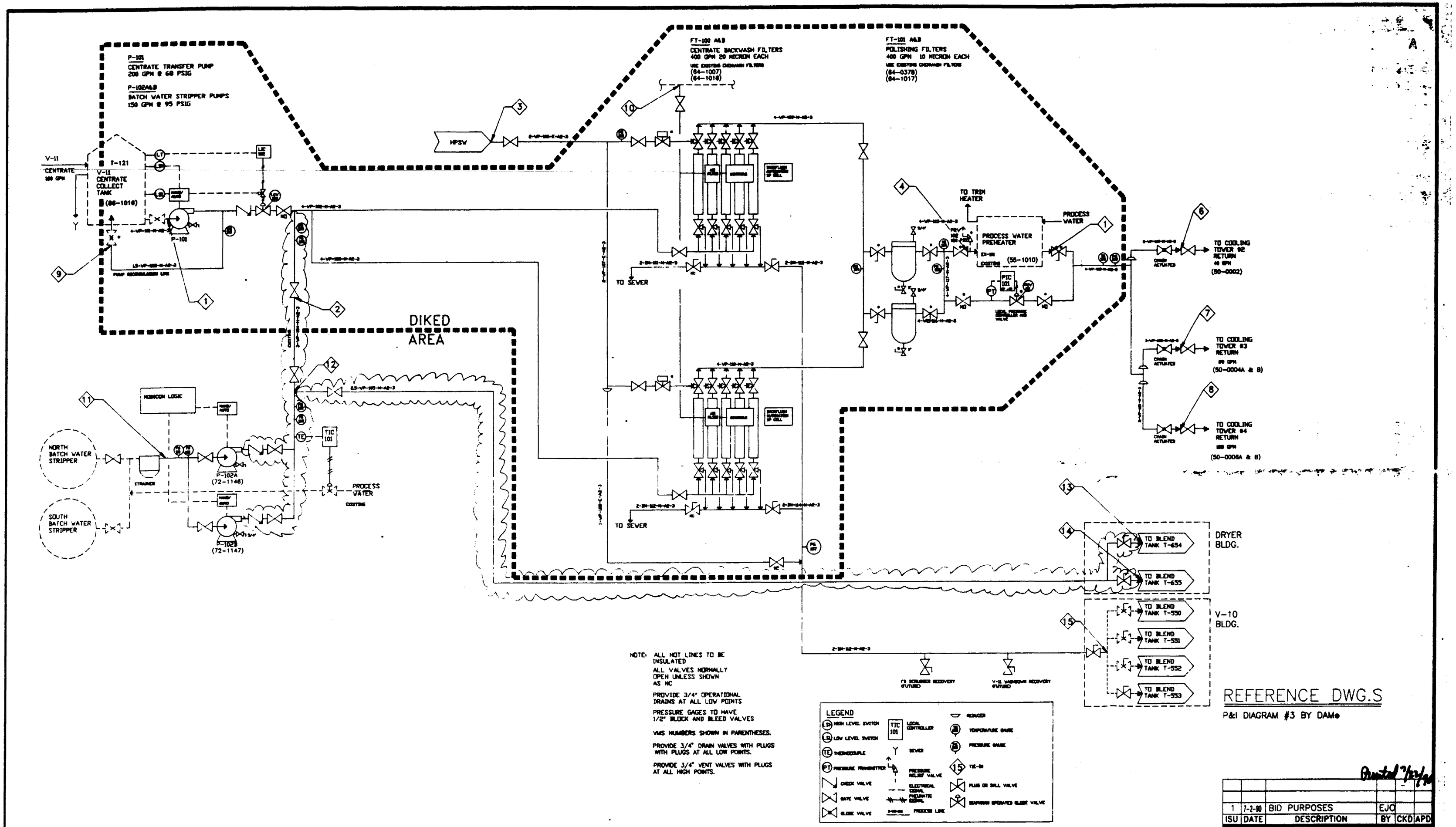

NOTE: ALL HOT LINES TO BE INSULATED
ALL VALVES NORMALLY OPEN UNLESS SHOWN AS NC

PROVIDE 3/4" OPERATIONAL DRAINS AT ALL LOW POINTS

PRESSURE GAGES TO HAVE 1/2" BLOCK AND BLEED VALVES

VMS NUMBERS SHOWN IN PARENTHESES.

PROVIDE 3/4" DRAIN VALVES WITH PLUGS WITH PLUGS AT ALL LOW POINTS.

PROVIDE 3/4" VENT VALVES WITH PLUGS AT ALL HIGH POINTS.

REFERENCE DWG.S

P&I DIAGRAM #3 BY DAMe

Printed 7/27/90

ISU	DATE	DESCRIPTION	BY	CKD	APD
1	7-2-90	BID PURPOSES	EJO		

VISTA — VISTA POLYMERS, INC
ABERDEEN, MS

AFE:G839 — V-11 CENTRATE

P&I DIAGRAM

TC COMPLIANCE PROJ.

APPD: DATE:	SCALE NONE	UNIT	AREA
NO. DWG.7			ISSUE

MS-004623-PI-D

E	DESCRIPTION	APP'D	REV.	BY	DATE	DESCRIPTION	APP'D	REV	BY	DATE	DESCRIPTION	APP'D

VAB.00010892250

VISTA

Calculation Sheet

To

From

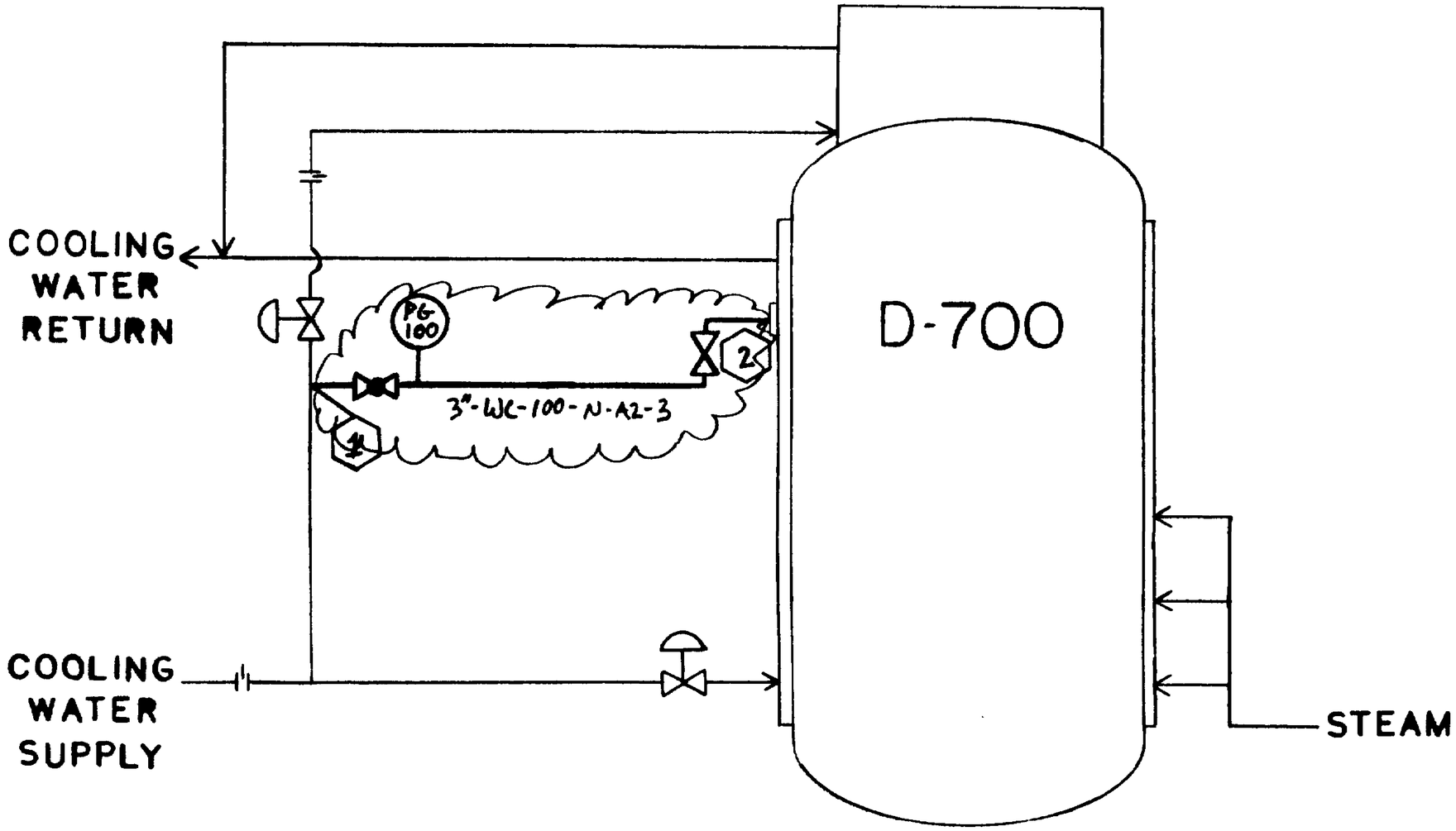

Notes:

- Pressure gage range 0 to 60 psig
- Globe valve should be chain locked in position
- Distance between tie-in # 2 and gate valve to be minimized
- Gate valve mounted in vertide position

Job No.

Title

Made By

Date

Page of

V3-20G-S

VAB.0001089251

VISTA CHEMICAL COMPANY (TC COMPLIANCE HAZOP)

HAZOP Study Data Report

(Without Grouping)

Risk Code	Criticality & Frequency	Equip ID Equipment Description	P&ID	Deviation Description	Caused By: Consequences:	Action Item Request Action Item Response
	-	BUS DRUM 55 GAL DRUM	P&ID: MS033668	NO FLOW	CAUSE: NAP CONSEQ:	ACT:
	-	BUS DRUM 55 GAL DRUM	P&ID: MS033668	REVERSE FLOW	CAUSE: NAP CONSEQ:	ACT:
	-	BUS DRUM 55 GAL DRUM	P&ID: MS033668	INCREASED FLOW	CAUSE: NAP CONSEQ:	ACT:
2	III - A	BUS DRUM 55 GAL DRUM	P&ID: MS033668	INCREASED PRESSURE	CAUSE: EXTERNAL HEAT SOURCE CONSEQ: POSSIBLE PERSONNEL EXPOSURE	ACT: SRO DRUM HANDLING PROCEDURE, OPERATOR TRAINING, AND PPG
2	III - A	BUS DRUM 55 GAL DRUM	P&ID: MS033668	INCREASED TEMPERATURE	CAUSE: SEE INCREASED PRESSURE CONSEQ:	ACT:
	-	BUS DRUM 55 GAL DRUM	P&ID: MS033668	REDUCED FLOW	CAUSE: NAP CONSEQ:	ACT:
	-	BUS DRUM 55 GAL DRUM	P&ID: MS033668	REDUCED PRESSURE	CAUSE: NAP CONSEQ:	ACT:
4	IV - B	BUS DRUM 55 GAL DRUM	P&ID: MS033668	REDUCED TEMPERATURE	CAUSE: WINTER EXPOSURE CONSEQ: FREEZE/CONGEAL	ACT: SRO DRUM HANDLING PROCEDURES AND OTP
2	II - B	BUS DRUM 55 GAL DRUM	P&ID: MS033668	WRONG DRUM OR MATERIALS	CAUSE: MIX UP IN WAREHOUSE WRONG MATERIAL DELIVERED TO PLANT CONSEQ: CONTAMINATE BUS TANK, LOSSED PRODUCTION	ACT: SRO DRUM HANDLING PROCEDURES AND MATERIAL ID/CONFIRMATION
	-	BUS DRUM 55 GAL DRUM	P&ID: MS033668	DRUM DAMAGE IN TRANSIT	CAUSE: FORK LIFT ERROR CONSEQ: SPILLAGE, EXPOSURE	ACT: SRO DRUM HANDLING PROCEDURE, PPG, AND ENVIROMENTAL IMPACT JAW=>
4	IV - A	BUS DRUM 55 GAL DRUM	P&ID: MS033668	EXPOSURE TO AIR	CAUSE: CAP LEFT OFF FOR LONG PERIOD OF TIME CONSEQ: CONGEALS, ETOH RELEASE	ACT: SRO DRUM HANDLING PROCEDURE AND OTP

VISTA CHEMICAL COMPANY (TC COMPLIANCE HAZOP)

HAZOP Study Data Report

(Without Grouping)

Risk Code	Criticality & Frequency	Equip ID Equipment Description	P&ID	Deviation Description	Caused By: Consequences:	Action Item Request Action Item Response
2	III - A	HM-101/102-E-A13-1 BUS FROM DRUM TO TK-021	P&ID: MS003668	NO FLOW	CAUSE: VALVE CLOSED FILTER PLUG PUMP FAILURE DRUM EMPTY LINE PLUG CONSEQ: LOSS OF FLOW POSSIBLE LEAKAGE AND PERSONNEL EXPOSURE	ACT: SRO OTP SUGG. PRESSURE GAUGES EITHER SIDE OF FL-045 NOTE: PG'S ADDED TO PI&D
-		HM-101/102-E-A13-1 BUS FROM DRUM TO TK-021	P&ID: MS003668	REVERSE FLOW	CAUSE: NAP CONSEQ:	ACT:
-		HM-101/102-E-A13-1 BUS FROM DRUM TO TK-021	P&ID: MS003668	INCREASED FLOW	CAUSE: NAP CONSEQ:	ACT:
2	III - A	HM-101/102-E-A13-1 BUS FROM DRUM TO TK-021	P&ID: MS003668	INCREASED PRESSURE	CAUSE: SEE NO FLOW CONSEQ:	ACT:
-		HM-101/102-E-A13-1 BUS FROM DRUM TO TK-021	P&ID: MS003668	INCREASED TEMPERATURE	CAUSE: NAP CONSEQ:	ACT:
2	III - A	HM-101/102-E-A13-1 BUS FROM DRUM TO TK-021	P&ID: MS003668	REDUCED FLOW	CAUSE: SEE NO FLOW FILTER DRAIN OPEN CONSEQ: SEE NO FLOW	ACT:
2	III - A	HM-101/102-E-A13-1 BUS FROM DRUM TO TK-021	P&ID: MS003668	REDUCED PRESSURE	CAUSE: SEE NO FLOW CONSEQ:	ACT:
-		HM-101/102-E-A13-1 BUS FROM DRUM TO TK-021	P&ID: MS003668	REDUCED TEMPERATURE	CAUSE: NAP CONSEQ:	ACT:
-		HM-101/102-E-A13-1 BUS FROM DRUM TO TK-021	P&ID: MS003668	DIAPHRAGM FAILURE	CAUSE: INCOMPATABILITY CONSEQ: PUMP FAILURE POSSIBLE PERSONNEL EXPOSURE	ACT: CONFIRM COMPATABILITY JAW=>
1	I - B	HM-101/102-E-A13-1 BUS FROM DRUM TO TK-021	P&ID: MS003668	STATIC CHARGE	CAUSE: FAILURE TO GROUND DRUM/LINE CONSEQ: FIRE EXPLOSION	ACT: SRO GROUNDING PROCEDURE AND OTP

VISTA CHEMICAL COMPANY (TC COMPLIANCE HAZOP)

HAZOP Study Data Report

(Without Grouping)

Risk Code	Criticality & Frequency	Equip ID Equipment Description	P&ID	Deviation Description	Caused By: Consequences:	Action Item Request Action Item Response
	-	AI-149/150-N-M2-1 UTILITY AIR LINES	P&ID: MS003668	NO FLOW	CAUSE: NAP CONSEQ:	ACT: THIS LINE REPRESENTS MINOR OPERABILITY PROBLEMS ONLY
	-	AI-149/150-N-M2-1 UTILITY AIR LINES	P&ID: MS003668	REVERSE FLOW	CAUSE: NAP CONSEQ:	ACT:
	-	AI-149/150-N-M2-1 UTILITY AIR LINES	P&ID: MS003668	INCREASED FLOW	CAUSE: NAP CONSEQ:	ACT:
	-	AI-149/150-N-M2-1 UTILITY AIR LINES	P&ID: MS003668	INCREASED PRESSURE	CAUSE: NAP CONSEQ:	ACT:
	-	AI-149/150-N-M2-1 UTILITY AIR LINES	P&ID: MS003668	INCREASED TEMPERATURE	CAUSE: NAP CONSEQ:	ACT:
	-	AI-149/150-N-M2-1 UTILITY AIR LINES	P&ID: MS003668	REDUCED FLOW	CAUSE: NAP CONSEQ:	ACT:
	-	AI-149/150-N-M2-1 UTILITY AIR LINES	P&ID: MS003668	REDUCED PRESSURE	CAUSE: NAP CONSEQ:	ACT:
	-	AI-149/150-N-M2-1 UTILITY AIR LINES	P&ID: MS003668	REDUCED TEMPERATURE	CAUSE: NAP CONSEQ:	ACT:
4	IV - B	IN-219-N-A2-2(M2-2) NITROGEN SUPPLY TO TANK	P&ID: MS003668	NO FLOW	CAUSE: BOTTLE EMPTY VALVE CLOSED CONSEQ: NO BLANKET - LONG TERM DEGRADATION TO BUS	ACT: NONE REQUIRED
	-	IN-219-N-A2-2(M2-2) NITROGEN SUPPLY TO TANK	P&ID: MS003668	REVERSE FLOW	CAUSE: IMP CONSEQ:	ACT:
4	IV - B	IN-219-N-A2-2(M2-2) NITROGEN SUPPLY TO TANK	P&ID: MS003668	INCREASED FLOW	CAUSE: REGULATOR FAILURE CONSEQ: RELIEF	ACT: NONE REQUIRED

VISTA CHEMICAL COMPANY (TC COMPLIANCE HAZOP)

HAZOP Study Data Report

(Without Grouping)

Risk Code	Criticality & Frequency	Equip ID Equipment Description	P&ID	Deviation Description	Caused By: Consequences:	Action Item Request Action Item Response
	-	IN-219-N-A2-2(M2-2) NITROGEN SUPPLY TO TANK	P&ID: MS003668	INCREASED PRESSURE	CAUSE: NAP CONSEQ:	ACT:
	-	IN-219-N-A2-2(M2-2) NITROGEN SUPPLY TO TANK	P&ID: MS003668	INCREASED TEMPERATURE	CAUSE: NAP CONSEQ:	ACT:
	-	IN-219-N-A2-2(M2-2) NITROGEN SUPPLY TO TANK	P&ID: MS003668	REDUCED FLOW	CAUSE: NAP CONSEQ:	ACT:
	-	IN-219-N-A2-2(M2-2) NITROGEN SUPPLY TO TANK	P&ID: MS003668	REDUCED PRESSURE	CAUSE: NAP CONSEQ:	ACT:
	-	IN-219-N-A2-2(M2-2) NITROGEN SUPPLY TO TANK	P&ID: MS003668	REDUCED TEMPERATURE	CAUSE: NAP CONSEQ:	ACT:
4	IV - B	HM-101-E-A13-1 RECIRCULATION LINE	P&ID: MS003668	NO FLOW	CAUSE: PLUGGED LINE CLOSED VALVE CONSEQ: OPERATIONS PROBLEM	ACT: NONE REQUIRED
	-	HM-101-E-A13-1 RECIRCULATION LINE	P&ID: MS003668	REVERSE FLOW	CAUSE: NAP CONSEQ:	ACT:
	-	HM-101-E-A13-1 RECIRCULATION LINE	P&ID: MS003668	INCREASED FLOW	CAUSE: NAP CONSEQ:	ACT:
	-	HM-101-E-A13-1 RECIRCULATION LINE	P&ID: MS003668	INCREASED PRESSURE	CAUSE: NAP CONSEQ:	ACT:
	-	HM-101-E-A13-1 RECIRCULATION LINE	P&ID: MS003668	INCREASED TEMPERATURE	CAUSE: NAP CONSEQ:	ACT:
	-	HM-101-E-A13-1 RECIRCULATION LINE	P&ID: MS003668	REDUCED FLOW	CAUSE: NAP CONSEQ:	ACT:
	-	HM-101-E-A13-1 RECIRCULATION LINE	P&ID: MS003668	REDUCED PRESSURE	CAUSE: NAP	ACT:

VISTA CHEMICAL COMPANY (TC COMPLIANCE HAZOP)

HAZOP Study Data Report

(Without Grouping)

Risk Code	Criticality & Frequency	Equip ID Equipment Description	P&ID	Deviation Description	Caused By: Consequences:	Action Item Request Action Item Response
	-	HM-101-E-A13-1 RECIRCULATION LINE	P&ID: MS003668	REDUCED TEMPERATURE	CAUSE: NAP CONSEQ:	ACT:
4	IV - A	HM-103-E-A13-1(M2-1) PUMPS PP-143/144 SUCTION	P&ID: MS003668	NO FLOW	CAUSE: VALVE CLOSED LINE PLUGGED PUMP FAILURE EMPTY TANK CONSEQ: LOSS OF FLOW REACTOR SEQ. SHUTS DOWN	ACT: NONE REQUIRED
	-	HM-103-E-A13-1(M2-1) PUMPS PP-143/144 SUCTION	P&ID: MS003668	REVERSE FLOW	CAUSE: NAP CONSEQ:	ACT:
4	IV - D	HM-103-E-A13-1(M2-1) PUMPS PP-143/144 SUCTION	P&ID: MS003668	INCREASED FLOW	CAUSE: LINE BREAKAGE CONSEQ: LOSS OF TK-021 CONTENTS PRODUCTION LOSS	ACT: NONE REQUIRED
	-	HM-103-E-A13-1(M2-1) PUMPS PP-143/144 SUCTION	P&ID: MS003668	INCREASED PRESSURE	CAUSE: NAP CONSEQ:	ACT:
	-	HM-103-E-A13-1(M2-1) PUMPS PP-143/144 SUCTION	P&ID: MS003668	INCREASED TEMPERATURE	CAUSE: NAP CONSEQ:	ACT:
4	IV - A	HM-103-E-A13-1(M2-1) PUMPS PP-143/144 SUCTION	P&ID: MS003668	REDUCED FLOW	CAUSE: SEE LOSS OF FLOW CONSEQ:	ACT:
	-	HM-103-E-A13-1(M2-1) PUMPS PP-143/144 SUCTION	P&ID: MS003668	REDUCED PRESSURE	CAUSE: NAP CONSEQ:	ACT:
	-	HM-103-E-A13-1(M2-1) PUMPS PP-143/144 SUCTION	P&ID: MS003668	REDUCED TEMPERATURE	CAUSE: NAP CONSEQ:	ACT:
2	III - A	HM-104/105/106/107-8 PP-143/44 TO REACTOR AREA	P&ID: MS003668	NO FLOW	CAUSE: BLOCKED LINE PUMP METER INSTRUMENT FAILURE PLUGGED FILTER CONSEQ: LOSS OF PRODUCTION	ACT: SRO OTP

VISTA CHEMICAL COMPANY (TC COMPLIANCE HAZOP)

HAZOP Study Data Report

(Without Grouping)

Risk Code	Criticality & Frequency	Equip ID Equipment Description	P&ID	Deviation Description	Caused By: Consequences:	Action Item Request Action Item Response
	-	HM-104/105/106/107-8 PP-143/44 TO REACTOR AREA	P&ID: MS003668	REVERSE FLOW	CAUSE: NAP CONSEQ:	ACT:
	-	HM-104/105/106/107-8 PP-143/44 TO REACTOR AREA	P&ID: MS003668	INCREASED FLOW	CAUSE: NAP CONSEQ:	ACT:
	-	HM-104/105/106/107-8 PP-143/44 TO REACTOR AREA	P&ID: MS003668	INCREASED PRESSURE	CAUSE: NAP CONSEQ:	ACT:
	-	HM-104/105/106/107-8 PP-143/44 TO REACTOR AREA	P&ID: MS003668	INCREASED TEMPERATURE	CAUSE: NAP CONSEQ:	ACT:
2	III - A	HM-104/105/106/107-8 PP-143/44 TO REACTOR AREA	P&ID: MS003668	REDUCED FLOW	CAUSE: SEE NO-FLOW, OPEN BLEEDERS CONSEQ: SEE NO-FLOW	ACT:
	-	HM-104/105/106/107-8 PP-143/44 TO REACTOR AREA	P&ID: MS003668	REDUCED PRESSURE	CAUSE: NAP CONSEQ:	ACT:
	-	HM-104/105/106/107-8 PP-143/44 TO REACTOR AREA	P&ID: MS003668	REDUCED TEMPERATURE	CAUSE: NAP CONSEQ:	ACT:
2	III - A	HM-104/105/106/107-8 PP-143/44 TO REACTOR AREA	P&ID: MS003668	MODICON FAILURE	CAUSE: LOSS OF POWER HARDWARE PROBLEMS (I/O, CPU, ETC.) CONSEQ: LOST PRODUCTION	ACT: SRO RESPONSE PROCEDURES AND VERIFY PERIODIC UPS CHECKS WCE=>
2	III - A	HM-104/105/106/107-8 PP-143/44 TO REACTOR AREA	P&ID: MS003668	MAINTENANCE	CAUSE: PUMP FILTER CONSEQ: POSSIBLE PERSONNEL EXPOSURE	ACT: SRO MAINTENANCE PREP. PARTS STOCKING PPG
4	IV - A	HM-104/105/106/107-8 PP-143/44 TO REACTOR AREA	P&ID: MS003668	PUMP SEAL FAILURE	CAUSE: OVERHEATING, BEARING FAILURE, IMPROPER FLUSH, COUPLING FAILURE CONSEQ: SEAL LEAK, PUMP FAILURE	ACT: SRO MAINT, SCHEDULING PROCEDURES
4	IV - B	HM109 PUMP RELIEF LINE	P&ID: MS003668	NO FLOW	CAUSE: VALVE BLOCKED, LINE PLUGGED, PSV FAILS CONSEQ: PUMP FAILURE, POSSIBLE EXPOSURE	ACT:

VISTA CHEMICAL COMPANY (TC COMPLIANCE HAZOP)

HAZOP Study Data Report

(Without Grouping)

Risk Code	Criticality & Frequency	Equip ID Equipment Description	P&ID	Deviation Description	Caused By: Consequences:	Action Item Request Action Item Response
	-	HM109 PUMP RELIEF LINE	P&ID: MS003668	REVERSE FLOW	CAUSE: PSV FAIL OPEN CONSEQ: NAP	ACT:
4	IV - B	HM109 PUMP RELIEF LINE	P&ID: MS003668	INCREASED FLOW	CAUSE: PSV FAIL, FLOW WHEN NOT DESIRED CONSEQ: LOSS OF BUS FORWARD FLOW, SYSTEM SEQUENCE SHUTDOWN, EXPOSURE	ACT:
	-	HM109 PUMP RELIEF LINE	P&ID: MS003668	INCREASED PRESSURE	CAUSE: NAP CONSEQ:	ACT:
	-	HM109 PUMP RELIEF LINE	P&ID: MS003668	INCREASED TEMPERATURE	CAUSE: NAP CONSEQ:	ACT:
	-	HM109 PUMP RELIEF LINE	P&ID: MS003668	REDUCED FLOW	CAUSE: NAP CONSEQ:	ACT:
	-	HM109 PUMP RELIEF LINE	P&ID: MS003668	REDUCED PRESSURE	CAUSE: NAP CONSEQ:	ACT:
	-	HM109 PUMP RELIEF LINE	P&ID: MS003668	REDUCED TEMPERATURE	CAUSE: NAP CONSEQ:	ACT:
	-	TK-021 BUS TANK	P&ID: MS003668	NO FLOW	CAUSE: NAP CONSEQ:	ACT:
	-	TK-021 BUS TANK	P&ID: MS003668	REVERSE FLOW	CAUSE: NAP CONSEQ:	ACT:
	-	TK-021 BUS TANK	P&ID: MS003668	INCREASED FLOW	CAUSE: NAP CONSEQ:	ACT:
4	III - C	TK-021 BUS TANK	P&ID: MS003668	INCREASED PRESSURE	CAUSE: CONSERVATION VENT FAIL CONSEQ: TANK FAIL, SPILL, EXPOSURE	ACT: REVIEW FILL PROCEDURE, VERIFY NEED FOR CHECK VALVE IN N2 LINE DEK=>

VISTA CHEMICAL COMPANY (TC COMPLIANCE HAZOP)

HAZOP Study Data Report

(Without Grouping)

Risk Code	Criticality & Frequency	Equip ID Equipment Description	P&ID	Deviation Description	Caused By: Consequences:	Action Item Request Action Item Response
	-	TK-021 BUS TANK	P&ID: MS003668	INCREASED TEMPERATURE	CAUSE: EXTERNAL FIRE CONSEQ: TANK OVERPRESUURE	ACT: CONFIRM VENT SIZED FOR FIRE CASE JAW=>
	-	TK-021 BUS TANK	P&ID: MS003668	REDUCED FLOW	CAUSE: NAP CONSEQ:	ACT:
	-	TK-021 BUS TANK	P&ID: MS003668	REDUCED PRESSURE	CAUSE: LOSS OF N2, CONSERVATION VENT FAIL CONSEQ: IMPROBABLE	ACT:
4	IV - B	TK-021 BUS TANK	P&ID: MS003668	REDUCED TEMPERATURE	CAUSE: LOSS OF HEAT TRACE CONSEQ: BUS FREEZE/CONGEAL	ACT:
4	IV - A	TK-021 BUS TANK	P&ID: MS003668	LEVEL SENSING	CAUSE: SIGHT GLASS DISCOLORED OR PLUGGED, PROBE FAILURE CONSEQ: LOSS OF LEVEL INDICATION OR ALARM	ACT:
4	IV - A	TK-021 BUS TANK	P&ID: MS003668	OVERFILLING	CAUSE: 4 DRUMS DON'T FIT IN TANK CONSEQ: SPILL	ACT: SRO FILLING PROCEDURE JAW=>
	-	HM-111-120 BUS REACTOR INLET LINES	P&ID: MS003669	NO FLOW	CAUSE: PLUGGED NOZZLE, BLOCKED VALVE, PLUGGED LINE CONSEQ: SEQUENCE SHUTDOWN, LOSS OF BUS FLOW, LOST PRODUCTION	ACT: PETE REVIEW PCS=>
	-	HM-111-120 BUS REACTOR INLET LINES	P&ID: MS003669	REVERSE FLOW	CAUSE: IMPROBABLE, THROUGH NOZZLE CONSEQ:	ACT:
	-	HM-111-120 BUS REACTOR INLET LINES	P&ID: MS003669	INCREASED FLOW	CAUSE: NAP CONSEQ:	ACT:
	-	HM-111-120 BUS REACTOR INLET LINES	P&ID: MS003669	INCREASED PRESSURE	CAUSE: SEE OTHER LINES CONSEQ:	ACT:
	-	HM-111-120 BUS REACTOR INLET LINES	P&ID: MS003669	INCREASED TEMPERATURE	CAUSE: NAP	ACT:

VISTA CHEMICAL COMPANY (TC COMPLIANCE HAZOP)

HAZOP Study Data Report

(Without Grouping)

Risk Code	Criticality & Frequency	Equip ID / Equipment Description	P&ID	Deviation Description	Caused By: / Consequences:	Action Item Request / Action Item Response
	-	HM-111-120 BUS REACTOR INLET LINES	P&ID: MS003669	REDUCED FLOW	CAUSE: SEE OTHER LINES CONSEQ:	ACT:
	-	HM-111-120 BUS REACTOR INLET LINES	P&ID: MS003669	REDUCED PRESSURE	CAUSE: NAP CONSEQ:	ACT:
3	III - B	HM-111-120 BUS REACTOR INLET LINES	P&ID: MS003669	REDUCED TEMPERATURE	CAUSE: HEAT TRACE FAILURE CONSEQ: NOZZLE PLUG, POOR BUS COATING	ACT: SRO WINTERIZATION, OTP
2	II - B	HM-111-120 BUS REACTOR INLET LINES	P&ID: MS003669	CATASTROPHIC LINE FAILURE	CAUSE: VIBRATION, IMPACT CONSEQ: EXPOSURE , VCM RELEASE	ACT: SRO OTP, SUPPORT DESIGN, MAINT. PROC
2	III - A	HM-111-120 BUS REACTOR INLET LINES	P&ID: MS003669	MAINTENANCE	CAUSE: PLUGGED NOZZLE CONSEQ: PRODUCTION LOSS CONTAMINATION PERSONNEL EXPOSURE	ACT: SRO OTP, MAINTENANCE PROCEDURES
4	IV - B	WX-130/139-E-A13-1 WATER FLUSH LINE	P&ID: MS003669	NO FLOW	CAUSE: CHECK VALVE PLUGGED VALVE PLUGGED CONSEQ: PLUGGED NOZZLE	ACT:
	-	WX-130/139-E-A13-1 WATER FLUSH LINE	P&ID: MS003669	REVERSE FLOW	CAUSE: NAP CONSEQ:	ACT:
	-	WX-130/139-E-A13-1 WATER FLUSH LINE	P&ID: MS003669	INCREASED FLOW	CAUSE: NAP CONSEQ:	ACT:
	-	WX-130/139-E-A13-1 WATER FLUSH LINE	P&ID: MS003669	INCREASED PRESSURE	CAUSE: NAP CONSEQ:	ACT:
	-	WX-130/139-E-A13-1 WATER FLUSH LINE	P&ID: MS003669	INCREASED TEMPERATURE	CAUSE: NAP CONSEQ:	ACT:
4	IV - A	WX-130/139-E-A13-1 WATER FLUSH LINE	P&ID: MS003669	REDUCED FLOW	CAUSE: FILTER PLUGGED LOW HEADER PRESSURE CONSEQ: PLUGGED NOZZLE	ACT:

VISTA CHEMICAL COMPANY (TC COMPLIANCE HAZOP)

HAZOP Study Data Report

(Without Grouping)

Risk Code	Criticality & Frequency	Equip ID Equipment Description	P&ID	Deviation Description	Caused By: Consequences:	Action Item Request Action Item Response
	-	WX-130/139-E-A13-1 WATER FLUSH LINE	P&ID: MS003669	REDUCED PRESSURE	CAUSE: NAP CONSEQ:	ACT:
	-	WX-130/139-E-A13-1 WATER FLUSH LINE	P&ID: MS003669	REDUCED TEMPERATURE	CAUSE: NAP CONSEQ:	ACT:
3	III - B	WX-130/139-E-A13-1 WATER FLUSH LINE	P&ID: MS003669	FILTERS (300,400)	CAUSE: CARBON STEEL LINE CONSEQ: CONTAMINATED RESIN PLUGGED NOZZLE	ACT: REVIEW THAT ALL CS LINE HAVE FILTERS SAI=>
3	III - B	SM-139/148-H-A13 STEAM LINES	P&ID: MS0036669	NO FLOW	CAUSE: CLOSED GLOBE VALVE PLUGGED LINE UTILLITY FAILURE CONSEQ: IMPROPER BUS INJECTION	ACT:
4	III - C	SM-139/148-H-A13 STEAM LINES	P&ID: MS0036669	REVERSE FLOW	CAUSE: KILL VALVES LEAK IMPROPER SEQUENCE OF VALVES CONSEQ: ISONOX COATING IN STEAM LINE, ISONOX IN NEXT BATCH, BAD BATCH	ACT: CONFIRM TSO VALVES
4	IV - A	SM-139/148-H-A13 STEAM LINES	P&ID: MS0036669	INCREASED FLOW	CAUSE: GLOBE VALVE OPEN TOO WIDE CAT. PIPE FAILURE CONSEQ: OVERHEAT REACTOR PRODUCTION LOSS THERMAL BURN NOZZLE DAMAGE	ACT:
	-	SM-139/148-H-A13 STEAM LINES	P&ID: MS0036669	INCREASED PRESSURE	CAUSE: NAP CONSEQ:	ACT:
	-	SM-139/148-H-A13 STEAM LINES	P&ID: MS0036669	INCREASED TEMPERATURE	CAUSE: NAP CONSEQ:	ACT:
	-	SM-139/148-H-A13 STEAM LINES	P&ID: MS0036669	REDUCED FLOW	CAUSE: SEE NO FLOW CONSEQ:	ACT:
	-	SM-139/148-H-A13 STEAM LINES	P&ID: MS0036669	REDUCED PRESSURE	CAUSE: NAP	ACT:

VISTA CHEMICAL COMPANY (TC COMPLIANCE HAZOP)

HAZOP Study Data Report

(Without Grouping)

Risk Code	Criticality & Frequency	Equip ID Equipment Description	P&ID	Deviation Description	Caused By: Consequences:	Action Item Request Action Item Response
	-	SM-139/148-H-A13 STEAM LINES	P&ID: MS0036669	REDUCED TEMPERATURE	CAUSE: NAP CONSEQ:	ACT:
4	IV - B	HM-122/128 KILL LINES	P&ID: MS003669	NO FLOW	CAUSE: PLUGGED LIN LOSS OF TRACING CONSEQ: BAD 600 BATCH	ACT:
	-	HM-122/128 KILL LINES	P&ID: MS003669	REVERSE FLOW	CAUSE: NAP CONSEQ:	ACT:
	-	HM-122/128 KILL LINES	P&ID: MS003669	INCREASED FLOW	CAUSE: NAP CONSEQ:	ACT:
	-	HM-122/128 KILL LINES	P&ID: MS003669	INCREASED PRESSURE	CAUSE: NAP CONSEQ:	ACT:
	-	HM-122/128 KILL LINES	P&ID: MS003669	INCREASED TEMPERATURE	CAUSE: NAP CONSEQ:	ACT:
	-	HM-122/128 KILL LINES	P&ID: MS003669	REDUCED FLOW	CAUSE: NAP CONSEQ:	ACT:
	-	HM-122/128 KILL LINES	P&ID: MS003669	REDUCED PRESSURE	CAUSE: NAP CONSEQ:	ACT:
	-	HM-122/128 KILL LINES	P&ID: MS003669	REDUCED TEMPERATURE	CAUSE: LOSS OF TRACING CONSEQ: PLUGGED LINE	ACT:
4	IV - A	2.5-WP-105 LINE TO SMALL BLEND TANKS	P&ID: P+ID #3	NO FLOW	CAUSE: BLOCKED VALVE, PLUGGED LINE, PUMP FAILURE, PLUGGED STRAINER CONSEQ: LOSS OF PRODUCTION	ACT:
4	IV - B	2.5-WP-105 LINE TO SMALL BLEND TANKS	P&ID: P+ID #3	REVERSE FLOW	CAUSE: VALVE ALIGNMENT ON STRIPPERS CONSEQ: OVERFILL BATCH STRIPPERS AND ERS SYSTEM	ACT:

VISTA CHEMICAL COMPANY (TC COMPLIANCE HAZOP)

HAZOP Study Data Report

(Without Grouping)

Risk Code	Criticality & Frequency	Equip ID / Equipment Description	P&ID	Deviation Description	Caused By: / Consequences:	Action Item Request / Action Item Response
	-	2.5-WP-105 LINE TO SMALL BLEND TANKS	P&ID: P+ID #3	INCREASED FLOW	CAUSE: NAP CONSEQ:	ACT:
	-	2.5-WP-105 LINE TO SMALL BLEND TANKS	P&ID: P+ID #3	INCREASED PRESSURE	CAUSE: NAP CONSEQ:	ACT:
	-	2.5-WP-105 LINE TO SMALL BLEND TANKS	P&ID: P+ID #3	INCREASED TEMPERATURE	CAUSE: NAP CONSEQ:	ACT:
	-	2.5-WP-105 LINE TO SMALL BLEND TANKS	P&ID: P+ID #3	REDUCED FLOW	CAUSE: SEE NO FLOW CONSEQ:	ACT:
	-	2.5-WP-105 LINE TO SMALL BLEND TANKS	P&ID: P+ID #3	REDUCED PRESSURE	CAUSE: NAP CONSEQ:	ACT:
4	IV - B	2.5-WP-105 LINE TO SMALL BLEND TANKS	P&ID: P+ID #3	REDUCED TEMPERATURE	CAUSE: WINTER CONDITIONS CONSEQ: FREEZE LINE	ACT: SRO OTP AND MAINTENANCE
4	IV - A	2.5-WP-105 LINE TO SMALL BLEND TANKS	P&ID: P+ID #3	PUMP CONSIDERATIONS	CAUSE: OVERHEATING, SEAL FAILURE, BEARING FAILURE, CAVITATION, NO FLUSH CONSEQ: PUMP FAILURE	ACT:
4	IV - B	2.5-WP-105 LINE TO SMALL BLEND TANKS	P&ID: P+ID #3	PROCESS WATER - NO FLOW	CAUSE: CONTROLLER FAILURE, VALVE/LINE PLUGGAGE, FREEZE CONSEQ: PUMP FAILURE	ACT:
	-	3-WP-104 STRIPPER TO CENTRATE	P&ID: P+ID #3	NO FLOW	CAUSE: CLOSED VALVES, PLUGGED LINE CONSEQ: NAP	ACT:
	-	3-WP-104 STRIPPER TO CENTRATE	P&ID: P+ID #3	REVERSE FLOW	CAUSE: SEE WP-105 CONSEQ:	ACT:
	-	3-WP-104 STRIPPER TO CENTRATE	P&ID: P+ID #3	INCREASED FLOW	CAUSE: NAP CONSEQ:	ACT:

VISTA CHEMICAL COMPANY (TC COMPLIANCE HAZOP)

HAZOP Study Data Report

(Without Grouping)

Risk Code	Criticality & Frequency	Equip ID Equipment Description	P&ID	Deviation Description	Caused By: Consequences:	Action Item Request Action Item Response
	-	3-WP-104 STRIPPER TO CENTRATE	P&ID: P+ID #3	INCREASED PRESSURE	CAUSE: NAP CONSEQ:	ACT:
	-	3-WP-104 STRIPPER TO CENTRATE	P&ID: P+ID #3	INCREASED TEMPERATURE	CAUSE: NAP CONSEQ:	ACT:
	-	3-WP-104 STRIPPER TO CENTRATE	P&ID: P+ID #3	REDUCED FLOW	CAUSE: SEE NO FLOW CONSEQ:	ACT:
	-	3-WP-104 STRIPPER TO CENTRATE	P&ID: P+ID #3	REDUCED PRESSURE	CAUSE: NAP CONSEQ:	ACT:
4	IV - A	3-WP-104 STRIPPER TO CENTRATE	P&ID: P+ID #3	REDUCED TEMPERATURE	CAUSE: WINTER CONDITIONS CONSEQ: FREEZE LINE	ACT: SRO WINTERIZATION TEST AND SEWER STRIPPER WATER IF ACCEPTABLE
3	III - B	WC-100/109 CWS TO MIDDLE OF JACKET	P&ID: JRW SKETCH	NO FLOW	CAUSE: CLOSED VALVE COOLING WATER OFF PLUGGED LINE CONSEQ: POSSIBLE BUILD-UP AND CONTAMINATION, PRODUCTION LOSS	ACT: SRO VALVE LOCKING PROCEDURE JAW=>
	-	WC-100/109 CWS TO MIDDLE OF JACKET	P&ID: JRW SKETCH	REVERSE FLOW	CAUSE: NAP CONSEQ:	ACT:
3	III - B	WC-100/109 CWS TO MIDDLE OF JACKET	P&ID: JRW SKETCH	INCREASED FLOW	CAUSE: OPEN GLOBE VALVE CONSEQ: LONG HEAT-UP TIME TEMPERATURE CONTROL PROBLEMS, CW CAP. PROBLEMS	ACT:
4	IV - B	WC-100/109 CWS TO MIDDLE OF JACKET	P&ID: JRW SKETCH	INCREASED PRESSURE	CAUSE: GLOBE VALVE FAILURE CONSEQ: LIFT RELIEF VALVE	ACT:
	-	WC-100/109 CWS TO MIDDLE OF JACKET	P&ID: JRW SKETCH	INCREASED TEMPERATURE	CAUSE: NAP CONSEQ:	ACT:

VISTA CHEMICAL COMPANY (TC COMPLIANCE HAZOP)

HAZOP Study Data Report

(Without Grouping)

Risk Code	Criticality & Frequency	Equip ID Equipment Description	P&ID	Deviation Description	Caused By: Consequences:	Action Item Request Action Item Response
	-	WC-100/109 CWS TO MIDDLE OF JACKET	P&ID: JRW SKETCH	REDUCED FLOW	CAUSE: SEE NO FLOW CONSEQ:	ACT:
	-	WC-100/109 CWS TO MIDDLE OF JACKET	P&ID: JRW SKETCH	REDUCED PRESSURE	CAUSE: NAP CONSEQ:	ACT:
	-	WC-100/109 CWS TO MIDDLE OF JACKET	P&ID: JRW SKETCH	REDUCED TEMPERATURE	CAUSE: NAP CONSEQ:	ACT: