VISTA CHEMICAL COMPANY

ABERDEEN CHEMICAL PLANT

ABERDEEN, MISSISSIPPI

HAZARD AND OPERABILITY STUDY

FOR

5305 DECALCIFIED WATER SYSTEM

PROJECT

OCTOBER 1990

Table of Contents

HAZOP REPORT VOLUME

Legal Notice i
List of Abbreviations. ii

1.0 Purpose. 1-1

2.0 Scope. 2-1

3.0 Methodology. 3-1
3.1 Introduction 3-2
3.2 Team Members 3-4
3.3 Documents made available 3-6
3.4 Forms used 3-7
3.5 Preliminary hazard identification. 3-7
3.6 Criticality evaluation 3-8
3.7 Documents used 3-10

4.0 Mitigation 4-1
4.1 Mitigation Summary . . . . . .
4.2 Critical Identified Hazards. . . . . .

5.0 P&IDs. 5-1

APPENDIX

A. Study Data Report by Criticality Rank. A-1
B. Study Data Report by Equipment Number. B-1

VAB.0001089150

LEGAL NOTICE

This report was prepared by VISTA Chemical Company ("VISTA") for internal use only. Neither Vista nor any affiliated organizations, nor any person acting in their behalf, (a) makes any warranty, express or implied, with respect to the use of any information or methods disclosed in this report; or (b) assumes any liability with respect to the use of any information or methods disclosed in this report.

VAB.0001089151

List of Abbreviations

ACT	Actuated
AHM	Accurately Hazardous Materials
ALT	Alternate
ATMOS	Atmosphere
A2-1	Piping spec
A13-1	Piping spec
BLDR	Bleeder
BPCV	Back Pressure Control Valve
CHK	Check
CV	Control valve
DM	Drum
EX	Exchange
FL	Filter
FCV	Flow control valve
F/O	Fail open
H2O	Water
HAZAN	Hazard Analysis
HAZOP	Hazard & Operability Study
ID	Identification
INSUL	Insulation
KOH	Potassium hydroxide
LG	Level gage
LK	Leak
LS	Level switch
MAINT	Maintenance
MALF	Malfunction
MATL	Material
MAX	Maximum
MIN	Minimum

VAB.0001089152

List of Abbreviations

MOC	Material of Construction
MOD	Module
MSDS	Material Safety Data Sheet
MV	Manually operated valve
NAP	Not a problem
NORM	Normal
NC	Normally closed
NO	Normally open
OTP	Operator Training & Procedures
PAR	Partially
P&ID	Piping & Instrumentation Diagram
PG	Pressure Gage
PIC	Pressure Indicating Controller
PM	Preventive maintenance
PREP	Preparation
PRESS	Pressure
PROD	Production
PRV	Pressure Relief Valve
PSIG	Pounds per square inch gage
REC	Recommend
REG	Regulator
REV	Revision
RO	Restriction orifice
RV	Relief Valve
SPEC	Specification
SRO	Suggested review of
STD	Standard
TEMP	Temperature
TG	Temperature gauge
TRANS	Transmitter
VAC	Vacuum
VCM	Vinyl Chloride Monomer

VAB.0001089153

Section 1.0 Purpose

The VISTA Chemical Company Aberdeen Plant (Aberdeen, Mississippi) 5305 Decalcified Water System Hazard and Operability (HAZOP) study was conducted to serve many purposes. It will be used to:

- Provide management with the knowledge of where potential hazards exist in the HF Safety Improvements modifications.
- Provide safety and operations related documentation for lines and pieces of equipment included in these modifications.
- Provide a prioritized basis for subsequent risk analysis/assessment work, if necessary.
- Provide documentation for a Risk Management and Prevention Program.
- Provide training on HAZOP methodology and techniques for Vista personnel.

Performing a HAZOP study is generally an assurance that if procedural and/or engineering modifications are implemented to mitigate risk, the plant will then be operating under some lower risk. It is not, however, a guarantee that no risk exists, nor does it guarantee that hazardous events or operating problems will not be encountered.

VAB.0001089154

Section 2.0 Scope

Vista Chemical Company operates a nominal capacity 455 million pound per year PVC plant located in Aberdeen, Mississippi. The plant manufactures PVC resins by polymerizing VCM in batch reactors. Water is a raw material in the reaction and in 5305 grade resin must be decalcified. The 5305 Decalcified Water System is being installed to address this need. The 5305 Decalcified Water System Project is the subject of this HAZOP study.

The hazard identification study focused on the following potential hazards:

- Personnel injury/death resulting from
  - Fire
  - Explosion
  - Toxic exposure
  - Chemical Contact
  - Thermal Burns
  - Asphyxiation
  - Impact injury
  - Etc.
- Equipment/property damage resulting from
  - Fire
  - Explosion
  - Corrosion
  - Misoperation
  - Overpressure
  - Vacuum
  - Overheating
  - Etc.
- Production loss resulting from
  - Equipment damage
  - Maintenance
  - Off specification
  - Turnarounds
  - Raw Material Considerations
  - Etc.
- Environmental
  - Spills
  - Fugitive Emissions
  - Etc.

The HAZOP methodology used during the study is contained in Section 3, the mitigation for the critical identified hazards is contained in Section 4, and the criticality sort/data base is contained in an Appendix.

VAB.0001089155

Section 3.0 Methodology

3.1 Introduction
3.2 Team Members
3.3 Documents Made Available
3.4 Forms Used
3.5 Preliminary Hazard Identification
3.6 Criticality Evaluation
3.7 Documents Used

VAB.0001089156

A

Section 3.1 Introduction

A Hazard and Operability (HAZOP) study is a simple, yet structured methodology for hazard identification. It is an investigation technique which utilizes imaginative thinking in the identification of hazards and operational problems.

A HAZOP study involves a systematic, methodical examination of design documents that describe the facility. The study is performed by a multidisciplinary team to identify potential hazards or operability problems that could result in an accident. Deviations from the design value of key parameters are studied using guide words to control the examination evaluation. This presumes that the design values of flows, temperatures, and other process variables are inherently safe and operable. The study team consists of trained personnel knowledgeable in the technology and operations, and the team will have the necessary technical expertise to answer most questions raised during the review without outside assistance.

As a starting point, we will define the following terms:

Hazard: Anything (chemical reaction, equipment malfunction or operator error) that can lead to an unwanted event.

Operability: Anything that causes the operator to improvise in his actions.

These definitions are an important part of the basic HAZOP premise that the process does not have inherent hazards or operating problems when the unit is operating within design parameters as defined by the basic documents such as the Process Flow Diagrams, equipment specifications, operating procedures, etc. In other words, if there are no deviations from the expected norm, by definition there are no hazard or operability problems.

When performing a HAZOP, a proper mix of meeting participants is very important. The mix of participants should normally include most if not all of the following:

Team leader	Electrical
Process engineer	Safety
Mechanical engineer	Team recorder
Plant operator	Instrumentation
Maintenance	

VAB.0001089157

Of these personnel, many are often only part time participants but remain on call for assistance. It can be seen that the electrical, maintenance and other subjects may only be required on a consulting basis. Also, it is important to keep the size of the review team to a manageable number such as between five to seven so that all members of the team can participate while keeping the effort moving.

The agenda followed during the HAZOP team meetings is as follows:

- Introduce team members: A short biographical sketch by each team member.
- Purpose or goal of HAZOP: A general presentation of the purpose or goal of the HAZOP is made. This serves to direct the HAZOP study.
- HAZOP methodology: A presentation is made by the team facilitator of the methodology to be used in the study. This also establishes the team member "mind set" necessary to conduct an effective HAZOP.
- Process description: A detailed process discussion is presented by the Process Engineer to familiarize the HAZOP team with process scenarios which may lead to a hazardous condition as well as to ensure that all team members have a clear understanding of the basic process.
- AHM properties: An identification and discussion by an industrial hygienist or other knowledgeable person is presented to establish a team recognition of the AHM toxic and hazardous properties.
- Identify hazards: A preliminary identification by team members of hazards present within the process. This serves to focus the HAZOP study.
- Scope the HAZOP: Once the AHM properties are established and discernible HAZOP hazards are identified, the HAZOP scope is set.
- Establish criticality and frequency ratings: Hazard classification matrix parameters are set by the team for subsequent screening of HAZOP identified hazards.
- Define dispersion models: The team identifies AHM release scenarios which will be different cases for dispersion modeling outside of the HAZOP team meeting.
- PCHAZOP* on-line: Load the PCHAZOP* computer program for recording HAZOP team proceedings.
- HAZOP team meetings: A systematic segment by segment team review of the facilities contained within the job scope is executed.

VAB.0001089158

- HAZOP report: A formal report is prepared by the team facilitator, reviewed and commented by the other members, and then becomes a permanent record of the team meetings. Guidelines are presented later in the chapter for report contents.

The HAZOP identified one (1) critical ranked potential hazard with a criticality rank of 2, i.e., which should be improved. Suggested mitigation for this critical ranked hazard is covered in Section 4.0.

The HAZOP identified ten (10) non-critical ranked hazards which require verification that the appropriate engineering and/or administrative controls are in place.

The team identified no hazards of the most critical ranking, that is a hazard rated I-A, i.e., a hazard which could potentially cause a major event to occur more often than once per year. In the event the HAZOP team did identify a hazard that it considered to represent an imminent danger to life or property, the team would have given a verbal presentation to plant management in order to expedite any required mitigation.

Section 3.2 Team Members

The HAZOP study team assembled to identify potential hazard or operability problems should be composed of a multiple disciplined team with the sufficient technical expertise to answer most guide word deviation questions without resorting to further expertise.

The HAZOP study team meetings were held at the VISTA Aberdeen Chemical plant site in Aberdeen, Mississippi. All team members conducting the HAZOP study are employees of VISTA from the Aberdeen plant. They are as follows:

Attendee	Expertise/Responsibility
Dale Andrews*	Instrument Technician
Mike Kane*	Senior Process Engineer
Ed Mize*	Maintenence Representative
Dave Moore*	Process Engineer
Rendell Newton#	Chief Process Engineer
Needham Stahl*	Chief Lead Operator
Jim White*	Mechanical Engineer
Steve Hillman*	Trainer/Facilitator

* = full time
\# = part time

VAB.0001089159

Section 3.3 Documents made available

Prior to the start of the HAZOP, the necessary reference documentation needs to be assembled and made available for use and reference during the HAZOP team study. A meaningful HAZOP study cannot be conducted without the required documentation to review. Assembly of the documentation optimizes the chance for a successful HAZOP.

- NEW MODULE DECALCIFIED WATER SYSTEM P&ID - October 1, 1990
- OLD MODULE DECALCIFIED CHARGE WATER P&ID - August 9, 1990

Section 3.4 Forms used

The HAZOP team data was recorded on standardized forms containing the key questions and answer elements of the HAZOP; one form for each line segment investigated, one form for each equipment item investigated.

The results of the HAZOP studies were recorded on the SWEC proprietary computerized program "PCHAZOP", which is a PC based program designed to provide a simple method for recording and documenting the HAZOP process. The program is designed to run in a database environment to facilitate data storage and retrieval.

The results of the HAZOP studies are included in the Appendix within Section A sorted according to criticality rank and within Section B sorted according to equipment number or line segment.

Section 3.5 Preliminary hazard identification

During the initial stage of the HAZOPs, the team should prepare a preliminary list of potential hazards likely to be encountered during the study. This serves to establish the team's mind-set in hazard identification and focus attention during the study.

The preliminary hazard identification yielded the following five hazards:

- **Impact** - from a fall or from contacting rotating heavy machinery potentially causing physiological injury, death, or equipment damage.
- **Fire** - resulting from the ignition of a flammable material potentially causing physiological injury and or equipment damage.
- **Thermal burn** - resulting from the contact with a hot or cold material potentially causing physiological injury due to thermal stress.
- **Corrosion** - resulting from non-contained chemicals potentially causing equipment failure.

VAB.0001089160

Section 3.6 Criticality evaluation

During the initial stage of the HAZOPs, the team should develop a criticality rating and a probability rating for preparation of a hazard ranking matrix. This is to allow screening of identified hazards by prioritization and sorting to focus subsequent corrective action on the significant identified hazards; eliminating the insignificant or trivial hazards from any further consideration.

To this end, a hazard rating index and a risk ranking matrix was developed in the HAZOP team review as follows:

HAZARD RATING INDEX

Criticality Rating

I	Major	An incident which may result in a possible lost time injury, or a reportable VCM release, or major damage or production loss greater than $1,000,000
II	Severe	An incident which may result in a restricted work case, or a VCM release, or severe damage or production loss between $50,000 and $1,000,000
III	Moderate	An incident which may result in a recordable injury, or moderate damage or production loss between $10,000 and $50,000
IV	Slight	Loss of containment of small amounts of flammable material which may result in slight damage or production loss less than $10,000

Frequency Rating

A	Frequent	Expected to occur frequently in the life of a single plant, i.e., may occur more frequently than once per year
B	Probable	Expected to occur in the life of a single plant, i.e., may occur between 1 and 100 years
C	Occasional	Could occur in the life of a single plant but expected to occur once in the life of multiple plants, i.e., may occur between 100 and 10,000 years
D	Remote	Unlikely to occur in the life of multiple plants, i.e., may occur less frequently than once per 10,000 years

VAB.0001089161

RISK RANKING MATRIX

CRITICALITY \ Frequency	A	B	C	D
I	1	1	2	4
II	1	2	3	4
III	2	3	4	4
IV	4	4	4	4

The risk ranking codes assigned to each grid of the risk ranking matrix are as follows:

Risk Ranking		
1	Unacceptable	Mitigation planning should be completed within six months using engineering and/or administrative controls to reduce the risk ranking to a 3 or less.
2	Undesirable	Mitigation planning should be completed within twelve months using engineering and/or administrative controls to reduce the risk ranking to a 3 or less.
3	Acceptable with controls	Should be verified that procedures or controls are in place
4	Acceptable as is	No mitigation action required

VAB.0001089162

SECTION 4. MITIGATION

SECTION 4.1 MITIGATION SUMMARY

ITEMS WITH A CRITICAL RANK OF 1

Risk Code I-A
No references sighted.

Risk Code I-B
No references sighted.

Risk Code II-A
No references sighted.

ITEMS WITH A CRITICAL RANK OF 2

Risk Code I-C
No references sighted.

Risk Code II-B
One reference sighted.

Item 1 Malfunction Causing in reverse flow of VCM into Depletion of the plant nitrogen system due which may result in a severe consequence of probable occurrence.
- 1 reference
- see pages 1

Risk Code III-A
No references sighted.

SECTION 4.2 MITIGATION SHEETS
SUMMARY OF
CRITICAL IDENTIFIED HAZARDS

5305 DECALCIFIED WATER SYSTEM

CRITICAL RANK: 2,UNDESIRABLE - SHOULD BE IMPROVED
= SEVERE CONSEQUENCE
= PROBABLE OCCURRENCE

DEVIATION: REVERSED FLOW

EQUIPMENT NUMBER: LINES 101/102/106

EQUIPMENT DESCRIPTION: 45-1013 INLET LINE

CAUSE: BOTH WATER CHARGE PUMPS FAIL AND CHECK VALVE FAILS WHILE CV-103B/MV(106) ARE OPEN

CONSEQUENCE:

VCM TO HOT WATER TANK, VCM RELEASE.

SUGGESTED MITIGATION:

SRO LOW FLOW ON CHARGE WATER, SRO PUMP RUN INTERLOCKS.

[redacted]

Verify w/ JRH

VALVES? Reverse flow to close valves.

RESOLUTION:

COMMENTS:

VISTA CHEMICAL COMPANY (5305 DECALCIFIED WATER SYSTEM)

HAZOP Study Data Report

(Grouped by Risk Codes)

Risk Code	Criticality & Frequency	Equip ID / Equipment Description	P&ID	Deviation Description	Caused By: / Consequences:	Action Item Request / Action Item Response
** Risk Code is: 2						
2	II - B	LINES 101/102/104 45-1013 INLET LINE	P&ID: 1 NEW MOD	REVERSE FLOW	CAUSE: BOTH PUMPS FAIL & CHECK VALVE FAIL,CV103B/MV106 OPEN CONSEQ: VCM TO H2O TANK, VCM RELEASE	[redacted] DAM=> VCSM will do

VISTA CHEMICAL COMPANY (5305 DECALCIFIED WATER SYSTEM)

HAZOP Study Data Report

(Grouped by Risk Codes)

Risk Code	Criticality & Frequency	Equip ID / Equipment Description	P&ID	Deviation Description	Caused By: / Consequences:	Action Item Request / Action Item Response
** Risk Code is: 3						
3	III - B	BRINE MKUP & CHG TKS TANKS IN BOTH MODULES	P&ID: 1 & 2	CORROSION	CAUSE: POOR RINSING CONSEQ: STRESS CORROSION CRACKING, TANK FAILURE	ACT: SRO OTP ON CLEANUP PROCEDURES DAM=>
3	III - B	ION EX VESS 45-1013 ION EXCHANGE VESSEL	P&ID: 1 NEW MOD	REVERSE FLOW	CAUSE: SEE LINE 103/108/109 CONSEQ:	ACT:
3	III - B	ION EX VESS 45-1013 ION EXCHANGE VESSEL	P&ID: 1 NEW MOD	REDUCED TEMPERATURE	CAUSE: SEE LINE 101/102/104 CONSEQ:	ACT:
3	II - C	LINE 103/108/109 45-1013 DISCHARGE LINE	P&ID: 1 NEW MOD	INCREASED PRESSURE	CAUSE: SEE LINE 101/102/104 CONSEQ:	ACT:
3	III - B	LINE 103/108/109 45-1013 DISCHARGE LINE	P&ID: 1 NEW MOD	REVERSE FLOW	CAUSE: BOTH PUMPS AND CHECK VALVE FAILS,CV103C/MV OPEN CONSEQ: LOOSE ION RESIN, SLOW H2O CHARGE	ACT: [redacted] [redacted]
3	III - B	LINE 103/108/109 45-1013 DISCHARGE LINE	P&ID: 1 NEW MOD	REDUCED TEMPERATURE	CAUSE: SEE LINE 101/102/104 CONSEQ:	ACT:
3	III - B	LINE 105/110/104 PROCESS H2O THRU 45-1013	P&ID: 1 NEW MOD	INCREASED FLOW	CAUSE: 105MV OPEN TOO MUCH CONSEQ: FLUSH OUT RESIN	ACT: [redacted] DAM=> RO-101/201 to limit flow
3	II - C	LINES 101/102/104 45-1013 INLET LINE	P&ID: 1 NEW MOD	INCREASED PRESSURE	CAUSE: FIRE, MV CLOSE, FILTER PLUG, LINE PLUG, PRV101/102 FAIL CONSEQ: VESSEL FAIL, GASKET FAIL, LOSS PROD, INJURY	ACT:
3	III - B	LINES 101/102/104 45-1013 INLET LINE	P&ID: 1 NEW MOD	REDUCED TEMPERATURE	CAUSE: COLD H2O CONTROL FAILS, LACK OF USE, INSULATION OFF CONSEQ: FREEZE SYSTEM, COLD CHARGE (PARTICLE SIZE)	ACT: SRO WINTERIZATION PROCEDURES AND OTP ON WINTERIZING, PM INSUL JMV=>
3	III - B	P 702 TO LINE 110 REGENERATION HEADER	P&ID: 1 NEW MOD	INCREASED PRESSURE	CAUSE: P-702 DEADHEAD/BACK PRESS CONTROLLER FAIL, 110MV OPEN/BACKPRESS CONSEQ: PUMP FAILURE (OLD MOD MORE CRITICAL DUE TO PUMP TYPE)	ACT: BYPASS BEING ADDED IN OLD MODULE (EXISTS IN NEW MOD), SOR OTP ? JLW=>

VAB.0001089166

VISTA CHEMICAL COMPANY (5305 DECALCIFIED WATER SYSTEM)

HAZOP Study Data Report

(Grouped by Risk Codes)

Risk Code	Criticality & Frequency	Equip ID / Equipment Description	P&ID	Deviation Description	Caused By: / Consequences:	Action Item Request / Action Item Response
** Risk Code is: 4						
4	IV - A	2-WO-207 TANK EQ LINE	P&ID: 2 OLD MOD	NO FLOW	CAUSE: VALVE CLOSED, PUMP FAILURE CONSEQ: PARTIAL REGENERATION	[redacted] OTP [redacted]
4	IV - A	2-WO-207 TANK EQ LINE	P&ID: 2 OLD MOD	REDUCED FLOW	CAUSE: PARTIAL MV CLOSED, LINE BLOCKAGE, PUMP PROBLEMS CONSEQ: SLOW REGENERATION	[redacted] OTP [redacted]
4	IV - A	2-WO-207 TANK EQ LINE	P&ID: 2 OLD MOD	REDUCED PRESSURE	CAUSE: PUMP BLOCKED IN AT TANK CONSEQ: PUMP CAVITATION	[redacted] OTP [redacted]
4	IV - B	2-WO-207 TANK EQ LINE	P&ID: 2 OLD MOD	REDUCED TEMPERATURE	CAUSE: COLD WEATHER CONSEQ: FREEZE LINE AND PUMP	[redacted] AND [redacted]
4	IV - A	ION EX VESS 45-1013 ION EXCHANGE VESSEL	P&ID: 1 NEW MOD	NO FLOW	CAUSE: SEE LINE 101/102/104 CONSEQ:	ACT:
4	IV - A	ION EX VESS 45-1013 ION EXCHANGE VESSEL	P&ID: 1 NEW MOD	INCREASED TEMPERATURE	CAUSE: SEE LINE 101/102/104 CONSEQ:	ACT:
4	IV - A	ION EX VESS 45-1013 ION EXCHANGE VESSEL	P&ID: 1 NEW MOD	REDUCED FLOW	CAUSE: SEE LINE 103/108/109 CONSEQ:	ACT:
4	IV - A	ION EX VESS 45-1013 ION EXCHANGE VESSEL	P&ID: 1 NEW MOD	REDUCED PRESSURE	CAUSE: SEE LINE 101/102/104 CONSEQ:	ACT:
4	IV - A	ION EX VESS 45-1013 ION EXCHANGE VESSEL	P&ID: 1 NEW MOD	MAINTENANCE	CAUSE: REPLACE RESIN, INSPECT INTERNALS, SAMPLE RESIN, TEST PRV CONSEQ: POTENTIAL VCM EXPOSURE, POTENTIAL SLIP/TRIP HAZARDS	[redacted] [redacted]
4	IV - A	ION EX VESS 45-1013 ION EXCHANGE VESSEL	P&ID: 1 NEW MOD	STARTUP/SHUTDOWN	CAUSE: REPLACE RESIN, SAMPLE RESIN, INSPECT VESSEL CONSEQ: DISRUPT BED, POTENTIAL BURN HAZARD, LEAK WATER INTO VESSEL	ACT: [redacted], SMD RESIN [redacted] STARTUP PROCEDURES DAM=>

VAB.0001089167

VISTA CHEMICAL COMPANY (5305 DECALCIFIED WATER SYSTEM)

HAZOP Study Data Report

(Grouped by Risk Codes)

Risk Code	Criticality & Frequency	Equip ID / Equipment Description	P&ID	Deviation Description	Caused By: / Consequences:	Action Item Request / Action Item Response
4	IV - B	ION EX VESS 45-1013 ION EXCHANGE VESSEL	P&ID: 1 NEW MOD	INCREASED PRESSURE	CAUSE: SEE LINE 103/108/109 CONSEQ: DEADHEAD TREATMENT PUMP	ACT: SRO OTP DAM=)
4	IV - A	LINE 103/108/109 45-1013 DISCHARGE LINE	P&ID: 1 NEW MOD	NO FLOW	CAUSE: SEE LINE 101/102/104 NO FLOW, 106MV/105MV OPEN CONSEQ: BAD BATCH, LOST PRODUCTION, POORER QUALITY PRODUCT	ACT: [redacted], SRO OTP, [redacted] VALVE [redacted]=)
4	IV - A	LINE 103/108/109 45-1013 DISCHARGE LINE	P&ID: 1 NEW MOD	INCREASED TEMPERATURE	CAUSE: SEE LINE 101/102/104 CONSEQ:	ACT:
4	IV - A	LINE 103/108/109 45-1013 DISCHARGE LINE	P&ID: 1 NEW MOD	REDUCED FLOW	CAUSE: (SEE NO FLOW), FILTER PLUGGED, MV PARTIALLY CLOSED CONSEQ: SLOW CHARGE	ACT:
4	IV - A	LINE 103/108/109 45-1013 DISCHARGE LINE	P&ID: 1 NEW MOD	SAMPLING AT LINE 108	CAUSE: CHECK QUALITY CONSEQ: POTENTIAL BURN, POTENTIAL TRIP/SLIP HAZARD	[redacted] [redacted]>
4	IV - B	LINE 103/108/109 45-1013 DISCHARGE LINE	P&ID: 1 NEW MOD	INCREASED FLOW	CAUSE: ION EX RESIN LOSS, 110MV OPEN, 109MV TO DRAIN OPEN CONSEQ: SLOW CHARGE, BACK UP INTO GH20 TANK	ACT: RECOMMEND INSTALL CHECK VALVE IN LINE 110 AT PUMP, SRO OTP JME=)
4	IV - B	LINE 103/108/109 45-1013 DISCHARGE LINE	P&ID: 1 NEW MOD	REDUCED PRESSURE	CAUSE: 109MV OPEN, ION BED PLUGGED, FILTER PLUGGED, PUMPS FAIL CONSEQ: SLOW CHARGE	ACT:
4	IV - B	LINE 105/110/104 PROCESS H2O THRU 45-1013	P&ID: 1 NEW MOD	REDUCED TEMPERATURE	CAUSE: TRACING FAILURE,INSULATION MISSING CONSEQ: FREEZE UP LINE. INEFFECTIVE BACKWASH, LINE RUPTURE	ACT: SRO WINTERIZATION PROCEDURES JMV=)
4	IV - A	LINE 105/110/104 PROCESS H2O THRU 45-1013	P&ID: 1 NEW MOD	REVERSE FLOW	CAUSE: OPEN 105MV,LOSS WATER PRES. CONSEQ: SLOW CHARGE OR ABORT BATCH	ACT: SEE LINE 101/102/104, CHECK VALVE LINE 105, SRO OTP JLW=)

VISTA CHEMICAL COMPANY (5305 DECALCIFIED WATER SYSTEM)

HAZOP Study Data Report

(Grouped by Risk Codes)

Risk Code	Criticality & Frequency	Equip ID / Equipment Description	P&ID	Deviation Description	Caused By: / Consequences:	Action Item Request / Action Item Response
4	IV - A	LINE 105/110/104 PROCESS H2O THRU 45-1013	P&ID: 1 NEW MOD	INCREASED PRESSURE	CAUSE: WELL PRESSURE REG FAILURE,105 MV OPEN(NORM OP) CONSEQ: FLUSH RESIN OUT,	[redacted] DTP [redacted]
4	IV - B	LINE 105/110/104 PROCESS H2O THRU 45-1013	P&ID: 1 NEW MOD	NO FLOW	CAUSE: MV CLOSED, VESSEL OR LINE PLUGGED, LOSS OF H2O PRESS CONSEQ: CANT RINSE,CANT USE SYSTEM	ACT:
4	IV - B	LINE 105/110/104 PROCESS H2O THRU 45-1013	P&ID: 1 NEW MOD	REDUCED FLOW	CAUSE: LINE BLOCKAGE,105MV PAR. CLOSED, BED PLUGGED, CONSEQ: IMPROPER BED FLUSH, SWITCH PROD.	ACT:
4	IV - B	LINE 105/110/104 PROCESS H2O THRU 45-1013	P&ID: 1 NEW MOD	REDUCED PRESSURE	CAUSE: LOSS OF H2O PRESSURE,DRAIN VALVE OPEN, WORN ORIFICE CONSEQ: IMPROPER BED FLUSH	ACT:
4	IV - B	LINE 107 SOFT WATER MAKE UP	P&ID: 1 NEW MOD	REDUCED TEMPERATURE	CAUSE: TRACING FAILURE, INSULATION MISSING CONSEQ: FROZEN LINE, METER BURST, LINE BURST	ACT: SRO WINTERIZATION PLAN JMV=>
4	IV - A	LINE 107 SOFT WATER MAKE UP	P&ID: 1 NEW MOD	REDUCED FLOW	CAUSE: ACTUATED OR MV PART. OPEN, METER PROBLEMS CONSEQ: SLOW MAKE UP, OVERFLOW TANK	ACT:
4	IV - A	LINE 107 SOFT WATER MAKE UP	P&ID: 1 NEW MOD	REDUCED PRESSURE	CAUSE: SEE 103/108/109 CONSEQ:	ACT:
4	IV - B	LINE 107 SOFT WATER MAKE UP	P&ID: 1 NEW MOD	NO FLOW	CAUSE: MV CLOSED,METER FAILURE,ACT. VALVE FAILURE, CONSEQ: CANT MAKE UP ANY WATER, MAKE UP BY ALT METHOD	[redacted] DTP [redacted]
4	IV - B	LINE 107 SOFT WATER MAKE UP	P&ID: 1 NEW MOD	INCREASED PRESSURE	CAUSE: BLOCKED ACT VALVE & 107MV OPEN CONSEQ: POTENTIAL METER FAILURE	ACT: CHECK METER PRESSURE RATINGS,SRO DTP JLW=>

VAB.0001089169

VISTA CHEMICAL COMPANY (5305 DECALCIFIED WATER SYSTEM)

HAZOP Study Data Report

(Grouped by Risk Codes)

Risk Code	Criticality & Frequency	Equip ID / Equipment Description	P&ID	Deviation Description	Caused By: / Consequences:	Action Item Request / Action Item Response
4	IV - A	LINES 101/102/104 45-1013 INLET LINE	P&ID: 1 NEW MOD	NO FLOW	CAUSE: CV MISALIGN,MV CLOSE,FILTER PLUG,LINE PLUG,LOSS H2O,POWER FAILURE CONSEQ: PROD LOSS,VCM MISCHARGE,BAD BATCH	[redacted] FLOW ALARM ON CHARGE WATER [redacted] VCSM
4	IV - A	LINES 101/102/104 45-1013 INLET LINE	P&ID: 1 NEW MOD	INCREASED FLOW	CAUSE: MV104 OPEN,PRV101 OR 102 OPEN,ION RESIN LOSS, CONSEQ: SLOW CHARGE	[redacted] OTP [redacted]
4	IV - A	LINES 101/102/104 45-1013 INLET LINE	P&ID: 1 NEW MOD	INCREASED TEMPERATURE	CAUSE: COLD H2O CONTROL FAIL, CONSEQ: REACTOR TEMP ALARM	ACT: LAP
4	IV - A	LINES 101/102/104 45-1013 INLET LINE	P&ID: 1 NEW MOD	REDUCED PRESSURE	CAUSE: MV106 OPEN, PRV101 OR 102 OPEN, MV TO SEWER OPEN, PUMP FAILS CONSEQ: SEE NO FLOW	ACT:
4	IV - A	LINES 101/102/104 45-1013 INLET LINE	P&ID: 1 NEW MOD	MAINTENANCE	CAUSE: VALVE FAILURE, FILTER PLUG, PG AND TG ACCESS CONSEQ: LIFT/FALLING/SLIP POTENTIAL HAZARD	ACT: MAINTAIN SAFE WORK PRACTICES
4	IV - B	P 702 TO LINE 110 REGENERATION HEADER	P&ID: 1 NEW MOD	NO FLOW	CAUSE: MV CLOSED, PUMP FAILURE, LINE BLOCKED, TANK EMPTY CONSEQ: NO REGENERATION, SWITCH PRODUCTS	ACT: [redacted]
4	IV - B	P 702 TO LINE 110 REGENERATION HEADER	P&ID: 1 NEW MOD	REVERSE FLOW	CAUSE: CHECK VALVE FAIL & MV OPEN CONSEQ: OVERFLOW TANK, SLOW CHARGE TO REACTOR	[redacted]
4	IV - B	P 702 TO LINE 110 REGENERATION HEADER	P&ID: 1 NEW MOD	REDUCED FLOW	CAUSE: DRAIN VALVE OPEN, PLUGGED RO, BPCV FAIL OPEN CONSEQ: SLOW REGENERATION, MAINTENANCE REQUIRED	ACT:
4	IV - B	P 702 TO LINE 110 REGENERATION HEADER	P&ID: 1 NEW MOD	REDUCED PRESSURE	CAUSE: DRAIN VALVE OPEN, PUMP FAIL, WORN RO CONSEQ: SEE REDUCED FLOW	ACT:

VISTA CHEMICAL COMPANY (5305 DECALCIFIED WATER SYSTEM)

HAZOP Study Data Report

(Grouped by Risk Codes)

Risk Code	Criticality & Frequency	Equip ID Equipment Description	P&ID	Deviation Description	Caused By: Consequences:	Action Item Request Action Item Response
4	IV - B	P 702 TO LINE 110 REGENERATION HEADER	P&ID: 1 NEW MOD	REDUCED TEMPERATURE	CAUSE: SEE P-701 PUMP SUCTION AND DISCHARGE CONSEQ:	ACT:
4	IV - B	P 702 TO LINE 110 REGENERATION HEADER	P&ID: 1 NEW MOD	CORROSION	CAUSE: POOR FLUSH OF BRINE WATER CONSEQ: LINE AND EQUIPMENT FAILURE	[redacted]
4	IV - A	P-701 PUMP SUCTION AND DISCHRG	P&ID: 1 NEW MOD	INCREASED PRESSURE	CAUSE: CLOSED MV CONSEQ: DEADHEAD PUMP	[redacted]
4	IV - B	P-701 PUMP SUCTION AND DISCHRG	P&ID: 1 NEW MOD	NO FLOW	CAUSE: VALVE FAILURE, PUMP FAILURE, LINE PLUGGAGE, LS FAILURE CONSEQ: CANT REGENERATE, SWITCH PRODUCTS	ACT:
4	IV - B	P-701 PUMP SUCTION AND DISCHRG	P&ID: 1 NEW MOD	REDUCED FLOW	CAUSE: MV THROTTLED, CHK VALVE FAILURE, WORN PUMP, SUCTION VALVE CLOSED CONSEQ: RUN PUMP DRY, DELAYED REGENERATION	ACT:

VISTA CHEMICAL COMPANY (5305 DECALCIFIED WATER SYSTEM)

HAZOP Study Data Report

(Grouped by Risk Codes)

Risk Code	Criticality & Frequency	Equip ID / Equipment Description	P&ID	Deviation Description	Caused By: / Consequences:	Action Item Request / Action Item Response
** Risk Code is:						
	-	2-WO-207 TANK EQ LINE	P&ID: 2 OLD MOD	REVERSE FLOW	CAUSE: NAP CONSEQ:	ACT:
	-	2-WO-207 TANK EQ LINE	P&ID: 2 OLD MOD	INCREASED FLOW	CAUSE: NAP CONSEQ:	ACT:
	-	2-WO-207 TANK EQ LINE	P&ID: 2 OLD MOD	INCREASED PRESSURE	CAUSE: NAP CONSEQ:	ACT:
	-	2-WO-207 TANK EQ LINE	P&ID: 2 OLD MOD	INCREASED TEMPERATURE	CAUSE: NAP CONSEQ:	ACT:
	-	BRINE MKUP & CHG TKS TANKS IN BOTH MODULES	P&ID: 1 & 2	NO FLOW	CAUSE: NAP CONSEQ:	ACT:
	-	BRINE MKUP & CHG TKS TANKS IN BOTH MODULES	P&ID: 1 & 2	REVERSE FLOW	CAUSE: NAP CONSEQ:	ACT:
	-	BRINE MKUP & CHG TKS TANKS IN BOTH MODULES	P&ID: 1 & 2	INCREASED FLOW	CAUSE: NAP CONSEQ:	ACT:
	-	BRINE MKUP & CHG TKS TANKS IN BOTH MODULES	P&ID: 1 & 2	INCREASED PRESSURE	CAUSE: NAP CONSEQ:	ACT:
	-	BRINE MKUP & CHG TKS TANKS IN BOTH MODULES	P&ID: 1 & 2	INCREASED TEMPERATURE	CAUSE: NAP CONSEQ:	ACT:
	-	BRINE MKUP & CHG TKS TANKS IN BOTH MODULES	P&ID: 1 & 2	REDUCED FLOW	CAUSE: NAP CONSEQ:	ACT:
	-	BRINE MKUP & CHG TKS TANKS IN BOTH MODULES	P&ID: 1 & 2	REDUCED PRESSURE	CAUSE: NAP CONSEQ:	ACT:
	-	BRINE MKUP & CHG TKS TANKS IN BOTH MODULES	P&ID: 1 & 2	REDUCED TEMPERATURE	CAUSE: NAP CONSEQ:	ACT:

VISTA CHEMICAL COMPANY (5305 DECALCIFIED WATER SYSTEM)

HAZOP Study Data Report

(Grouped by Risk Codes)

Risk Code	Criticality & Frequency	Equip ID / Equipment Description	P&ID	Deviation Description	Caused By: / Consequences:	Action Item Request / Action Item Response
	-	ION EX VESS 45-1013 ION EXCHANGE VESSEL	P&ID: 1 NEW MOD	INCREASED FLOW	CAUSE: NAP CONSEQ:	ACT:
	-	LINE 105/110/104 PROCESS H2O THRU 45-1013	P&ID: 1 NEW MOD	INCREASED TEMPERATURE	CAUSE: ELEC TRAC HEATING CONSEQ: NAP	ACT:
	-	LINE 105/110/104 PROCESS H2O THRU 45-1013	P&ID: 1 NEW MOD	MAINTENANCE	CAUSE: FLOW METER FAILURE/CALIBRATION CONSEQ: NAP	ACT:
	-	LINE 105/110/104 PROCESS H2O THRU 45-1013	P&ID: 1 NEW MOD	CORROSION	CAUSE: FAILURE TO FLUSH 105 CONSEQ: NAP	ACT:
	-	LINE 107 SOFT WATER MAKE UP	P&ID: 1 NEW MOD	REVERSE FLOW	CAUSE: NAP CONSEQ:	ACT:
	-	LINE 107 SOFT WATER MAKE UP	P&ID: 1 NEW MOD	INCREASED FLOW	CAUSE: NAP CONSEQ:	ACT:
	-	LINE 107 SOFT WATER MAKE UP	P&ID: 1 NEW MOD	INCREASED TEMPERATURE	CAUSE: NAP CONSEQ:	ACT:
	-	LINES 101/102/104 45-1013 INLET LINE	P&ID: 1 NEW MOD	REDUCED FLOW	CAUSE: SEE NO FLOW CONSEQ:	ACT:
	-	P 702 TO LINE 110 REGENERATION HEADER	P&ID: 1 NEW MOD	INCREASED FLOW	CAUSE: DRAIN VALVE OPEN BEFORE VESSEL CONSEQ: NAP	ACT:
	-	P 702 TO LINE 110 REGENERATION HEADER	P&ID: 1 NEW MOD	INCREASED TEMPERATURE	CAUSE: NAP CONSEQ:	ACT:
	-	P-701 PUMP SUCTION AND DISCHRG	P&ID: 1 NEW MOD	REVERSE FLOW	CAUSE: CHECK VALVE FAILURE & PUMP OFF, DRAIN VALVE OPEN CONSEQ: NAP	ACT:
	-	P-701 PUMP SUCTION AND DISCHRG	P&ID: 1 NEW MOD	INCREASED FLOW	CAUSE: NAP CONSEQ:	ACT:

VISTA CHEMICAL COMPANY (5305 DECALCIFIED WATER SYSTEM)

HAZOP Study Data Report

(Grouped by Risk Codes)

Risk Code	Criticality & Frequency	Equip ID / Equipment Description	P&ID	Deviation Description	Caused By: / Consequences:	Action Item Request / Action Item Response
-		P-701 PUMP SUCTION AND DISCHRG	P&ID: 1 NEW MOD	INCREASED TEMPERATURE	CAUSE: NAP CONSEQ:	ACT:
-		P-701 PUMP SUCTION AND DISCHRG	P&ID: 1 NEW MOD	REDUCED PRESSURE	CAUSE: NAP CONSEQ:	ACT:
-		P-701 PUMP SUCTION AND DISCHRG	P&ID: 1 NEW MOD	REDUCED TEMPERATURE	CAUSE: SEE LINE 107 CONSEQ:	ACT:

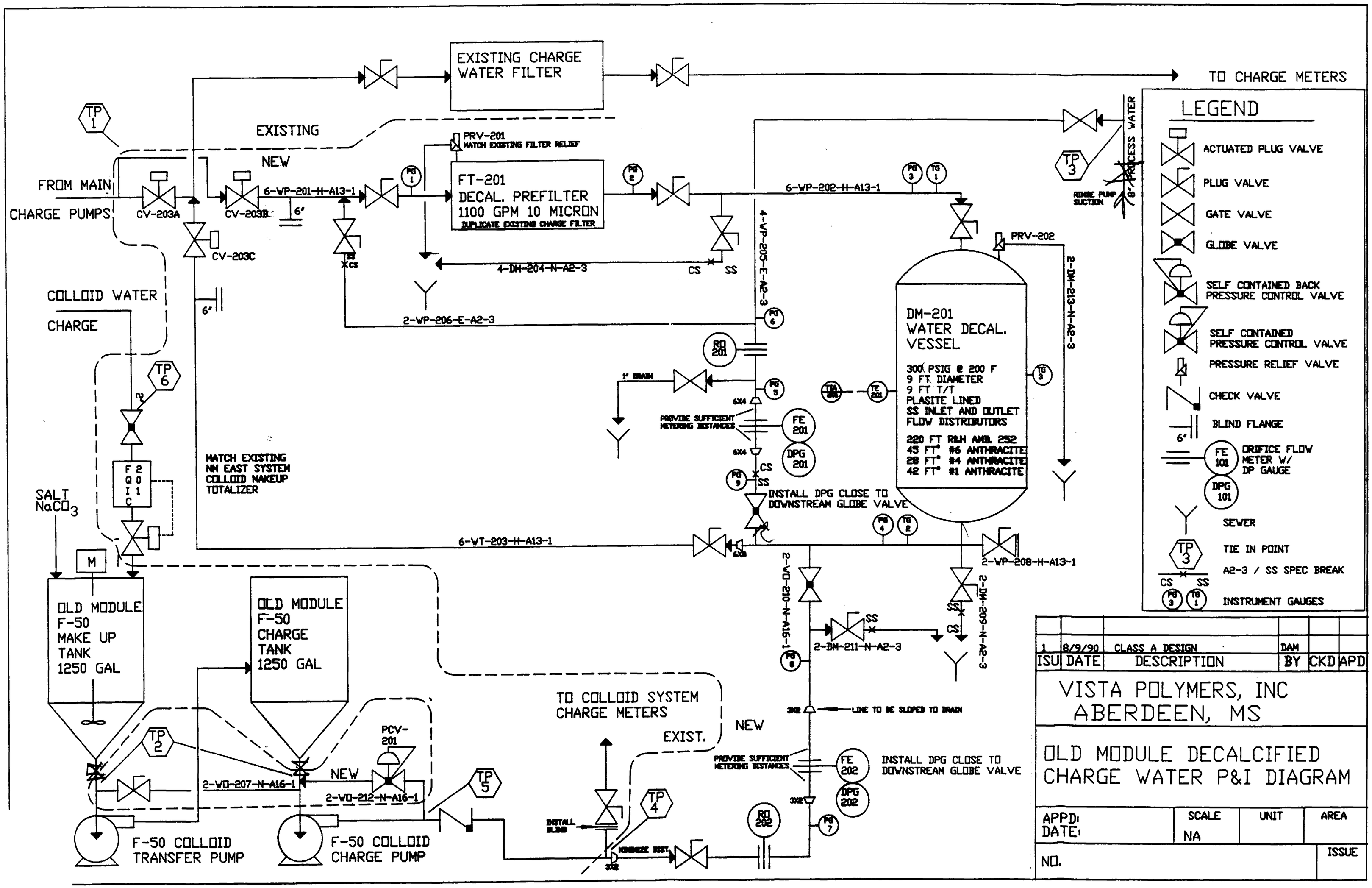

VAB.0001089175

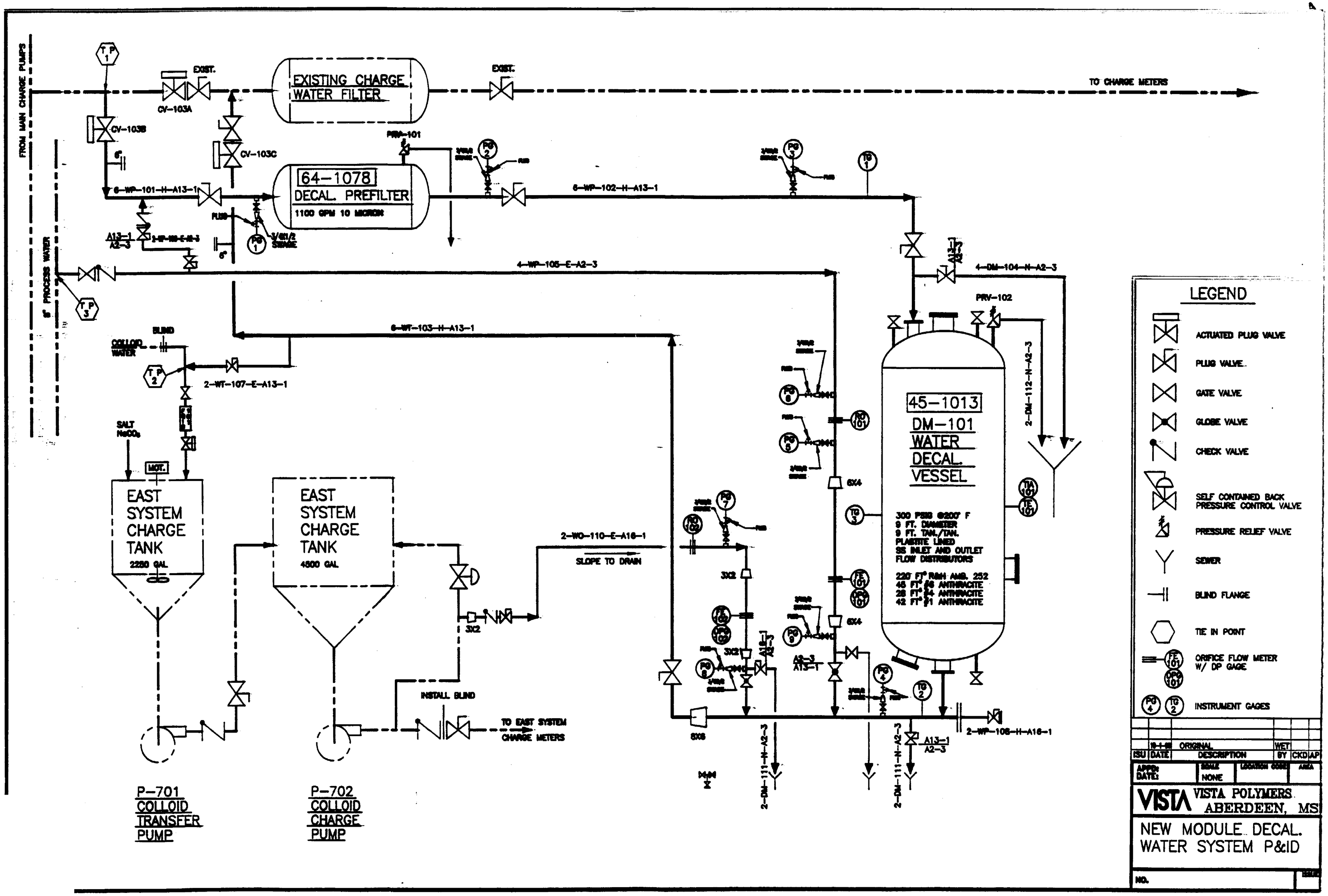

VAB.0001089176

5305 DECALCIFIED WATER SYSTEM

CRITICAL RANK: 2,UNDESIRABLE - SHOULD BE IMPROVED
= SEVERE CONSEQUENCE
= PROBABLE OCCURRENCE

DEVIATION: REVERSED FLOW

EQUIPMENT NUMBER: LINES 101/102/106

EQUIPMENT DESCRIPTION: 45-1013 INLET LINE

CAUSE: BOTH WATER CHARGE PUMPS FAIL AND CHECK VALVE FAILS WHILE CV-103B/MV(106) ARE OPEN

CONSEQUENCE:

VCM TO HOT WATER TANK, VCM RELEASE.

SUGGESTED MITIGATION:

SRO LOW FLOW ON CHARGE WATER, SRO PUMP RUN INTERLOCKS.

RESOLUTION:

COMMENTS:

To SCH

From DAMO

Calculation Sheet

VISTA

RE: DECAL HAZOP ACTION STEPS LIST

DEVIATION	ACTION
REVERSE FLOW LINES 101/102/106 OR NO FLOW	VCSM is installing low flow alarms on all reactor additives
Increased FLOW LINE 105/110/104	RO-101 to prevent increased FLOW. WILL VERIFY upon START UP

All OTHER ACTION STEPS WERE SRO OTP and will be covered in operating manual.

DAMO

Made By

Date

Page of

Job No.

Title

VAB.0001089178

V3-20G-S

M A T E R I A L S A F E T Y D A T A S H E E T

Dow Chemical U.S.A.* Midland, MI 48674 Emergency Phone: 517-636-4400

Product Code: 23066
Product Name: DOWEX (R) MSC-1, 20-50 MESH, NA CATION EXCHANGE RESIN

Effective Date: 06/18/90 Date Printed: 09/05/90 MSD: 001158

1. INGREDIENTS: (% w/w, unless otherwise noted)

Sulfonated copolymer of styrene and divinylbenzene in the sodium form	CAS# 069011-22-9	40-70%
Water	CAS# 007732-18-5	

This document is prepared pursuant to the OSHA Hazard Communication Standard (29 CFR 1910.1200). In addition, other substances not 'Hazardous' per this OSHA Standard may be listed. Where proprietary ingredient shows, the identity may be made available as provided in this standard.

2. PHYSICAL DATA:

BOILING POINT: Not applicable
VAP PRESS: Not applicable
VAP DENSITY: Not applicable
SOL. IN WATER: Insoluble
SP. GRAVITY: Density 53 lb/ft3
APPEARANCE: Light yellow to amber solid (beads).
ODOR: Not applicable

3. FIRE AND EXPLOSION HAZARD DATA:

FLASH POINT: Not applic.
METHOD USED: Not applic.

FLAMMABLE LIMITS
LFL: Not applic.
UFL: Not applic.

EXTINGUISHING MEDIA: Dry chemical.

FIRE & EXPLOSION HAZARDS: Product is not combustible until moisture is removed, then resin starts to burn in flame at 230C. Autoignition occurs above 500C. Naphthalene, benzaldehydes, phenol, carbon dioxide, water, sulfur oxides, organic sulfonates are possible fire combustion products.

FIRE-FIGHTING EQUIPMENT: Wear positive pressure self-contained breathing apparatus.

(Continued on Page 2)
(R) Indicates a Trademark of The Dow Chemical Company

* An Operating Unit Of The Dow Chemical Company

4. REACTIVITY DATA:

STABILITY: (CONDITIONS TO AVOID) Stable under normal handling and storage conditions. See incompatibility statement.

INCOMPATIBILITY: (SPECIFIC MATERIALS TO AVOID) Warning: Oxidizing agents such as nitric acid attack organic ion exchange resins under certain conditions and could result in a slightly degraded resin up to an explosive reaction. Before using strong oxidizing agents, consult sources knowledgeable in handling such materials.

HAZARDOUS DECOMPOSITION PRODUCTS: See possible combustion products in section 3.

HAZARDOUS POLYMERIZATION: Will not occur.

5. ENVIRONMENTAL AND DISPOSAL INFORMATION:

ACTION TO TAKE FOR SPILLS/LEAKS: Sweep up. Caution: May be slippery.

DISPOSAL METHOD: Bury resin in licensed landfill or burn in approved incinerator according to local, state, and federal regulations. For resin contaminated with hazardous material, dispose of mixture as hazardous material according to local, state, and federal regulations.

6. HEALTH HAZARD DATA:

EYE: May cause slight transient (temporary) eye irritation. Solid or dust may cause irritation or corneal injury due to mechanical action.

SKIN CONTACT: Essentially nonirritating to skin.

SKIN ABSORPTION: Skin absorption is unlikely due to physical properties.

INGESTION: Single dose oral toxicity is believed to be low. No hazards anticipated from ingestion incidental to industrial exposure.

(Continued on Page 3)
(R) Indicates a Trademark of The Dow Chemical Company

* An Operating Unit Of The Dow Chemical Company

6. HEALTH HAZARD DATA: (CONTINUED)

INHALATION: Vapors are unlikely due to physical properties.

SYSTEMIC & OTHER EFFECTS: No specific data available, however, repeated exposures are not anticipated to cause any significant adverse effects.

7. FIRST AID:

EYES: Irrigate immediately with water for at least 5 minutes.

SKIN: No adverse effects anticipated by this route of exposure.

INGESTION: No adverse effects anticipated by this route of exposure incidental to proper industrial handling.

INHALATION: No adverse effects anticipated by this route of exposure.

8. HANDLING PRECAUTIONS:

EXPOSURE GUIDELINE(S): None established.

VENTILATION: Good general ventilation should be sufficient.

RESPIRATORY PROTECTION: No respiratory protection should be needed.

SKIN PROTECTION: No precautions other than clean body-covering clothing should be needed.

EYE PROTECTION: Use safety glasses.

9. ADDITIONAL INFORMATION:

SPECIAL PRECAUTIONS TO BE TAKEN IN HANDLING AND STORAGE: Practice reasonable care and caution. Metal equipment should be compatible with feed, regenerant, resin form, and effluent of that process.

(Continued on Page 4)
(R) Indicates a Trademark of The Dow Chemical Company

* An Operating Unit Of The Dow Chemical Company

9. ADDITIONAL INFORMATION: (CONTINUED)

TSCA CONSIDERATIONS:
Every different salt or ionic form of an ion-exchange resin is a separate chemical. If you use an ion-exchange resin for ion-exchange purposes and then remove the by-product resin from its vessel or container prior to recovery of the original or another form of the resin or of another chemical, the by-product resin must be listed on the TSCA Inventory (unless an exemption is applicable). It is the responsibility of the customer to ensure that such isolated, recycled by-product resins are in compliance with TSCA. Failure to comply could result in substantial civil or criminal penalties being assessed by the Environmental Protection Agency.

MSDS STATUS: Revised section 9 and regsheet.

(Continued on Page 5)
(R) Indicates a Trademark of The Dow Chemical Company

REGULATORY INFORMATION: (Not meant to be all-inclusive--selected regulations represented.)

NOTICE: The information herein is presented in good faith and believed to be accurate as of the effective date shown above. However, no warranty, express or implied, is given. Regulatory requirements are subject to change and may differ from one location to another; it is the buyer's responsibility to ensure that its activities comply with federal, state or provincial, and local laws. The following specific information is made for the purpose of complying with numerous federal, state or provincial, and local laws and regulations. See MSD Sheet for health and safety information.

U.S. REGULATIONS

SARA HAZARD CATEGORY: This product has been reviewed according to the EPA "Hazard Categories" promulgated under Sections 311 and 312 of the Superfund Amendment and Reauthorization Act of 1986 (SARA Title III) and is considered, under applicable definitions, to meet the following categories:

Not to have met any hazard category

CANADIAN REGULATIONS

The Workplace Hazardous Materials Information System (W.H.M.I.S.) Classification for this product is:

D2B

The Transportation of Dangerous Goods Act (T.D.G.A.) classification for this product is:

(Continued on Page 6)
(R) Indicates a Trademark of The Dow Chemical Company

* An Operating Unit Of The Dow Chemical Company

REGULATORY INFORMATION:(CONTINUED)

Not regulated

(R) Indicates a Trademark of The Dow Chemical Company
The Information Herein Is Given In Good Faith, But No Warranty,
Express Or Implied, Is Made. Consult The Dow Chemical Company
For Further Information.

* An Operating Unit Of The Dow Chemical Company

THE DOW CHEMICAL COMPANY QUALITY ASSURANCE OFFICE

SALES SPECIFICATION

DATE PRINTED: 05 SEP 90 PAGE: 01

PRODUCT: 23066 EFFECTIVE: 13 NOV 78 SUPERSEDES: 08 AUG 77

NAME: DOWEX (R) MSC-1, 20-50 MESH, NA CATION EXCHANGE RESIN

DESC: STRONG ACID CATION EXCHANGE RESIN IN THE SODIUM FORM

GOVT/IND STDS: FDA

REQUIREMENTS

ITEM	LIMIT	UNIT	METHOD
WET VOLUME CAPACITY, MIN	1.7	MEQ/ML	DOWEX RESIN MD. 1
WATER RETENTION CAPACITY	44-50	%	DOWEX RESIN MD. 4
SPHERICITY, MIN	95	%	DOWEX RESIN MD. 6
SCREEN ANAL ON NO. 16, MAX.	8	%	DOWEX RESIN MD. 5
SCREEN ANAL THRU NO. 40, MAX.	5	%	DOWEX RESIN MD. 5
COLOR THROW, APHA, AS PACKAGED, MAX.	50		DOWEX RESIN MD. 7

READ PRECAUTIONARY INFORMATION AND MATERIAL SAFETY SHEETS.
THIS PRODUCT IS SHIPPED IN COMPLIANCE WITH APPLICABLE LAWS AND
REGULATIONS REGARDING CLASSIFICATION, PACKAGING, SHIPPING AND LABELING.

(R) INDICATES A TRADEMARK OF THE DOW CHEMICAL COMPANY LAST PAGE

THE DOW CHEMICAL COMPANY QUALITY ASSURANCE OFFICE

SALES SPECIFICATION

DATE PRINTED: 05 SEP 90 PAGE: 01

PRODUCT: 23066 EFFECTIVE: 13 NOV 78 SUPERSEDES: 08 AUG 77

NAME: DOWEX (R) MSC-1, 20-50 MESH, NA CATION EXCHANGE RESIN

DESC: STRONG ACID CATION EXCHANGE RESIN IN THE SODIUM FORM

GOVT/IND STDS: FDA

REQUIREMENTS

ITEM	LIMIT	UNIT	METHOD
WET VOLUME CAPACITY, MIN	1.7	MEQ/ML	DOWEX RESIN MD. 1
WATER RETENTION CAPACITY	44-50	%	DOWEX RESIN MD. 4
SPHERICITY, MIN	95	%	DOWEX RESIN MD. 6
SCREEN ANAL ON NO. 16, MAX.	8	%	DOWEX RESIN MD. 5
SCREEN ANAL THRU NO. 40, MAX.	5	%	DOWEX RESIN MD. 5
COLOR THROW, APHA, AS PACKAGED, MAX.	50		DOWEX RESIN MD. 7

READ PRECAUTIONARY INFORMATION AND MATERIAL SAFETY SHEETS.
THIS PRODUCT IS SHIPPED IN COMPLIANCE WITH APPLICABLE LAWS AND REGULATIONS REGARDING CLASSIFICATION, PACKAGING, SHIPPING AND LABELING.

(R) INDICATES A TRADEMARK OF THE DOW CHEMICAL COMPANY LAST PAGE