Quality Control Department
Industrial Insulations
Division Headquarters
Manville Plant - 222
October 21, 1969

Librarian	-	Research
P.B. Proctor	-	Research
W.H. Snyder	-	New York
P.C. Giddings	-	New York
E.W. Korty	-	Chicago Office
C.W. Wattson	-	Detroit District
A.G. Reinker	-	Pittsburgh District
M.C. Parmley	-	Houston Office
G.B. Childers	-	Los Angeles District (ATT: Ruth Reed)
J.A. Campbell, Jr.	-	Philadelphia District
K.N. Thomson	-	St. Louis District
W.G. Bourne	-	San Francisco
R.J. Madigan	-	Tampa Office
A.B. Curtis, III	-	Long Beach
P.T. Buche	-	DHQ - New York
File		
C		

CANCELLATION

FINISHED PRODUCT SPECIFICATION

THERMOBESTOS INSULATING CEMENT

II-4324-26

Page 1 of 1, Dated 6/1/67

All fileholders are requested to cancel and remove the page of the subject Finished Product Specification. Subject page is to be destroyed except at Local and Division Headquarters Quality Control Centers and Research Library.

DBW/RJR

D.B. WINGERTER

DBW:pdi

Johns-Manville FINISHED PRODUCT SPECIFICATION	PRODUCT: THERMOBESTOS INSULATING CEMENT	DIVISION	II
		SPEC. NO.	4324-26
		PAGE NO.	1 of 1

I. MANUFACTURING POINT: Long Beach Plant

II. GENERAL DESCRIPTION:

A cement form of Thermobestos for temperatures up to 1200°F for insulating purposes.

J-M RESEARCH RECEIVED JUN 7 1967 L. R. BLAIR Refer to: WKH SEW LMM HEK FILE

III. PHYSICAL PROPERTIES:

A. Coverage (Dry) (JM Test Method II-431-9)

80 bd. ft. per 100 lbs. - minimum

B. Volume Shrinkage (JM Test Method II-431-16)

25% maximum

C. No. 4 Screen Wash (No. of pieces retained) (JM Test Method 431-8)

Ten (10) pieces maximum, none of which measure more than 1/4" in any direction.

IV. PACKAGING AND MARKING:

A. Cement shall be packaged 50 lbs. per unprinted paper bag.

B. Bag Description

Bag shall be multi-wall, 4 ply, 60 lb. kraft paper, sewn bottom open mouth, and gusseted.

Size: 10" x 25" x 46"

RETURN TO J-M RESEARCH LIBRARY (MM)

X — INDICATES CHANGE	— REASON:	To show new Test Method No's., new spec number, and to change Plant location name
AUTHORITY FOR CHANGE	D.B. Wingerter per spec audit dated 3/31/67	
SUPERSEDES:	Same page of same spec dated 1/11/60	

DIR. Q.C.	MGR. Q.C.	SUPR. Q.C.	PROD. SUPT.	PLNT. FM.	RES. (LAB)	A. Pocius	C.E. Ernst	C. Wright	DATE ISSUED	6/1/67

6/16/67

FORM 33-B PTD U.S.A.

RJR

Johns-Manville FINISHED PRODUCT SPECIFICATION	PRODUCT: THERMOBESTOS INSULATING CEMENT	DIVISION	II
		SPEC NO.	~~431-8~~ 4324-
		PAGE NO.	1.

I. MANUFACTURING POINT:

Watson

II. DESCRIPTION:

A cement form of Thermobestos for temperatures up to 1200°F for insulating purposes.

IND. INS. DEPT.
JAN 21 1960

III. PHYSICAL PROPERTIES:

A. Coverage (Dry)

J-M Test Method IN-50.6
80 board feet per 100 pounds - minimum.

B. Volume Shrinkage

J-M Test Method IN-50.7
25% Maximum

C. No. 4 Screen Wash (No. of pieces retained)

J-M Test Method II-431-8

Ten (10) pieces maximum, none of which measure more than 1/4" in any direction.

IV. PACKAGING AND MARKING:

A. Cement shall be packaged 50 pounds per unprinted paper bag.

X B. Bag Description

Bag shall be multi-wall, 4 ply, 60 lb. kraft paper, sewn bottom open mouth, and gusseted.

Size: 10" x 25" x 46"

RETURN TO
J-M RESEARCH
FILE ROOM

JCR 1/22/60

X— INDICATES CHANGE —REASON: To show use of slightly larger bag

AUTHORITY FOR CHANGE E. C. Lindstrom per T. G. Fuller's letter of 10/7/59

SUPERSEDES: Page 1 same specification issued 7/22/59

DIR. Q.C.	MGR. Q.C.	SUPR. Q.C.	PROD. SUPT.	PLNT. FN.	RES. LAB.	COM. MGR.	C. A. de Vyver	W. D. Gaches	DATE ISSUED 1/21/60

Form 333-5 Ptd. in U.S.A.

Johns-Manville FINISHED PRODUCT SPECIFICATION	PRODUCT: THERMOBESTOS INSULATING CEMENT	DIVISION	II
		SPEC NO.	431-8
		PAGE NO.	1.

IN... DEPT.
OCT 13 1959

I. MANUFACTURING POINT:

Watson

II. DESCRIPTION:

A cement form of Thermobestos for temperatures up to 1200°F for insulating purposes.

III. PHYSICAL PROPERTIES:

A. Coverage (Dry)
J-M Test Method IN-50.6
80 board feet per 100 pounds - minimum.

B. Volume Shrinkage

J-M Test Method IN-50.7
25% Maximum

CANCEL

C. No. 4 Screen Wash (No. of pieces retained)

J-M Test Method II-431-8

Ten (10) pieces maximum, none of which measure more than 1/4" in any direction.

IV. PACKAGING AND MARKING:

A. Cement shall be packaged 50 pounds per unprinted paper bag.

X

B. Bag Description

Bag shall be multi-wall, 4 ply, 60 lb. kraft paper, sewn bottom open mouth, and gusseted.
Size: 10" x 25" x 46".

PCR 11/30/59

RETURN TO J-M RESEARCH FILE ROOM

X— INDICATES CHANGE	—REASON: To show use of slightly larger bag
AUTHORITY FOR CHANGE	E.C. Lindstrom per T.G. Fuller's letter of 10/7/59
SUPERSEDES:	Page 1 same specification issued 7/22/59

DIR. Q.C.	MGR. Q.C.	SUPR. Q.C.	PROD. SUPT.	PLNT. FN.	RES. LAB.	COM. MGR.	C.A. de Vyver	W.D. Gaches	DATE ISSUED 10-22-59

Form 333-5 Ptd. in U.S.A.

Johns-Manville FINISHED PRODUCT SPECIFICATION	PRODUCT: THERMOBESTOS INSULATING CEMENT	DIVISION	II
		SPEC NO.	431-8
		PAGE NO.	1.

I. MANUFACTURING POINT:

X Watson

CANCELLED

II. DESCRIPTION:

A cement form of Thermobestos for temperatures up to 1200°F for insulating purposes.

III. PHYSICAL PROPERTIES:

A. Coverage (Dry)

J-M Test Method IN-50.6
80 board feet per 100 pounds - minimum.

IND. INS. DEPT.
JUL 30 1959

B. Volume Shrinkage

J-M Test Method IN-50.7
25% Maximum

C. No. 4 Screen Wash (No. of pieces retained)

J-M Test Method II-431-8

Ten (10) pieces maximum, none of which measure more than 1/4" in any direction.

IV. PACKAGING AND MARKING:

A. Cement shall be packaged 50 pounds per unprinted paper bag.

B. Bag Description

X Bag shall be three ply (1 asphalt liner, 1-50 pound Natural Kraft, 1-60 pound Wet Strength), sewn bottom, open mouth and gusseted. Size: 8" x 22" x 57".

RE...
J-M RESEARCH
FILE ROOM

QCR 7-30-59

X— INDICATES CHANGE —REASON: Deletion of Manville as a manufacturing location

AUTHORITY FOR CHANGE E.C. Lindstrom per A. Pocius's letter of 7/10/59 to H.B. Coyle

SUPERSEDES: Page 1 same specification issued 4/1/57

DIR. Q.C.	MGR. Q.C.	SUPR. Q.C.	PROD. SUPT.	PLNT. FN.	RES. LAB.	COM. MGR.	C.A. de Vyver	W.D. Gaches	DATE ISSUED 7-22-59

Form 333-5 Ptd. in U.S.A.

I. MANUFACTURING POINT:

Manville and Watson

DESCRIPTION:

A cement form of Thermobestos for temperatures up to 1200°F. for insulating purposes.

III. PHYSICAL PROPERTIES:

A. Coverage (dry)

J-M Test Method IN 50.6
80 board feet per 100 pounds - minimum.

B. Volume Shrinkage

J-M Test Method IN 50.7
25% Maximum

C. No. 4 Screen Wash (No. of pieces retained)

J-M Test Method II 431-8

Ten (10) pieces maximum, none of which measure more than 1/4" in any direction.

IV. PACKAGING AND MARKING:

A. Cement shall be packaged 50 lbs per unprinted paper bag.

B. Bag Description

1. Manville

Bag shall be multi-wall, 4-60 lb., paper ply, sewn bottom, open mouth, and gusseted.
Size: 10" x 25" x 46"

2. Watson
Bag shall be three ply (1 asphalt liner, 1-50 lb Natural Kraft, 1-60 lb Wet Strength), sewn bottom, open mouth and gusseted.
Size: 8" x 22" x 57"

RETURN TO RESEARCH FILE ROOM

X — INDICATES CHANGE — REASON: Bag Change

AUTHORITY FOR CHANGE — Regular Approvals plus 010-RFA-8 (Manville) and RFA-1 (Watson)

FILE-HOLDERS	C.A. de Vyver	M.W. Burleson		IND. ENG.	PROD. SUPT.	PLANT FINANCE OFFICE	RESEARCH LAB.	DIR. QUAL. CONTROL	MGR. QUAL. CONTROL	SUPR. QUAL. CONTROL

SUPERSEDES: Page 1, same Spec. issued 1-30-57

DATE ISSUED 4-1-57

FINISHED PRODUCT SPECIFICATION

INSULATIONS DIVISION

THERMOBESTOS INSULATING CEMENT

SPEC. NO. 431-8

PAGE NO. 1

I. MANUFACTURING POINT:

Manville

CANCELLED

II. DESCRIPTION:

A cement form of Thermobestos for temperatures up to 1200°F. for insulating purposes.

III. PHYSICAL PROPERTIES:

A. Coverage (dry)

J-M Test Method IN 50.6
80 board feet per 100 pounds - minimum.

B. Volume Shrinkage

J-M Test Method IN 50.7
25% Maximum

C. No. 4 Screen Wash (No. of pieces retained) *

Ten (10) pieces maximum, none of which measure more than 1/4" in any direction.

*See Research Report #433-137, dated 4/22/55, for test method.

IV. PACKAGING AND MARKING:

A. Cement shall be packaged 50 lbs. per used burlap bag.

B. Bags are closed by sewing.

C. Combination Product shipping tag No. T-126 shall be attached to each bag at the closure.

RETURN TO

X— INDICATES CHANGE —REASON: Name Change

AUTHORITY FOR CHANGE — Regular Approvals

FILE-HOLDERS	C. A. de Vyver	M. W. Burleson		IND. ENG.	PROD. SUPT.	PLANT FINANCE OFFICE	RESEARCH LAB.	DIR. QUAL. CONTROL	MGR. QUAL. CONTROL	SUPR. QUA CONTROL

SUPERSEDES: Page 1, same Spec. issued 12/14/56

DATE ISSUED 1/30/57

FORM 5013-7A PRINTED IN U.S.A.

JOHNS-MANVILLE CORPORATION

FINISHED PRODUCT SPECIFICATION

INSULATIONS DIVISION

THERMOBESTOS PLASTIC CEMENT

432

SPEC. NO. 431-8

PAGE NO. 1.

I. MANUFACTURING POINT:

Manville

4,157

II. DESCRIPTION:

A cement form of Thermobestos for temperatures up to 1200° F. for insulating purposes.

III. PHYSICAL PROPERTIES:

A. Coverage (dry)

J-M Test Method IN 50.6
80 board feet per 100 pounds - minimum.

B. Volume Shrinkage

J-M Test Method IN 50.7
25% Maximum

C. No. 4 Screen Wash (No. of pieces retained) *

Ten (10) pieces maximum, none of which measure more than 1/4" in any direction.

* See Research Report #433-137, dated 4/22/55, for test method.

IV. PACKAGING AND MARKING:

A. Cement shall be packaged 50 lbs. per used burlap bag.

B. Bags are closed by sewing.

C. Combination Product shipping tag No. T-126 shall be attached to each bag at the closure.

RETURN TO ... RESEARCH ...

X - INDICATES CHANGE - REASON: New specification

AUTHORITY FOR CHANGE - Regular Approval.

FILE-HOLDERS	C. A. de Vyver	M. W. Burleson								

SUPERSEDES: Page 1, same Spec. issued Proposed 9/24/56.

DATE ISSUED 12/14/56

FORM 5013-7 PRINTED IN U.S.A.

Manville - Ind. Insulations
August 30, 1962

P.B.Proctor, GHQ
E.C.Lindstrom, DHQ
R.K.Hoagland
S.Bonet
H.L.Pierson
A.W.Jung
Librarian, Res. Center
W. Bielanowski
J. Ganski
L. Heinrich

Cancellation of Manufacturing Specs.

The following listed specifications are no longer applicable at Manville and should be cancelled:

		Page No.	Date
CT-130.5	Plastiseal F Cement	1	11/1/55
MG-31	Lagging Hooks	1	10/22/53
MG-41	Metal-On Stainless Steel Bands	1	10/7/60
PC-0	Flow Chart	1	5/25/46
PC-12	Canvas Jackets	1	4/14/58
		2	2/21/56
		3	9/3/52
PC-69:8	Perlox Expanded Perlite	1	3/31/60
PC-102	Starch Paste Solution	1	6/1/51
PC-106	Strip Coating	1	12/12/49
PC-126	Fire Felt Brake Blocks	1	5/14/59
PC-231	AF Amosite Felts	1	2/5/58
		2	2/5/58
		3	2/5/58
PC-252	Chlor-O-Cel	1	5/21/43
256	KB Paper Tubes	1	7/11/39
RF-5	Cerapac SPPI Interim Spec. GE Only	1	1/22/58
T/BL-10072	Elbow - Exhaust Pipe, Part No. C-7356426	1	3/15/52
		2	3/15/52
T/BL-10073	All Inconel Tadpole Gasketing	1	11/6/53
		2	11/6/53
TH-2	Thermobestos Plastic Cement	1	7/20/56
WF-1	Willowed Fibers, Williams Crusher	1	5/27/59

Please cancel the Manville Manufacturing Specifications listed above and remove all cancelled pages from your active files.

R.W.Honnig

DP:lk

Manville PLANT		PAGE NO.
Magnesia DEPT.	Thermobestos Plastic Cement 432	1

FORMULA:

Thermobestos Trim and Defective Material

MANUFACTURING INSTRUCTIONS:

1. Use Jeffrey Hammer Mill, cyclone and bagging equipment.

   Note: clean equipment when changing from other cements to Thermobestos Cement.

2. Bag as follows:

   a. Pack 50 lbs. per burlap bag.

   b. Lap top of bag and sew with jute twine.

   c. Attach tag stencilled:

      Thermobestos Cement
      50 Lbs.

CONTROL TESTS:

Wet Coverage: (bd.ft./100 lb.)

X J-M Test Method IN-50.6 - 90-100

No. 4 Screen Wash: (Number of pieces Retained)

Test Method as per Research Report #433-137 - 10 Max.

RETURN TO J-M RESEARCH FILE ROOM

X—INDICATES CHANGE — REASON: Change in Wet Coverage

AUTHORITY FOR CHANGE — Letter of E.C. Lindstrom to S. Bonet dated 7/18/56.

FILE-HOLDERS	Watson	Ind.Engr.	WKG.	Control Lab.	SUPR. QUAL. CONTROL	PROD. SUPT.	PLANT FINANCE OFFICE	RESEARCH LAB.	MGR. QUAL. CONTROL	DIR. QUAL. CONTR

SUPERSEDES: Same specification issued 10/18/55

DATE ISSUED JUL 20 195

FORM 50132-10
PRINTED IN U.S.A.

MANVILLE PLANT / MAGNESIA DEPT.	Thermobestos Plastic Cement 43Y	TH-2 PAGE NO. 1

FORMULA:

Thermobestos Trim and Defective Material

MANUFACTURING INSTRUCTIONS:

1. Use Jeffrey Hammer Mill, cyclone and bagging equipment.

   Note: Clean equipment when changing from other cements to Thermobestos Cement.

2. Bag as follows:

   a. Pack 50 lbs. per burlap bag.

   b. Lap top of bag and sew with jute twine.

   c. Attach tag stenciled:

CANCELLED 7/20/12

Thermobestos Cement
50 Lbs.

CONTROL TESTS:

Wet Coverage: (bd.ft./100 lb.)

J-M Test Method IN-50.6 - 117-122

No. 4 Screen Wash: (Number of Pieces Retained)

Test Method as per Research Report #433-137 - 10 Max.

RETURN TO
J-M RESEARCH
FILE ROOM

X—INDICATES CHANGE — REASON: New Specification.

AUTHORITY FOR CHANGE: Prod. Prop. 433-23 Summary. Letter of H.J. O'Brien to H.E. Bird dated 8/4/55.

FILE-HOLDERS	WATSON	IND.ENGR.	WAUKEGAN	CONTROL LAB.	SUPR. QUAL. CONTROL	PROD. SUPT.	PLANT FINANCE OFFICE	RESEARCH	MGR. QUAL. CONTROL	DIR. QUAL. CONTRO

SUPERSEDES: None. Enter in index and file in numerical order. 10/21/55

DATE ISSUED OCT 18 1955

FORM 80132-10
PRINTED IN U.S.A.

MASTER FILE COPY

Report No. 433-137
Problem No. 991-423-3600
April 22, 1955

Johns-Manville Research Center
Manville, New Jersey

RECEIVED
APR 28 1955
E. R. WILLIAMS

THERMOBESTOS PLASTIC CEMENT

Requested by: M. W. Burleson

I. SUMMARY

The investigation of the suitability of all new process blocks as an insulating cement was the original objective of this investigation. This phase of the work has been taken over by the Magnesia Section.

The preliminary phases of the work showed almost immediately that suitably milled Thermobestos scrap had an excellent potential as an insulating cement. The International Division requested samples for shipment to one of their South American associates that uses the plastic in place of both pipe insulation and block.

This report is being issued primarily to supply information to the plant on the milling of Thermobestos scrap, the properties to be expected of it, and suitable control procedures.

A blend of the Thermobestos scrap and bentonite made a considerably superior insulating cement but it is being included in this report primarily as a matter of record. The main objective is to permit the milling and marketing of straight Thermobestos scrap with no additives.

For detailed properties, please see Section III.

(Original notes in Research Notebook No. 540, pp 53 - 84) Ref. IR-447

APPROVED W. L. Stafford REPORTED BY J. F. Palochko

This report consists of:

I. SUMMARY
II. INTRODUCTION
III. PRODUCT PROPERTIES
IV. MANUFACTURING INSTRUCTIONS
V. DISCUSSION
APPENDIX A. FINISHED PRODUCT SPECIFICATIONS AND CONTROL TESTS

ao

I. SUMMARY (continued)

Copy to:
C. F. Rassweiler, GH
M. W. Burleson, GH (I, II, III, V)
R. C. Parlett, GH (I, II, III, V, I)
P. D. Cannon, DH
W. L. Van Derbeek, DH
I. E. Cary, GH
E. C. Lindstrom, DH
H. J. O'Brien, Manville
Att: J. W. Reeder
J. R. Robson, Manville
R. Jacobs, Manville
H. E. Richards, Manville
F. L. Hess, Manville
T. H. Eaton, Watson
E. R. Williams ←
A. B. Cummins
J. C. Rademaker
W. M. MacAlpine
File: 4336
J Magee, DHQ - 3/10/57 (Loan)
Legal Jan 1985

II. INTRODUCTION

This exploratory work was requested by M. W. Burleson to determine whether the Thermobestos plastic is a suitable base for a cement.

Correspondence on the subject included:

M. W. Burleson's letter to W. L. Stafford	-	12/6/54
M. W. Burleson's Memorandum for File	-	1/4/55

III. PRODUCT PROPERTIES

Thermobestos plastic when suitably mixed with water trowels readily; dries to a crack-free surface; is light gray in color and is comparable in hardness to present magnesia cement. The product can be mixed with water and applied to pipes for insulating them with what was considered satisfactory results. Its trowellability and hardness may be improved by the addition of 10 per cent bentonite which also results in a slight decrease in coverage. The tabulated plastics were prepared as described in IV.— Manufacturing Instructions.

	New Process Magnesia Plastic	Thermobestos* Plastic	Thermobestos Plastic with 10% bentonite
Water used, %	450	600	530
Wet coverage (bd ft/100 lb)	94.5	119.0	107.0
Dry coverage (bd ft/100 lb)	73.3	94.8	82.7
Volume shrinkage, %	22.4	20.7	22.9
Modulus of rupture, psi	20.9	13.4	68.4
Hardness (BHN x 1000)	54.5	41.0	109.5

*The recommended product.

IV. MANUFACTURING INSTRUCTIONS

A satisfactory Thermobestos plastic, suitable for utilization as a cement, was prepared in the laboratory by milling the Thermobestos block insulation in a Jeffrey swing hammer pulverizer (see sketch). This mill is useful for the processing of Thermobestos plastic as it readily reduces the material to the required fineness in one pass.

The product collector used for the processing was designed to automatically separate the material into coarse and a very fine fraction. These separations were thoroughly mixed together before testing as a cement. In a plant manufacturing process, there would be no need for separations so the material may be collected ready for bagging. The magnesia plastic export bag contained only 40 lb of the product because of its lightness.

JEFFREY JUNIOR TYPE A SWING HAMMER PULVERIZER

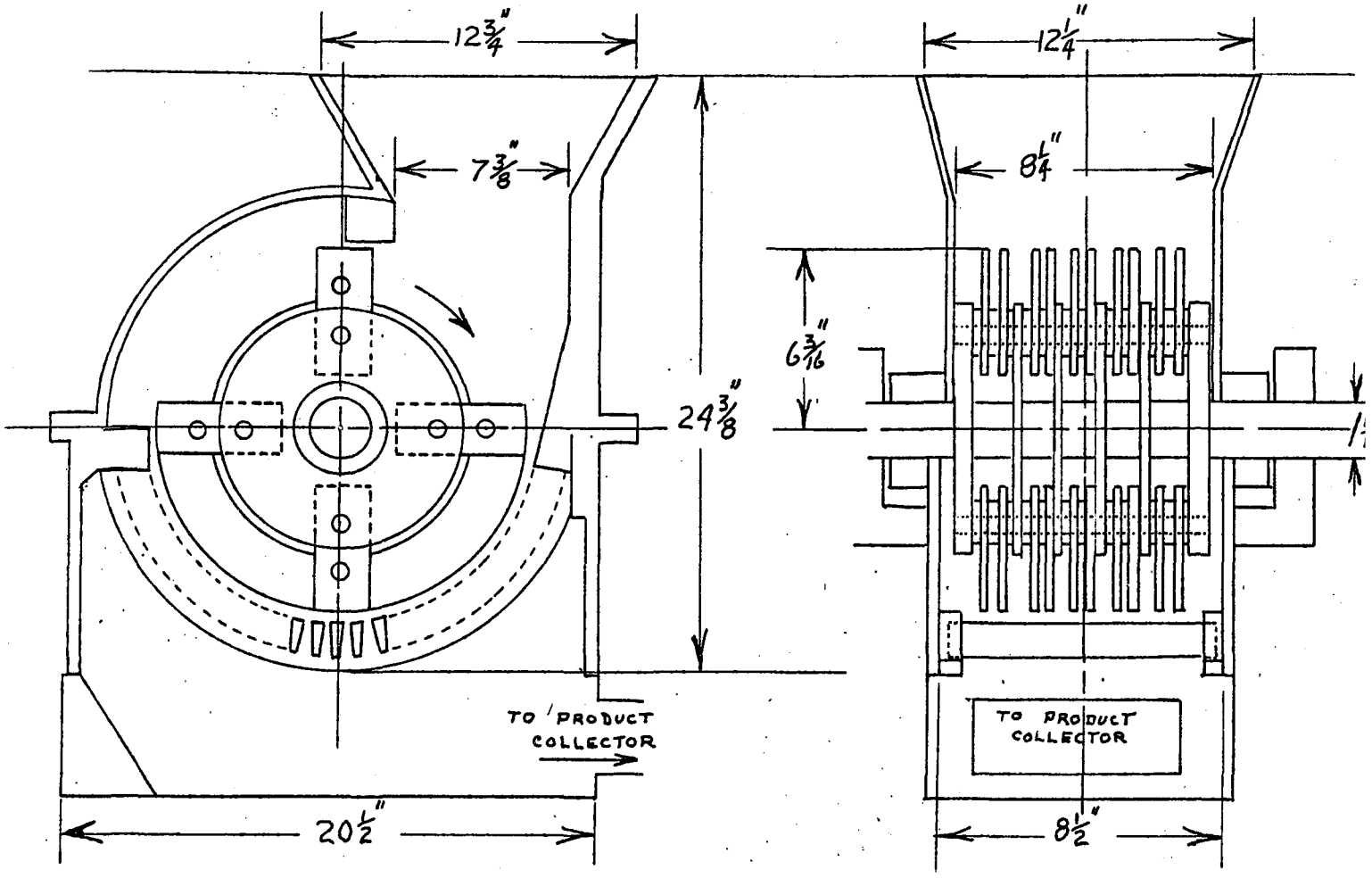

Listed in Jeffrey Catalog No. 837 as a 15" x 8" machine.

IV. MANUFACTURING INSTRUCTIONS (continued)

Table I

Approximate speed, capacity and power for Jeffrey Junior Type A Pulverizer when reducing Thermobestos to plastic.

Size of Machine	H.P.	Hammer Tip Speed ft / min	Air Flow cu ft / min	Impacts per min	Capacity through ¼" screen bar opening	Hammer Size
15" x 8" (1)	7½ (4)	10,416	270 - 320 (5)	12,800 (2)	600 - 800 lb/hr	5 x 2¼ x ¼" (3)

(1) As listed in Jeffrey Catalog No. 837.
(2) Number of rows of hammers x rpm.
(3) Arranged in pairs as shown in sketch.
(4) The pulverizer was driven by a 7½ hp 440 volt 3 phase electric motor pulling 13 amperes at full load. The motor drew 6 amperes when operating the hammer mill unloaded and showed no significant increase in current when the Thermobestos was being reduced.
(5) This was the approximate volume of air being drawn into the product collector when no material was being milled. This measurement was taken with an Alnor Velometer at the area through thich the Thermobestos was fed for milling.

The information in Table II is listed to present a general guide in relation with the data in Table No. I. when considering the size of the mill that might be utilized for the production of Thermobestos plastic cement.

Table II

Speeds, capacities and power of Type A Pulverizer when reducing other materials similar to Thermobestos.

Size of Machine	Approx. H.P.	Speed rpm	Capacities - Tons per Hour			
			Gypsum		Alum Cake	
			1/8" Bar Opening	1" Bar Opening	1/8" Bar Opening	1" Bar Opening
15 x 8"	7 to 10	2000 to 3000	1 to 1½	1½ to 2	¾ to 1	2 to 3
20 x 12"	12 to 15	1500 to 2000	2 to 3	3 to 5	1½ to 2½	4 to 5
24 x 18"	20 to 25	1400 to 1800	3½ to 5	6 to 8	3 to 4	8 to 10
30 x 24"	30 to 40	1100 to 1450	8 to 10	14 to 16	6 to 8	15 to 20
36 x 24"	50 to 60	900 to 1200	12 to 15	20 to 25	10 to 12	30 to 35
36 x 30"	65 to 75	900 to 1200	18 to 20	30 to 35	15 to 18	40 to 45
36 x 36"	75 to 100	900 to 1200	22 to 25	35 to 45	20 to 25	50 to 60

This information was exerpted from Jeffrey Catalog No. 837.

V. DISCUSSION

The Thermobestos plastic can be utilized as a satisfactory cement. However, a more easily trowellable and harder cement may be produced by the addition of 10 per cent bentonite. (See III - Product Properties) The addition of 10 per cent bentonite decreases the dry coverage by 13 per cent but produces a product having five times its original transverse strength and two and one-half times harder. Depending on the properties that are desired from this type of product, either cement will be satisfactory.

APPENDIX A - Finished Product Specifications and Control Tests for Thermobestos Plastic

The evaluations shown were proposed on an interim basis and should be verified by production experience before being finalized.

Finished Product Specifications:		JM Test Method
Dry coverage (bd ft / 100 lb)	90.0 min	IN-50.6
Volume shrinkage, %	25.0 max	IN-50.7
Proposed Control Tests:		
Wet coverage (bd ft / 100 lb)	117.0 - 122.0	IN-50.6
No. 4 screen wash (number of pieces retained)	10 max	(see description of method)

Description of No. 4 Screen Wash Test Method:

Apparatus:

(1) 1000 c.c. graduate
(2) 2000 c.c. beaker
(3) spatula
(4) No. 4 mesh screen
(5) pan large enough to allow agitation of screen when partly submerged in water

Specimen:

25 gram sample of Thermobestos plastic

Procedure: Fill pan with water. Disperse the specimen in 2000 c.c. of water in beaker. Stir with spatula for 5 - 10 seconds. Hold the No. 4 mesh screen so that wire is submerged in the water in the pan and slowly pour the dispersed specimen into the screen being careful not to overflow the screen. Shake the screen with an up and down motion to allow the finer particles to escape, always keeping the screen partly submerged in the water. Continue shaking for at least one minute but not more than two minutes. Remove from the screen the hard particles only.

Any fiber or soft particles that would flow smoothly under the trowel should be disregarded and not considered as insufficiently milled material. Count the number of hard particles that remain on the sieve and report.

Johns-Manville Research Center

Report No. 433-137-S2

Date June 18, 1956

Title: THERMOBESTOS PLASTIC CEMENT. Addition of Portland Cement to Produce a Hard Finishing Coat

Requested by: I. E. Cary

RECEIVED
JUN 21 1956
E. R. WILLIAMS

SUMMARY

A 7:1 volume ratio of Thermobestos plastic cement and Portland cement resulted in a hard finishing cement that trowelled readily, had excellent adhesion to plain Thermobestos cement, and dried to a crack-free, light gray, speckled surface. The specks were due to the coarse particles that were contained in the Thermobestos plastic cement. The 7:1 volume ratio is equivalent to a weight ratio of two parts Portland cement and one part Thermobestos plastic cement.

Contents: Summary

Approved by W. L. Stafford

Reported by J. F. Palochko

dvp

Copy to:
C. F. Rassweiler, GH (+S)
S. Collier, GH
I. E. Cary, GH
T. H. Eaton, DH
E. C. Lindstrom, DH
R. C. Parlett, DH (+S)
M. W. Burleson, DH
R. C. Clinchy, DH
S. Bonet, Manville
R. Jacobs, Manville
E. R. Williams (+S)
W. L. Stafford (IR-447)
J. F. Palochko
File 4336:
W. M. MacAlpine (+S)
Library (5)
C
Legal, Jan, 1985

Notebook No. 540, p 132

Johns-Manville Research Center

Report No. 433-137-S1

Date October 10, 1955

Title: THERMOBESTOS PLASTIC CEMENT. PHYSICAL CHANGE AT 1200F

Requested by: M. W. Burleson

SUMMARY

Suitably milled Thermobestos plastic cement manufactured according to instructions contained in Research Report No. 433-137 was subjected to ~~five~~ 24 hours of soaking heat at 1200F.

The test showed the cement had a volume shrinkage of 3.0 ~~per cent~~%; a linear shrinkage of 1.0 ~~per cent~~%; and a weight loss of 15.5 ~~per cent~~%.

Contents: Summary

Approved by W. L. Stafford Reported by J. F. Palochko

cag

cc: C. F. Rassweiler, GH
M. W. Burleson, GH
R. C. Parlett, GH (2)
P. D. Cannon, DH
W. L. VanDerbeek, DH
I. E. Cary, GH
E. C. Lindstrom, DH
H. J. O'Brien, Manville
J. R. Robson, Manville
R. Jacobs, Manville
H. E. Richards, Manville
F. L. Hess, Manville
T. H. Eaton, Watson
E. R. Williams
A. B. Cummins
J. C. Rademaker
W. M. MacAlpine
W. L. Stafford
J. F. Palochko
File: 43322
(IR-447)

Notebook 540, p 96

Research Center
June 3, 1955

File: 433-PP

J. E. Begert, GH
E. R. Williams
C. A. deVyver, DH
P. D. Cannon, DH
J. S. Crawford, GH
D. T. Colton, Int.
E. T. Rosseau, Int.
I. E. Cary, Int.

Product Proposal No. 433-PP-23
Thermobestos Plastic Cement

RECOMMENDATION

It is recommended that Thermobestos Plastic Cement be manufactured at both Manville and Watson plants in accordance with the manufacturing instructions contained in Research Report No. 433-137.

REASONS FOR RECOMMENDATION

It has been determined that suitably milled Thermobestos scrap alone has working properties comparable with those of magnesia plastic. With suitable additions it makes an excellent insulating cement. This Product Proposal is being issued primarily to clear the sale of the straight Thermobestos scrap to foreign countries. It may later be advisable to market it domestically.

PROPERTIES OF THE PRODUCT

Thermobestos Plastic Cement troweled readily, had a dry covering capacity of 90 to 95 bd ft per 100 lb, and produced satisfactory results when applied to pipes as insulation. Complete properties are contained in Research Report No. 433-137.

NEW RAW MATERIALS

None

MANUFACTURING PROBLEMS

None expected

HEALTH HAZARDS

None

VITAL CONTROL POINTS

The following control tests contained in Research Report No. 433-137 were proposed on an interim basis only and should be verified by production experience before being finalized:

(1)	No. 4 screen wash (number of pieces retained)	10 maximum
(2)	Wet coverage (bd ft per 100 lb)	117.0 - 122.0

EQUIPMENT REQUIRED AND COST

A grinding mill of the general type shown in Research Report No. 433-137 will be needed to adequately handle the new process molded material. Manville plant estimates an installed cost of about $5,000.

PRODUCT COST

The estimated cost for the recommended product obtained from Manville plant (H. J. O'Brien's letter of April 12, 1955 to C. LaGattuta) was $1.377 per 50-lb bag.

J. F. Palochko

W. L. Stafford

dvp

Copy to:
J. F. Rassweiler, GH
G. S. Smith, GH
S. Collier, GH
A. J. Kroll, GH
W. J. Reynolds, GH
B. Jarne Asper, Int.
J. M. Miller, Int.
F. J. Wakem, DH
E. C. Lindstrom, DH
M. W. Burleson, DH
R. C. Clinchy, DH
H. J. O'Brien, Manville
F. L. Hess, Manville
E. G. Carlson, Manville
Attn: J. W. Reeder
J. R. Robson, Manville
H. E. Richards, Manville
H. Ponisi, Manville
R. Jacobs, Manville
T. H. Eaton, Watson
W. M. O'Connor, Watson
A. Harris, Watson
R. H. Perow, Watson
W. R. Kaufman, Watson
A. M. Axtel, Watson
V. C. Kline
A. B. Cummins
Attn: J. C. Rademaker
P. H. Soroka
W. M. MacAlpine

Legal Jan. 1985

General Headquarters
July 27, 1955

Summary
Product Proposal Research 433-PP-23
Thermobestos Plastic Cement

COMMENTS - The attached copies of this letter are for the Manville plant, together with your instructions. Specifications should be prepared accordingly.

J. E. BEGERT

BY: H. S. ALLEN

HSA:gc
cc
C. F. Rassweiler
K. W. Huffine
W. R. Wilkinson
D. T. Colton
J. A. O'Brien
E. C. Brockett, Tor.
R. R. Waddington (2)
E. T. Rousseau
G. S. Smith
S. Collier
V. C. Kline, Res.
A. C. Smith, Res.
J. H. Seltzer
E. A. Adey
C. Southal
J. S. Crawford
E. C. Lindstrom
W. L. VanDerbeek
F. J. Wakem
E. H. Wells
C. A. deVyver
M. W. Burleson
I. E. Cary
F. A. H. Gallop, Tor.
L. M. Adamson, Tor.
E. H. Thring, Tor.
E. R. Williams, Res.
P. H. Soroka, Res.
W. M. MacAlpine, Res.
A. B. Cummins, Res.
H. J. O'Brien, Mvl.
J. W. Reeder, Mvl.
J. R. Robson, Mvl.
R. Jacobs, Mvl.
H. E. Richards, Mvl.
H. Ponisi, Mvl.
F. L. Hess, Mvl.
W. J. Reynolds
R. S. Gardner, Tor.
J. D. Lowry, Tor.
J. E. Morrison, Asb.
File: 433-R2b-104

Legal Jan. 1985

RECEIVED
AUG 1 1955

General Headquarters
July 27, 1955

P. D. Cannon, Att: C. LaGattuta

Summary
Product Proposal Research 433-PP-23
Thermobestos Plastic Cement

STATEMENT OF AGREEMENT - The manufacture of Thermobestos Plastic Cement in accordance with the manufacturing instructions contained in Research Report 433-137 has been approved as recommended.

It has been determined that suitably milled Thermobestos scrap alone has working properties comparable to magnesia plastic. This product is primarily to meet the requirements for the sale of straight Thermobestos scrap to foreign countries. It may be determined advisable at a later date to market this product domestically.

LOCATION AND VOLUME INVOLVED - Manville Industrial Products plant. Annual sales of approximately $25,000 are anticipated from sales abroad.

MANUFACTURING PROBLEMS, EQUIPMENT REQUIRED AND COST - No manufacturing problems are anticipated.

Vital Control Points - The following control tests contained in Research Report 433-137 should be verified by production experience before being finalized:

1.	No. 4 screen wash (number of pieces retained)	10 maximum
2.	Wet coverage (bd ft per 100 lb)	117.0 - 122.0

A grinding mill is required to adequately handle the new process material. This has been approved on June 27, 1955 under Appropriation 931-R-0490 in the amount of $4,433.

PROPERTIES OF THE PRODUCT - Thermobestos Plastic Cement trowels readily has a dry covering capacity of 90 to 95 bd feet per 100 lb. and produces satisfactory results when applied to pipes as insulation. Detailed product properties are described in Research Report 433-137 Section III.

NEW RAW MATERIALS INVOLVED - None.

EFFECT ON GROSS PROFIT - Additional annual gross profit of $7,500 is anticipated.

RESEARCH OR OTHER REPORTS - 433-137.