PLAINTIFF'S EXHIBIT

CT-1555

CertainTeed

A/C Storm Sewer Piping Products

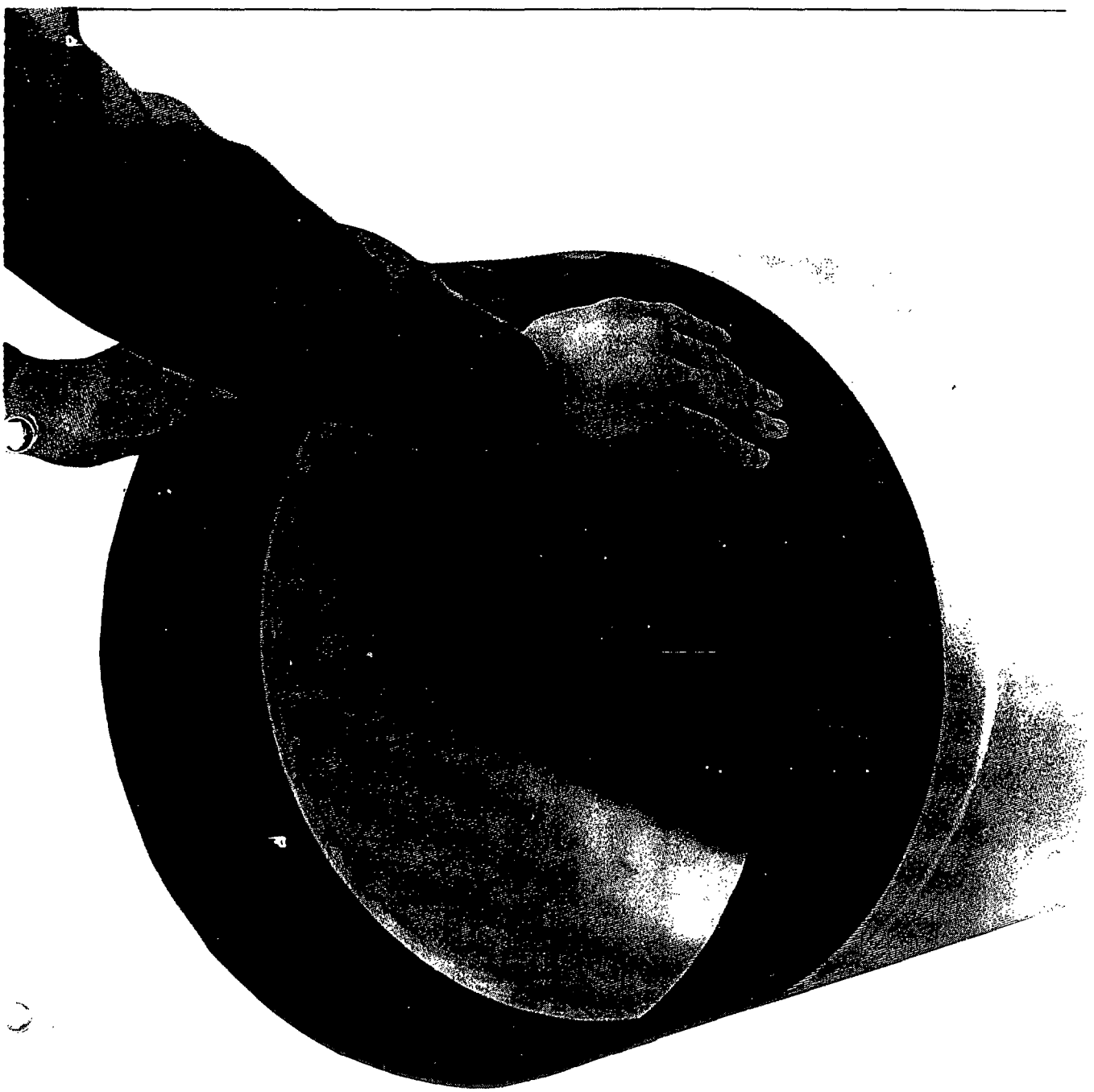

A/C
Storm Sewer
Piping Products

CertainTeed Storm Sewer Pipe speeds installation, fights corrosion.

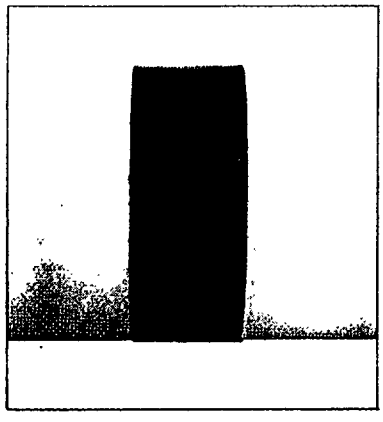

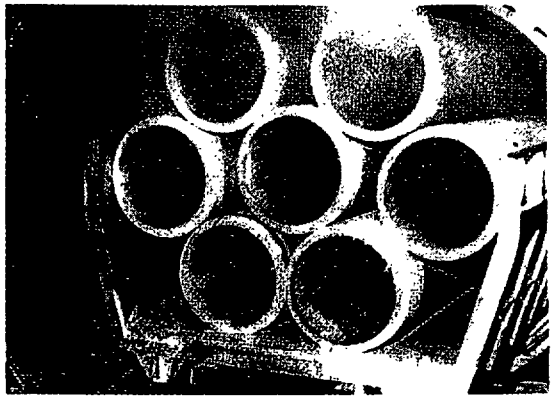



Made to be Tough.

CertainTeed A/C Storm Sewer Pipe is manufactured from a mixture of portland cement, asbestos and silica. The pipe made from this mixture is dense and tough, non-organic, and immune to electrolytic and galvanic effects. It is highly resistant to chemical attack and corrosion of all types. In the manufacturing process, the pipe is formed under heavy pressure for high density and strength, and is autoclave-cured for chemical stability.

CertainTeed Storm Sewer Pipe meets all requirements of ASTM C663, AASHTO Designation M-217, and Section 64 of the California Division of Highways standards.

CTD001457

CertainTeed

For Storm Drainage Systems Anywhere.

Install CertainTeed Storm Sewer Pipe wherever reliable storm drainage is required. Applications include highways, roads, urban streets, institutional grounds, airports, parking lots and other paved areas.

Flexible Couplings for Quicker, Better Installation.

CertainTeed A/C Storm Sewer Pipe is joined with flexible plastic couplings. As a result, there's no need to grout the joints. Assembly time is reduced and backfilling can proceed immediately. Joints can deflect for curved-line installations. And because the couplings are designed to seal in water and keep out sand and silt, there's less chance of bedding material being washed out. This helps protect the pipe's structural integrity.

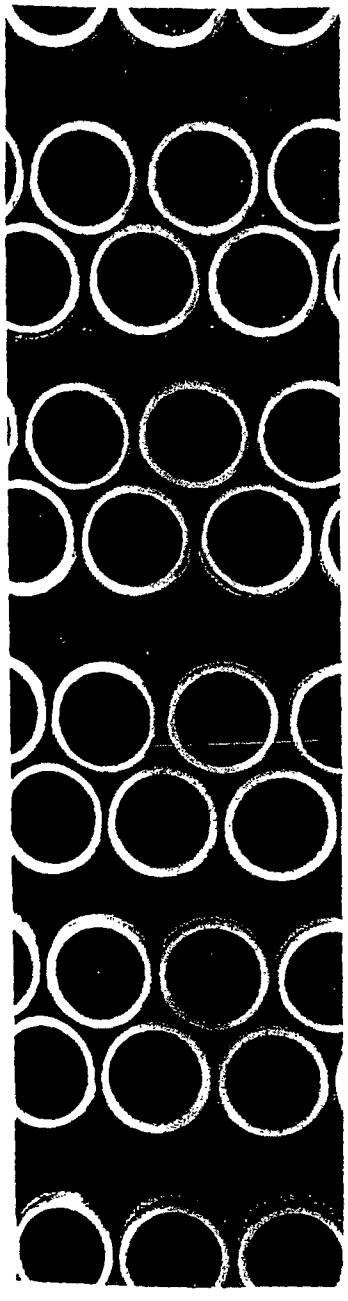

Extra Capacity with Smaller Pipe.

With its smooth interior surface, CertainTeed Storm Sewer Pipe has a Manning flow coefficient of n=0.010, providing extra capacity with smaller pipe diameters, and reducing the chance of blockage. It can be installed on flatter grades with assurance of efficient drainage. Its relatively light weight in long lengths permits easier handling and reduced installation costs.

Full Range of Sizes, Full Line of Fittings.

CertainTeed A/C Storm Sewer Pipe is made in diameters from 6" through 24", in standard 13' lengths, and in strength classifications lbs./ft. of dia./lin. ft. of 2000D, 2500D, 3000D and 3750D. Fittings include wyes, tees and 45° and 90° elbows.

CTD001458

A/C
Storm Sewer
Piping Products

Pipe Weights (Lbs./Ft.)

Size	2000D	2500D	3000D	3750D
6	-	-	-	9.3
8	-	-	12.2	12.2
10	17.7	18.6	18.6	22.0
12	21.1	25.2	26.1	29.2
14	29.9	33.9	35.3	40.4
15	33.9	38.6	41.5	45.5
16	39.3	43.8	46.5	52.7
18	46.8	53.2	59.1	66.2
20	58.9	65.3	71.5	80.0
21	66.2	71.1	78.6	87.5
24	87.7	94.7	101.0	116.0

Pipe Dimensions

Pipe Size	All Classes C	All Classes P
6-8	2.40	1.00
10	2.90	1.00
12-14-15-16	3.13	1.50
18-20-21	4.00	1.88
24	4.88	2.25

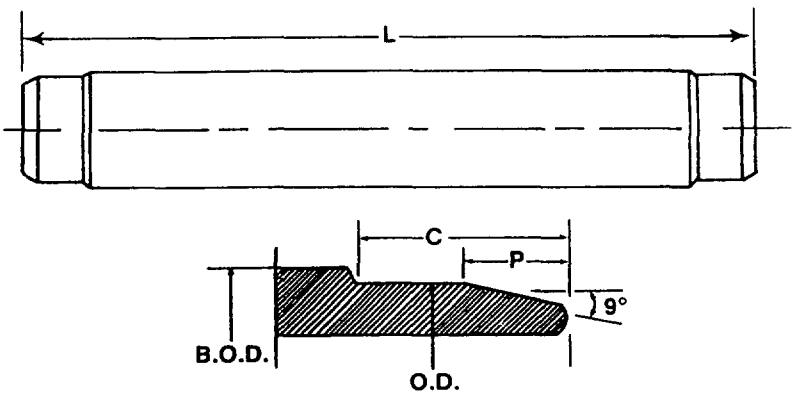

Pipe Size	2000D O.D.	2000D B.O.D.	2500D O.D.	2500D B.O.D.	3000D O.D.	3000D B.O.D.	3750D O.D.	3750D B.O.D.
6	-	-	-	-	-	-	6.85	7.04
8	-	-	-	-	8.90	9.06	8.90	9.06
10	11.00	11.14	11.00	11.26	11.00	11.30	11.20	11.45
12	13.06	13.24	13.06	13.52	13.34	13.52	13.48	13.70
14	15.14	15.50	15.14	15.70	15.46	15.70	15.84	15.97
15	16.26	16.56	16.26	16.82	16.68	16.92	16.90	17.02
16	17.30	17.60	17.30	17.94	17.74	17.98	17.98	18.10
18	19.34	19.80	19.62	20.10	20.06	20.20	20.06	20.34
20	21.42	22.06	21.72	22.32	22.18	22.32	22.18	22.66
21	22.46	23.18	22.76	23.44	23.22	23.62	23.22	23.80
24	25.88	26.48	26.32	26.80	26.32	26.86	26.32	27.40

All dimensions are in inches

CTD001459

CertainTeed

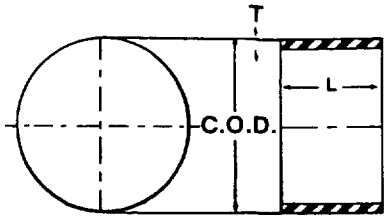

Coupling Dimensions

Pipe Size	All Classes T	All Classes L	2000D C.O.D.	2500D C.O.D.	3000D C.O.D.	3750D C.O.D.
6	.12	5.00	-	-	-	6.93
8	.12	5.00	-	-	8.97	8.97
10	.12	6.00	11.05	11.05	11.05	11.24
12	.15	6.75	13.15	13.15	13.42	13.56
14	.15	6.75	15.21	15.21	15.52	15.89
15	.15	6.75	16.30	16.30	16.73	16.95
16	.15	6.75	17.34	17.34	17.77	18.02
18	.18	8.50	19.42	19.69	20.13	20.13
20	.18	8.50	21.47	21.77	22.24	22.24
21	.18	8.50	22.51	22.81	23.27	23.27
24	.21	10.25	25.96	26.39	26.39	26.39

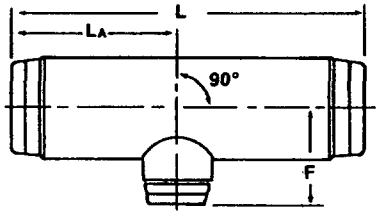

90° Reducing Tee

Size	L	LA	F
8x 6	39.0	11.0	10.25
10x 8	39.0	12.5	11.50
12x10	39.0	13.5	12.75
14x12	39.0	14.5	14.00
15x14	39.0	16.5	16.50
16x15	39.0	16.5	15.00
18x16	52.0	18.5	16.50
20x18	52.0	19.5	18.25
21x20	52.0	19.5	20.50
24x21	52.0	19.5	20.25

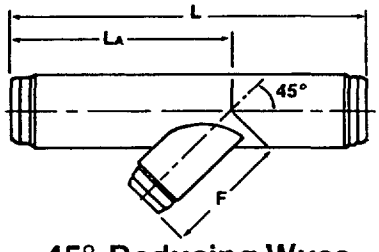

45° Reducing Wyes

Size	L	LA	F
8x 6	39.0	16.5	16.25
10x 8	39.0	20.0	19.50
12x10	39.0	22.5	22.75
14x12	39.0	25.5	25.75
15x14	39.0	29.6	29.75
16x15	39.0	28.5	29.50
18x16	52.0	32.0	31.25
20x18	52.0	35.0	35.25
21x20	52.0	38.2	37.80
24x21	52.0	39.0	39.00

All dimensions are in inches
Other size reduction combination available

CTD001460

A/C
Storm Sewer
Piping Products

45° Wye Tee

Main Pipe Size	L	L_A	F
8x 8	39.0	19.0	19.00
10x10	39.0	22.0	21.75
12x12	39.0	23.5	23.50
14x14	39.0	27.5	27.25
15x15	39.0	30.4	29.75
16x16	39.0	31.5	31.25
18x18	52.0	34.5	34.25
20x20	52.0	37.5	37.25
21x21	52.0	39.0	38.00
24x24	78.0	42.0	41.75

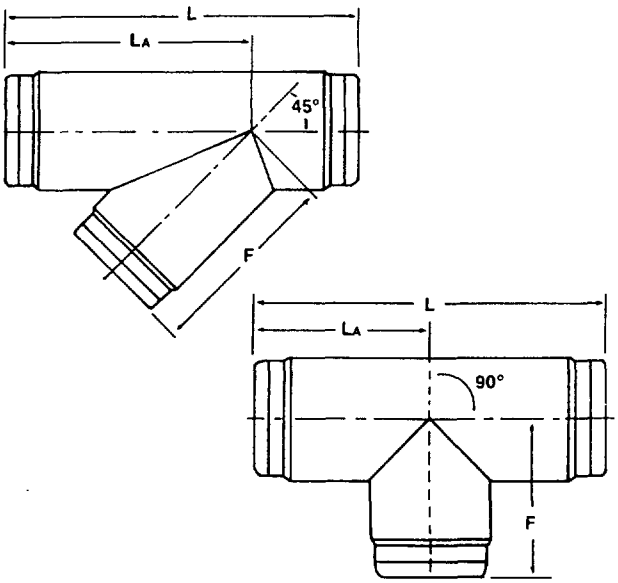

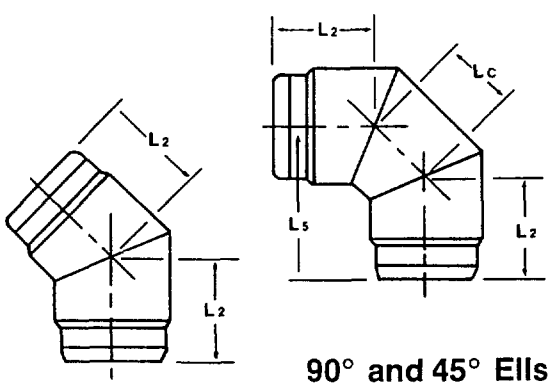

90° and 45° Ells

Pipe Size	L_2	L_C	L_5
6	9.75	9.50	16.47
8	9.75	9.50	16.47
10	9.75	9.50	16.47
12	9.75	9.50	16.47
14	9.75	9.25	16.47
15	9.75	9.25	16.29
16	9.75	9.25	16.29
18	19.50	18.50	32.58
20	19.50	18.25	32.40
21	19.50	18.25	32.40
24	19.50	18.00	32.23

Pipe Size	L	L_A	F
8x 8	39.0	11.0	10.25
10x10	39.0	12.5	11.75
12x12	39.0	13.5	12.75
14x14	39.0	14.5	14.25
15x15	39.0	16.5	16.50
16x16	39.0	16.5	15.25
18x18	52.0	18.5	17.25
20x20	52.0	19.5	18.25
21x21	52.0	20.5	20.50
24x24	78.0	21.5	20.25

All dimensions are in inches

CTD001461

CertainTeed

SHORT FORM SPECIFICATION A/C STORM DRAIN PIPE

1. General

1.1 **Scope**
This specification covers CertainTeed A/C Storm Drain Pipe intended for use in storm water drainage of highways, airports, farms, foundations and other drainage systems.

1.2 **Conformance**
CertainTeed A/C Storm Drain Pipe, as manufactured to meet these specifications, meets the requirements of the latest issues of the following specifications:
ASTM C 663
ASTM C 500
AASHTO Designation M-217, Division of Highways, State of California, Section 64

2. General Requirements

2.1 **Sizes & Classes**
Pipe shall be manufactured in the following sizes and classes:

D-Load Class	Nominal Sizes Inside Dia. (in.)
2000D	10, 12, 14, 15, 16 18, 20, 21, 24
2500D	10, 12, 14, 15, 16 18, 20, 21, 24
3000D	8, 10, 12, 14, 15 16, 18, 20, 21, 24
3750D	6, 8, 10, 12, 14, 15, 16, 18, 21, 24

2.2 **Lengths**
2.2.1 Standard Lengths
The standard nominal length of storm drain pipe shall be 13 feet in all sizes and classes. At least 85% of the total number of pipes in any one class and size excluding short lengths shall be standard lengths. The remaining 15% or less may be in random lengths of not less than 7 feet.
2.2.2 Short Lengths
Short lengths shall not exceed 6'6". Short lengths may be ordered as 1/4 lengths (3'3") or half lengths (6'6") in machined ends only MEO).

2.3 **Couplings**
A durable plastic coupling shall be provided with each length of pipe for the purpose of maintaining alignment and to ensure close joints.

2.4 **Fittings**
Storm drain fittings shall be made of the same material as the pipe or of material having equivalent crushing strength and design for the pipe with which they will be used.

3. Testing

3.1 **Chemical Requirements**
When tested in accordance with ASTM C 500, the amount of uncombined calcium hydroxide shall not exceed 1.0 percent.

3.2 **Crushing Strength**
Crushing tests in accordance with Division of Highways, State of California Specifications or ASTM C 500 shall be performed on a pipe sample taken from each lot of each size and class of pipe. This sample shall not fail until the total applied load exceeds the D load class crushing strength of pipe. If any sample fails to meet the crushing strengths requirement, one sample from each of two additional pipe lengths of the same lot shall be subjected to the crush test. Failure of one of these additional samples to meet the crushing strength requirement shall be cause for rejection of the entire lot of pipe.

The equivalent concrete pipe classes based on the ultimate strength of the concrete pipe are as follows:

A/C D-Load	Concrete Pipe Class
2000D	III
2500D	None
3000D	IV
3750D	V

CTD001462

CertainTeed

District Offices

Atlanta Pipe District
2295 Parklake Dr., N.E.
Suite 510
Atlanta, GA 30345
404/938-4616
TWX: 810-766-4926

Columbus Pipe District
1855 Fountain Square Court
Suite 106
Columbus, OH 43224
614/267-9435
TWX: 810-482-1732

Denver Pipe District
5115 South Valley Highway
Suite 156
Englewood, CO 80111
303/773-2760
TWX: 910-935-0888

Houston Pipe District
Suite 670
P.O. Box 25185
Houston, TX 77005
713/960-1470
TWX: 910-881-1652

Los Angeles Pipe District
1801 East Parkcourt Place
Suite 103
Santa Ana, CA 92705
714/972-2644
From Los Angeles: 213/625-1915
TWX: 910-591-1661

Phoenix Branch Office
Suite B-3
532 East Maryland
Phoenix, AZ 85012
602/274-3641
TWX: 910-951-1462

New Orleans Pipe District
P.O. Box 66318
Audubon Station
Baton Rouge, LA 70896
504/383-8094
TWX: 510-993-3454

Philadelphia Pipe District
987 Old Eagle School Road
Suite 703
Wayne, PA 19087
215/687-9250
TWX: 510-668-0641

St. Louis Pipe District
301 Sovereign Court
Suite 111, Regency Park
Manchester, MO 63011
314/394-7330
TWX: 910-760-1850

San Francisco Pipe District
3000 Citrus Circle
Suite 210
Walnut Creek, CA 94598
415/938-6800
TWX: 910-385-6815

Export
P.O. Box 860
Valley Forge, PA 19482
215/687-5000
TWX: 510-668-1912
TELEX: 845-263

CTD001463

Pipe & Plastics Group
CertainTeed Corporation
P.O. Box 860
Valley Forge, Pa. 19482

Printed in U.S.A.
0810

Code No. 403502