PLAINTIFF'S EXHIBIT

DOW-1773

CHRYSOTILE ASBESTOS TEST MANUAL
(Third Edition 1974)
(Revised 1978)

ST0720359

A publication of
ASBESTOS TEXTILE INSTITUTE, INC.
and
QUEBEC ASBESTOS MINING ASSOCIATION

Third Edition printed in the United States of America
1978 Revisions printed in Canada

ST0720360

Copyright © 1962, 1966, 1974
By: Asbestos Textile Institute, Inc.
and Quebec Asbestos Mining
Association
All rights reserved

Revisions © ATI Inc. and QAMA, 1978

(Revised 1978)

ST0720361

CONTENTS

Preface iv

List of Member Companies by Association

Asbestos Textile Institute, Inc. v
Quebec Asbestos Mining Association vi

Numerical Index with Adoption and Revision Dates viii

Summary Description of Tests

English x
French xiv

Definitions xviii

Procedures:

A Sampling

A-1 Method of Sampling and Preparation A-1/1
A-2 Definition of Terms Relating to Asbestos A-2/1

B Fibre Length-Dry

B-1 Quebec Standard Test B-1/1
B-2 Ro-Tap Screen Analysis B-2/1
B-3 Air Classification B-3/1
B-4 Suter-Webb Crudy Fibre Preparation B-4/1
B-5 Suter-Webb Comb B-5/1

C Fibre Length-Wet

C-1 Bauer McNett Wet Classification C-1/1
C-2 Length Distribution and Fines Content of Asbestos Fibres of 4A Grade and Longer by Wet Screening, using the Clark Classifier C-2/1
C-3 Length Distribution and Fines Content of Asbestos Fibres Shorter than 4A Grade by Wet Screening, using the Clark Classifier C-3/1
C-4 Wash Test C-4/1
C-5 T & N Wet Classification C-5/1

(Revised 1978)

ST0720362

D Degree of Openness, Loftiness - Bulk and Drainage

D-1 Wet Volume D-1/1
D-2 Dyckerhoff Air Permeability D-2/1
D-3 Rapid Surface Area D-3/1
D-4 Compressibility and Recovery D-4/1
D-5 Drainage Rate D-5/1
D-6 Loose Density D-6/1
D-7 Freeness D-7/1

E Crude and Granular Content

E-1 Crudy Content E-1/1
E-2 Grit and Spicule E-2/1

F Strength

F-1 Tensile Strength F-1/1
F-2 Method for Asbestos Fiber Strength Unit . . F-2/1
F-3 Strength in Asbestos-Cement Products F-3/1

G Other Fibre Characteristics

G-1 Color G-1/1
G-2 Quantitative Analysis G-2/1
G-3 Resin Sorption G-3/1
G-4 Moisture Content G-4/1
G-5 Soluble Chlorides G-5/1
G-6 Magnetic Rating G-6/1
G-7 Kerosene Retention G-7/1
G-8 Penetration Index G-8/1
G-9 T & N Magnetic Rating G-9/1
G-10 Mapes Magnetic Rating G-10/1

ST0720363

CHRYSOTILE ASBESTOS TEST MANUAL

PREFACE

The Testing Procedures have been prepared jointly by the Asbestos Textile Institute, Inc., and the Quebec Asbestos Mining Association, to provide standard methods for testing physical and chemical properties of chrysotile asbestos fibre.

The manual is a compilation of test methods for fabricators and manufacturers of asbestos products who have both the facilities to perform the test with accuracy, and the personnel with the required degree of laboratory skill.

The manual establishes authoritative procedures for testing milled chrysotile asbestos fibre. A number of tests used at various times in the industry, but which are now of little significance, have been omitted. It should be emphasized that this manual is neither a guide for placing a value on asbestos fibre, nor a specification for grading it. The intention of the sponsoring organizations is to present test procedures that will aid consumers and potential users of asbestos products throughout the world in characterising the properties of asbestos that fit their needs. These sponsors make no recommendations or suggestions for application or use of these tests and indicate only that these tests are proven procedures for measuring specified properties.

The sponsoring associations, whose addresses appear on pages v and vii will issue periodic revisions to include additional tests or modifications of established procedures. Each revision will include a revised numerical index with adoption dates or latest revision dates as given on page viii.

The information in this publication represents the combined effort of the Fibre Research and Testing Committee of the Asbestos Textile Institute, Inc., and the Test Manual and Technical Committee of the Quebec Asbestos Mining Association. The sponsors acknowledge with sincere appreciation and gratitute the help of personnel of these Committees for the generous contribution of their knowledge and, most important, for their time and effort in providing and compiling the required information.

(Revised 1978)

ST0720364

ASBESTOS TEXTILE INSTITUTE, INC.

Executive Office:

P.O. Box 224, Hatboro, PA 19040, U.S.A.

Member Companies

Amatex Corporation
Norristown, Pennsylvania, U.S.A.

Asberit S.A.
Rio de Janeiro, Brazil

Asbestos Corporation Limited
Montreal, Quebec, Canada

Asbestos Textil, S.A.
Naucalpan, Mexico

Bell Asbestos Mines Limited
Thetford Mines, Quebec, Canada

Canadian Johns-Manville Company, Limited
Asbestos, Quebec, Canada

Cassiar Asbestos Corporation Limited
Vancouver, British Columbia, Canada

Garlock of Canada Limited
Toronto, Ontario, Canada

Hilados & Tejidos de Asbesto, S.A.
Mexico City, Mexico

Lake Asbestos of Quebec Limited,
Black Lake, Quebec, Canada

Nippon Asbestos Company, Limited
Tokyo, Japan

Raybestos-Manhattan, Inc.
Trumbull, Connecticut, U.S.A.

Southern Asbestos Company
Charlotte, North Carolina, U.S.A.

TBA Industrial Products Limited
Rochdale, England.

(Revised 1978)

ST0720365

QUEBEC ASBESTOS MINING ASSOCIATION

Executive Office:

Suite 320,
580 Grande Allée Est,
Québec, Québec, Canada, G1R 2K2

Member Companies

Asbestos Corporation Limited
Thetford Mines, Quebec, Canada

Bell Asbestos Mines Limited
Thetford Mines, Quebec, Canada

Canadian Johns-Manville Company, Limited
Asbestos, Quebec, Canada

Carey Canadian Mines Limited
East Broughton Station, Quebec, Canada

Lake Asbestos of Quebec Limited
Black Lake, Quebec, Canada

National Asbestos Mines Division
Thetford Mines, Quebec, Canada

(Revised 1978)

ST0720366

Caution. When handling asbestos fibres, avoid creating dust. Breathing asbestos dust may cause serious bodily harm.

Attention. Si vous manipulez des fibres d'amiante, évitez de créer de la poussière. Respirer la poussière d'amiante peut nuire sérieusement à votre santé.

(Added 1978)

ST0720367

NUMERICAL INDEX WITH ADOPTION OR REVISION DATES

No.	Method	ATI	QAMA	ASTM*
A	Sampling			
A-1	Method of Sampling and Preparation	6/7/73	5/29/72	D2590
A-2	Definition of Terms Relating to Asbestos	...	5/29/72	D2946
B	Fibre Length-Dry			
B-1	Quebec Standard Test	6/7/73	3/3/59	...
B-2	Ro-Tap Screen Analysis	...	5/29/72	D2947
B-3	Air Classification	9/10/59	3/3/59	...
B-4	Suter-Webb Crudy Fibre Preparation	9/10/59	4/27/61	...
B-5	Suter-Webb Comb	2/11/65	3/16/65	...
C	Fibre Length-Wet			
C-1	Bauer McNett Wet Classification	10/7/65	3/29/73	D2589
C-2	Length Distribution and Fines Content of Asbestos Fibres of 4A Grade and Longer by wet Screening, using the Clark Classifier			
C-3	Length Distribution and Fines Content of Asbestos Fibres Shorter than 4A Grade by wet Screening, using the Clark Classifier			
C-4	Wash Test	...	5/29/72	...
C-5	T & N Wet Classification	...	10/6/72	...
D	Degree of Openness, Loftiness, Bulk and Drainage			
D-1	Wet Volume	...	10/6/72	...
D-2	Dyckerhoff Air Permeability	6/7/73	3/15/73	D2752
D-3	Rapid Surface Area	6/7/73	3/15/73	D2752
D-4	Compressibility and Recovery	5/27/73	...	...
D-5	Drainage Rate	...	1/16/62	...
D-6	Loose Density	...	10/6/72	...
D-7	Freeness	...	5/21/73	...

ST0720368

No.	Method	ATI	QAMA	ASTM*
D	Crude and Granular Content			
E-1	Crudy Content	...	6/20/61	...
E-2	Grit and Spicule	...	11/19/63	...
F	Strength			
F-1	Tensile Strength	9/10/59	...	...
F-2	Method for Asbestos Fiber Strength Unit	...	10/6/72	...
F-3	Strength in Asbestos-Cement Products	9/14/60	...	...
G	Other Fibre Characteristics			
G-1	Color	6/7/73	5/29/72	D2985
G-2	Quantitative Analysis	9/8/60	10/6/72	...
G-3	Resin Sorption	6/8/61	...	...
G-4	Moisture Content	6/7/73	5/29/72	D2987
G-5	Soluble Chlorides	6/8/62	10/6/72	D512
G-6	Replaced by G-10			
G-7	Kerosene Retention	...	5/29/72	...
G-8	Penetration Index	...	5/29/72	...
G-9	T & N Magnetic Rating	6/7/73	3/15/73	D1118
G-10	Mapes Magnetic Rating	2/11/65	3/15/73	D1118

* ASTM - Equivalent ASTM test methods.

ST0720369

SUMMARY DESCRIPTION OF TESTS

No.	Method
A-1	METHOD OF SAMPLING AND PREPARATION Apparatus and procedure for obtaining and preparing composite samples from lots of fibre for testing.
A-2	DEFINITIONS OF TERMS RELATING TO ASBESTOS This listing includes only those definitions which have won unanimous approval. (Additional definitions are listed on pages xviii and xix).
B-1	QUEBEC STANDARD TEST Apparatus and procedure for dry screen classification, by length distribution, of chrysotile asbestos fibre into commercial grades.
B-2	RO-TAP SCREEN ANALYSIS Apparatus and procedure for dry screen analysis, by length of fibre, of grades other than Groups 1, 2 and 3.
B-3	AIR CLASSIFICATION Apparatus and procedure for indicating the relative proportions of fines (less then 40 microns), fibre and granular material (rock) in milled asbestos fibre.
B-4	SUTER-WEBB CRUDY FIBRE PREPARATION Apparatus and procedure for preparing representative specimens for the Suter-Webb Comb (B-5) from fibre containing many bundles.
B-5	SUTER-WEBB COMB Apparatus and procedure for determining the weighted mean fibre length of asbestos samples or specimens containing few, if any, crudy bundles of fibre. Tests employ either the Suter-Webb or Turner comb sorter.
C-1	BAUER McNETT WET CLASSIFICATION Apparatus and procedure for wet screen analysis by fibre length distribution and fines content of milled asbestos fibre.

ST0720370

No.	Method
C-4	WASH TEST Apparatus and procedure for wet determination of the fines content of asbestos fibres.
C-5	T & N WET CLASSIFICATION Turner and Newall apparatus and procedure for wet screen analysis by fibre length distribution and fines content of milled asbestos fibre.
D-1	WET VOLUME Apparatus and procedure for appraising all grades of asbestos fibre in terms of its buoyancy in water.
D-2	DYCKERHOFF AIR PERMEABILITY Apparatus and procedure for measuring the relative degree of openness or fiberization of milled asbestos fibre by an air permeability method.
D-3	RAPID SURFACE AREA TEST Apparatus and procedure for measuring the relative degree of openness or fiberization of milled asbestos fibre by an air permeability method.
D-4	COMPRESSIBILITY AND RECOVERY Apparatus and procedure for determining the bulk factor of textile grades of asbestos fibre.
D-5	DRAINAGE RATE Apparatus and procedure for determining water drainage rate from an asbestos water slurry using a commercial sheet mold.
D-6	LOOSE DENSITY Apparatus and procedure for determining the loose density of milled asbestos fibre in Groups 5, 6, 7, 8 and 9.
D-7	FREENESS Apparatus and procedure for measuring the rate at which an asbestos-water slurry may be dewatered. Groups 4, 5, 6 and grade 7D.
E-1	CRUDY CONTENT Apparatus and procedure for measuring by water elutriation a residue of material that indicates the crudiness or grit content, or both, in milled fibre.

ST0720371

No.	Method
E-2	GRIT AND SPICULE Apparatus and procedure for measuring by water elutriation a residue of material that indicates grit and spicule content in milled fibre.
F-1	TENSILE STRENGTH Apparatus and procedure for determining the tensile strength of asbestos fibre.
F-2	STRENGTH UNIT Apparatus and procedure for determining the strength giving properties of specific grades of asbestos fibres in asbestos-cement products.
F-3	RELATIVE STRENGTH IN ASBESTOS-CEMENT PRODUCTS Apparatus and procedure for determining the strength value of asbestos fibres in asbestos-cement products.
G-1	COLOR Apparatus and procedure for determining the color and differences in color and shade of asbestos fibre.
G-2	QUANTITATIVE ANALYSIS Apparatus and procedure for the quantitative analysis of chrysotile asbestos fibre.
G-3	RESIN SORPTION Apparatus and procedure for determining resin sorption by asbestos fibres
G-4	MOISTURE CONTENT Apparatus and procedure for determining the moisture content of asbestos fibres.
G-5	SOLUBLE CHLORIDES Apparatus and procedure for the volumetric determination of the chloride ion in the water extraction of the soluble chloride from asbestos fibre.
G-6	MAGNETIC RATING Replaced by G-10.
G-7	KEROSENE RETENTION Apparatus and procedure for measuring the kerosene retained by asbestos fibres in Group 7.

ST0720372

No.	Method
G-8	PENETRATION INDEX Apparatus and procedure for evaluating the penetration resistance of an asphalt-asbestos mix for Group 7 fibres.
G-9	T & N MAGNETIC RATING Turner and Newall apparatus and procedure for measuring the magnetic effect of diamagnetic compounds in a sample of asbestos.
G-10	MAPES MAGNETIC RATING Mapes apparatus and procedure for measuring the magnetic effect of diamagnetic compounds in a sample of asbestos.

ST0720373

DESCRIPTION SOMMAIRE DES ESSAIS

No.	Essais
A-1	METHODE D'ECHANTILLONNAGE ET PREPARATION DES ECHANTILLONS Appareil et procédé utilisés pour l'obtention et la préparation d'échantillons composés, à partir de lots de fibre à vérifier.
A-2	DEFINITIONS DES TERMES RELIES A L'AMIANTE Cette liste inclus seulement les définitions qui ont été acceptées unanimement. (Des définitions supplémentaires sont présentées aux pages xviii et xix).
B-1	ESSAI STANDARD DU QUEBEC (Q.S.) Appareil et procédé utilisés pour la classification de la fibre d'amiante chrysotile en différentes catégories commerciales (procédé à sec, d'après la longueur).
B-2	ANALYSE PAR TAMIS RO-TAP Appareil et procédé utilisés pour l'analyse par tamisage à sec, d'après la longueur apparente de la fibre, pour les catégories autres que les groupes 1, 2, et 3.
B-3	CLASSIFICATION PAR AIR Appareil et procédé utilisés pour établir les proportions relatives de matières fines (au-dessous de 40 mμ), de fibre et des matières granuleuses (roche) dans la fibre d'amiante usinée.
B-4	PREPARATION DE LA FIBRE BRUTE POUR L'EPREUVE SUTER-WEBB Appareil et procédé utilisés pour la préparation d'échantillons-types destinés à l'épreuve Suter-Webb (B-5), à partir de fibre contenant des faisceaux bruts.
B-5	ESSAI AU PEIGNE SUTER-WEBB Appareil et procédé utilisés pour déterminer la longueur moyenne des fibres, dans les échantillons ou spécimens contenant peu ou pas de faisceaux bruts. Ces essais requièrent l'usage du trieur à peigne Turner ou Suter-Webb.

ST0720374

No.	Essais
C-1	CLASSIFICATION BAUER McNETT Appareil et procédé utilisés pour l'analyse au crible par voie humide de la distribution apparente des longueurs et de la teneur en matières fines de la fibre d'amiante usinée.
C-4	ESSAI DE LAVAGE Appareil et procédé utilisés pour déterminer par lavage, la teneur en matières fines des fibres d'amiante.
C-5	CLASSIFICATION A L'EAU T & N Appareil et procédé Turner & Newall utilisés pour l'analyse au crible par voie humide de la distribution apparente des longueurs et de la teneur en matière fines de la fibre d'amiante usinée.
D-1	VOLUME EN MILIEU AQUEUX Appareil et procédé utilisés pour l'évaluation de tous les groupes de fibre d'amiante selon leur flottabilité dans l'eau.
D-2	PERMEABILITE A L'AIR (PROCEDE DYCKERHOFF) Appareil et procédé utilisés pour mesurer le degré relatif d'usinage de la fibre d'amiante en fonction de la perméabilité à l'air.
D-3	ESSAI RAPIDE DE SURFACE Appareil et procédé utilisés pour mesurer le degré relatif d'usinage de la fibre d'amiante en fonction de sa perméabilité à l'air.
D-4	COMPRESSIBILITE ET ELASTICITE Appareil et procédé utilisés pour déterminer le facteur d'élasticité des catégories de fibre d'amiante, utilisés dans les textiles.
D-5	VITESSE DE DRAINAGE Appareil et procédé utilisés pour mesurer la vitesse d'écoulement de l'eau d'une pulpe eau-amiante à l'aide d'un moule commercial.
D-6	DENSITE LACHE Appareil et procédé utilisés pour déterminer la densité lâche de la fibre d'amiante usinée dans les groupes 5, 6, 7, 8 et 9.

No.	Essais
D-7	RAPIDITE DE DRAINAGE Appareil et procédé utilisés pour mesurer la rapidité avec laquelle une pulpe eau-amiante peut être libérée de son contenu d'eau par filtration: Groupes 4, 5, 6 et grade 7D.
E-1	TENEUR EN FAISCEAUX BRUTS Appareil et procédé utilisés pour mesurer, à l'aide d'un procédé d'élutriation à l'eau, la teneur en faisceaux bruts ou en granules non-fibreux, ou les deux, de la fibre usinée.
E-2	TENEUR EN SPICULES ET GRANULES NON-FIBREUX Appareil et procédé utilisés pour mesurer, à l'aide d'un procédé d'élutriation à l'eau, la teneur en spicules et en granules non-fibreux, de la fibre usinée.
F-1	RESISTANCE A LA TENSION Appareil et procédé utilisés pour déterminer la résistance en tension de la fibre d'amiante.
F-2	ESSAI DE RESISTANCE Appareil et procédé utilisés pour déterminer l'accroissement de résistance que certaines catégories spécifiques de fibres donnent aux produits d'amiante-ciment.
F-3	RESISTANCE RELATIVE DANS LES PRODUITS D'AMIANTE-CIMENT Appareil et procédé utilisés pour déterminer la valeur de résistance des fibres d'amiante utilisées dans les produits d'amiante-ciment.
G-1	COLORATION Appareil et procédé utilisés pour déterminer la coloration et les différences de couleur et de nuance de la fibre d'amiante.
G-2	ANALYSES QUANTITATIVES Appareil et procédé utilisés pour les analyses quantitatives de la fibre d'amiante chrysotile.
G-3	ABSORPTION DE RESINE Appareil et procédé utilisés pour déterminer la quantité de résine absorbée par les fibres d'amiante.

ST0720376

No.	Essais
G-4	TENEUR EN HUMIDITE Appareil et procédé utilisés pour mesurer la teneur en humidité des fibres d'amiante.
G-5	CHLORURES SOLUBLES Appareil et procédé utilisés pour la détermination volumétrique de l'ion de chlorure dans l'eau utilisée pour l'extraction des chlorures solubles provenant des fibres d'amiante.
G-7	AESORPTION DE KEROSENE Appareil et procédé utilisés pour mesurer la quantité de kérosène retenue par les fibres d'amiante du groupe 7.
G-8	INDICE DE PENETRATION Appareil et procédé utilisés pour évaluer la résistance à la pénétration d'un mélange d'asphalte et d'amiante du groupe 7.
G-9	EVALUATION MAGNETIQUE T & N Appareil et procédé Turner & Newall utilisés pour l'évaluation des effets magnétiques des composés magnétiques dans un échantillon de fibre ou de composés d'amiante.
G-10	EVALUATION MAGNETIQUE MAPES Appareil Mapes et procédé utilisés pour l'évaluation des effets magnétiques des composés magnétiques dans un échantillon de fibre ou de composés d'amiante.

ST0720377

DEFINITIONS

The following definitions have won a measure of recognition and are in fairly wide usage. Most are presently being considered for adoption by one or more recognized standardizing bodies. The additional listing presented in A-2 has been adopted as standard definitions.

brittle – the tendency to break readily when flexed.

chrysotile – metamorphosed asbestiform serpentine, corresponding to the formula $Mg_6 Si_4 O_{10} (OH)_8$.

chrysotile asbestos – same as chrysotile.

crenulations – a multiplicity of kinks in situ that can, because of the interlocking effect of the kinks, affect both the fibre strength and the fibre cohesion. Fibre may be described as free from crenulations, or as slightly to highly crenulated.

fibre adhesion – the resistance met when fibres are separated from the seam wall (from the host rock). Fibres may be described as having from low to high adhesion.

fibre cohesion – the resistance met when fibres are separated from each other. Fibres may be described as having from low to high cohesion. This characteristic is related to the ease with which the fibre can be opened.

floats – air-floated fibrous fraction recovered from the air filtration system of an asbestos mill.

fracture – a clearly defined break in the fibre in situ.

harsh – inherent property of a particular type of asbestos fibre implying a degree of stiffness or rigidity.

kinks – definite and well defined small changes in direction of the fibre in situ that could lead to points of weakness in the fibres when separated. Fibres may be described as kinked or straight.

mass fibre – asbestos fibre that does not occur in seams or veins, and are randomly arranged in the host rock.

silky – descriptive of fibres that have low fibre cohesion, feel soft to the touch, and have a high degree of flexibility.

ST0720378

soft – inherent property of a particular type of asbestos fibre implying a high degree of flexibility and low fibre cohesion.

spicules – two types of agglomerates called spicules are found in milled asbestos:

1. Rod-like pieces of unopened asbestos.

2. Lath-like particules resembling assemblages of asbestos fibres, but composed of non-fibrous minerals.



Chrysotile Asbestos Test Manual

Third edition

ST0720379

A-1-74

METHOD OF SAMPLING AND PREPARATION

Supersedes Method A-1 of the 1966 second edition

Revised and adopted by:

Asbestos Textile Institute - 28 Feb 1974

Quebec Asbestos Mining Association - 29 May 1972

Printed in USA

ST0720380

METHOD OF

SAMPLING AND PREPARATION [1]

Designation A-1-74

1. Scope

1.1 This method provides procedures for taking a composite or a master composite sample, at the mine or at the factory, of a lot of milled asbestos fibre used as raw material in the asbestos industry, conditioning this sample and reducing it in quantity through a series of steps to provide a relatively small test specimen of loose asbestos fibres, representative of the lot and suitable for the determination of a single property.

2. Significance

2.1 Sampling and conditioning are no less important than the method of test in the determination of reliable test results. The reliability of the test results depends primarily upon how well the specimens tested represent the true character and condition of the lot of asbestos fibre. Much care and effort are required to be sure that all the sampling operations are systematic or at random and are representative. Failure to provide a test specimen that accurately represents the lot from which it is drawn will produce misleading test results regardless of the accuracy and the precision of the test method.

3. Definitions

3.1 shipment - any consignment formed of one or several lots of asbestos fibre.

3.2 lot - any quantity of bags of the same type or grade of asbestos fibre offered for delivery at one time and considered sufficient to yield the test specimens required. The importance of the lot is characterized by the number of bags of which it is composed.

3.3 bag - any quantity of asbestos fibre corresponding to one particular grade that is packed in a single container.

Note 1 - In the asbestos industry, the typical quantity contained in a bag is approximately 45 kg (100 lb).

3.4 grade - asbestos fibre that has the same properties throughout and which is designated by a particular code corresponding to any given specifications.

3.5 unit sample - a sample drawn from one bag.

3.6 composite sample - a sample taken from a shipment to represent a lot of not more than 200 nor less than 2 bags for use in the laboratory as a source of test specimens. It is made up of unit samples taken from bags selected systematically or at random.

3.7 master composite sample - two or more composite samples combined into one sample, used when shipment exceeds 200 bags, but not in excess of 2000 bags.

3.8 test specimen - a specific portion of the sample upon which a test is to be performed. A test specimen is formed of several pinches or handfuls, depending on its size and the test to be performed.

3.9 pinch - as much fibre as can be taken up between the tips of a finger and thumb.

3.10 handful - as much fibre as the hand can contain.

3.11 random sample - the composite sample is random if each individual bag in the lot being examined has an equal chance of being included in the sample.

3.12 systematic sample - the composite sample is systematic if it is formed of every k^{th} bag of the lot to be examined.

Note 2 - The symbol k may represent any positive whole number.

3.13 referee sample - a sample on which acceptability is based. Acceptability will be based on a composite sample if the lot is 200 bags or less, or on a master composite sample if over 200 bags, but not in excess of 2000 bags.

3.14 conditioning - process by which the fibre is put in proper condition to be tested. This can be done by hand (Method A, in 7.2.1) or mechanically (Method B, in 7.2.2).

4. Apparatus

4.1 Clean Containers, approximately 30-dm^3 (1-ft^3) capacity, one for each composite sample of fibre.

4.2 Clean Area with a smooth surface.

4.3 Balances of various capacities depending on the size of the test specimen required, that is, from 2.5 kg (5 lb) down.

4.4 Laboratory Fibre Conditioner (Method B), see Figs. 1 and 2.

4.5 Fibre Mold (Method B), see Fig. 3.

4.6 Fibre Press (Method B), see Fig. 4. The piston diameter of the press shall be 203 mm (8 in.).

4.7 Source of Random Numbers.

4.8 Rolling Sheet.

5. Procedure for Taking a Composite Sample[2]

5.1 Divide the shipment into as many lots as necessary, each lot corresponding to any one type or grade of fibre. When large quantities must be sampled, where access to the individual bags is limited and where restacking of the lot is impossible or implies unreasonable expense, the method for Limited Accessibility Sampling described in Annex A1 may be used if agreed to between vendor and buyer.

5.2 Prepare a 2.5-kg (5-lb) composite sample from each lot consisting of 200 bags or part thereof (the number of bags in the lot being designated by N), by taking 20 handfuls (approximately 125 g or 4 oz) one in every N/20th bag of the lot (systematic sample), or one in 20 different bags taken at random, using the source of random numbers. If moisture evaluation is required, see Note 3.

Note 3 - If moisture determination is required, place the samples in moistureproof containers immediately, and delay Sections 6 and 7 until the moisture test specimens have been taken from the samples and returned to moistureproof containers until tested. Take specimens for moisture tests as described in Section 8 but strive to limit atmospheric contact with the specimens to minimize changes in moisture content.

Note 4 - If the need for a larger sample is foreseen, a larger composite sample may be prepared.

Note 5 - If the lot is small, such that more than one handful from each bag is required to make up the sample, take each handful from a different part of each bag.

5.3 Master Composite Sample.

5.3.1 When a lot exceeds 200 bags, but not 2000 bags,

composite samples may be combined into one master composite sample at the discretion of the tester.

5.3.2 Prepare a 2.5-kg (5-lb) sample from the master composite sample by quartering it, placing aside the full thickness of two diametrically opposite quarters, and reblending the remainder by coning. Continue this quartering until a 2.5-kg (5-lb) sample is obtained.

5.4 The 2.5-kg (5-lb) sample will be used as the source of test specimens for each individual test.

5.5 The samples shall be placed in closed containers and kept in covered storage, ready for subsequent conditioning and mixing.

6. Test Conditions[2]

6.1 Each sample shall be allowed to come to equilibrium with test-room temperature and humidity. Refer to Note 3.

6.2 Moisture content of sample should not exceed 3 percent.

7. Conditioning and Mixing

7.1 Spread the sample as obtained in sections 5 and 6, on a smooth and clean area.

7.2 Conditioning.

7.2.1 Conditioning by Hand (Method A) - Condition the sample by passing the fibre through the hands with gentle rubbing in order to break up lumps and separate clots.

7.2.2 Mechanical Conditioning (Method B) - For best results, it is recommended that the fibre be conditioned by means of the laboratory fibre conditioner.

7.2.2.1 Break up by hand all large lumps contained in the composite sample.

7.2.2.2 Put into the fibre mold 0.6 to 0.7 kg (1.25 to 1.5 lb) of fibre, free of large lumps.

7.2.2.3 Place the mold in the fibre press and apply with compressed air a total force of 19 ± 2 kN (4200 ± 500 lbf) for 60 s to form a fibre cake.

7.2.2.4 Release the pressure and remove the pressed fibre

cake, whole, by pushing it out with the piston of the mold.

7.2.2.5 Feed the pressed fibre cake into the laboratory fibre conditioner operating at 525 ± 25 rpm.

Note 6 - Break Group 3 fibre cake into three or four pieces before feeding it into the conditioner to prevent jamming.

7.2.2.6 Re-feed the conditioned fibre into the laboratory fibre conditioner, using choke-feeding, to give the fibre a second conditioner pass.

7.2.2.7 Break by hand any lumps remaining after the second conditioner pass.

7.3 Mixing - After conditioning, mix the sample thoroughly by passing the fibre through the hands with a gentle shaking motion.

8. Procedure for Taking Test Specimens

8.1 Spread the conditioned and mixed sample as obtained in 7.3, on a smooth and clean area in order to obtain a flat pile of approximately 50 to 70 mm (2 to 3 in.) thick.

8.2 Quarter the 2.5-kg (5-lb) sample, placing aside the full thickness of two diametrically opposite quarters for storage.

8.3 Reblend the remaining 1.25 kg (2.5 lb) by coning or rolling the fibre, spread it out evenly 25 to 35 mm (1 to 1.5 in.) thick, quarter, and use two diametrically opposite quarters for the Quebec Standard Test specimen.

8.4 Reblend remainder by coning or rolling and spread on the smooth and clean surface to form a flat pile approximately 15 to 25 mm (0.5 to 1 in.) thick.

8.5 Select a test specimen by taking pinches from locations in the pile chosen randomly, until a sample is obtained that will require minimum adjustment to the desired weight.

Note 7 - As pinches are taken, care must be exercised that each pinch contains the total cross section of the pile from top to bottom at the point where it is taken, including any grit or fines which may have segregated at the bottom.

9. Report

9.1 If a sampling report is necessary, include a statement

as to how the samples were drawn and conditioned. Fully identify the sample with the lot that it represents.

10. Precision and Accuracy

10.1 Careful attention to the procedure of sampling, subsampling, and conditioning will produce test specimens that are representative of the original material.

ANNEX

A1 LIMITED ACCESSIBILITY SAMPLING

A1.1 Preamble

A1.1.1 For meaningful and accurate results, the procedure is recommended for referee purposes. However, when it is impractical to comply with its requirements and when mutually agreed to by the parties concerned, the following simplifications are permitted:

A1.2 Principle

A1.2.1 The principle upon which sampling may be simplified is the application of the same specimen selection criteria to designated accessible portions of the pile, which portions shall be most nearly representative of the bags within the pile.

A1.2.2 The portions of the pile prescribed may include all the exposed accessible surface layer of bags.

A1.2.3 In cases where the pile of bags was stacked in a known order[3], and one or more of the exposed accessible surfaces of the pile of bags are known to contain a representative array of lots from which the pile is composed, then select the samples from these surfaces to the neglect of other accessible, but less representative surfaces of the pile.

A1.2.4 In cases where the pile of bags was not stacked in a known order, the accessible surface, or surfaces, shall be divided into areas most nearly representing volumes of 200 bags within the pile, and samples shall be selected from these surface areas.

Note A1 - A 6x6 area (36 bags) representing a 6x6x6 bag cube (216 bags) is most suitable. Where the depth of the pile is greater, or less, than 6 bags, the selected area should include a number of bags tnat equals 200/(depth of pile).

A1.3 Sampling

A1.3.1 Once a representative accessible surface, or surfaces, have been selected, proceed as follows to collect the specimens of which the sample is composed:

ST0720387

A1.3.2 Prepare a 2.5 kg (5 lb) composite sample from the chosen surface, representing of 200 bags or part thereof by selecting 20 handfuls{approximately 100 g (4 oz)} each from a different 1/20th of the surface. Where the area representing the volume of 200 bags consists of less than 20 bags, the number of bags from which the 20 handfuls are selected may be reduced, but should not be less than 10. If an exposed area of less than 10 bags is accessible as representing the 200-bag unit, then the sample must be drawn from all of the accessible bags and be so recorded.

A1.3.3 When the accessible surface represents more than 200 bags, but not more than 2000 bags, composite samples may be combined into one master composite sample at the discretion of the tester, if agreed to between vendor and buyer.

A1.3.4 Samples shall be kept in closed containers placed in covered storage for subsequent testing.

A1.4 Sample Preparation

A1.4.1 Proceed as in 5.3.2 of Method A-1.

ST0720388

FOOTNOTES

1. Supersedes Method A-1 of the 1966 second edition. Dates of adoption or latest revision: Asbestos Textile Institute adopted 7 Jun 1973, latest editorial revision, 28 Feb 1974; Quebec Asbestos Mining Association, adopted 29 May 1972, latest editorial revision, 14 Mar 1974.

2. Samples for evaluation by Method G-4 for Moisture Content[4] must not be conditioned, and must be kept in moistureproof containers.

3. Common practice in the asbestos producing industry is to form large piles of bags of the same grade by stacking pallet loads in orderly rows in such a sequence that one exposed surface of the pile will contain a representative array of pallet loads from each production lot. The surface occupied by each lot is proportional to the volume of each lot.

4. Appears in Chrysotile Asbestos Test Manual, third edition, available from Quebec Asbestos Mining Association, 580 Grande Allée East, Suite 320, Quebec, P.Q., Canada, G1R 2K2.

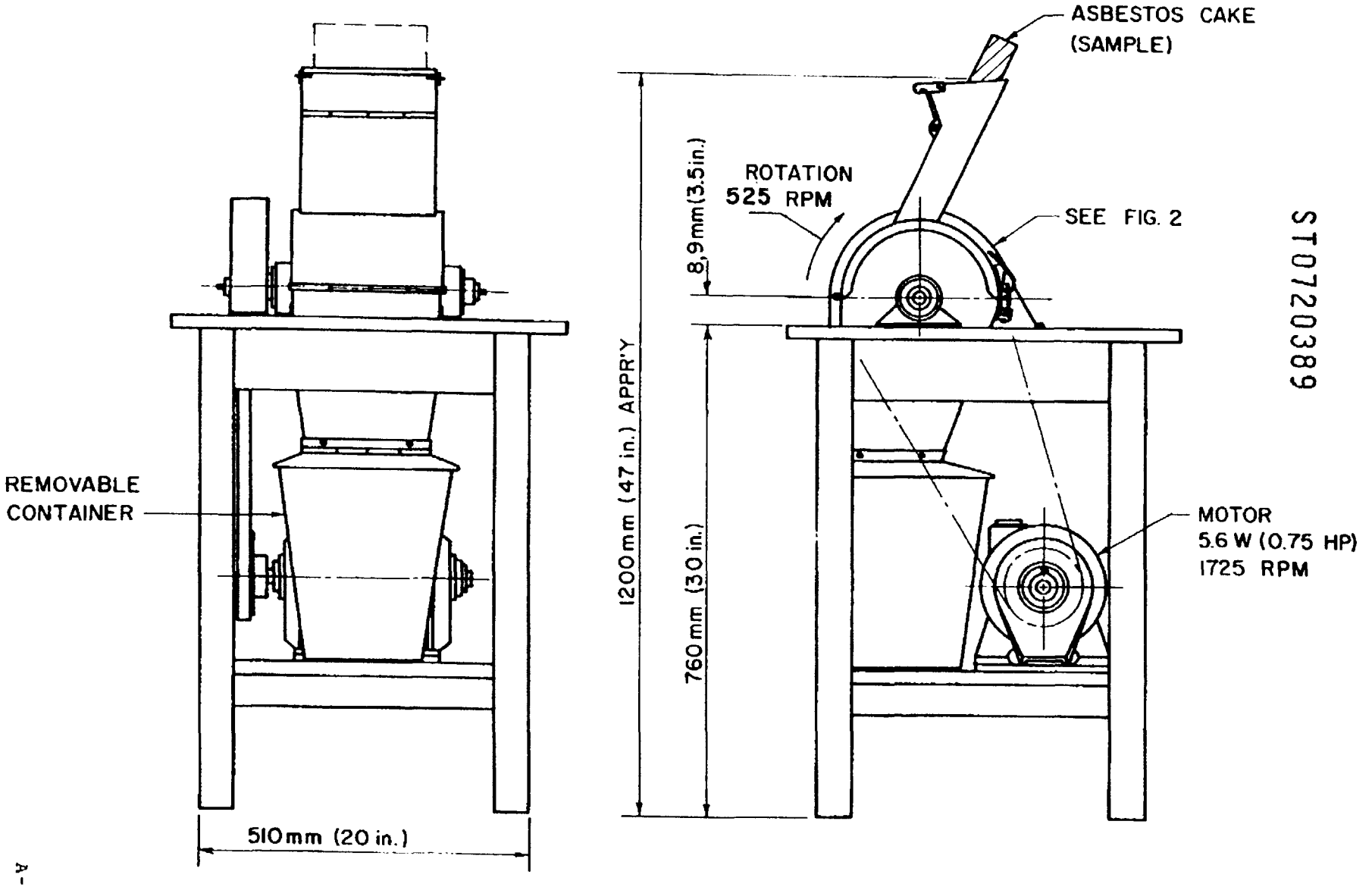

ST0720389

A-1/11

Fig·1-Laboratory Fiber Conditioner

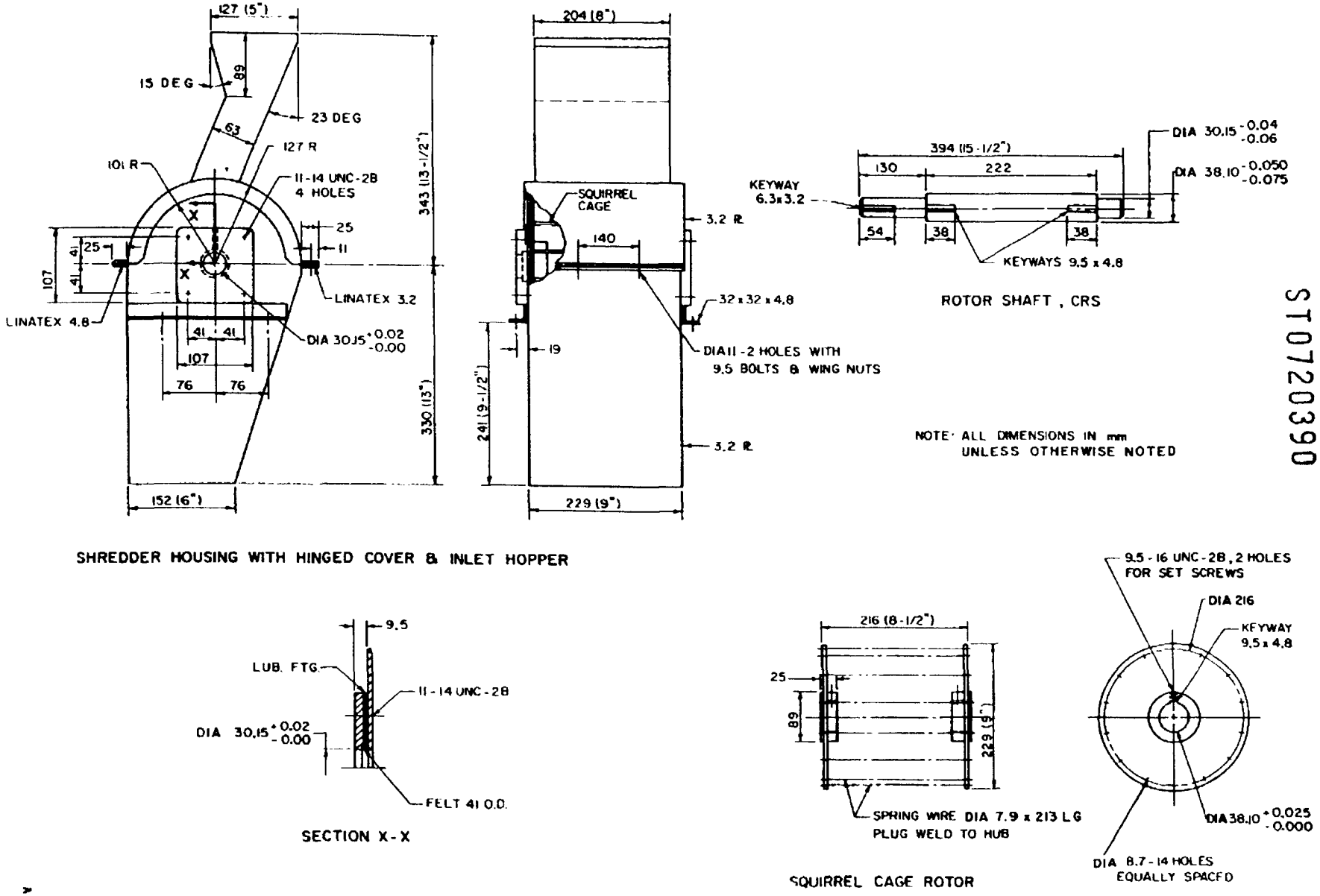

SHREDDER HOUSING WITH HINGED COVER & INLET HOPPER

ST0720390

A-1/12

Fig·2- Conditioner Details

ST0720391

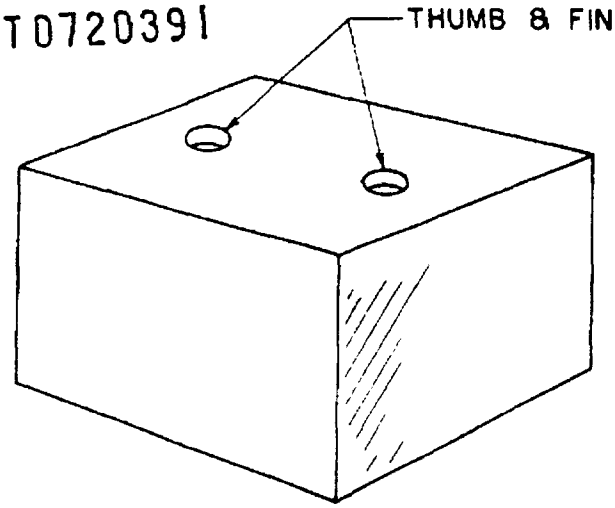

PISTON - ALUMINUM
178.7mm (7.052") SQ.
x 144 mm (5-11/16") HIGH
TOP & BOTTOM MADE
OF 12,7mm (1/2") PL,
OUTSIDE WALLS 6.4 mm
(1/4") PL, 3 REINFOR-
CING 6,4mm (1/4") PL
INSIDE

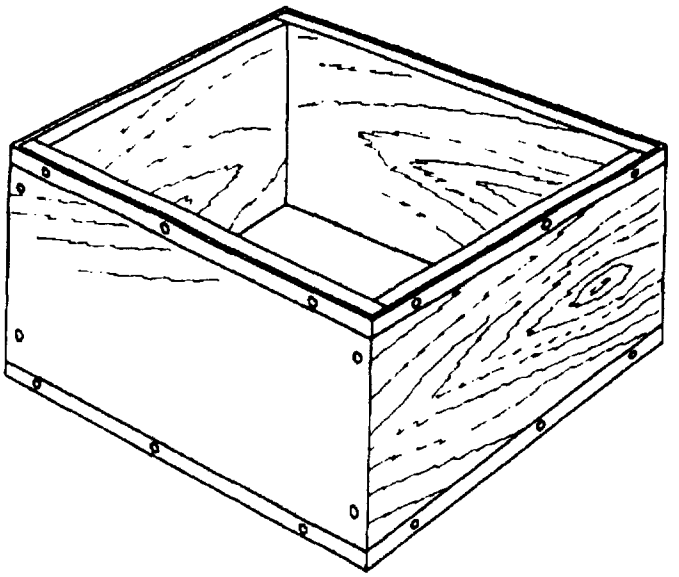

MOLD - 19mm (3/4")
PLYWOOD
INSIDE DIM. 179mm
(7-1/16") SQ. x
144mm (5-11/16") HIGH

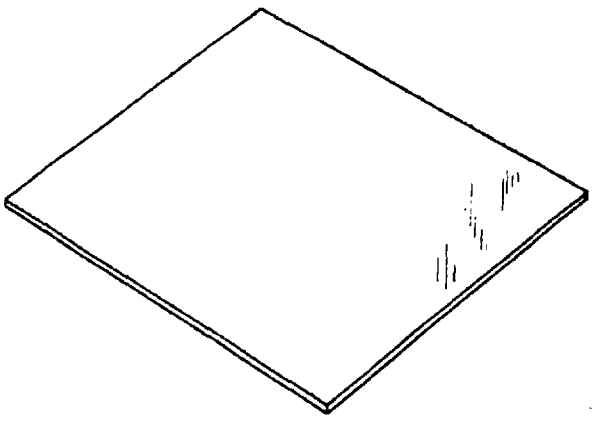

SEAT - 3.2 mm (1/8")
MASONITE
178.7mm (7.052") SQ.

Fig·3 - Fiber Mold

A-1/13

ST0720392

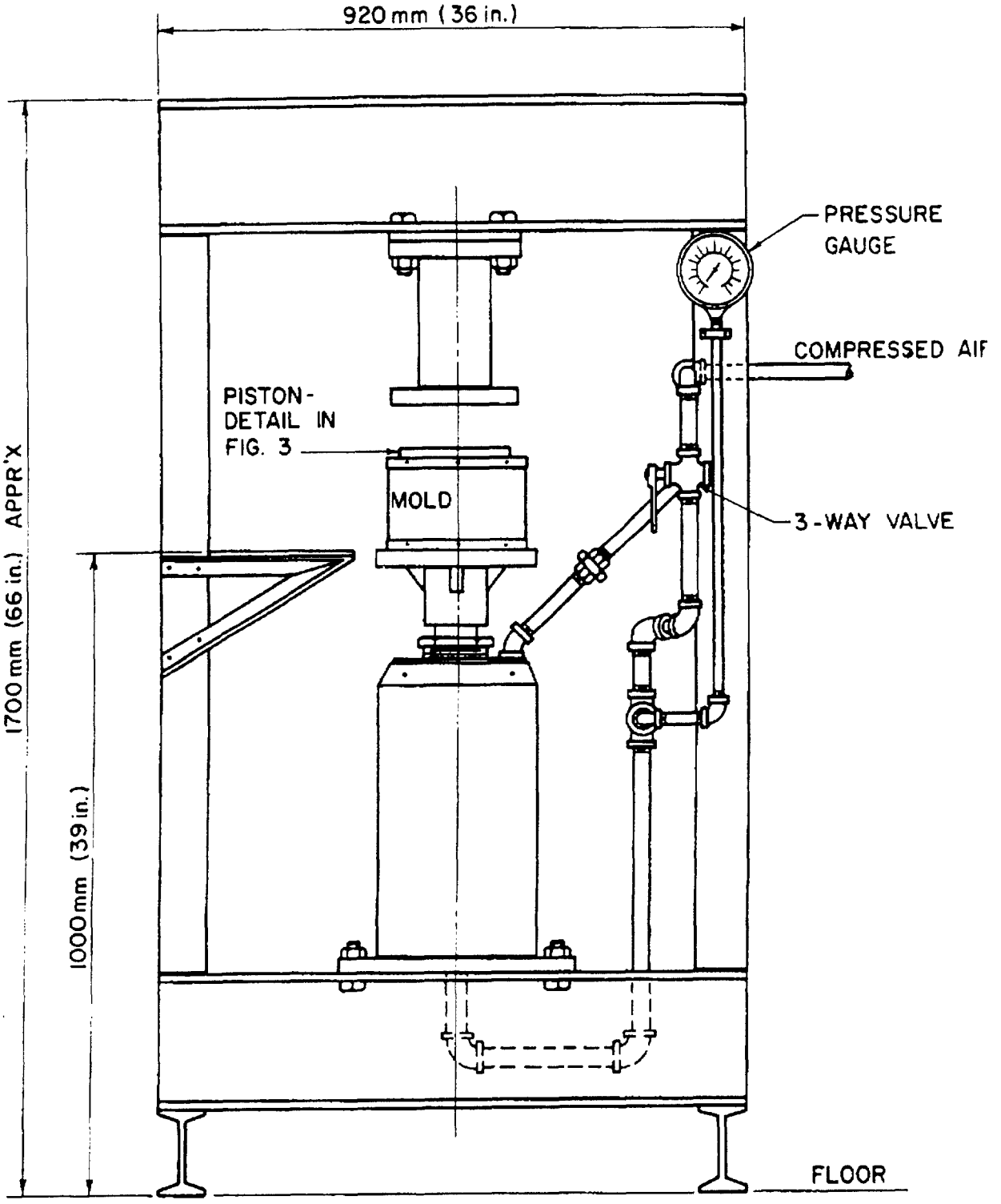

Fig. 4 - Fiber Press

A-1/14

A
2

C392.H

Chrysotile Asbestos Test Manual

Third edition

ST0720393

A-2-72

DEFINITIONS OF TERMS RELATING TO ASBESTOS

Second publication

Revised or adopted by:

Asbestos Textile Institute, Inc. - ...

Quebec Asbestos Mining Association - 29 May 1972

Revised - 6 October 1976

Printed in Canada

ST0720394

DEFINITIONS OF TERMS RELATING TO ASBESTOS[1]

Designation A-2-72

asbestos fibre — acicular silicate mineral, with a structure based upon silicon-oxygen tetrahedra, that fits the definition of a fibre[2], and is composed of single crystals in predominantly parallel orientation. Common usage also designates a collectivity of asbestos fibres as asbestos fibre.

bundle — a heavy assemblage of asbestos fibres[2] in close-packed parallel orientation, that may be partially crushed[3].

cross-fibre — asbestos fibre[2] that originates from veins or seams in which fibres[2] are oriented predominantly at right angles to the plane of the vein or seam.

crude asbestos — hand cobbed (released from its ore by manual hammer impact) cross-vein asbestos in its natural or unfiberized form.

crudiness (kroodiness') — the degree to which an asbestos fibre[2] approaches the crude state.

crudy (kroodi) — the quality of processed asbestos fibre[2] with relatively low specific surface area and degree of fiberization, containing an appreciable portion of unfiberized agglomerates (derived from the term crude asbestos).

crudy bundle (kroodi) — a heavy assemblage of asbestos fibres[2] in close-packed parallel orientation, that may be partially crushed[3].

fibre — any material in a form such that it has a minimum length to average maximum transverse dimension of 10 to 1, a maximum cross sectional area of 5.06×10^{-2} mm^2 (7.85×10^{-5} in.^{2}) (corresponds to a circular cross section of 0.254 mm (0.010 in.) in diameter) and a maximum transverse dimension of 0.254 mm (0.010 in.).

fibre spicules — rod-like pieces composed of asbestos fibres[2] in close-packed parallel orientation, with undisturbed natural relative positions, of sufficient number to impart rigidity. If dimensions exceed 10 mm (0.4 in.) in length and 1 mm (0.04 in.) in transverse dimension, the term pencil may be used[3].

fibril — a single crystal in the form of a fibre[2].

ST0720395

fines – the finest class of material produced by particle size classification of asbestos fibre[2] by any accepted test method. Common usage in the asbestos industry has defined fines as that material which passes through the finest mesh used in Method C-1[4].

loftiness – the measure of the loose specific volume of asbestos fibre. This is inversely related to the dry bulk density.

milled asbestos – all grades of asbestos produced by the mechanical treatment of asbestos ore.

milling – a process by which asbestos ore is treated mechanically to produce grades of asbestos fibre[2] with desired qualities.

nonfibrous spicules – acicular particles resembling assemblages of asbestos fibre composed of nonfibrous, or semi-fibrous minerals such as picrolite.

open – the quality of asbestos fibre[2] with relatively high specific surface area, and degree of fiberization, free from a significant portion of unfiberized agglomerates.

pencil – rod-like assemblage of asbestos fibres[2] in close-packed parallel orientation, of generally uniform diameter, that can be fiberized readily. If dimensions are inferior to 10 mm in length and 1 mm in transverse dimension, the term fibre spicule may be used[3].

slip-fibre – asbestos fibre[2] that originates from veins or seams in which fibres are oriented predominantly parallel to each other and to the plane of the vein or seam.

spelk – rod-like assemblage of asbestos fibres[2] in close-packed parallel orientation, of generally uniform diameter, that can be fiberized readily[3].

whisker – any material that fits the definition of fibre[2] and is a single crystal.

Note 1 – Whisker is used incorrectly to designate a flocculus, or tuft, occurring as a long-fibre contaminant among short asbestos fibres[2].

Note 2 – The term fibril is a preferred designation.

ST0720396

TABLE 1 - Relative Dimensions of Naturally Occurring Chrysotile Asbestos Agglomerates in Increasing Order of Transverse Dimensions.

Order	Name	Approximate Transverse Dimension	
		min	max
1	Fibril	0.01 μm (0.4 x 10^{-6} in.)	0.1 μm (4 x 10^{-6} in.)
2	Fibre (single)	0.015 μm (0.6 x 10^{-6} in.)	0.1 μm (4 x 10^{-6} in.)
3	Fibre spicule	0.1 mm (0.04 in.)	1 mm (0.04 in.)
4	Nonfibrous spicule	0.1 mm (0.04 in.)	...
5	Pencil	1 mm (0.04 in.)	8 mm (0.3 in.)
5	Spelk	1 mm (0.04 in.)	8 mm (0.3 in.)
6	Bundle	8 mm (0.3 in.)	...
6	Crudy bundle	8 mm (0.3 in.)	...

ST0720397

FOOTNOTES

1. Second publication. Dates of adoption or latest revision: Asbestos Textile Institute, latest editorial revision 28 Feb 1974; Quebec Asbestos Mining Association, adopted 29 May 1972, latest editorial revision 6 October 1976.

2. Definitions for the terms fibre and asbestos fibre are included in this list.

3. Refer to Table 1 for dimensions.

4. Appears in the Chrysotile Asbestos Test Manual, third edition, available from Quebec Asbestos Mining Association, 580 Grande Allée East, Suite 320, Quebec City, PQ, Canada G1R 2K2.

B
1

0397 A

Chrysotile A :stos Test Manual

Third edition

ST0720398

B-1-73

QUEBEC STANDARD TEST

Revised and adopted by:

Asbestos Textile Institute - 7 Jun 1973

Quebec Asbestos Mining Association - 3 Mar 1959

Printed in USA

ST0720399

B-1-73

QUEBEC STANDARD TEST[1]

Scope

This method of test covers a procedure for dry classification[2], by length distribution, of chrysotile asbestos fibres into commercial grades.

Apparatus

(1) The Quebec Standard Asbestos Testing Machine, Model[3] No. 2.

Note: The machine shall be constructed and operated according to the specification issued by the National Research Council of Canada. (Abstract attached[4]).

(2) A 16 oz. scoop scale with graduations of 0.2 oz. and a sensitivity of 0.1 oz.

(3) A smooth-surfaced mixing table.

Sampling and Preparation

In accordance with (A-1) "Method of Sampling and Preparation."

Procedure

Sample to be tested shall be placed on the table and conditioned to normal room temperature and humidity. Examine the sample by passing through the hands to insure that clots or lumps are broken up. The moisture content of the sample should not exceed 3 percent (significant variations not normally encountered except when moisture content exceeds 3 percent). Erratic results can be expected beyond 3 percent.

Mix thoroughly, weigh accurately into the scoop of the scale, a 16 oz. ± 0.1 oz. representative portion. Place the specimen in Box No. 1 of the testing machine, by letting it fall

loosely from the scoop. The scoop shall be held from 6 to 10 inches above the screen cloth. Take care that when the cover of the testing machine is closed, the fibre shall not be compressed.

When setting the boxes on the machine, be sure that they are lined up true to the platform and that the ends of the boxes always face the same way each time they are used.

Start the machine and allow it to run until it automatically stops. Then, remove each tray and dump the fibre resting on each tray onto the mixing table, in individual piles, picking up and adding the loose fibre adhering to the cloth.

Weigh separately the fibre recovered from each tray; the weights in ounces of the fibre shall be recorded as the Quebec Standard Test of the fibre samples.

Report

To the nearest 0.1 oz. the fibre retained in each box. An example of test results on a long (Group 3) fibre and short (Group 7) fibre would be:

	Box 1 1/2"	Box 2 4 mesh	Box 3 10 mesh	Box 4 pan	Total
Long Fibre	3.2	9.4	2.8	0.6	16.0 oz.
Short Fibre	0	0	6.2	9.8	16.0 oz.

QUEBEC STANDARD ASBESTOS TESTING MACHINE, MODEL 2

General Specifications

1. The Main Frame or Base shall be in one piece of grey cast iron conforming to Drawing No. 2, item No. 1*. (See original publication for Drawings).

2. All castings shall be free of blow holes, blisters and all other faults or defects and shall be properly machined at surfaces contacting other parts of the machine moving or stationary. Other cast iron surfaces, where not machined, shall be smoothed off and painted with one coat of suitable metal paint. All castings whether aluminum or cast iron shall be finished to remove sharp edges.

3. All machine parts such as bolts, nuts, cap screws, studs, pulleys, bearings, steel springs, or any other parts, shall be used in standard engineering practice.

4. Foundations shall be of concrete, or concrete mat, allowing one inch for grouting, the surface shall be level in every direction. This foundation shall be isolated from disturbing vibration caused by extraneous forces.

5. Main Frame or Base shall be bolted by four foundation bolts, one at each corner.

6. The main shaft of the machine shall rotate at a rate of 327 rpm with a tolerance of plus or minus 1 rpm. Direction of rotation shall be counterclockwise as observed while facing machine at timing box side.

7. The automatic cut-off shall release the belt shifter after 600 revolutions. The machine shall then be stopped within two and one-half revolutions by the automatic application of the brake at the same time that the cut-off shall have released the belt shifter.

8. Each machine shall be driven by squirrel cage electric motor of not less than 2 hp, connected to it by belt, either in one stage or by medium of one countershaft. This motor shall not be used as prime mover for any machine other than a testing machine.

9. Bolts and fixtures shall be kept well tightened.

10. The transmission belting shall be kept in good condition and shall be periodically scraped and dressed, so as to prevent slippage. Endless belting with properly glued joints shall be used.

11. The moving parts shall be kept greased and oiled to ensure free movement.

12. Bearings shall be adjusted or renewed when clearance permits a perceptible knock or play.

13. The machine shall be kept in adjustment conforming to the dimensions on Assembly Drawing No. 1*. (See original publication for Drawings.) When the eccentric is in high position, the common vertical through the centres of the lower and upper rocker arm bearing shall intersect at 90 degrees, the horizontal through the centre of the main shaft.

14. A tolerance of 1/16 inch shall be allowed on the dimensions in this Drawing No. 1 except in the case of the centre distance between upper and lower rocker arm bearing, where the tolerance shall be limited to plus or minus 0.005 inch. Tolerances here refer only to adjustment dimensions. Table in any position shall be horizontal in the direction parallel to the main shaft and the two rocker arm shafts.

15. The Main Frame or Base, main shaft bearing housings and lower rocker arm bearing supports shall be cast in one piece of grey cast iron conforming to Drawing No. 2. Casting shall be machined where contacts are made with parts attached to it. Holes shall be drilled and tapped for various connecting parts, all as shown on Drawing No. 2 above-mentioned.

16. Timing Box Bracket shall be of grey cast iron as shown in Drawing No. 3, machined where contacting Main Frame and Timing Box. This bracket shall be attached to Main Frame by two 1/2 inch x 1 inch standard cap screws with hexagon head.

17. Shaking table and eccentric housings shall be of cast aluminum conforming to Drawing No. 4 all to be machined where contacting other parts. Item No. 4, eccentric housings shall be cast in two separate aluminum castings machined where contacting other part. Item No. 4 shall be bolted to item No. 3 by two standard hexagon head 5/8 inch by 7 inch long bolts. Shaking table assembly shall be connected to main shaft through eccentric adapters by two SKF bearings number 6222.

18. Clamping device shall be as per Assembly Drawing No. 21 and details per Drawings Nos. 22 and 23.

Note: * Send request to the National Research Council of Canada, Ottawa, Canada, for "Standard Specifications for Quebec Standard Asbestos Testing Machine."

Testing Boxes

A set of Testing Boxes shall consist of three boxes, a pan and cover, all of cast aluminum, as per Drawing No. 19.

Inside diameter of all boxes and pans shall be 14-3/4 x 24-1/2 inches.

Total over-all height of the four nested boxes without cover shall not be less than 14-9/16 inches nor more than 14-5/8 inches.

1st. box with 1/2 inch opening screen cloth properly attached - over-all height 3-3/4 inches.

2nd. box with a 4 mesh screen properly attached - over-all height 3-21/32 inches.

3rd. box with 10 mesh screen properly attached - over-all height 3-5/8 inches.

Pan with 20 gauge g.s. sheet attached to bottom - over-all height 3-17/32 inches.

Screen cloth to be attached to boxes with 1/8 inch flat head stove bolts and nuts, as per Drawing No. 19, using 20 gauge galvanized strips between screen cloth and bolt heads.

Specifications for Testing Screens

The screens for the Quebec Standard Testing Machine, Model 2 shall conform to the following specifications:

Dimensions

Length: 25-3/4 inches

ST0720404

Width: 16-1/16 inches
Mesh Opening: 1/2 inch screen = 0.500 in.; 4 mesh = 0.187 in.;
10 mesh = 0.053 in.
Wire Diameter: 1/2 inch screen = 0.105 in.; 4 mesh = 0.063 in.;
10 mesh = 0.047 in.

Note: The 1/2 inch screen shall have 42 holes formed by the 43 wires on length; 26 full holes formed by 27 wires on width.

Tolerances

On wire diameter: 0.001 inch
On mesh opening : An average tolerance of +2 per cent and -3 per cent shall be allowed, provided that a maximum tolerance of plus or minus 5 per cent shall not exceed 5 per cent of the total number of openings.

Material

The screens shall be woven from a hard drawn brass wire of the composition 80-85 per cent Cu and 20-15 per cent Zn.

Weave

The 1/2 inch screen and the 4 mesh screen shall be woven in such a manner that the warp and shute wires are securely interlocked at intersections.

The 10 mesh screen shall be woven by the "Double Crimped" process.

General

Screen cloth shall lie flat and rigid and shall be free from wrinkles.

Cloth shall be cut in such a manner that the shute wire forms the longer dimension.

The 1/2 inch screen shall be attached to the screen box in such a manner that 24 full openings are formed with 25 wires; there will then remain 1/16 of an inch on each side between the inside of the box and the last wires.

FOOTNOTES

1. Supersedes designation B-1 in the 1966 second edition. Dates of approval or latest revisions: Asbestos Textile Institute, adopted 7 Jun 1973, latest editorial revision 28 Feb 1974; Quebec Asbestos Mining Association, adopted 3 Mar 1959, latest editorial revision 14 Mar 1974.

2. The Quebec Standard Classification of Chrysotile Asbestos Grades, based upon this method of test, is available from the Quebec Asbestos Mining Association, 580 Grande Allée East, Suite 320, Quebec, P.Q., Canada, G1R 2K2.

3. Model 2 is illustrated in Fig. 1. At some locations the Model 3 is in use and this is directly driven by V-belts (without the use of a countershaft) and it is fitted with a solenoid activated pony brake.

4. Specifications for the Model 2 tester, as well as the name and address of the current authorized suppliers, are available from the Quebec Asbestos Mining Association, 580 Grande Allée East, Suite 320, Quebec, P.Q., Canada, G1R 2K2.

ST0720406

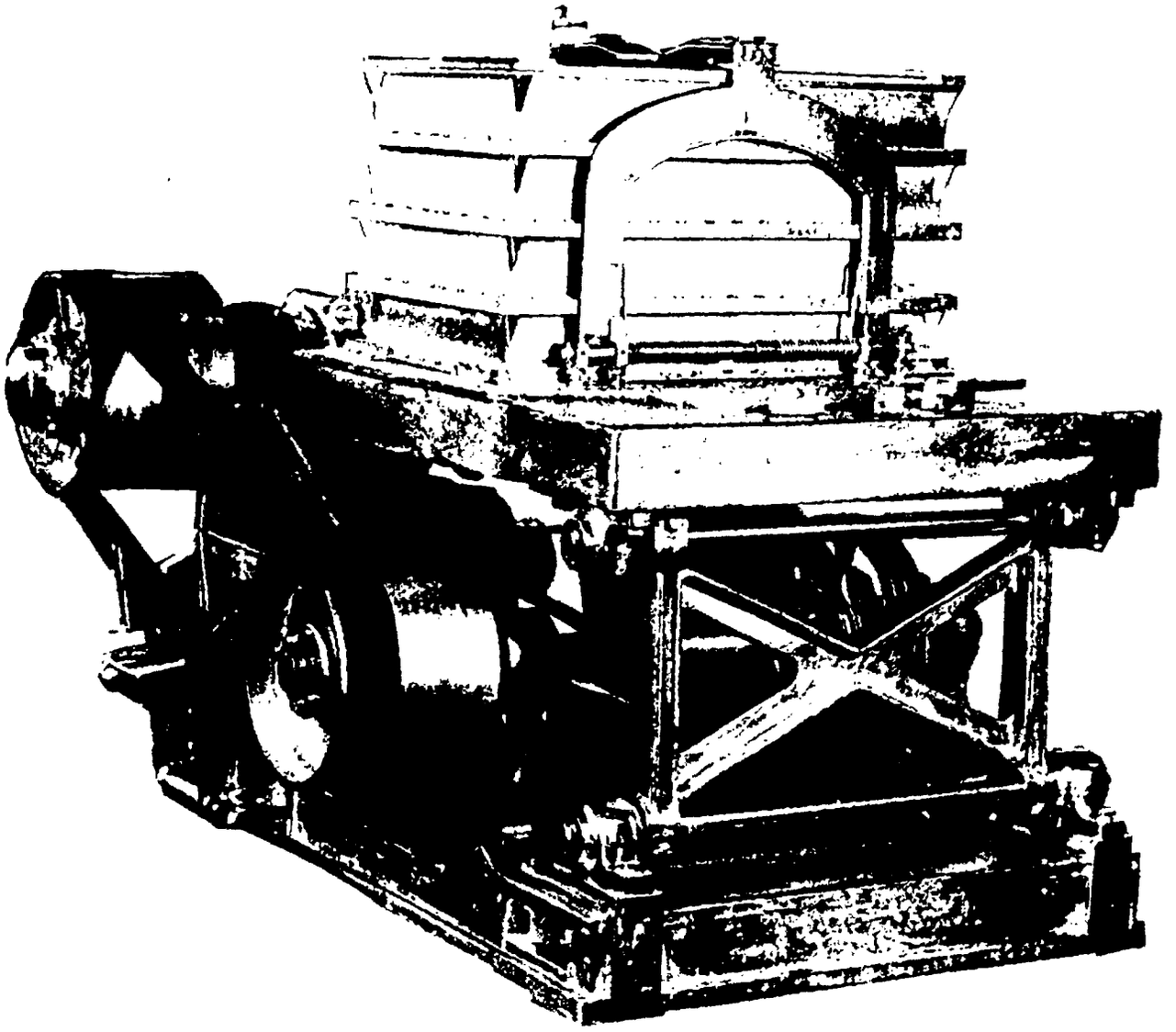

Fig.1- Quebec Standard Asbestos Testing Machine, Model 2



0406.A

Chrysotile Asbestos Test Manual

Third edition

ST0720407

B-2-72

RO-TAP SCREEN ANALYSIS

Supersedes Method B-2 of the 1966 second edition

Revised and adopted by:

Asbestos Textile Institute - ...

Quebec Asbestos Mining Association - 29 May 1972

Printed in USA

ST0720408

Method of

RO-TAP SCREEN ANALYSIS[1]

Designation B-2-72

1. Scope

1.1 This method of test covers a dry screen analysis for asbestos fiber by means of a mechanical sieve shaker.

1.2 The procedure is limited to Group 4 and shorter asbestos fiber samples[2].

Note 1 - The values stated in U.S. customary units are to be regarded as the standard. The metric equivalents of U.S. customary units may be approximate.

Note 2 - For referee testing use S.I. (Systeme International) metric units for specimen weights and sieve designations.

2. Summary of Method

2.1 The procedure consists of screening a test specimen through a specified nest of sieves by means of a mechanical sieve shaker that reproduces the circular and tapping motion given testing sieves in hand-sieving, but with a uniform, mechanical action, assuring accurate and dependable tests.

3. Significance

3.1 Test results give some indication of the apparent fiber length distribution in the sample tested.

3.2 Sieves are ideally suited to measure particle size and particle size distribution when all three axes of the particle are equi-dimensional or the particle is of spherical shape. Asbestos fibers differ considerably from these ideal conditions and, therefore, results depart from a true measure of fiber length and length distribution.

3.3 Characteristics that influence screening efficiency

influence test results. Among these are moisture content, degree of fiberization, harshness, and the tendency for fibers to cling together, and of short fibers and fines to cling to longer fibers.

3.4 In spite of its shortcomings, this method is particularly useful because of its simplicity and speed and satisfactory reproducibility.

3.5 The test is suitable for specification acceptance, and manufacturing control.

4. Apparatus

4.1 Sieve shaker[3] for 203-mm (8-in.) diameter sieves, or an equivalent device that can impart to the nest of sieves an identical motion shall be used.

4.1.1 The shaker shall be mounted on a suitably firm foundation, preferably concrete.

4.1.2 The eccentric shaft shall rotate at a speed of 285 ± 5 rpm. The machine shall be geared to give 152 taps/min when the eccentric shaft rotates at 285 rpm.

4.1.3 The plate supporting the nest of sieves must be set to give a clearance of 2.4 ± 0.8 mm (3/32 ± 1/32 in.) between the top of the cast iron cover and the bottom of the stops on the carrying plate (dimension A in Fig. 1). This clearance is sufficient to allow the nest of sieves to be easily set in place and to rotate freely when the shaker is in operation. It is important that this gap be checked periodically in order to maintain proper sieving action.

4.1.4 The cast iron cover for the nest of sieves shall be fitted with a standard No. 9 rubber stopper made of neoprene or other elastomer of equal elasticity.

4.1.5 The height of the stopper above the top of the cast iron cover plate shall be 25.4 ± 3.2 mm (1 ± 1/8 in.) (dimension A plus B in Fig. 1) measured with the hammer resting on the stopper. With a new stopper this measurement should be taken only after the machine has been in operation for a few hours and should be set as closely as possible to the maximum setting of 28.6 mm (1-1/8 in.).

4.1.6 The center of the hammer is a point in the center of the face 244.5 ± 0.4 mm (9-5/8 ± 1/64 in.) from the center of the hammer pin. The hammer drop, measured from the center of the hammer in its highest position, to the top of the

stopper, shall be 34.9 ± 3.2 mm (1-3/8 ± 1/8 in.). The hammer drop may be adjusted by adjustments in the top end of the push rod or adjustments in the push rod collar, or by both adjustments. A minimum clearance of 1.6 mm (1/16 in.) between the push rod and the hammer in its lower position, (dimension E in Fig. 1) should be maintained.

4.1.7 Automatic timer or timeswitch to energize the shaker with an accuracy of ± 5 s, on periods extending from 0.6 to 1.8 ks (10 to 30 min).

4.2 Sieves

4.2.1 Standard 203-mm (8-in.) diameter covers, sieve frames, and pans shall be used. Sieve frames and pans shall be full height. Wire cloth of sieves, covers, frames and pans shall conform to ASTM Specifications E 11 for Wire-Cloth Sieves for Testing Purposes[4] except that stainless steel may be used in place of sheet brass if desired. Alternatively, equivalent Tyler Standard Screen Scale sieves may be used.

4.2.2 If calibration and standardization are desired, proceed as in the appendix to specifications E 11.

5. Sampling

5.1 Select samples in accordance with Method A-1[5].

6. Test Specimens, Screen Sizes and Test Duration

6.1 The sample size, series of sieves and test duration for the particular grade to be tested are shown in Table 1.

7. Procedure

7.1 Select a series of sieves corresponding to the grade of fiber to be tested as listed in Table 1.

7.2 Nest the sieves in the order of mesh number with the coarsest size on top, and a pan at the bottom.

7.3 Weigh the specimen to the weight indicated in Table 1 and place it on the uppermost sieve and close it with a sieve cover.

7.4 Set the cast iron cover in place on top of the sieve cover.

7.5 Place the sieve assembly in the shaker and lock it in position.

7.6 Start the sieve shaker and run it for the test duration specified in Table 1.

7.7 When the shaker has stopped, remove the sieves and weigh the contents of each to the nearest 0.1 g (0.003 oz).

8. Report

8.1 Record the analysis in tabular form as the percentage by weight of material retained on each individual sieve and in the pan.

8.1.1 The particular sieve designation used or the nominal opening of each sieve should be clearly indicated.

8.2 In addition, results may also be presented as cumulative retained, cumulative percent passing, or by graphical representation.

8.3 Fully identify the sample as to origin and grade designation[2].

8.4 If screen blinding, or the formation of agglomerations of any kind due to the shaking action are encountered, remarks to this effect must be included in the report.

9. Precision and Accuracy

9.1 Allowable error in the accumulative total may not exceed ± 1.0 percent.

TABLE 1 - Sieve Sizes and Test Duration

Q.S.[a] grade Fiber Group	Sieve Numbers: U.S. Standard Series Alternative Sieve Designation	Sieve Numbers: Tyler Series Mesh Designation	Weight g	Test Duration ks	Test Duration min
4	.265 in., Nos. 4, 6, 12, 20, 40	3, 4, 6, 10, 20, 35	50 ± 0.05	0.6	10
5	4, 6, 12, 20, 40, 70	4, 6, 10, 20, 35, 65	50 ± 0.05	0.6	10
6 and 7D	6, 12, 16, 20, 40, 70	6, 10, 14, 20, 35, 65	100 ± 0.05	0.6	10
7 and 8 (Except 7D)	6, 16, 20, 30, 40, 70	6, 14, 20, 28, 35, 65	100 ± 0.05	1.8	30

(a) Quebec Standard (Q.S.) designation of chrysotile asbestos grades.

ST0720412

FOOTNOTES

1. Supersedes designation B-2 in the 1966 second edition. Dates of adoption or latest revision: Asbestos Textile Institute, latest editorial revision 28 Feb 1974; Quebec Asbestos Mining Association, adopted 29 May 1972, latest editorial revision 14 Mar 1974.

2. Quebec Standard (Q.S.) designation of chrysotile asbestos grades.

3. The Tyler Ro-Tap has been found satisfactory for this purpose. The criteria, settings, and adjustments specified in 4.1.2 to 4.1.6 have been found to provide reproducible results with this unit. Any other mechanical shaker that imparts to the nest of sieves a motion identical to that of this device, and that can reproduce results achieved with the Ro-Tap would be acceptable as being equivalent thereto. The Ro-Tap is supplied by the W.S. Tyler Co. Mentor, Ohio.

4. Annual Book of ASTM Standards, Part 41.

5. Appears in Chrysotile Asbestos Test Manual, third edition, available from Quebec Asbestos Mining Association, 580 Grande Allée East, Suite 320, Quebec, P.Q., Canada, G1R 2K2.

ST0720414

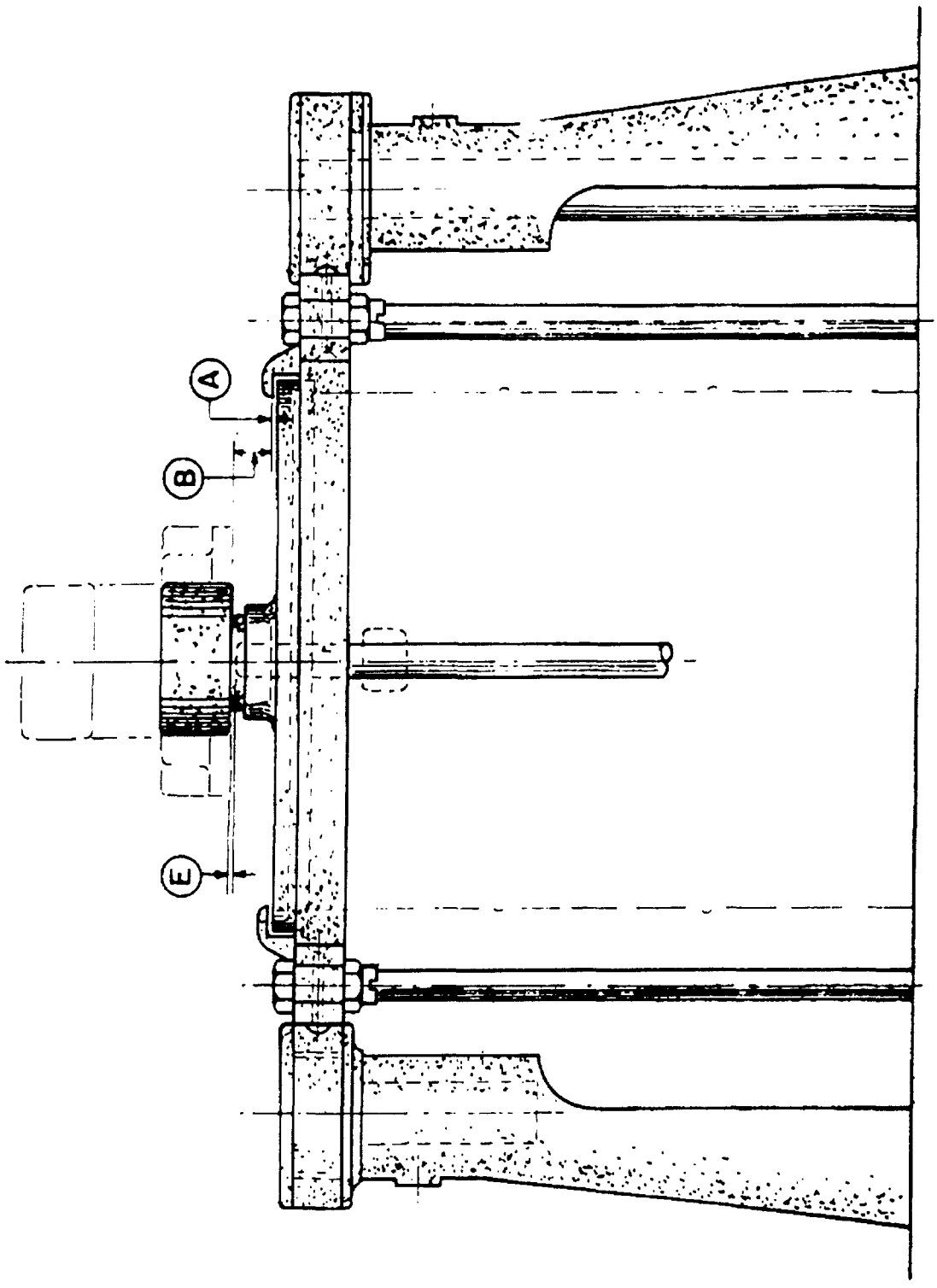

Fig.1 — Ro-Tap Sieve Shaker

ST0720415

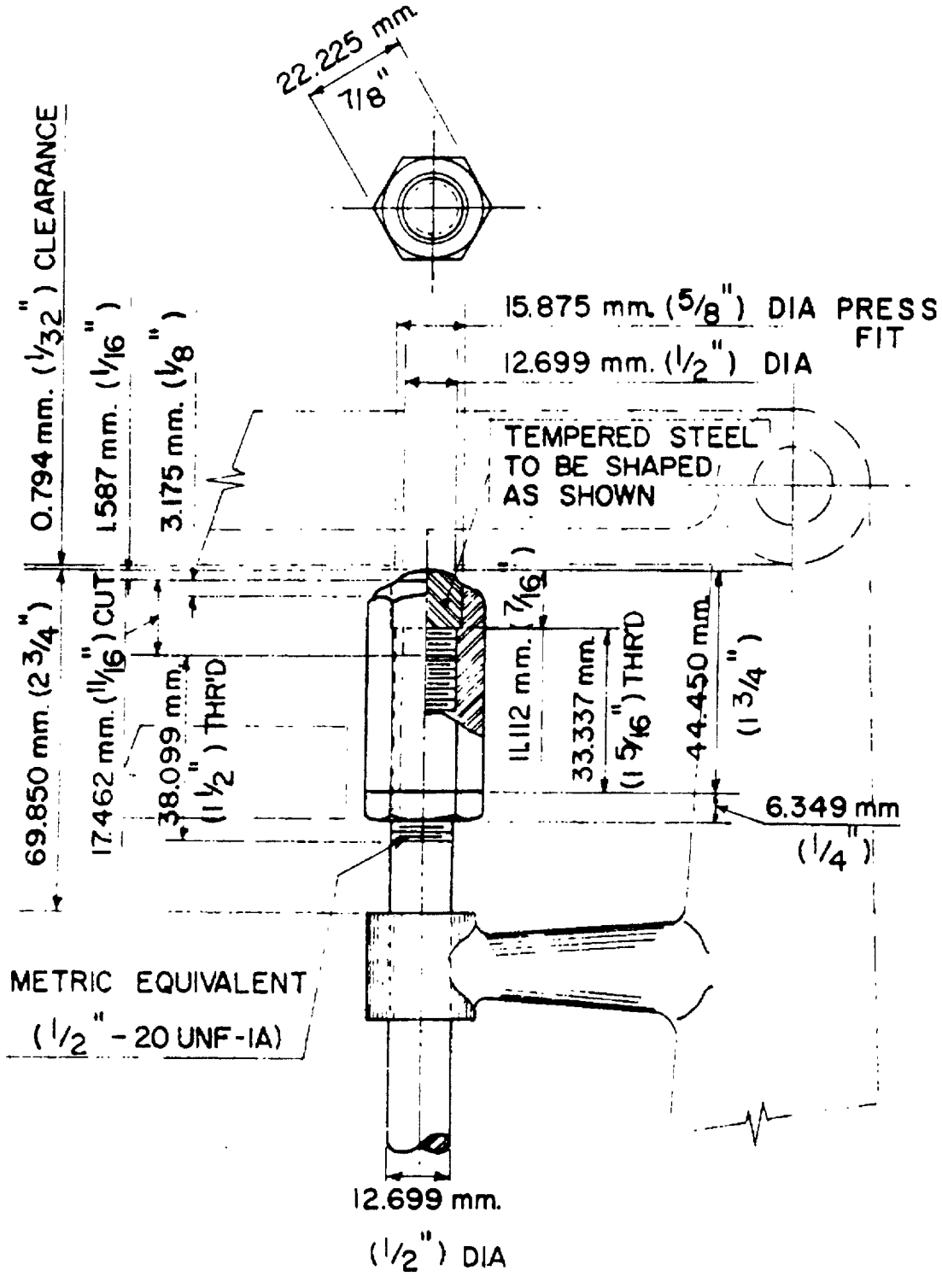

Fig.2 — Adjustable Push Rod



0415.A

Chrysotile Asbestos Test Manual

Third edition

ST0720416

B-3-74

AIR CLASSIFICATION

Revised and adopted by:

Asbestos Textile Institute -28 Feb 1974

Quebec Asbestos Mining Association - 3 Mar 1959

Printed in USA

ST0720417

B-3

AIR CLASSIFICATION

Scope

1. (a) This test indicates the relative proportions of dust (less than 40 microns), fibre, and granular material (rock) in a sample of milled asbestos fibre.

   (b) The percentage of these components in milled fibre furnish a guide to its cleanness and general degree of effectiveness when used in asbestos-cement products.

Apparatus

2. (a) Balance (sensitivity 0.01 gm).

   (b) Stop Watch.

   (c) Rectangular Metal Scoop, 1-3/4 x 7 x 1-1/2-in.

   (d) Six Inch Classifier with Mechanical Agitator and Accessories. (Refer to Figure 1, page 3). Also refer to construction details (Figure 2, Figure 3, Figure 4).

   (e) Orifice #3, 0.415-in. diameter.

   (f) Brass Tube 5 mm inside diameter, 3-in. long.

   (g) Rubber Stopper to fit small end of separator.

   (h) Wire 12-in. long (bent in hook shape at one end, see Figure 2, page 4).

   (i) Hose or Leather Strap 15-in. long.

   (j) 28 Mesh Tyler Standard Screen, 8-in. diameter.

   (k) 35 Mesh Tyler Standard Screen, 8-in. diameter.

   (l) Pan, 8-in. diameter, for above screens.

   (m) Ro-Tap Sieve Shaker.

Sampling

3. According to (A-1) "Method of Sampling and Preparation."

Procedure

4. (a)

Sample from Group	Sample Weight in gms	Air Jet Type	Test Time in Min.	Screen Mesh	*Ro-Tap Time in Min.
3	5	Tube	9	35	1
4	10	Tube	9	35	1
5	10	Tube	9	35	1
6	10	Tube	9	35	1
7	10	Tube	9	28	1

* Ro-Tap without hammer.

(b) Push the 5 mm diameter brass tube through the rubber stopper so that it does not project more than 1/8-in. beyond the small end of the stopper. Insert stopper in small end of separator and clamp firmly in place, in such a manner that this jet can rotate freely. Attach the radius arm of the agitator to the jet, and connect the jet to the flange containing the #3 orifice, by means of a 3-ft. section of 1/4-in. or 3/8-in. diameter rubber tubing.

(c) Charge the sample to the classifier by means of the rectangular scoop, then start agitator and turn on the compressed air and adjust the pressure so as to register 1.0 cm on the mercury manometer. Adjust water manometer to 8.0 cm and raise the mercury manometer to 15.5 cm. Start the stop watch. At three minute intervals shake the separator by striking it sharply with the short length of rubber hose or strap. Care must be taken to never strike the 6-in. diameter cylinder connecting the two cones.

(d) At the end of the time allotted for the fibre under test (see table) shut off the air and place screen (35 or 28 mesh) and pan under the separator. Remove the rubber stopper and let the fibre fall onto the screen. If it chokes in the opening, loosen it with the short length of wire used expressly for that purpose.

(e) Shake down the dust and rock on a section of the screen not covered by fibre, by rapping the two sides of the cone. Blow any remaining residue in the jet onto the rock laden section of the screen, using an air pressure of not more than 1.0 cm of mercury.

(f) Place the screen and pan in the Ro-Tap sieve shaker and run for one minute without using hammer. Weigh, to the nearest 0.01 gm, the material on the screen, and record as fibre. Weigh the contents of the pan and record as the granular content. Obtain the dust content by difference between the original sample weight and the combined weights of the fibre and granular contents.

Report

5. (a) Report the results in per cent.

(b) An example of the test results on a 6D fibre would be as follows:

Fibre	(+40 microns)	41.6%
Dust	(-40 microns)	46.4
Granular		12.0
		100.0

ST0720420

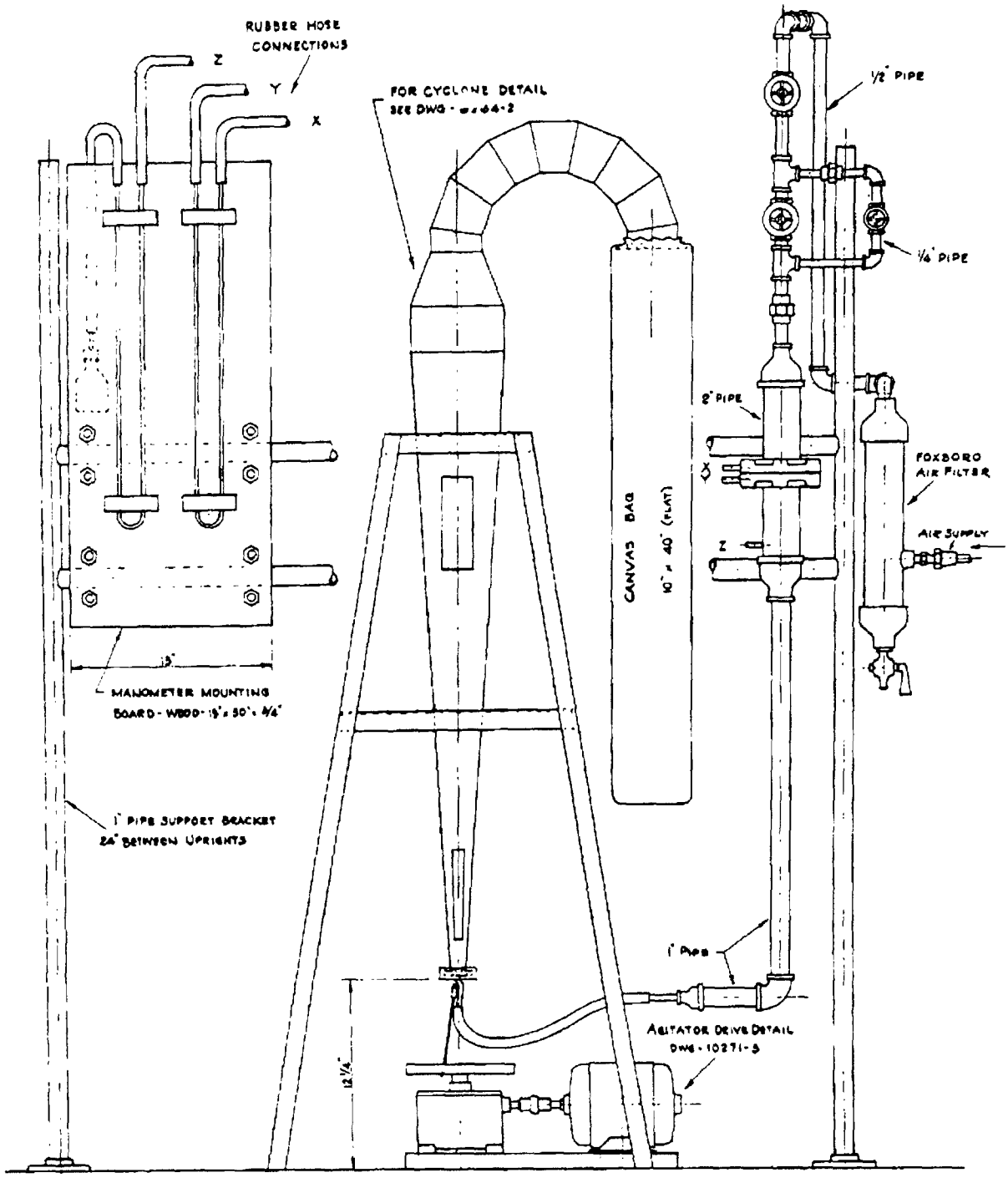

AIR CLASSIFICATION APPARATUS

FIGURE 1.

ST0720421

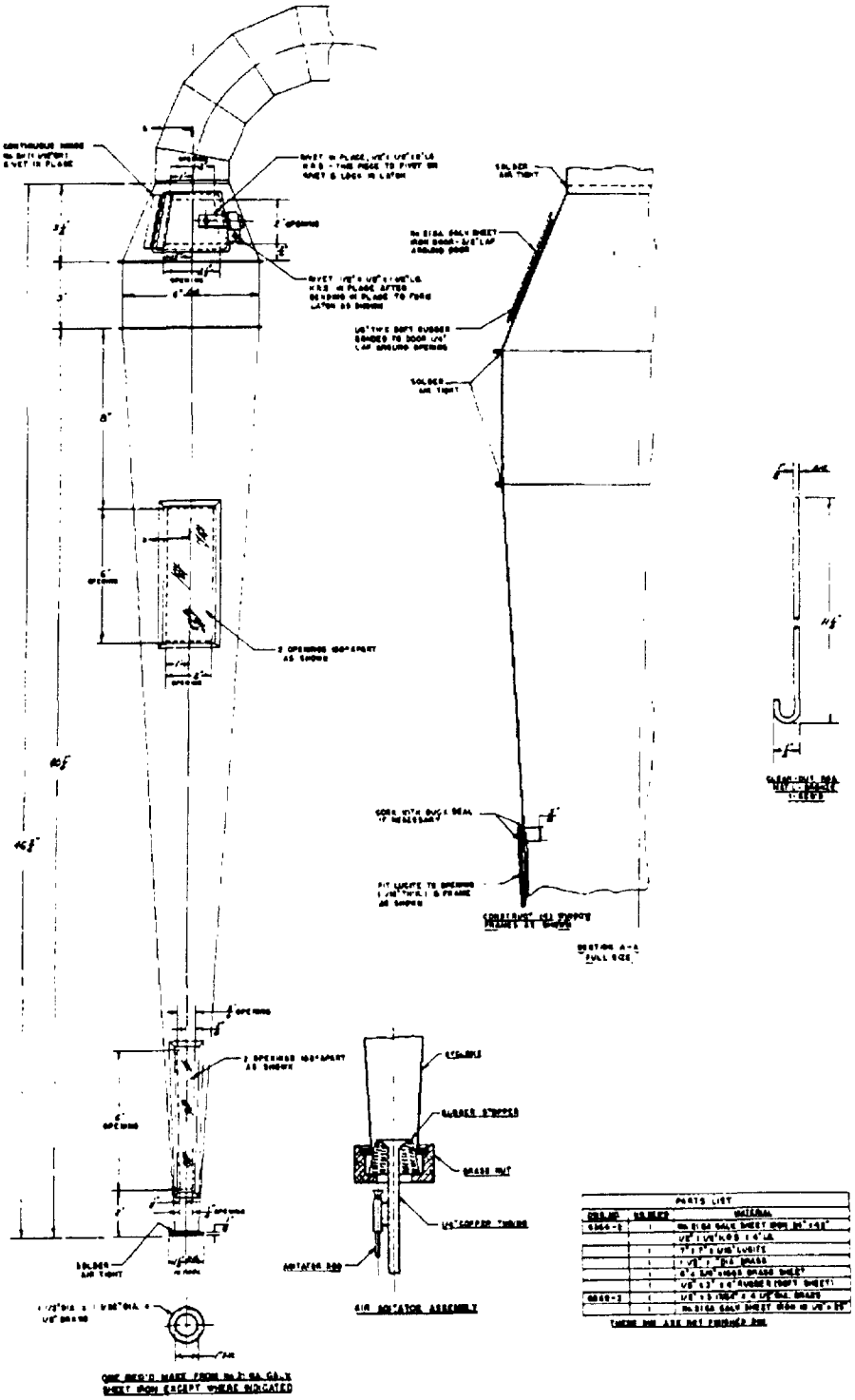

FIGURE 2.

ST0720422

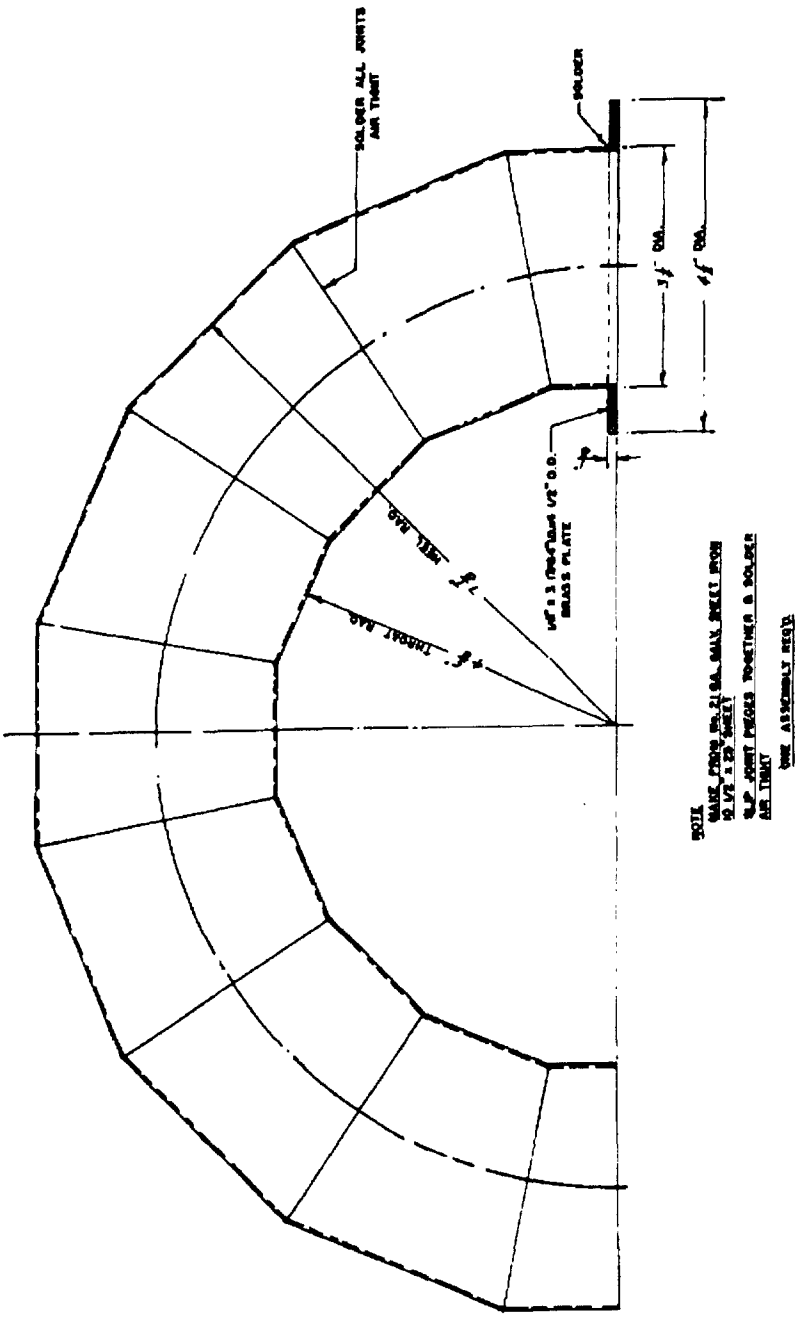

FIGURE 3

ST0720423

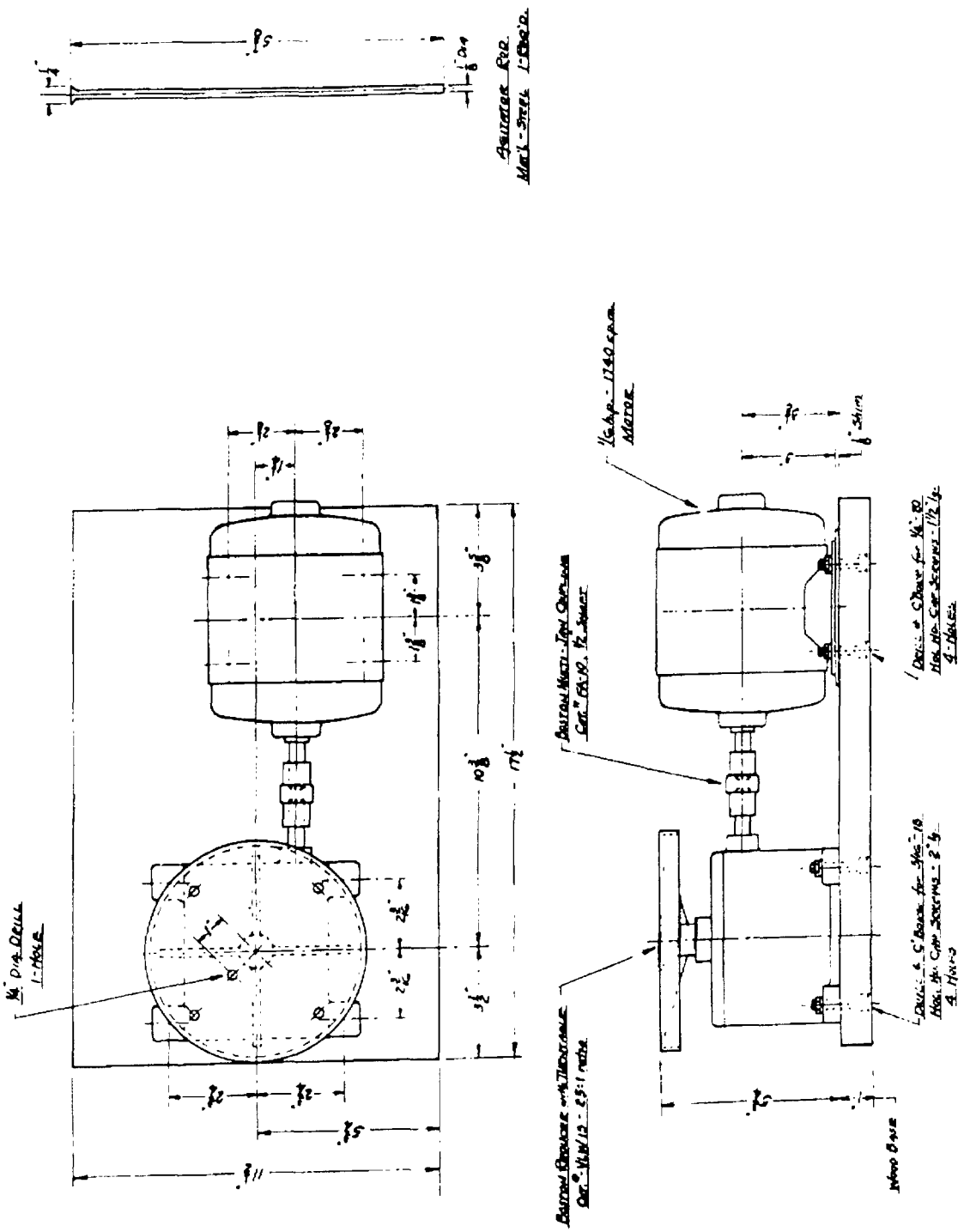

FIGURE 4

Chrysotile Asbestos Test Manual

Third edition

ST0720424

B-4-74

SUTER-WEBB CRUDY FIBRE PREPARATION

Revised and adopted by:

Asbestos Textile Institute - 28 Feb 1974

Quebec Asbestos Mining Association - 27 Apr 1961

Printed in USA

ST0720425

B-4

SUTER-WEBB CRUDY FIBRE PREPARATION

Scope

1. This method covers a procedure for preparing asbestos samples containing crudy bundles of fibre to permit the taking of the representative 200-mg specimen samples required for determining the mean length and length distribution by the Suter-Webb Comb method.

Outline of Method

2. A 25-gm sample of the crudy fibre is passed through rolls to flatten and part the hard and tight crudy bundles of fibre, then placed in an air opening apparatus to fiberize and disperse the flattened bundles to produce a sample which is homogeneous in character. The surface area of the resulting fibre is to be 4000 ± 300 sq cm per gm, reasonably free of hard, crudy bundles of fibre, and suitable for taking the representative 200-mg sample for the Suter-Webb comb test. The surface area objective of 4000 ± 300 sq cm per gm is obtained by "trial and error", but Section 6, covering the procedure, will indicate a method for obtaining the objective for fibres of different character.

Description of Terms

3. (a) Fiberized - Opening crudy bundles of fibre into thinner cross-sections.

   (b) Surface Area - As measured by the air permeability method based on D'Arcy's Law.

Apparatus

4. (a) Rolls and tray as illustrated in Figure 1.

   (b) Air opening apparatus as illustrated in Figure 2.

   (c) Balance sensitive to .1-gm, and having a range of at least 0 to 25-gm.

(d) Stop Watch.

(e) Paint brush, 2-in. or equivalent.

(f) Forceps.

(g) Screen, Tyler 10-mesh or equivalent.

(h) Surface area apparatus.

Sampling

5. (a) Sample - The sample shall be the laboratory test sample as prescribed by the (A-1) "Method of Sampling and Preparation," or other asbestos fibre sample.

(b) Specimen for Preparation - The 25-gm specimen sample shall be derived from the laboratory test sample. Quarter the laboratory test sample down to approximately 25-gm as prescribed by the procedure "Sampling and Preparation of Fibre," Part 2, (a) through (g).

6. (a) For average unmilled or semi-milled crude grades of asbestos containing a large percentage of crude fibre bundles:

Note 1: Applicable only to those crude grades containing fibre bundles which are easily opened, otherwise follow procedure described in paragraph 6 (c).

(i) Spread the 25-gm specimen sample evenly on the galvanized sheet tray so that the fibre is one inch from all edges. Pass the fibre-covered tray slowly through the rolls. The pressure exerted by the rolls to be such that the fibre-free end of the tray is firmly gripped by the rolls. Any large pieces of crude which may prevent the tray from being drawn through the rolls should be fiberized by hand and replaced on the tray. Remove any fibre adhering to the tray, top roll and rubber scraper. Take the flattened fibre and by passing it through the fingers locate and open any compressed or crudy bundles of fibre. Special care should be taken to fiberize the large diameter pieces of crude by flexing or brooming the ends, thus making them amenable to air opening. At least 15 minutes should be allotted to this operation.

(ii) Shake and fluff the flattened fibre, then put loosely into the can of the air opening apparatus. Distribute the fibre evenly over the bottom of the can. Fasten the lid securely.

Attach the 1/8-in. nozzle to the bottom of the can and place the hood with the perforated plate in position on top of the 100-mesh screen. Open the air valve quickly to a pressure gauge reading of 20 psi. After two minutes, close the air valve.

(iii) Remove the fibre from the can and again place on the tray and pass it through the rolls in the same manner as before. Again pass the fibre through the fingers, pulling apart the flattened fibre. A few large diameter pieces of crude may still be present and these are to be fiberized by hand. Five minutes is to be allotted to this operation.

(iv) Shake and fluff the flattened fibre, then put loosely into the opener can and air open for two minutes at 20 psi.

(v) Remove the fibre from the can and carefully pull apart any entangled fibre. With a brush clean the air filter twill on the lid by cleaning only a small area at a time to prevent the fibre from balling. Distribute the fibre from the twill evenly over the air-opened fibre and mix thoroughly.

(vi) Test for surface area. If the surface area should be higher than 4300 sq cm per gm, reduce the air blowing schedule. Should it be lower than 3700 sq cm per gm, increase the air blowing schedule. Visually inspect the fibre for crudy bundles. An acceptable prepared fibre should be reasonably free of hard, crudy bundles of fibre.

(b) For crudy or splintery milled fibres:

(i) Proceed as in (i) of Part 6 (a).

(ii) Follow step (ii) of Part 6 (a) with the exception that the air flow is maintained at 15 psi for 1-1/2 minutes.

Note 2: When required, fibres in this class may be air-opened to a surface area of 8000 ± 500 cm^2/gm to condition any tight crudy fibre bundles present by blowing with air at 20 psi for two minutes. Any hard bundles remaining, after a surface area of 8000 ± 500 cm^2/gm has been developed, shall be sorted out and fiberized by hand or treated separately in the air-opening device. Use procedure described in Part 6 (c) for fibres containing a profusion of tight, hard bundles.

(iii) Remove the fibre from the opener can and proceed as per steps (v) and (vi) of Part 6 (a).

(c) For unmilled or semi-milled crude grades of asbestos containing a large percentage of very hard and tight crudy fibre bundles and considerable magnetite:

(i) Proceed as in (i) of Part 6 (a). Fiberize only the large crudy fibre bundles which can be hand opened without effort.

(ii) Shake and fluff the compressed specimen sample by hand, then form into a cone. Starting from the top of the cone, remove the fibre in small portions, using forceps. The remaining crudy bundles will end up at the bottom of the cone. By hand, fiberize all the crudy fibre bundles and spread over the sample.

(iii) Place the sample on a 10-mesh Tyler sieve, or equivalent, and shake for 15 seconds. Set aside the minus 10-mesh material, which will contain, besides fibre, most of the magnetite.

(iv) Place the plus 10-mesh fibre in the air opener can and air open in the same manner as step (ii) Part 6 (a) for three minutes at a pressure of 20 psi.

Note 3: Use air flow for four minutes at 20 psi for grades containing a profusion of hard crudy bundles, which are difficult to open.

(v) Proceed as in (v) Part 6 (a). A small amount of magnetite and a few crudy fibre bundles may report on the bottom of the air opener can. If so, combine with the minus 10-mesh material.

(vi) Spread the minus 10-mesh material on the tray and pass through the rolls. Pull apart and fluff any flattened or hard crudy pieces of fibre and add to sample. Mix sample thoroughly.

(vii) As most of the magnetite is loosely held in the sample, it is considered necessary to remove the major part of this granular material as it is likely to cause erratics in the combing results. Most of the magnetite can be eliminated by the following procedure: Thoroughly shake and fluff the prepared fibre by hand and form into a cone. With forceps starting at the top of the cone take small portions of fibre and set aside. Most of the magnetite, with a small amount of fibre, will end up on the table at the bottom of the cone. With the brush pick out the fibre and mix with the prepared sample. Discard the magnetite. Repeat the coning and fibre removal operation. A small amount of magnetite will still remain in the sample, but not

sufficient to affect the reproducibility of the Suter-Webb sorter test.

(viii) Take surface area test, then proceed as in step (vi) Part 6 (a).

Report

7. Record the procedure finally adopted to prepare a given sample, and the surface area of the fibre tested, on the Suter-Webb report form for future reference.

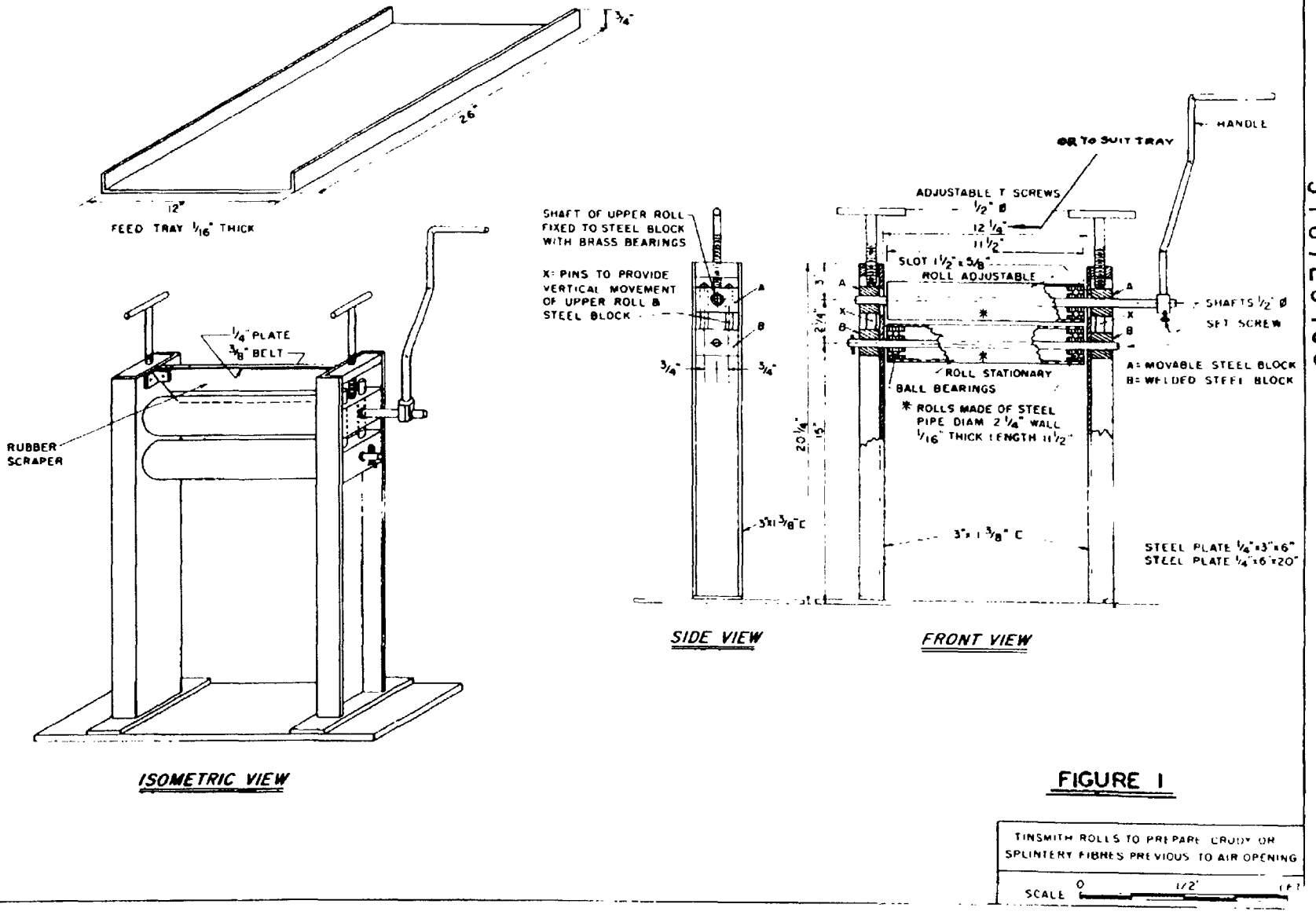

FIGURE 1

TINSMITH ROLLS TO PREPARE CRUDE OR SPLINTERY FIBRES PREVIOUS TO AIR OPENING

SCALE 0 1/2' 1 FT

ST0720430

ST0720431

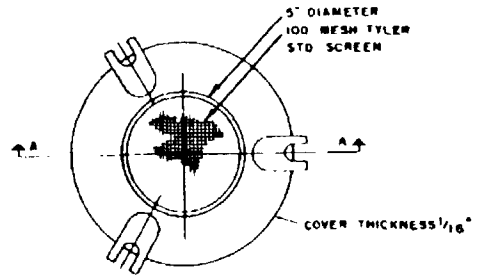

COVER

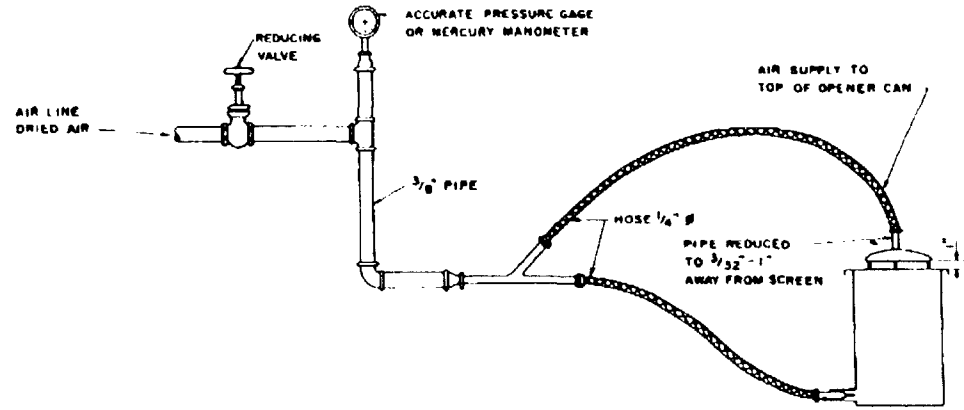

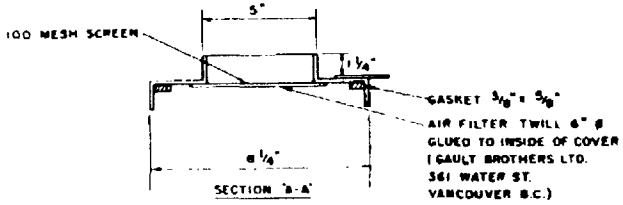

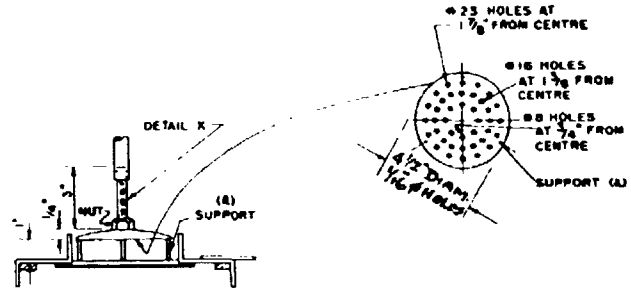

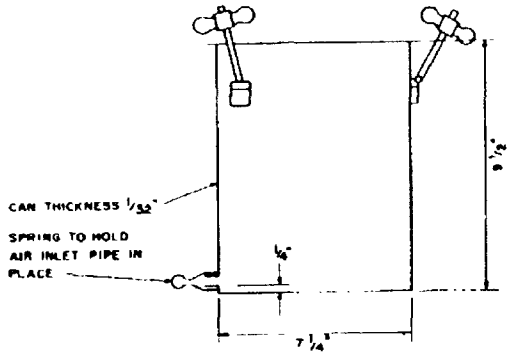

AIR OPENER CAN
FRONT VIEW

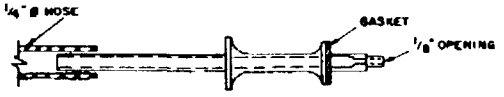

DETAIL A
AIR INLET PIPE

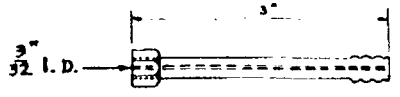

DETAIL X

FIGURE 2

AIR OPENING DEVICE FOR ASBESTOS FIBRES	
SCALE	0 1/2" 1FT

B-4/8

Chrysotile Asbestos Test Manual

Third edition

ST0720432

B-5-74

SUTER-WEBB COMB

Revised and adopted by:

Asbestos Textile Institute - 28 Feb 1974

Quebec Asbestos Mining Association - 16 Mar 1965

Printed in USA

ST0720433

B-5

SUTER-WEBB COMB

Scope

1. This test is intended primarily for determining the weighted mean fibre length of a sample of asbestos containing few or no crudy bundles of fibre.* In addition, the data obtained in the test can be used to calculate the percentage of fibre by weight in each 1/8-in. length group. These in turn can be used for a detailed study of length distribution. This test is usually performed only on textile grades.

Description of Terms

2. (a) Weighted Mean Fibre Length - The average length of all the fibres in the sample, based on weight-length data.

   (b) Crudy Bundles - Many fibre filaments still grouped together as hard, unopened bundles.

   * The treatment for asbestos samples containing a high percentage of crudy bundles is explained in the test method titled (B-4) "Suter-Webb Crudy Fibre Preparation."

Outline of Method

3. A sorting apparatus consisting of parallel combs spaced at 1/8-in. intervals, is used to align the fibre in a 200-mg specimen. The fibres are paralleled in the series of combs in such a manner that all fibre lengths are grouped from a base comb. The different lengths are separated by dropping combs consecutively and the fibres in each length group are collected and weighed. From these data the weighted mean length and length distribution can be calculated.

Apparatus

4. The following alternative pieces of equipment may be used:

   (a) (1) The Suter-Webb Comb Sorter modified for combing asbestos fibres, with accessories, supplied by Alfred Suter Company, 200 Fifth Avenue, New York 10, New York, U. S. A.

   (a) (2) The Turner Comb Sorter, with accessories, supplied by Turners Asbestos Fibres Limited, Faulkner House, Faulkner Street, Manchester 1, England.

(b) Fibre grippers (as supplied with Turner Comb Sorter).

(c) Hand comb (as supplied with Turner Comb Sorter).

(d) Analytical balance having a range of at least 0 to 200 mg (sensitive to 0.1 mg).

(e) Tared watch glasses or slides for weighing.

(f) Sampling board (Figure 2).

(g) Velvet covered plate (as supplied with Suter-Webb Comb).

(h) Dissecting needle.

(i) Tweezers.

Sampling

5. Test Specimen

(a) As many 25-gm comb sorter samples as are required shall be derived from the laboratory sample in accordance with (A-1) "Method of Sampling and Preparation."

(b) Only one comb sorter specimen shall be derived from each 25-gm sample.

(c) The tests specimen is then derived from the 25-gm comb sorter sample in the following manner (see also Schematic Presentation. Section 5 lettering corresponds with the Schematic lettering Figure 1).

(d) Divide the 25-gm sample into ten equal piles in two columns of five.

(e) Divide each pile in one operation into two equal parts, and discard the inner piles, the total weight remaining then being approximately 12-gm.

(f) Recombine and mix the remaining piles and again divide into ten piles in two columns of five.

(g) Divide each pile in one operation into two equal parts and discard the outer piles, the total weight remaining then being approximately 6-gm.

(h) Recombine and mix the remaining halves and divide into five piles.

(i) Divide each pile in one operation into two approximately equal parts and discard one row of piles, the total weight remaining then being approximately 3-gm.

(j) Take approximately 200-mg from each pile of the remaining piles to make a total of 1-gm.

(k) Spread the 1-gm sample in a thin layer over the area of 8-in. x 8-in. on the sampling board in such a manner that pinches can be taken from all parts. Any entangled fibre and crudy bundles should be carefully separated with dissecting needle and tweezers, and distributed over the area of the board. From each of the five marked areas take a tuft of fibre, to make a total weight of 200 ± 1-mg.

(l) All sampling and measuring should preferably be conducted at uniform temperature and humidity in accordance with (A-1) "Method of Sampling and Preparation."

Test Procedure

6. (a) Taking the whole of the 200-mg specimen, arrange the fibres in a parallel oval bundle between the finger and thumb of one hand, with the fibre ends corresponding to form an even head.

(b) Grip the fibre ends in this head with grippers. The ends of the fibre must extend into the grippers to the same extent as the leather pad on the lower jaw of the grippers.

(c) Withdraw the tuft of parallel fibres held by the grippers, lengthwise from the remainder of the specimen, and comb them with the hand comb to remove any adhering fibres which are not properly gripped.

In combing by hand, the comb is inserted alternately from above and below the tuft held in the grippers, starting near the free ends of the tuft and working progressively, in approximately 1/8-in. steps, towards the grippers. Not more than ten strokes of the comb in all should be made on any one tuft.

(d) Straighten the tuft of fibres, which finally remains in the gripper, gently with finger and thumb and lay them across the banks of combs in the sorter, with the jaw of the fibre gripper held lightly against the pins of the last comb, and gently press down the fibre tuft using the depressor, to not more than half the depth of the pins.

(e) When laying fibre across the combs, keep the grippers horizontal so that the slight downward movement required to engage the fibres with the pins of the comb does not involve tilting the grippers.

When the fibres are held in the pins of the combs the grippers can be released and removed, and the first application of the depressor should include the fringe of fibres which project from the last comb.

When so laid, the fringe of fibre should protrude 0.10 to 0.11 inches beyond the first comb.

(f) Recombine the loose fibres, separated on the hand comb, with the remainder of the specimen, and repeat steps 6 (a) and 6 (e) until the specimen has been transferred to the combs in the sorter. Fibres too short for insertion into the combs are combined with the knots in 6 (g).

(g) In the process of hand combing, small knots of fibre, caught in the comb teeth and impossible to disentangle into parallelism, may be formed. Do not place these in the comb sorter but set them aside until a later stage in the procedure.

(h) When all the fibres which can be parallelized have been placed in the comb sorter, turn the sorter around so that the combs nearest the operator are those which do not contain any fibre. Lower these combs successively until the longest fibres are seen protruding from the next comb.

(i) Using the grippers, withdraw the protruding fibres. Collect the fibres which have been withdrawn and roll them on the velvet-covered plate.

(j) Lower the next comb and withdraw the next group of fibres. Repeat this procedure until the last comb is reached. When the fibres projecting from this comb have been removed collect the fibres which remain entangled with the comb, combine them with the knots of fibre set aside earlier (Paragraph 6 (g)). Any fibres on and around the sorter are collected and also combined with the knots. The groups of fibre, with short spacing between groups, are now on the velvet-covered plate.

(k) Weigh the groups of fibre and also the short fibres that could not be placed in the combs. If the sum of the weights differs from 200-mg by more than 10-mg the test is repeated. Other weighing sequences are permissible providing there is no loss of fibre.

Calculations and Report

7. (a) The mean group length of the fibres remaining on the last comb, together with the knots and fibre that could not be placed in the combs, is taken as 1/16-in., the length of the fibres withdrawn by the grippers with one comb raised is 3/16-in., with two

combs raised is 5/16-in., and so on. The weighted mean fibre length of the whole specimen is calculated to the nearest 0.01-in., using the following formula:

$$\text{Weighted Mean Fibre Length} = \frac{\text{(Mean Group Length x Group Weight)}}{\text{Total Weight Collected}}$$

(b) For each laboratory sample make two determinations for weighted mean fibre length. If the difference between the two results is greater than ten per cent of their average value, a third test should be made. In the event of agreement with one of the first two tests, the disparate result is rejected. If the third result differs from the mean of the first two results by more than ten per cent, the whole test, including the sampling from the laboratory sample, is repeated.

(c) The mean of the two accepted results is the weighted mean fibre length of the sample. Report to 0.01-in.

(d) The percentage weight of fibres in each 1/8-in. length group may be plotted to illustrate the fibre length distribution.

ST0720438

FIGURE 1

PROCEDURE FOR TAKING A COMB SORTER SAMPLE

(SCHEMATIC)

A. BULK SAMPLE

For example 5 - 10 lb
(2½ - 4½ kg)

B. Remove from the bulk sample, by coning and quartering, a test sample of 8 - 12 oz
(230 - 340 gm)

C. By further coning and quartering the test sample, remove as many 25 gm specimens as required. Each of these is to be dealt with as described in D - K below.

D. Divide the 25 gm into ten equal piles in two columns of five

E. Divide each pile in one operation into two equal parts, and discard the inner piles.

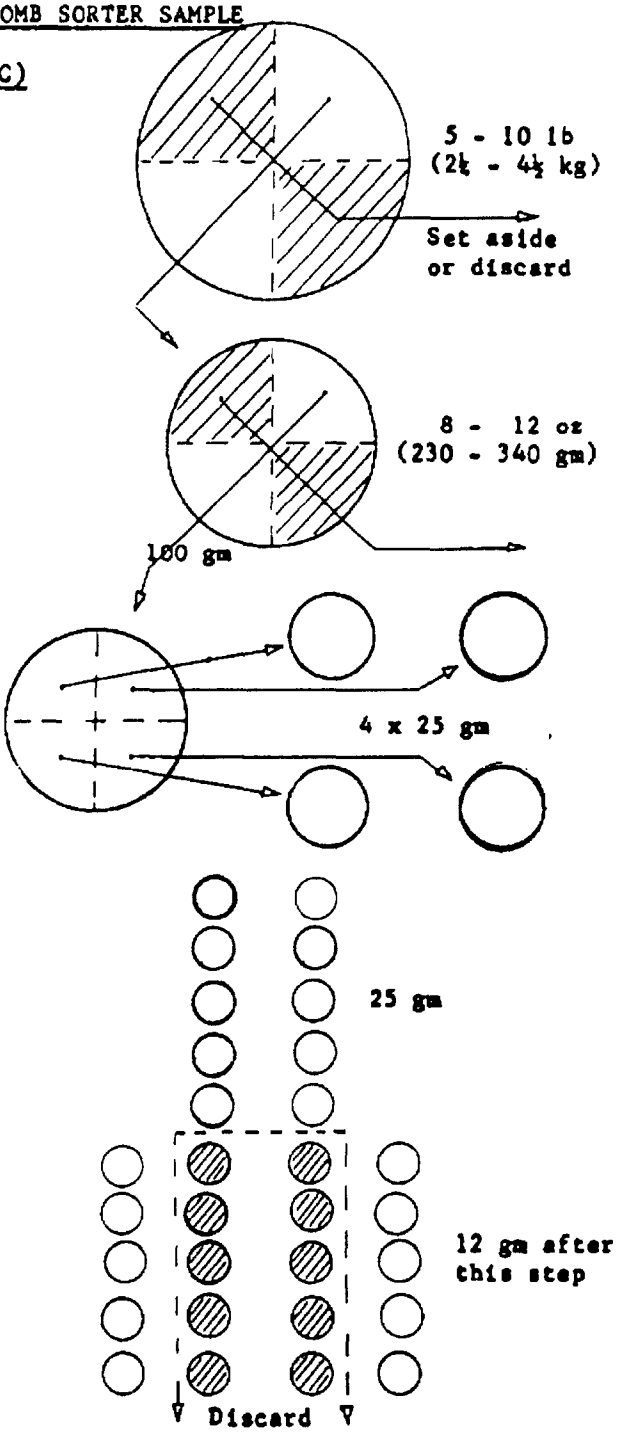

B-5/7

ST0720439

F. Recombine and mix the remaining piles (total weight 12 gm) and again divide into ten piles in two columns of five.

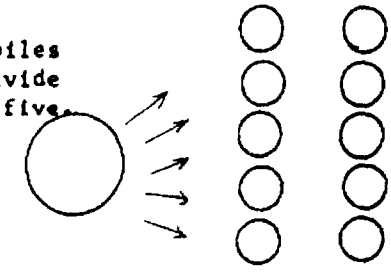

12 gm

G. Divide each pile in one operation into two equal parts and discard the outer piles.

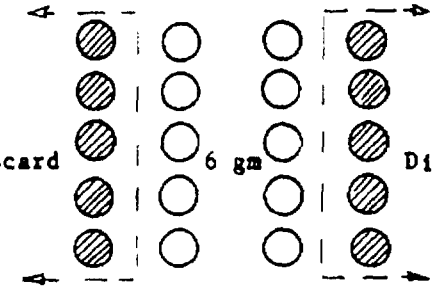

H. Recombine and mix the remaining halves and divide into five piles.

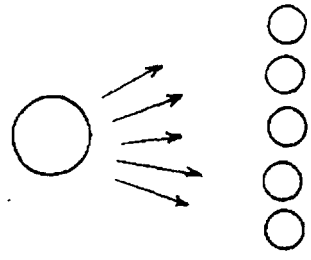

6 gm

I. Divide each pile in one operation into two equal parts and discard one row of piles.

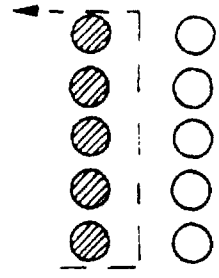

3 gm after this step

J. Take approximately 200 mg from each of the remaining piles to make a total of 1 gm.

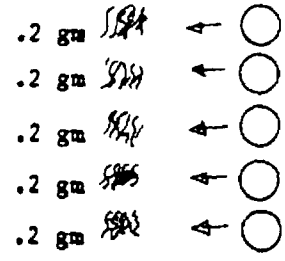

K. Spread the 1 gm on a clean sampling board (see notes and diagram) and from each of the five marked areas take a tuft, to make a total weight of 200 mg ± 1 mg.

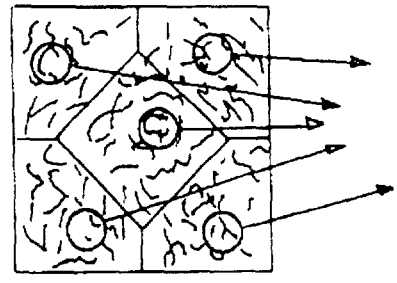

200 ± 1 mg

ST0720440

FIGURE 2

COMB SORTER TEST

SAMPLING BOARD FOR

SELECTING FIVE TUFTS FOR

FINAL 200 ±1mg TEST SPECIMEN

Board to have smooth surface, preferably black,
and marked in white as shown.
Edge moulding to be smooth and finished black.

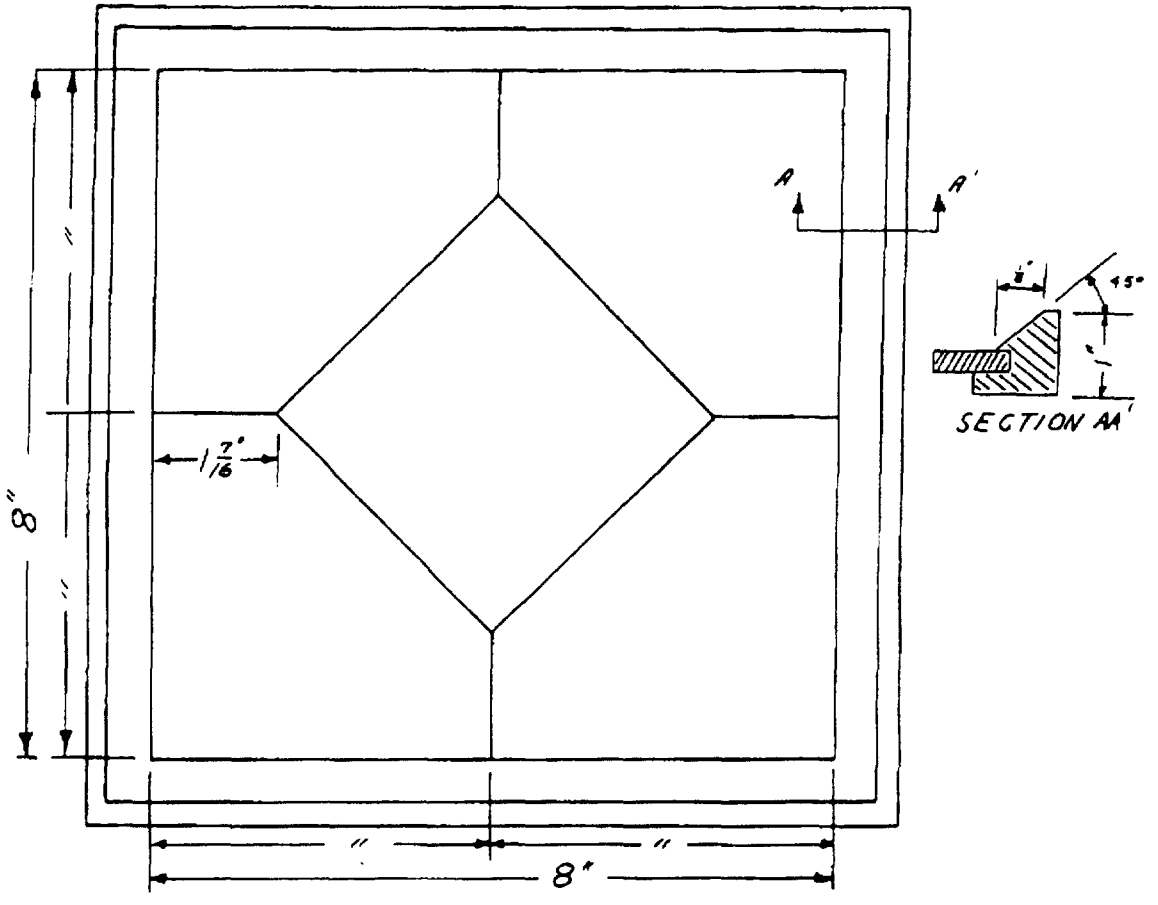

Chrysotile Asbestos Test Manual

Third edition

ST0720441

C-1-74

BAUER McNETT WET CLASSIFICATION

Supersedes Method C-1 of the 1966 second edition

Revised and adopted by:

Asbestos Textile Institute - 28 Feb 1974

Quebec Asbestos Mining Association - 29 May 1973

Printed in USA

ST0720442

Method for

BAUER McNETT WET CLASSIFICATION[1]

Designation C-1-74

1. Scope

1.1 This method covers the determination of the length distribution and fines content of milled chrysotile asbestos fiber by wet classification employing the Bauer-McNett fiber classifier.

2. Significance

2.1 Normally, results obtained by this method are reproducible under comparable laboratory conditions. However, it must not be expected that results obtained by different operators at various laboratories and times will be in exact agreement due to some seemingly minor procedural change. Moreover, results for longer fiber grades are influenced to a greater extent by differences in fiber length distribution and characteristics than those of shorter grades.

3. Apparatus

3.1 Bauer-McNett Fiber Classifier 203-A or 203-CA,[2] preferably equipped with vacuum suction cups for drainage, similar in design to that shown in Fig. 1, or on page 7 of the Service Manual 203-CA (see service manuals for identification of classifiers' parts, and refer to Figs. 2, 3 & 4).

Note 1 - Drainage through muslin filter cloths or 200-mesh sieve (325-mesh for float products) is acceptable.

3.2 Accessories:

3.2.1 Filter Paper to fit vacuum cups on classifier. This shall be thin, rapid filtering, ashless paper hardened to provide adequate wet strength and resistance to washing. Alternatively, 325-mesh screen cloths mounted in suitable metal rings may replace filter papers (see Note 5 in 9.2.4).

3.2.2 T-Shaped Soft Rubber Scraper for cleaning screens, made

from a 100-mm (4-in.) length of automobile windshield wiper, or equivalent, held in a suitable handle, similar to a hoe (Fig. 5).

3.2.3 Rubber Pressure Hose, 6-mm (¼-in.) bore with control valve nozzle for rinsing classifier screens and tanks with filtered water.

3.2.4 Drying Oven (convection type, or mechanical draft), or infrared drying unit.

3.2.5 Automatic Overflow Alarm, as shown in Annex A1.

3.2.6 Optional Accessory -- Automatic clearing device on the fourth tank, as shown in Annex A1 (see Note 3 in 9.2.4).

3.3 Water Supply -- Provide a suitable filtering device on the water supply to ensure a constant flow of clean water to the classifier and rinsing hose.

4. Sampling

4.1 Select samples in accordance with Method A-1[4]. Duplicate specimens shall be tested.

5. Test Specimen, Screen Sizes, and Test Duration

5.1 Relationships between the type of specimen, screen sizes, weights[3], and duration of test may be found in Table 1.

5.2 For reference Tyler, U.S. Standard and British Standard equivalent sieves are listed in Table 2.

5.3 Screen cloth must be double-crimp style of plain weave (square weave) and must conform to specifications given in Section 2 on Sieve Cloth, of ASTM Specifications E 11 for Sieves for Testing Purposes[5]. Screen cloth must be mounted with the warp in the horizontal direction.

6. Procedure

6.1 Select screens specified for the fiber grade being tested and set in place, making certain that the baffle plates are in their slots behind the screens.

6.2 Insert the rubber stoppers, and fill the tanks with water.

6.3 Start the agitators to rotate at 540 ± 40 rpm and adjust

the water valve to give a flow slightly in excess of 0.19 dm^3/s (3.0 U.S. gal/min). This rate of flow is achieved when the overflow from the constant head tank is pencil-size.

6.4 Add the test specimen to 800 cm^3 of water in a 1000-cm^3 beaker and stir until the asbestos is thoroughly dispersed.

6.5 Pour the slurry into the first tank (tank with the coarsest screen mesh) and wash out any fiber residue in the beaker with clean, filtered water. Set the timer for 1.2 or 1.8 ks (20 or 30 min), depending upon the sample under test.

6.6 During the operation, center the filter papers, previously weighed to the nearest 0.01 g at equilibrium with room conditions, in vacuum cups on the supporting screen. Mark the weight of the filter paper, sample designation, classifier screen mesh, and other pertinent data around the outside edge of each filter paper with a soft black pencil before inserting into the vacuum cup, placing the writing against the supporting screen. Wet the filter paper and clamp into position.

6.7 Close the main vacuum valve and open each vacuum cup valve.

Note 2 - It is advantageous to perform the above two steps during the time in which the classifier tanks are initially being filled.

6.8 Watch screens carefully during the test, and if any tank appears to overflow, clean the screen surface with a soft rubber scraper.

6.9 At the end of the test period, stop the impellers, shut off the water, and open the main vacuum valve until a vacuum of approximately 0.1 m (4 in.) of water gauge is attained. Remove the drain plugs from each tank, and progressively increase the vacuum to the maximum desired. Failure to perform this operation slowly, or to remove all the drain plugs before any one tank is completely drained, may cause rupture of the filter papers.

6.10 During draining, remove the screens and place them in their respective tanks. Immediately after a tank has been completely drained, carefully wash the screen and tank to ensure that all remaining fiber, including entrapped fiber and particles deposited behind the screen, are washed into the vacuum cup.

6.11 When all the fiber in a tank is deposited into the vacuum cup, and the cup itself has drained, close the cup valve. Failure to close the cup valve after washing down and emptying the tank causes atmospheric air to enter the vacuum system and substantilly lowers the vacuum of the system.

6.12 After closing the cup valve, open the cup and remove the

filter paper with its classifier specimen fraction, and dry to constant weight at 105 to 110 °C(220 to 230 °F) under an infrared unit, or in a drying oven.

6.13 After all the fractions are dried and allowed to return to equilibrium with room conditions, weigh each paper and fraction together. Obtain the net weight of the specimen fraction by subtracting the initial weight of the filter paper and record as a percentage. The amount of minus 200 mesh or minus 325 mesh in the original specimen is calculated by subtracting the cumulative weight of the fractions retained on the filter papers from the original weight of the specimen (see Note 6 concerning crudy fibers).

7. Results and Sample Calculations

7.1 A typical example of a Group 5 fiber wet classification test (10-g specimen, 1.2-ks (20-min) test duration) with calculations follows:

Screens (Tyler mesh)		4		14		35	200		Minus 200
Weight retained, g		0.5		1.3		1.0	1.4		...
Minus 200 mesh, g	10.0 -	(0.5	+	1.3	+	1.9	+ 1.4)	=	4.9 g
Results, percent		5.0		13.0		19.0	14.0		49.0%

8. Report

8.1 Report the percentage of fiber retained on each screen size and the percentage passing through the last screen. Fully identify the origin and description of the sample.

9. Precision and Accuracy

9.1 If the corresponding individual percentages obtained for each screen fraction of the duplicate specimens differ by more than five units of percentage, make a third test. Average the results of two acceptable tests and report the average.

9.2 To obtain the desired accuracy, the following general precautions should be observed:

9.2.1 It is important that all material be washed from the tanks into the vacuum cups; and that the filter papers are

handled with care.

9.2.2 For better accuracy and reproducibility a water temperature of 21 ± 10 °C (70 ± 20 °F) is recommended.

9.2.3 New screens should be run-in at least 30 ks (8h) to condition them before they are put into regular use. Preferably screens should be run-in to give results within acceptable limits (refer to 9.1) on a standard reference fiber specimen. When the classifier is not in use, the tanks should be kept full of water to prevent deposits from forming on screens.

9.2.4 To obtain prescribed accuracy, screens should not be cleaned during a classification, unless the tanks tend to overflow. Test results may not be reproducible when screens are cleaned frequently and at irregular intervals during the test.

Note 3 - At many laboratory locations, the use of an automatic clearing device on the fourth tank, similar to that shown in the Appendix with the motor connected in series with the micro switch of the overflow alarm or on a separate switch, has been found to eliminate the necessity for clearing the screen.

Note 4 - At some laboratory locations, the use of stainless steel screen cloth has been found to give reproducible results over a longer period of time.

Note 5 - When classifying very fine products use filter papers for better accuracy.

Note 6 - In the case of crudy fibers, the classified fractions may be retained for examination and the percentage of crudy bundles and rock particles determined by an approved method.

9.3 The following precautions apply to Model 203-A classifiers only:

9.3.1 Screens should be checked regularly (at least once every operating shift) for damage, holes, warped frames, etc. Likewise, the rubber gaskets should be examined and replaced if defective as this is frequently the cause of abnormal minus 200 mesh results. The clamping screws should be turned tight enough to hold the screen plates firmly against the tank; but if turned too tight, or not uniformly, the screen frames may be permanently warped out of shape causing leakage past the gaskets.

9.3.2 The normal agitator speed (540 ± 40 rpm) should be checked regularly, and the belts should be inspected to prevent slippage. The use of positive traction belts and sprockets is recommended.

9.3.3 The equipment must be lubricated and maintained as described in Service Manual 203-A.

ST0720447

9.4 The following precautions apply to Model 203-CA classifiers only:

9.4.1 Screens should be checked regularly (at least once per operating shift) for damage, holes, warped frames, etc.

9.4.2 The equipment must be lubricated and maintained as described in Service Manual 203-CA.

ST0720448

ANNEX

A1. AUTOMATIC OVERFLOW ALARM AND CLEARING DEVICE FOR SCREENS

A1.1 Figs. A1 and A2 illustrate a suitable method of mounting float switches to activate an automatic overflow alarm, and a clearing device for installation on the fourth tank of the classifier. Details for a suitable screen-clearing device are shown in Figs. A3 to A6. The support must be fabricated to fit individual classifiers due to slight differences in pertinent dimensions. Figure A1 also gives appropriate dimensions for locating the axis of the clearing device with respect to the classifier tank.

TABLE 1 Screen Size, Test Specimen and Duration Relationships

Test Specimen, Q.S.[a] Fiber Group	Screen Sizes, Tyler Series Mesh Designations	Specimen Weight g	Duration of test ks	Duration of test min
3, 4, 5, 6 and 7D	4, 14, 35, 200	10 ± 0.05	1.2	20
Other Group 7 fibers	14, 35,100, 200	20 ± 0.05	1.2	20
Floats[b]	80, 325	20 ± 0.05	1.8	30

(a) Quebec Standard (Q.S.) designation of chrysotile asbestos grades.

(b) Floats designates air-lifted grades produced from the fines recovery system of an asbestos mill.

ST07204h49

TABLE 2 Sieve Equivalents

Standard Designations		Alternative Designations		Aperture Sizes[b] Tyler, U.S.A., & British	
Tyler Mesh per in.	U.S.A.[a] and British	U.S.A. No.	British Mesh (approx) per in.	mm	inch (approx.)
4	4.75 mm	4	3.5	4.75	0.187
14	1.18 mm	16	14	1.18	0.0465
35	425 µm	40	36	0.425	0.0167
80	180 µm	80	85	0.180	0.00709
100	150 µm	100	100	0.150	0.00595
200	75 µm	200	200	0.075	0.00295
325	45 µm	325	250	0.045	0.00177

(a) Identical with ASTM Standard sieves and ISO Standard apertures.

(b) Apertures are now equal for the three series.

ST0720451

FOOTNOTES

1. Supersedes designation C-1 in the 1966, second edition. Dates of approval or latest revision: Asbestos Textile Institute, adopted 7 Oct 1965, latest editorial revision, 28 Feb 1974; Quebec Asbestos Mining Association, adopted 29 Mar 1973, latest editorial revision, 14 Mar 1974.

2. Currently supplied classifier Model 203-CA and service manuals for the installation, operation and maintenance of Models 203-A and 203-CA are available from the Bauer Bros. Co. Ltd., Brantford, Ont., Canada.

3. For referee testing, use the SI (Systeme International) metric units.

4. Appears in Chrysotile Asbestos Test Manual, third edition, available from Quebec Asbestos Mining Association, 580 Grande Allée East, Suite 320, Quebec, P.Q., Canada, G1R 2K2.

5. Annual Book of ASTM Standards, Part 41.

ST0720452

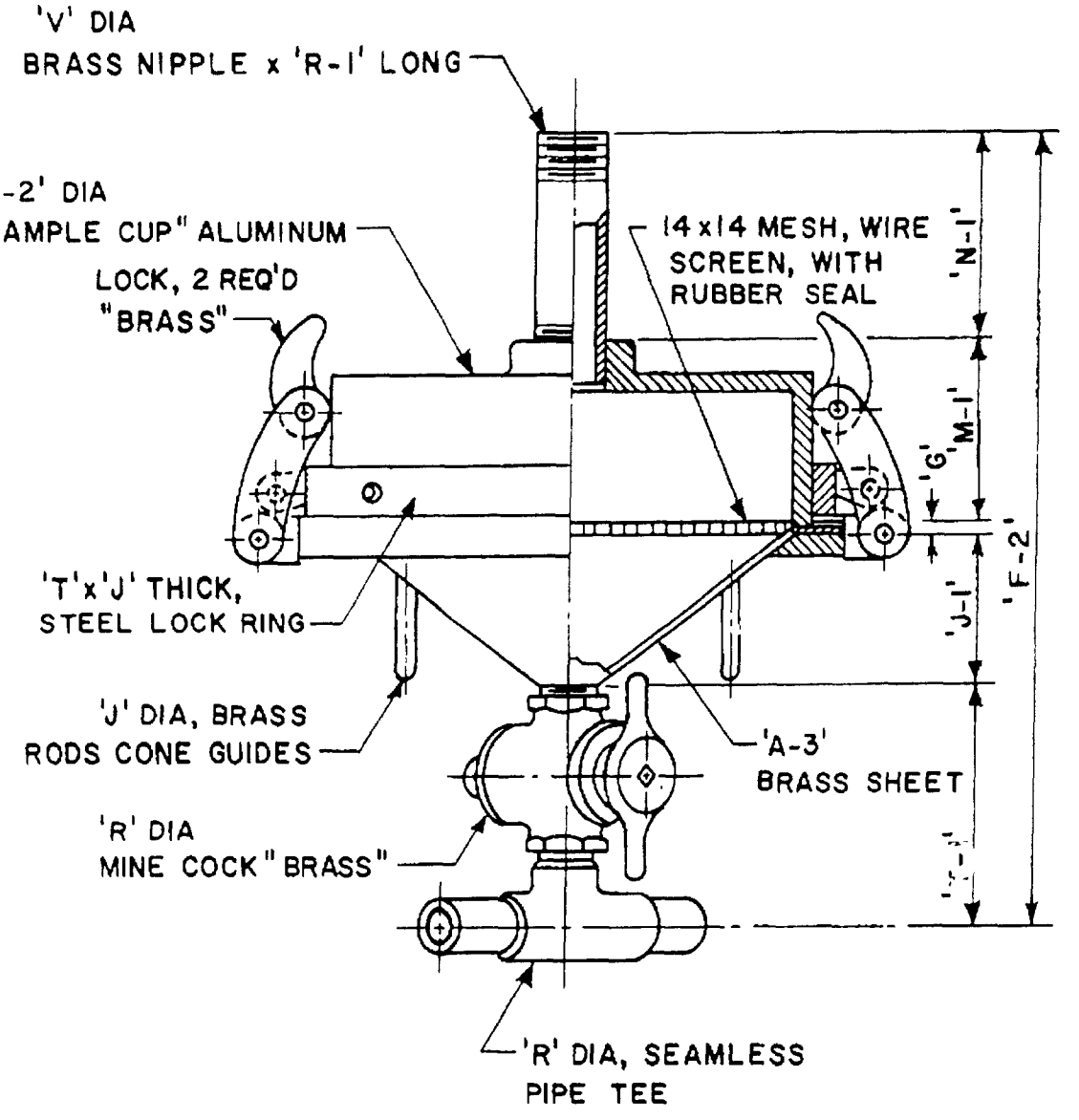

LEGEND

Symbol	mm	Inch	Symbol	mm	Inch
G	5	3/16	N-1	65	2-9/16
J	6	1/4	R-1	78	3
R	13	1/2	T-1	82	3-1/4
T	16	5/8	D-1	180	7
V	19	3/4	F-2	270	10-1/2
J-1	50	2	A-3	2.6	12 Ga.
M-1	63	2-1/2			

Fig. 1- Vacuum Cup for 185 cm Dia Filter Paper C-1/12

ST0720453

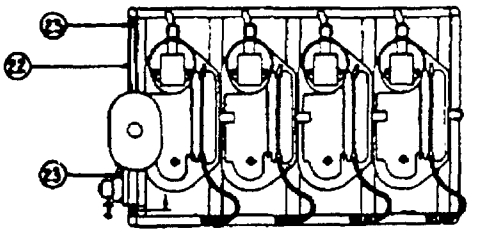

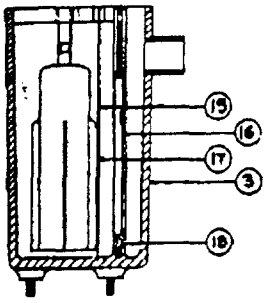

Cross Section of Tank

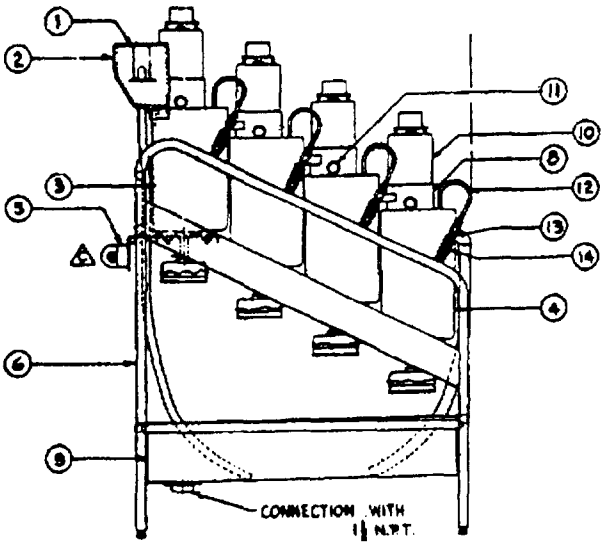

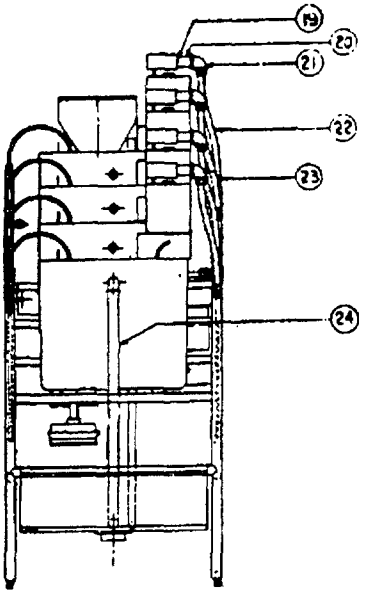

LEGEND

1 Anti-Splash Cover
2 Constant Level Tank
3 Tank Assembly
4 Tank Assembly (Front)
5 Switch
6 Frame
8 Reduction Unit
9 Drip Pan
10 Motor
11 Stopper Rod
12 Seal Hose Assembly
13 Nipple
14 Swivel Coupling
15 Midfeather
16 Baffle
17 Agitator
18 Screen Plate Assembly
19 Nipple
20 Coupling
21 Angle Connector
22 Flex Conduit
23 Straight Connector
24 Tubing

Fig.2—Model 203-CA McNETT Classifier

ST0720454

Vacuum Cup (Option)

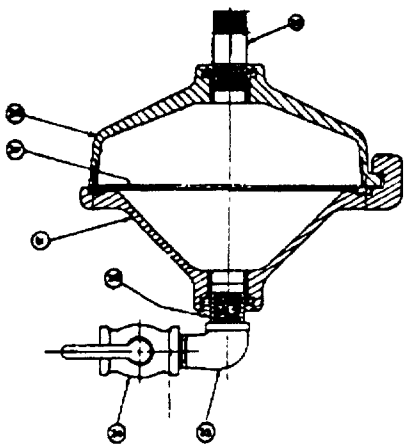

Sample Cup (Standard)

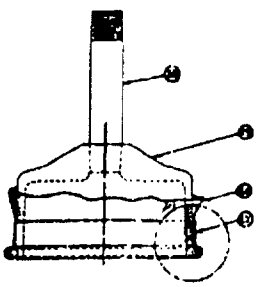

Liquid Level Alarm

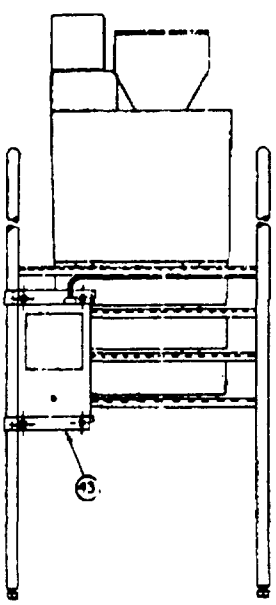

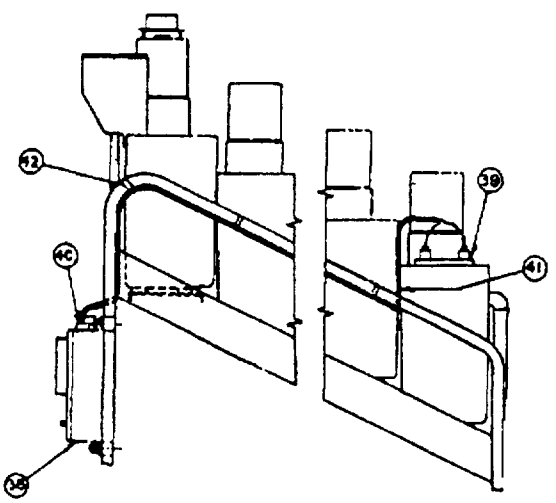

LEGEND

25 Sample Cup	
26 Muslin Cloth	38 Alarm Control Assem.
27 Rubber Band	39 Electrode Assembly
28 Nipple	40 Connector
29 Vacuum Cup Top	41 Wire
30 Screen	42 Cable Tie
31 Vacuum Cup Bottom	43 Bracket
32 Nipple	46 Timer
33 Elbow	47 Utility Box
34 Valve	48 Solenoid Valve

Fig.3— Components of Model 203-CA McNett Classifier

ST0720455

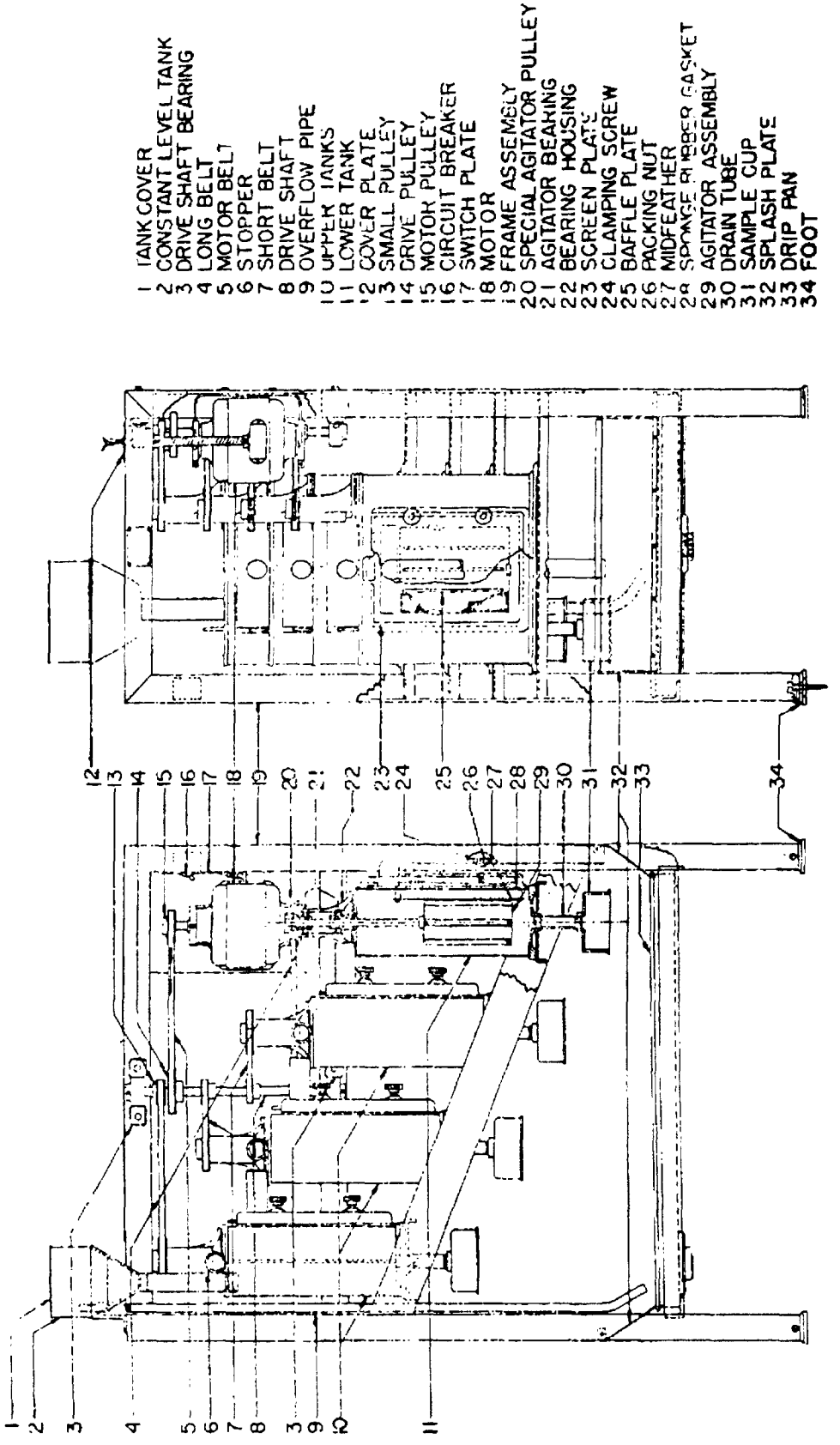

Fig.4—Model 203-A McNett Classifier

ST0720456

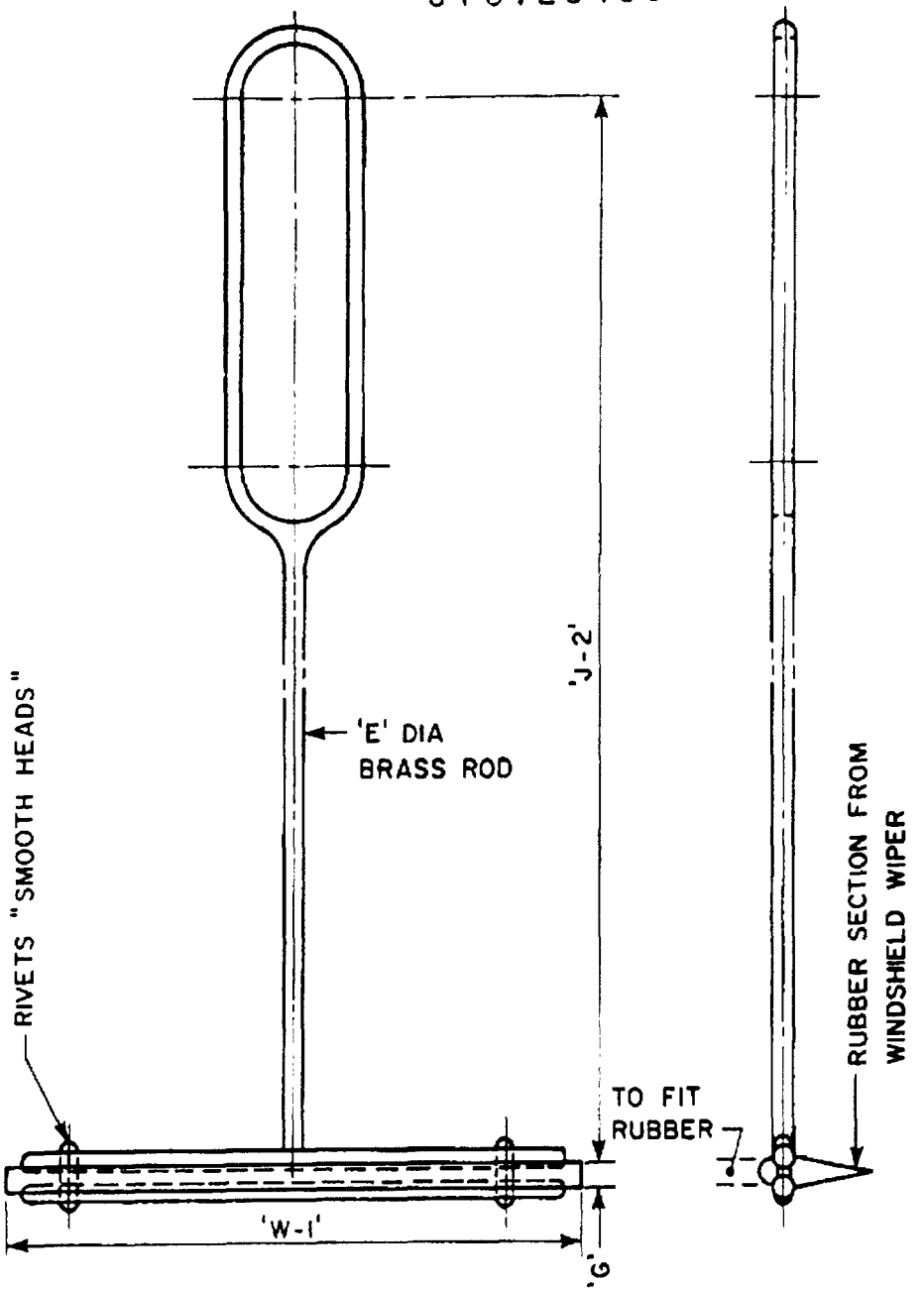

LEGEND

Symbol	mm	Inch
E	3	1/8
G	5	3/16
W-1	100	4
J-2	460	18

Fig. 5— Soft Rubber Scraper

C-1/16

ST0720457

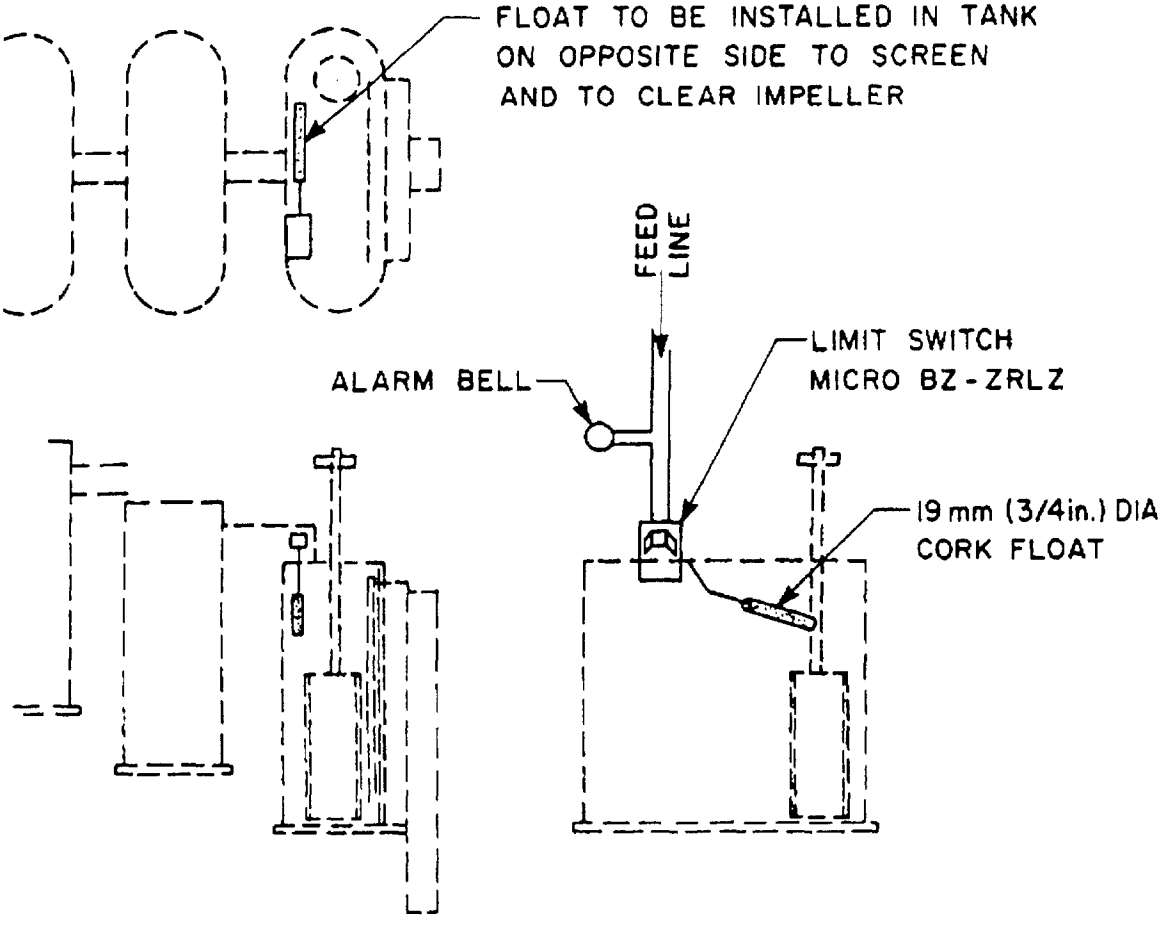

Fig. A1 - Overflow Alarm

C-1/17

ST0720458

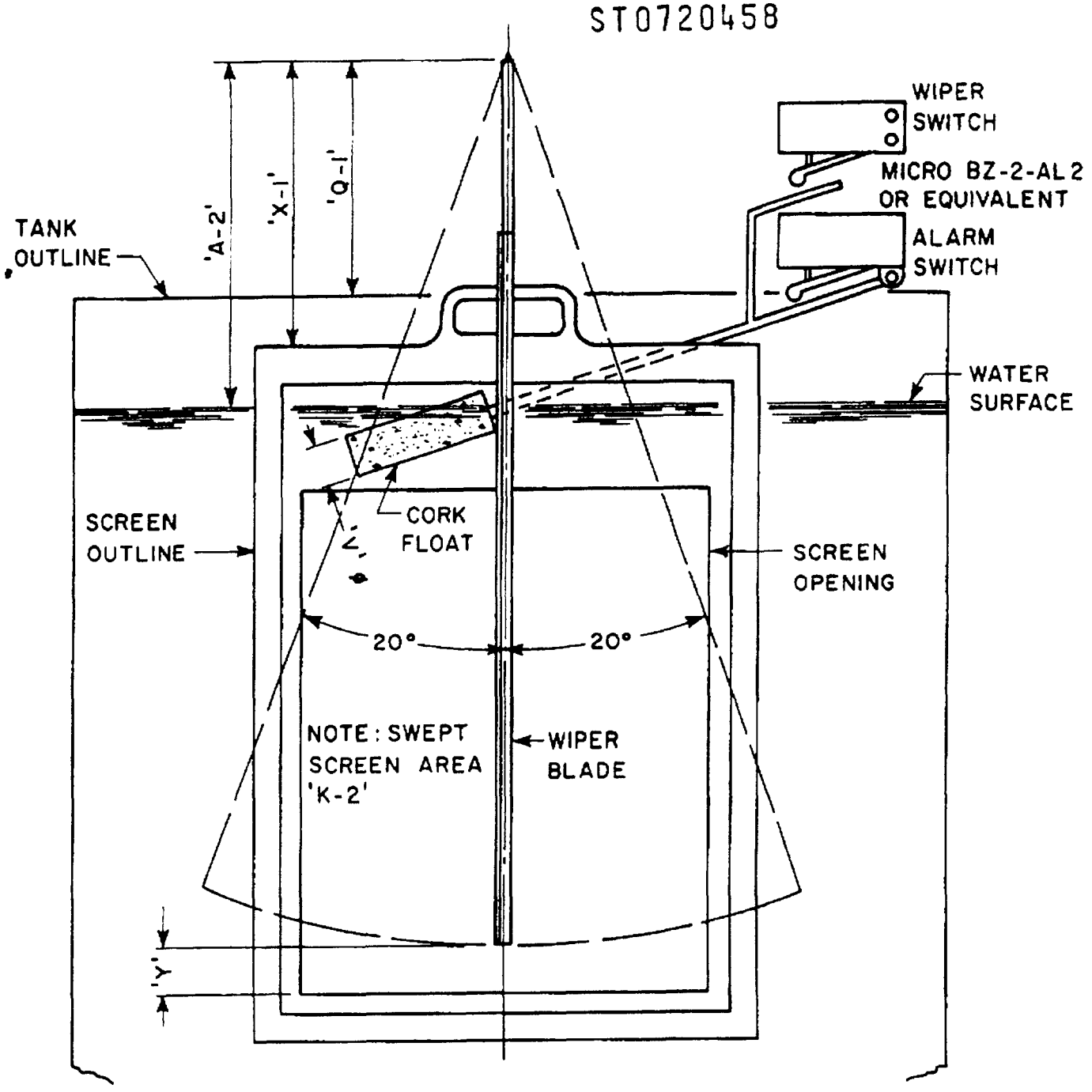

LEGEND

SYMBOL	mm	INCH
V	19	3/4
Y	25	1
Q-1	72	2-13/16
X-1	115	4-1/2
A-2	140	5-1/2
K-2	232 cm^2	36 $in.^2$

Fig. A2— Positioning of Clearing Device

ST0720459

PART -1- SUITABLE FOR MODEL 203-A . MUST BE MODIFIED FOR 203-C

PART -2- GEAR MOTOR 1/20 H.P., 115 V. A.C., 1.6 AMP., 1725 R.P.M.

PART -3- GEAR MOTOR REDUCER 87.5 R.P.M.

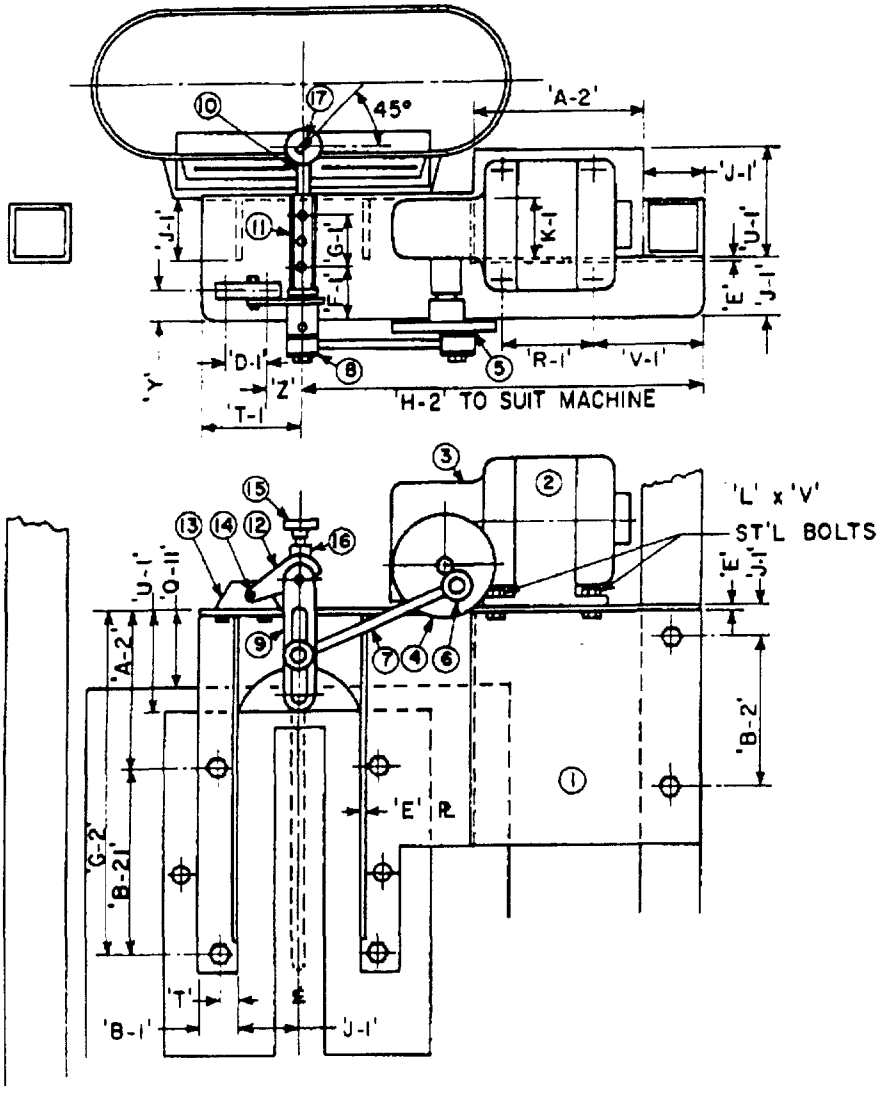

LEGEND

SYMBOL	mm	INCH	SYMBOL	mm	INCH
E	3	1/8	K-1	55	2-1/8
L	8	5/16	Q-11	75	2-15/16
T	16	5/8	R-1	78	3
V	19	3/4	T-1	82	3-1/4
Y	25	1	U-1	90	3-1/2
Z	28	1-1/16	V-1	95	3-3/4
B-1	32	1-1/4	A-2	140	5-1/2
D-1	34	1-3/8	B-2	155	6
F-1	42	1-5/8	B-21	170	6-5/8
G-1	48	1-7/8	G-2	310	12-1/8
J-1	50	2	H-2	340	13-1/2

Fig. A3— Clearing Device Assembly C-1/19

ST0720460

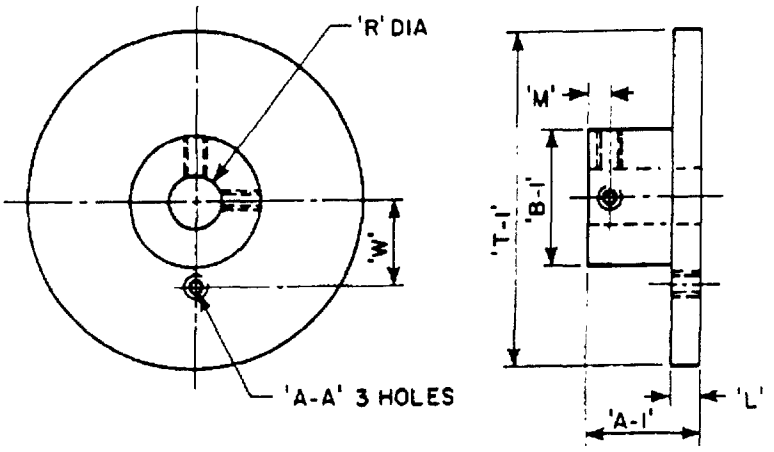

PART -4-

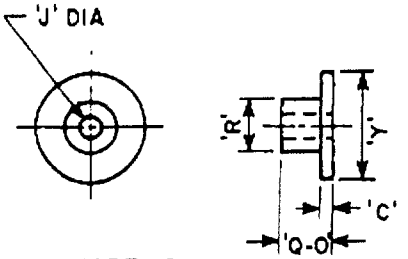

PART -6-

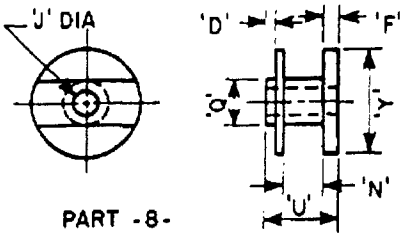

PART -8-

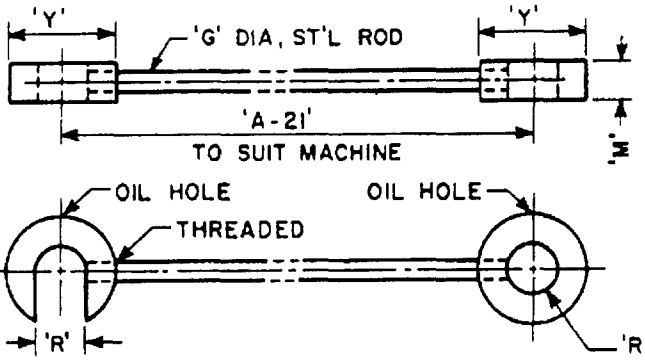

PART -7-

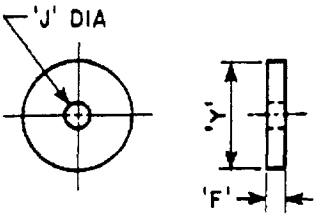

PART -5-

LEGEND

SYMBOL	mm	INCH	SYMBOL	mm	INCH
C	2.5	3/32	R	13	1/2
D	2.8	7/64	U	17	11/16
F	4	5/32	Y	25	1
G	5	3/16	A-1	29	1-1/8
L	8	5/16	B-1	32	1-1/4
M	10	3/8	T-1	82	3-1/4
N	10	25/64	A-21	150	5-7/8
Q	11	7/16			
Q-O	12	31/64	A-A	M6	¼-20NC

Fig.A4 — Clearing Device Details (Parts 4 to 8)

3-1/20

ST0720461

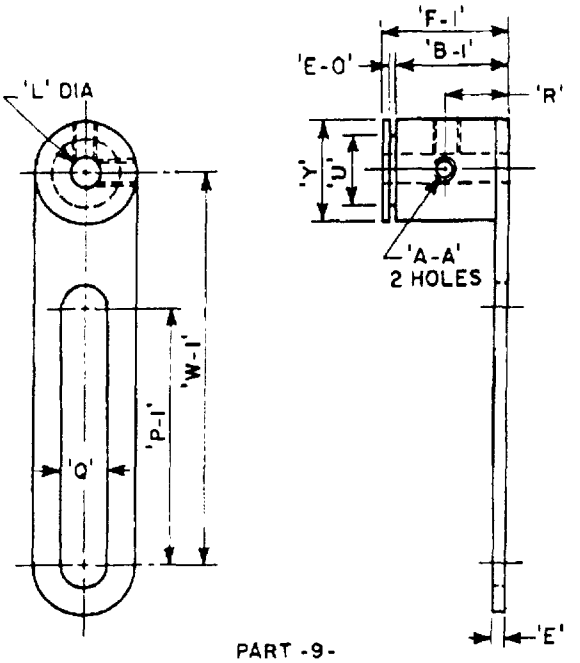

PART -9-

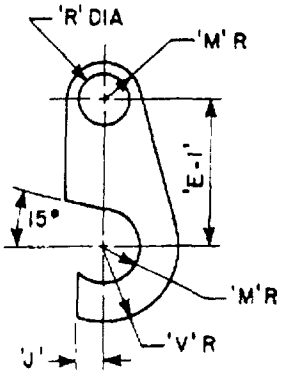

PART -12-
'E' THICK

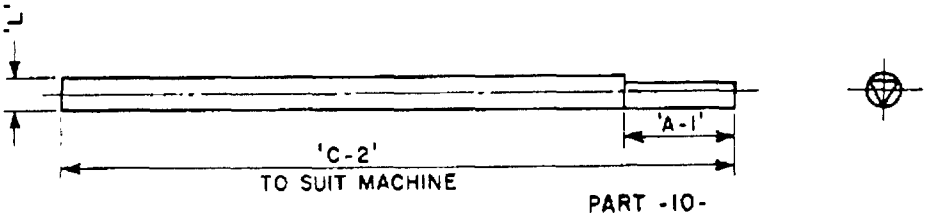

PART -10-
ST'L ROD

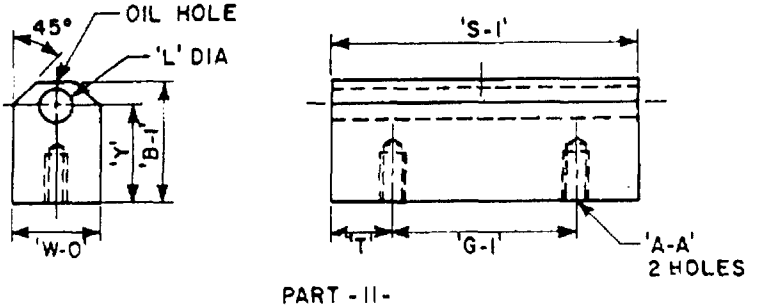

PART -11-

LEGEND

SYMBOL	MM	INCH	SYMBOL	MM	INCH
E	3	1/8	Y	25	1
E-0	3.5	9/64	A-1	29	1-1/8
J	6	1/4	B-1	32	1-1/4
L	8	5/16	E-1	38	1-1/2
M	10	3/8	F-1	42	1-5/8
Q	11	7/16	G-1	48	1-7/8
R	13	1/2	P-1	68	2-5/8
T	16	5/8	S-1	80	3-1/8
U	17	11/16	W-1	100	4
V	19	3/4	C-2	175	6-7/8
W-0	22	7/8	A-A	M6	1/4-20NC

Fig.A5— Clearing Device Details (Parts 9,11 and 12)

C-1/21

ST0720462

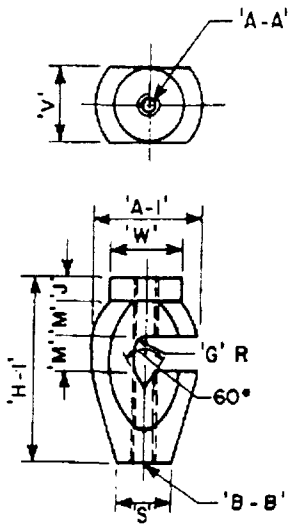

PART -16-

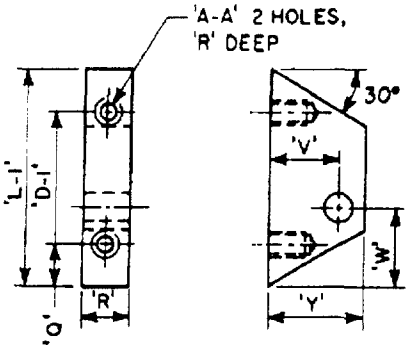

PART -13-

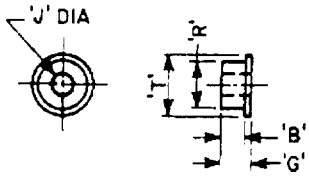

PART -14-

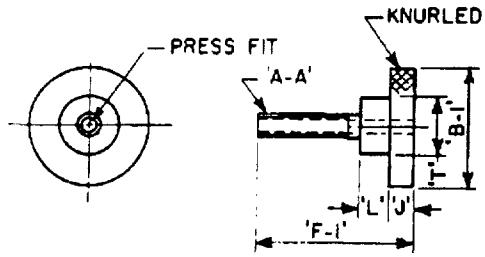

PART -15-

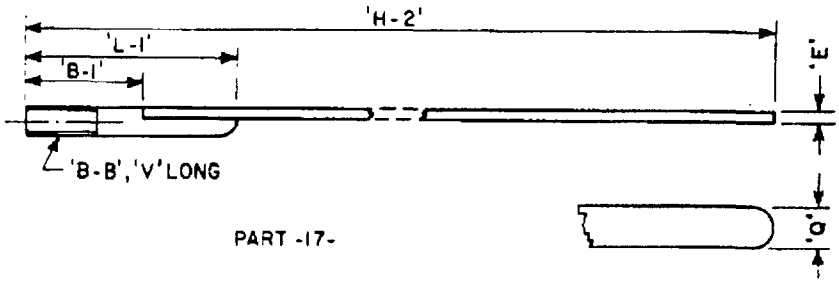

PART -17-

LEGEND

SYMBOL	MM	INCH	SYMBOL	MM	INCH
B	1.6	1/16	W	21	13/16
E	3	1/8	Y	25	1
G	5	3/16	A-1	29	1-1/8
J	6	1/4	B-1	32	1-1/4
L	8	5/16	D-1	34	1-3/8
M	10	3/8	F-1	42	1-5/8
Q	11	7/16	H-1	49	1-15/16
R	13	1/2	L-1	58	2-1/4
S	14	9/16	H-2	340	13-1/2
T	16	5/8	A-A	M6	1/4-20NC
V	19	3/4	B-B	M8	5 16-18NC

Fig. A6— Clearing Device Details (Parts 13 to 17)

C-1/22

2

Chrysotile Asbestos Test Manual

Third Edition

ST0720463

C-2

LENGTH DISTRIBUTION AND FINES CONTENT OF ASBESTOS FIBRES OF 4A GRADE AND LONGER BY WET SCREENING, USING THE CLARK CLASSIFIER

No longer published
Obtainable from the Asbestos Textile Institute Box 471, Willow Grove, Pa. 19090, USA



0463.A

Chrysotile Asbestos Test Manual

Third edition

SI0720464

C-3

LENGTH DISTRIBUTION AND FINES CONTENT OF ASBESTOS FIBRES SHORTER THAN 4A GRADE BY WET SCREENING, USING THE CLARK CLASSIFIER

No longer published
Obtainable from the Asbestos Textile Institute Box 471, Willow Grove, Pa. 19090, USA

Printed in USA



Chrysotile Asbestos Test Manual

Third edition

ST0720465

C-4-72

WASH TEST

Supersedes Method C-4 of the 1966 second edition

Revised and adopted by:

Asbestos Textile Institute - ...

Quebec Asbestos Mining Association - 29 May 1972

Printed in USA

ST0720466

WASH TEST[1]

Designation C-4-72

1. Scope

1.1 This procedure covers the determination of the fines content of asbestos fibres by washing with water on a specified screen.

2. Summary of Method

2.1 Specimens are washed on a sieve by means of a standard water nozzle.

2.2 The material retained on the screen is dried and weighed, and the percent loss in weight is calculated and reported.

3. Significance

3.1 The Wash Test gives a rapid and simple evaluation of the fines content.

3.2 The equipment required and the technique followed are simple and undemanding.

3.3 The fines content obtained by this method approximates the equivalent screen classification obtained by Methods C-1[2], and C-5[2].

4. Definitions of Terms

4.1 Refer to Definitions A-2[2].

5. Apparatus

5.1 Standard 74 µm (U.S. No. 200) full height 20-cm (8-in.) diameter testing sieve with a standard 1.68 mm (U.S. No. 12) backing wire cloth[3], as described in ASTM Specifications E 11 for Sieves for Testing Purposes[4].

5.2 For testing floats, only, a Standard 44µm(U.S. No. 325) full height 20-cm (8-in.) diameter testing sieve with a Standard 1.68 mm (U.S. No. 12) backing wire cloth[3], as described in ASTM Specifications E 11[4], is required.

Note 1 - In order to prevent the accumulation of water underneath the sieves while washing, several drainage notches may be cut in the sieve frame below the screen cloth, as shown in Fig. 1.

5.3 Standard 20-cm (8-in.) diameter full height sieve frame only for use as a splash guard, as shown in Fig. 1.

5.4 Spray nozzle as described in Fig. 2. (Also described in ASTM Method C 430 for Fineness of Hydraulic Cement by the 44µm Sieve[5]).

5.5 Water supply system consisting of the following elements, connected in series (Note 2):

5.5.1 Supply of clean water at constant pressure. A water pressure regulator may be required at some locations.

5.5.2 Needle valve for regulating the water flow rate.

5.5.3 Pressure gauge capable of tolerating the maximum supply pressure and which may be read to within ± 7 k Pa (1 psig). Mount the gauge in the run of a tee pipe fitting.

5.5.4 Wall-mounted swivel hose support as described in Fig. 1.

5.5.5 Pressure hose with a 6 to 13 mm (0.25 to 0.5 in.) bore just long enough to suspend the nozzle from the swivel to a level 127 ± 7 mm (5 ± 0.25 in.) above the screen surface of the sieve.

5.6 Ashless filter paper, thin, rapid filtering, hardened to provide adequate wet strength and resistance to wetting.

5.7 Drying apparatus such as an oven or an infrared dryer.

6. Sampling

6.1 Take a sample in accordance with Method A-1[2].

6.2 Twenty grams is required for duplicate specimens.

6.3 Weigh out two specimens of 10 ± 0.05 g each.

7. Calibration

7.1 By means of the needle valve, regulate the water flow

rate so that a pressure of 138 ± 7 k Pa (20 ± 1 psig) will register on the gauge.

7.2 Determine the time required for $2dm^3$ (2 liters) to flow through the nozzle by collecting the discharge in a graduated cylinder.

7.3 The time required must be between 23 and 26 s. If the time is shorter, check the nozzle openings for precision of bore. If the time is longer, check nozzle openings for blockage, or for the presence of burrs on new nozzles. If nozzle openings are satisfactory, verify the precision of the pressure gauge.

8. Procedure

8.1 For Q.S.[6] Group 3 to 7 fibres, select a 74µm (U.S. No. 200). For floats use a 44µm (U.S. No. 325).

8.2 Fit the sieve with a splash guard and spread the test specimen on the screen surface.

8.3 Wet the specimen thoroughly with a gentle spray at approximately 14 k Pa (2 psig). A few seconds is sufficient time for this operation. Do not exceed 15 s to avoid loss of fines at this stage.

8.4 Adjust the pressure at 138 ± 7 k Pa (20 ± 1 psig).

8.5 Start a timer and begin the washing cycle.

8.6 Washing cycle.

8.6.1 Keep the nozzle 127 ± 7 mm (5 ± 0.25 in.) above the screen surface by means of the support and move the spray in a circular motion alternately in the clockwise and counterclockwise directions so that all the fibre is thoroughly and uniformly washed.

8.6.2 In order to ensure a thorough washing occasionally change the position of the specimen on the screen by directing the spray obliquely onto the fibre. This motion could possibly be described as a chasing action and is critical in the performance of the test.

Note 2 - A motorized device which imparts a planetary circular motion to the nozzle may be used provided this yields equivalent results.

Note 3 - Blinding of the screen is indicated by an accumulation of water on the sieve. This condition materially reduces the effectiveness of the spray and should be corrected by tilting the

sieve and directing the nozzle on the blinded areas to dislodge the small particles from the mesh.

8.6.3 After washing for 120s (2 min), transfer the fibre to a Büchner funnel and filter it on a previously dried and weighed filter paper.

8.7 Dry the residue to constant weight.

8.8 Invert the sieve and clean it with the spray by back washing.

8.9 Wash the second specimen as described above.

8.10 If the dry weights of the retained fractions from both specimens differ by 0.2 g or less, accept the results. Otherwise, wash additional specimens until results on two of the specimens are acceptable.

9. Calculation

9.1 Calculate the fines content by subtracting the dry weight of the retained fraction from the specimen weight and express this as a percent of the specimen weight.

10. Report

10.1 Report the fines content as the average of two acceptable results.

10.2 Fully identify the sample as to designation and origin.

11. Precision

11.1 The single-apparatus multi-operator precision is ± 1.0 percent (two sigma limits) as defined in ASTM Recommended Practice L 177[4], over the range of 12.6 to 98.6 percent fines content.

ST0720470

FOOTNOTES

1. Supersedes designation C-4 in the 1966 second edition. Dates of adoption or latest revision: Asbestos Textile Institute latest editorial revision, 28 Feb 1974; Quebec Asbestos Mining Association, adopted 29 May 1972, latest editorial revision 14 Mar 1974.

2. Appears in Chrysotile Asbestos Test Manual, third edition, available from Quebec Asbestos Mining Association, 580 Grande Allée East, Suite 320, Quebec, P.Q., Canada, G1R 2K2.

3. Sieves supplied by W.S. Tyler Company, Ltd., fitted with stainless steel wire cloth, have been found satisfactory.

4. Annual Book of ASTM Standards, Part 41.

5. Annual Book of ASTM Standards, Part 13.

6. Quebec Standard (Q.S.) designation of chrysotile asbestos fiber grades.

ST0720471

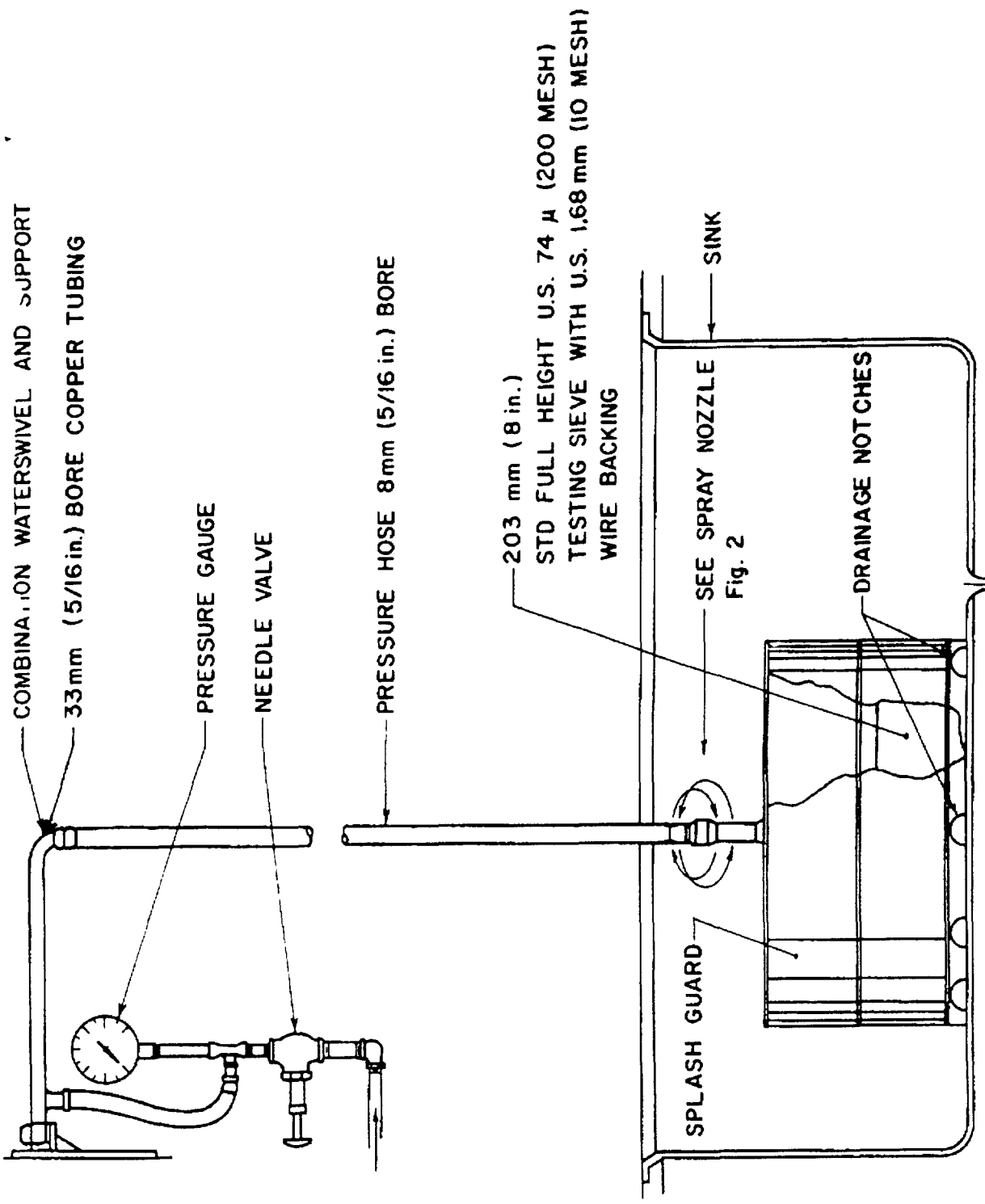

Fig. 1— Wash Test Apparatus

C-4/7

ST0720472

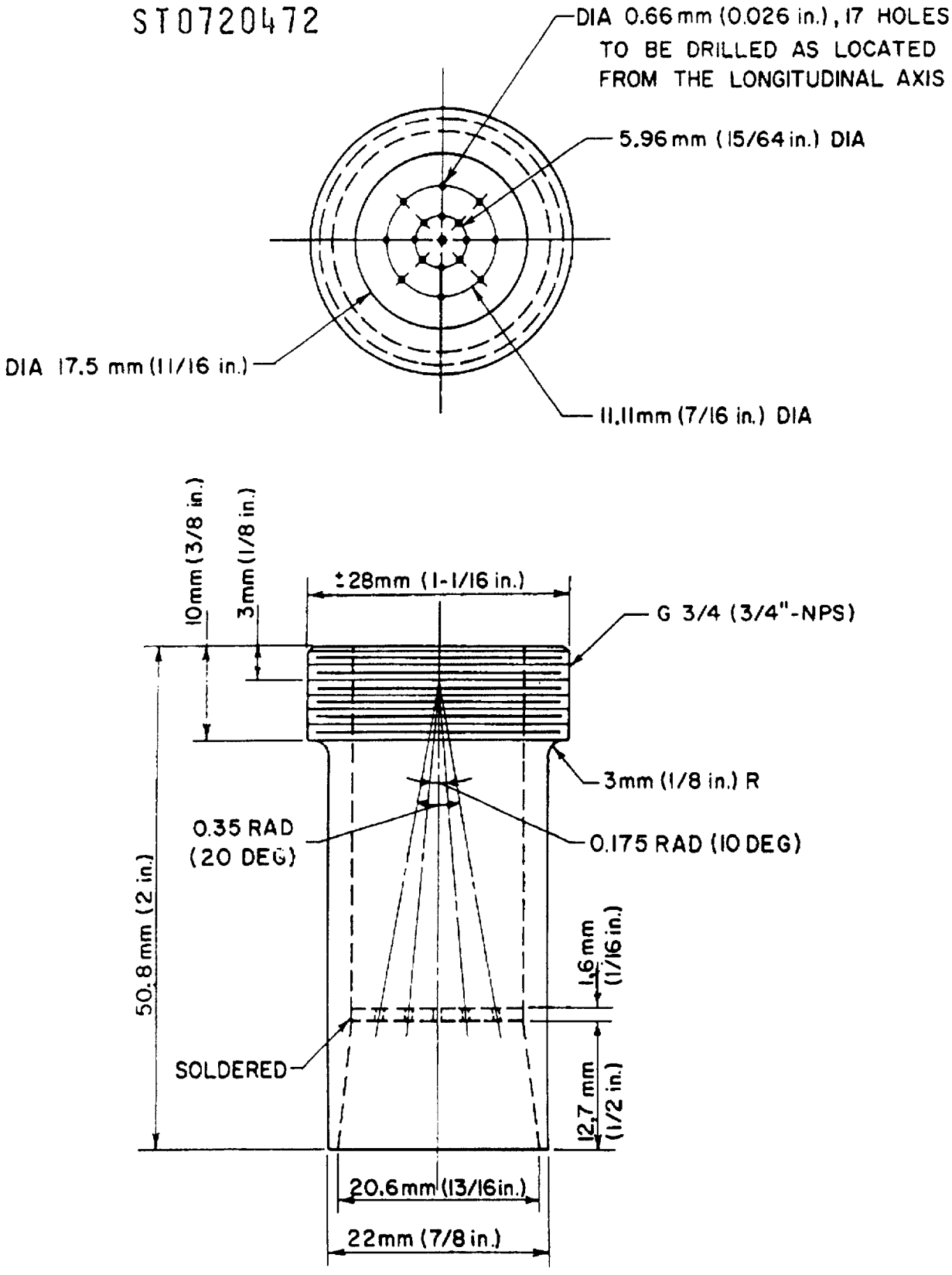

Fig.2 — Spray Nozzle Detail

C-4/8

5.C

0472.A

Chrysotile Asbestos Test Manual

Third edition

ST0720473

C-5-72

T & N WET CLASSIFICATION

First publication

Revised and adopted by:

Asbestos Textile Institute - ...

Quebec Asbestos Mining Association - 6 Oct 1972

Printed in USA

ST0720474

Method for

T & N WET CLASSIFICATION[1]

Designation C-5-72

1. Scope

1.1 This method of test covers the operation of the Turner and Newall (T and N)[2] wet sieving classification apparatus, and a procedure for the determination of fiber length distribution and fines[3] content (minus 200 mesh)[4] of milled asbestos fibre.

1.2 For purposes of estimating length distribution, the test is limited to samples free from excessive quantities of non fibrous particles or contaminants.

1.3 For comparisons between different fibre grades, only those specimens which have approximately the same degree of fiberization[5] will give completely meaningful results.

1.4 This method of test is not applicable to ultrafine grades of asbestos powders which contain little or no fibers retained on a 200 mesh sieve. This method is restricted to Q.S.[6] grades 4A to 7D inclusive.

Note 1 - This is an alternative procedure to Method C-1[7].

2. Summary of Method

2.1 A weighed specimen of asbestos fibre is dispersed in water and the dispersion is allowed to flow by gravity through a series of superposed screens which rotate in a horizontal plane. The suspension flows through successively finer screens which retain the oversize fibers. The rotation of the screens distributes the incoming fibre suspension throughout the vessel, and the swirling motion created by the incoming jet of water maintains the fibres in suspension and ensures that they all encounter the screen apertures.

2.2 At the end of the test period, the screens bearing the classified fiber fractions, are removed from the vessels, dried and weighed. The minus 200 mesh fines content is estimated by difference.

ST0720475

3. Significance

3.1 This procedure provides a simple method for obtaining information on the fiber length distribution of suitable asbestos fiber. The use of relatively low cost apparatus, small test specimens, and a short test period, enhance the usefulness of this method.

3.2 Normally, results obtained by this procedure are reproducible under comparable laboratory conditions. However, close agreement cannot be expected unless all deviations from the procedure, however minor, are avoided. Moreover, results for longer fiber grades are influenced to a greater extent by differences in fiber length distribution, and characteristics, than are those for shorter grades.

3.3 This test is suitable for specification acceptance and manufacturing control.

3.4 It is assumed that all undersize fibers, and only those, will pass through any given sieve aperture. However, this idealized condition is not normally achieved and can only be approached more or less closely. Thus, results should not be misconstrued as true length distribution data.

4. Definitions

4.1 Refer to Definition A-2[7]

5. Apparatus

5.1 T and N wet sieving classifier[2], consisting of four 127 mm (5 in.) diameter rotating circular vessels, the bottom of which are fitted with 98 mm (3.86 in.) diameter screens, stacked vertically and concentrically in order of diminishing screen apertures. The apparatus is fitted with stirrers to prevent screen blinding, and with spouts for conducting the drainage from each vessel to the following vessel. The lowest vessel discharges onto a 200 mesh sieve 203.2 mm (8 in.) in diameter, in the base of the apparatus as shown in Fig. 1.

5.2 The following range of sieve discs; fitted with screen cloth equivalent to U.S. No. 8, 16, 30, 50 and 200, is required. For reference, British Standard, Tyler, and U.S.A. Standard equivalent sieves are listed in Table 1.

5.3 One 200 mesh test sieve, 203.2 mm (8 in.) diameter, as described in ASTM Specifications E 11 for Sieves for Testing Purposes[9], or equivalent Tyler, or British Standard, for country of use.

ST0720476

5.4 One 230 (or finer) mesh sieve disc for drying 200 mesh fractions.

5.5 Fraction collector supplied with the apparatus, or optional suction arrangement, such as a Büchner funnel.

5.6 Drying oven (convection type, or mechanical draft) or infrared drying device.

5.7 Water Supply - Provide a suitable pressure regulator and filter, if required, to ensure a constant flow of clean water to the classifier.

6. Sampling

6.1 Select samples in accordance with method A-1[7].

7. Test Specimen

7.1 From the bulk laboratory sample, draw two specimens weighing approximately 15g (0.5 oz.). Reduce each specimen by coning and quartering to 2 ± 0.005g (0.0643 ± 0.00016 11 oz.) (Footnote 8).

8. Procedure

8.1 Disperse a test specimen in 400 cm^3 of water in a 500 cm^3 beaker and allow it to soak four minutes. After this period, stir intermittently by hand for a further period of one minute. Stir gently and diametrically across the beaker to disperse the asbestos without excessive fiberizing action.

8.2 While the test specimen is soaking, thoroughly wet all the discs of the sieve series and fit to the classifier. Thoroughly wet the screen cloth of a clean 200 mesh, 203.2 mm (8 in.) diameter standard test sieve and place it in the recess in the top of the classifier base, and center the small plastic disc supplied with the apparatus atop the screen surface beneath the fourth vessel outlet.

Note 2 - Verify the tare weight of each sieve disc daily.

8.3 Open the water control valve, start the drive motor, adjusting the flow of water through the classifier to 0.0808 dm^3/s (1.28 U.S. gal/min) or the 64 graduation on the flowmeter tube when reading the top of the float, and ensure that there are no leaks caused by inadequate clamping of the sieve discs. Rectify any such leaks by unclamping the plastic vessel, readjusting the sieve disc, and reclamping the plastic vessel. Ensure that the

side of the water jet impinges on the top screen about 3 mm from the inner edge of the lower bevelled part of the plastic vessel. Adjust the water spout if necessary.

Note 3 - Check the operating water level in the top three vessels daily. The level should be to the top surface of the clamping lugs within ± 3.2 mm (0.125 in.). If the water level is high or low in any vessel, adjust the copper outlet tube of that vessel to obtain the desired level. Only very slight adjustments are necessary.

8.4 Slowly pour the water dispersion containing the test specimen from the beaker into the first (top) vessel, ensuring that overflowing does not occur. Accomplish this operation within 20 to 25s. Start the timing period at this point. Wash out any residue from the beaker with a small volume of clean water into the first vessel.

Note 4 - A plastic wash bottle is useful for this purpose.

8.5 During the test, manually rotate the 200 mesh screen slightly at 30s intervals, recentering the plastic disc on each occasion, for improved operation and to prevent blinding. If the water level in either of the two lowest rotating sieve units rises continuously, as may happen with short or talcy grades, lower the stirrer on the appropriate sieve by pressing down on the control knob on the left-hand side of the classifier body. Clear immediately any fiber which lodges in the orifices of any of the sieving units, by means of a wire hook. A clue to this malfunction is given if the water level in any of the units rises unduly.

8.6 At the end of the 300s (5 min.) test period, stop the flow of water and when each unit has drained, wash down any fiber remaining on the walls of the vessel, using a plastic wash-bottle and directing the water jet in a direction opposite to the motion of the vessel. Then, stop the motor.

8.7 Unclamp the plastic vessels and remove each sieve disc in turn from its sieving unit, after ensuring that any fiber remaining in the conical depression in the sieve holder above has been washed down.

8.8 Carefully wash the fiber retained by the 203.2 mm (8 in.) diameter 200 mesh sieve onto a 230 mesh sieve disc held in the fraction collector (or Büchner funnel) and apply a vacuum to speed the filtration. A venturi type water-jet suction pump may be used for this purpose. Connect the suction tube to the outlet of the fraction collector.

8.9 Dry the fiber fractions retained on their respective sieve discs to constant weight at 105' to 110 °C (220 to 230 °F) by means of the drying apparatus.

8.10 After drying, cool the sieve discs and their fiber

fractions for a minimum period of 0.9 ks (15 min.) in a partly-closed container and then weigh immediately. Subtract the tare weight of each sieve disc, previously determined, from the gross weight of the corresponding fiber fraction and sieve disc.

9. Calculation

9.1 A typical classification of a 4-Group fiber[6], with calculation, is given hereunder by way of example:

Screen (ASTM Series)	8	16	30	50	200	-200
Weight retained g	0.080	0.460	0.500	0.180	0.270	...
Fraction weight %	4.0	23.0	25.0	9.0	13.5	25.5
Cumulative weight %	4.0	27.0	52.0	61.0	74.5	100.0

Minus 200 mesh = 2.0 - (0.080 + 0.460 + 0.500 + 0.180 + 0.270) = 0.510 g

10. Report

10.1 Fully identify the sample stating the origin and the grade designation.

10.2 Report the average values of two acceptable tests and state the series of screens used.

10.3 If cumulative values have been calculated, report those also.

11. Precision and Accuracy

11.1 If the corresponding individual percentages obtained for each screen fraction of the duplicate specimens differ by more than three units of percentage, test a third specimen. Average the results of two acceptable tests.

11.2 To obtain the desired accuracy observe the precautions in Annex A1.

ST0720479

TABLE 1 Sieve Equivalents

Standard Designations		Alternative Designations		Aperture Sizes[b]	
U.S.A.[a] & British	Tyler Mesh per in.	U.S.A. No.	British Mesh (approx) per in.	mm	inch (approx)
2.36 mm	8	8	7	2.36	0.0929
1.18 mm	14	16	14	1.18	0.0465
600 µm	28	30	25	0.60	0.0236
300 µm	48	50	52	0.30	0.0118
75 µm	200	200	200	0.075	0.00295
63 µm	250	230	240	0.063	0.00248

(a) Identical with ASTM Standard sieves and ISO Standard apertures.

(b) Apertures are now identical for the three series.

ST0720480

ANNEXES

A1. PRECAUTIONS TO PROMOTE ACCURACY

A1.1 To obtain required precision and accuracy, the following general precautions should be observed:

A1.2 Take care to ensure that all the retained material has been washed from the walls of the vessels onto the corresponding screens and, having removed a given screen, wash any material in the cone beneath it into the vessel below.

A1.3 A water temperature of 21 ± 10 ^{o}C (70 ± 20 ^{o}F) is recommended.

A1.4 New screens should be run-in by making at least ten dummy tests, and preferably more, before they are put into regular use.

A1.5 Stirrer clearance and strokes must be maintained within the limits specified in Annex A2 at all times.

A1.6 Screens should be checked regularly (at least daily) for holes, slack or distorted cloth, and other damage. Similarly the effectiveness of the seal between individual screen discs and the rubber gaskets in their respective vessels should be checked at the beginning of each run. This is a routine precaution which is necessary in any case to ensure that leakage of water does not occur.

A2. STIRRER ADJUSTMENTS

A2.1 Measurement of stirrer stroke.

A2.1.1 Stirrer stroke may be measured by attaching a pencil to the side of the stirrer and measuring the chordal length of the arc swept on a piece of card held horizontally under it. Care must be taken to mount the pencil in such a position that its point describes an arc having the same radius as that swept by the tip of the stirrer.

A2.2 Adjustment of stirrer stroke.

A2.2.1 Stirrer stroke should be 60.3 to 63.5 mm (2.375 to 2.50 in.). If it is outside this range, adjust it as follows:

A2.2.2 Loosen the hexagonal nut of the driven crank mounted on the vertical stirrer shaft. Rotate the eccentric crank pin so that the pin moves inwards if the stroke was too small, or outwards if the stroke was too large. Tighten the locking nut and recheck the stroke. Repeat the procedure until the correct stroke is obtained.

A2.2.3 The arc swept by each of the four stirrers should stop 3 mm (0.125 in.) from the inner edge of the lower bevelled part of the plastic vessel.

A2.3 Stirrer clearance.

A2.3.1 The clearance between the tip of each stirrer and the screen over which it is mounted must be 1.5 to 2.4 mm (0.0625 to 0.09375 in.). If the clearance falls outside these limits, adjust it as follows:

A2.3.2 For the two upper stirrers, adjust the clearance by means of the small screw which is located on the stirrer support fork upon which the horizontal part of the stirrer arm rests.

A2.3.3 For the two lower stirrers, the adjustment should be made by loosening the socket screw which secures the stirrer fork to the stirrer drive shaft, and adjusting the height of the stirrer fork as necessary. Lowering the stirrer fork raises the stirrer tip and vice versa. The adjustment is made easier if feeler gauges are inserted between the underside of the stirrer fork and the upper surface of the cam follower. The horizontal angular position of the stirrer fork must be maintained during these adjustments, to ensure that the stirrer tip does not strike the side of the plastic vessel at the extremity of its stroke. Refer to limits imposed in A2.2.3.

ST0720482

FOOTNOTES

1. First publication. Dates of adoption or latest revision: Asbestos Textile Institute, latest editorial revisions 28 Feb 1974; Quebec Asbestos Mining Association, adopted 6 Oct 1972, latest editorial revision, 14 Mar 1974.

2. T and N are the abbreviations for Turner and Newall Limited Fibre Laboratory, Trafford Park, Manchester, England M17 1RU, who developed this method of testing and who supply the equipment as a service to the Asbestos Industry, on a non-profit basis.

3. As defined in Definitions A-2[7].

4. Sieve meshes mentioned in this procedure are described in ASTM Specifications E 11 for Sieves for Testing Purposes which appear in the annual Book of ASTM Standards, Part 41. Alternatively, the equivalent screen meshes mentioned in Table 1 may be used.

5. Degree of fiberization may be estimated by Method D-3[7].

6. Quebec Standard (Q.S.) designation of chrysotile asbestos fiber grades.

7. Appears in Testing Procedures for Chrysotile Asbestos Fibre, third edition, available from Quebec Asbestos Mining Association, 580 Grande Allée East, Suite 320, Quebec, P.Q., Canada, G1R 2K2.

8. The SI metric system of units shall be used for referee testing.

9. Annual Book of ASTM Standards, Part 41.

ST0720483

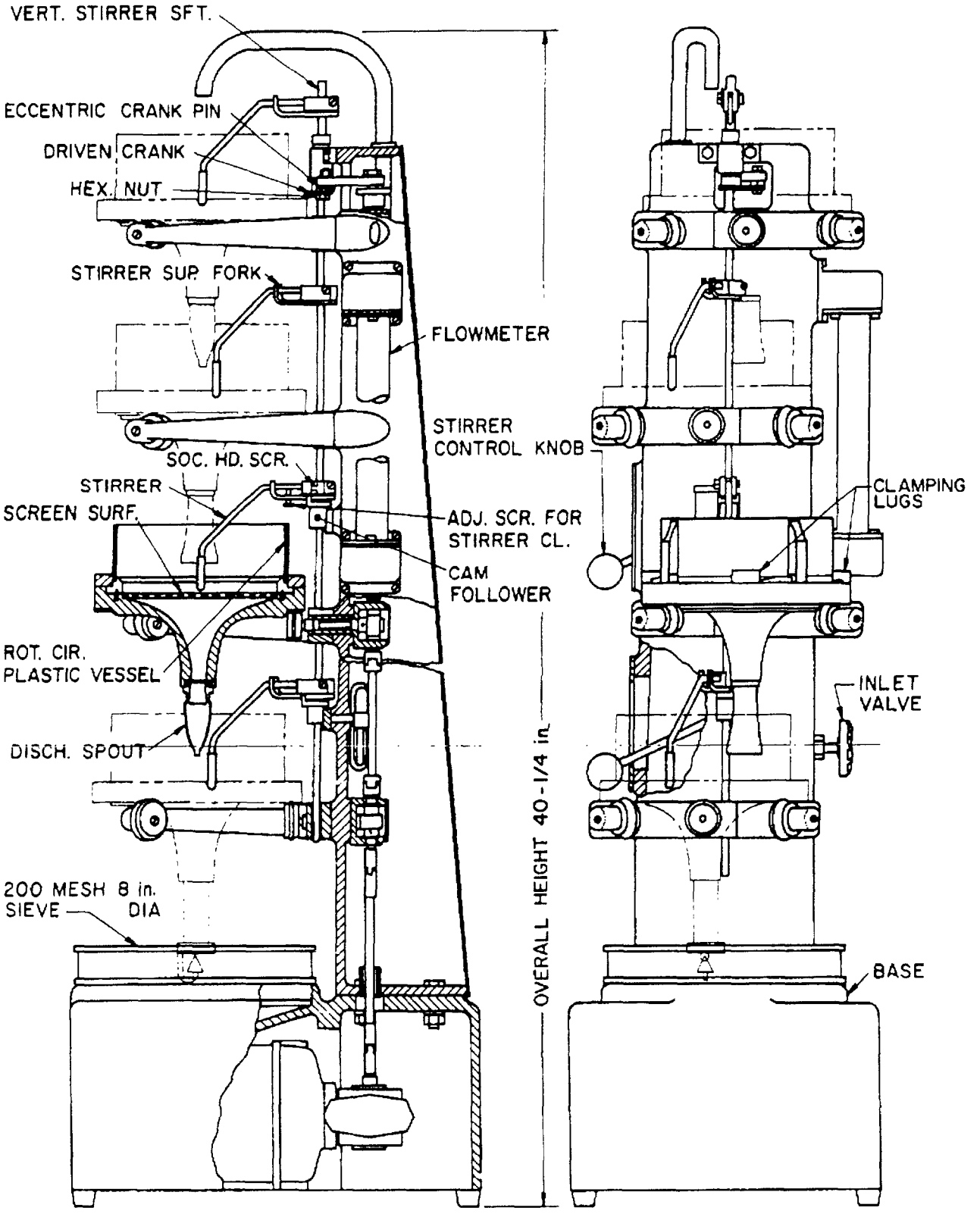

Fig.1– Turner and Newall Classifier

C-5/11

D
1

0483A

Chrysotile Asbestos Test Manual

Third edition

ST0720484

D-1-72

WET VOLUME

Supersedes Method D-1 of the 1966 second edition

Revised and adopted by:

Asbestos Textile Institute - ...

Quebec Asbestos Mining Association - 6 Oct 1972

Printed in USA

Chrysotile Asbestos Test Manual

Third edition

ST0720484

D-1-72

WET VOLUME

Supersedes Method D-1 of the 1966 second edition

Revised and adopted by:

Asbestos Textile Institute - ...

Quebec Asbestos Mining Association - 6 Oct 1972

Printed in USA

ST0720485

Method for

WET VOLUME[1]

Designation D-1-72

1. Scope

1.1 This procedure covers the appraisal of asbestos fibre Groups 4 to 7[4] in terms of their occupied volumes when immersed in water.

2. Summary of Method

2.1 A test specimen is dispersed in water by means of a mechanically driven inverter. The resulting suspension is then allowed to stand for a fixed period, and the volume occupied by the fibre, as defined by the solid-liquid interface, is recorded.

3. Significance

3.1 Wet volume gives an indication of the degree of loftiness and openness of asbestos fibre.

4. Definitions

4.1 Refer to Definitions A-2[2].

5. Apparatus

5.1 Glass graduated cylinder[3] meeting the following specifications, as shown in Fig. 1:

5.1.1	Capacity	2 dm^3 (2000 cm^3)
	Subdivisions	0.02 dm^3 (20 cm^3)
	Inside diameter	80 mm

Wall thickness	3 mm
Total height	482 ± 3 mm
Height from inner bottom of base to the 2000 cm^3 mark	398 ± 6 mm

5.1.2 The cylinder must have a full-width mouth reinforced with an exterior beaded rim, without any spout.

5.1.3 The bottom of the graduated cylinder must be flat and must form a clean right angle with the wall of the graduate.

5.2 Mechanically driven inverter for rotating the graduated cylinder about a horizontal axis at the center of the graduated cylinder at 30 rpm for 30 complete rotations. The inverter may clamp the cylinder in such a way as to seal the mouth, or separate stoppers may be used provided the latter do not project inside the cylinder. (Fig. 2 and 3).

6. Sampling

6.1 Select a sample in accordance with Method A-1[2].

7. Test Specimens

7.1 Refer to Table 1 for specimen sizes required. Take two specimens in each case.

TABLE 1 Specimen Size and Test Duration

Group[4] No.	Specimen weight g	Sedimentation time ks	h
4 to 6	30 ± 0.1	7.2	2
7	20 ± 0.1	14.4	4

8. Procedure

8.1 Fill the cylinder with distilled[5] or clean water at 25 ± 2 °C(77 ± 3 °F)to the 1000 cm^3 mark of the cylinder.

8.2 Pour the test specimen into the cylinder and add distilled or clean water to the 2000 cm^3 mark.

8.3 Clamp the cylinder on the mechanical inverter and rotate through 6.3 rad (360 deg) 30 times in one minute. Let stand for ten minutes and then repeat the rotation cycle.

8.4 Remove the cylinder and place carefully on a vibration free table.

8.5 Record the wet volume of the fibre suspended in water in cm^3 after 7.2 ks (2h) for Groups 4, 5 and 6, and after 14.4 ks (4h) for Group 7 fibers.

8.6 Results are acceptable if the difference in wet volume of the two specimens does not exceed ± 5 percent.

9. Report

9.1 Report the average of two acceptable results expressing the wet volume in units of ml.

10. Precision

10.1 The single-apparatus, multi-cylinder, multi-operator precision (repeatability) is ± 10 ml (two sigma limits) as defined in ASTM Recommended Practice E 177[6] over the wet volume range of 0.03 to 1.7 dm^3 (30 to 1700 ml).

ST0720488

FOOTNOTES

1. Supersedes designation D-1 in the 1966 second edition. Dates of adoption or latest revision: Asbestos Textile Institute, latest editorial revision 28 Feb 1974; Quebec Asbestos Mining Association, adopted 6 Oct 1972, latest editorial revision 14 Mar 1974.

2. Appears in the third edition of the Chrysotile Asbestos Test Manual, available from Quebec Asbestos Mining Association, 580 Grande Allée East, Suite 320, Quebec, P.Q., Canada, G1R 2K2.

3. Cylinders supplied by the Scientific Glass Apparatus Co. Inc., of 735 Broad Street, Bloomfield, New Jersey, USA, 07003 have been found satisfactory for this application.

4. Quebec Standard (Q.S.) designation of chrysotile asbestos grades.

5. It is recognized that clean water from different locations may affect results slightly. Therefore, when results from one laboratory are to be compared with the results of another laboratory, distilled water should be used.

6. Annual Book of ASTM Standards, Part 41.

ST0720489

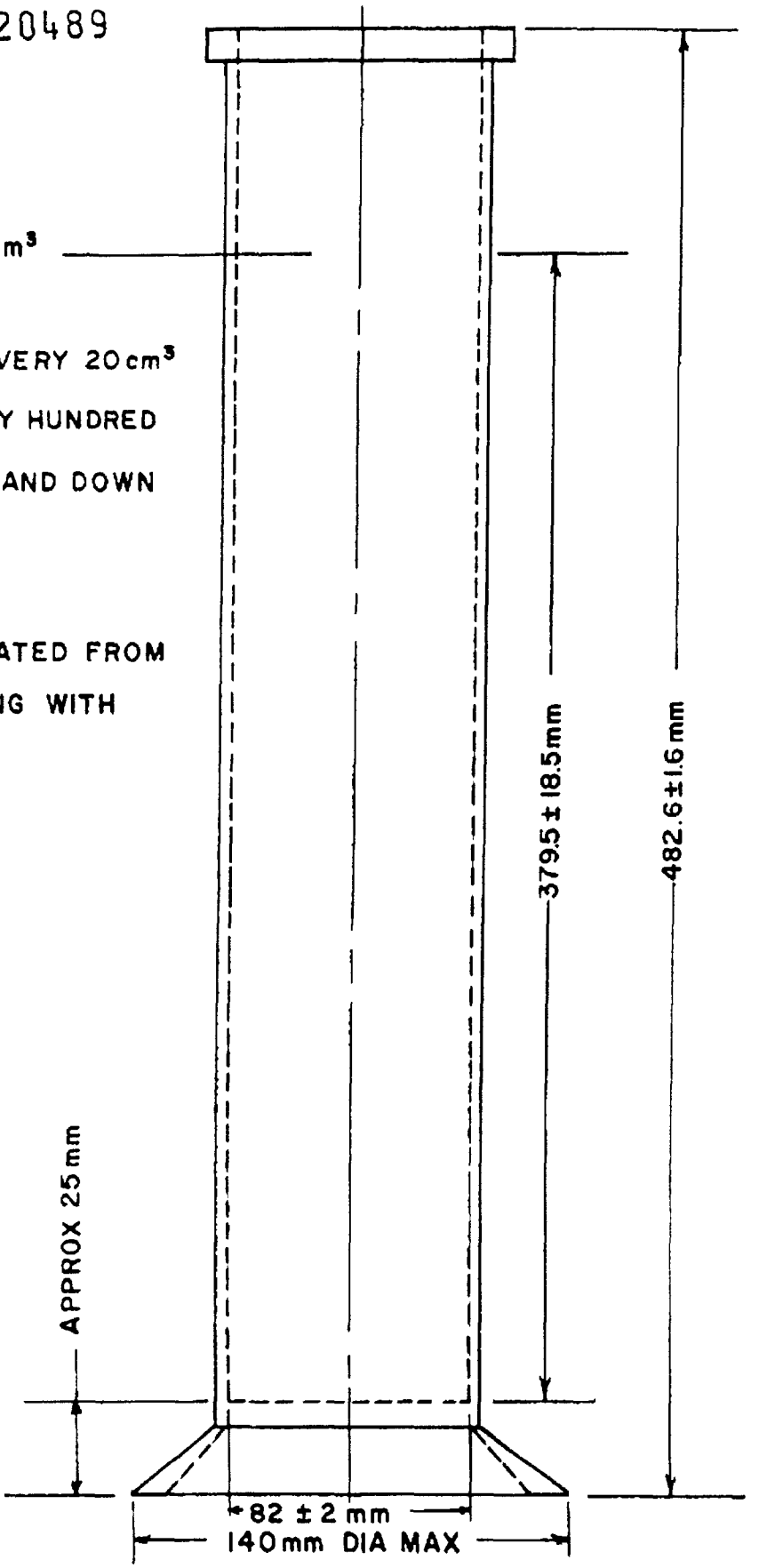

Fig. 1- Graduated Cylinder

D-1/6
(REVISED 1976)

ST0720490

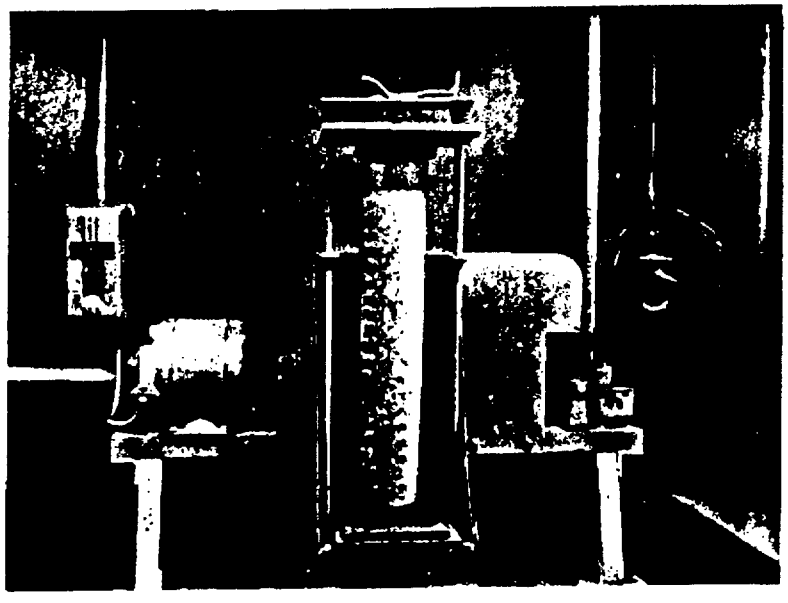

Fig. 2- Mechanically Driven Inverter

ST0720491

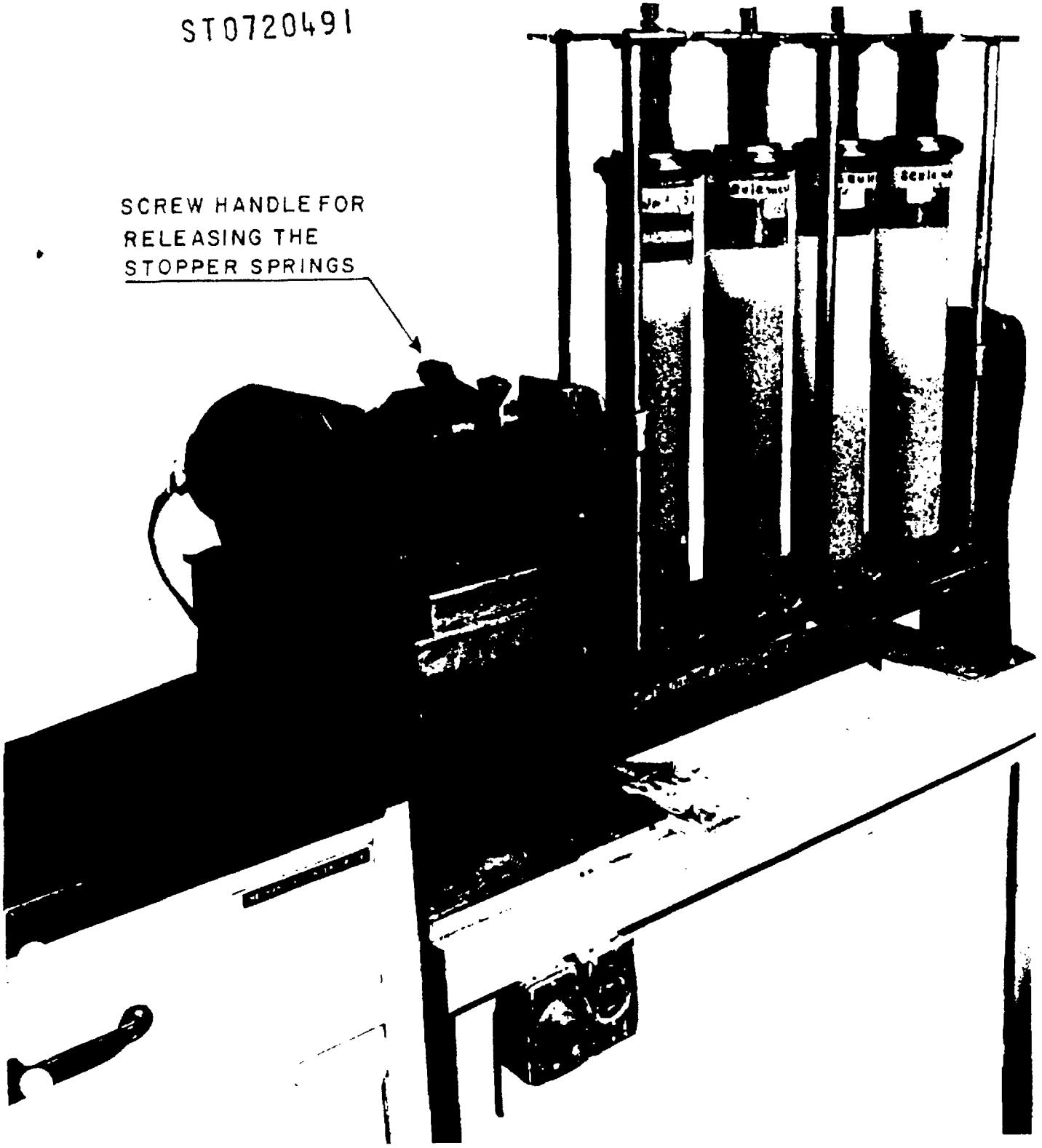

Fig. 3 - Alternative Design of Mechanically Driven Inverter



0491.A

Chrysotile Asbestos Test Manual

Third edition

ST0720492

D-2-73

DYCKERHOFF AIR PERMEABILITY

Supersedes Method D-2 of the 1966 second edition

Revised and adopted by:

Asbestos Textile Institute - 7 Jun 1973

Quebec Asbestos Mining Association - 15 Mar 1973

Printed in USA

ST0720493

Method for

DYCKERHOFF AIR PERMEABILITY[1]

Designation D-2-73

1. Scope

1.1 This method covers the measurement of the relative degree of openness or degree of fiberization of milled asbestos fiber by air permeability.

1.2 This is an alternative procedure to Method D-3[2], and covers the use of the Dyckerhoff Apparatus. This method is limited to fibers within the range from 10 to 600 Dyckerhoff seconds.

1.3 Samples containing excessive quantities of nonfibrous particles or contaminants will not give reliable or meaningful results.

2. Summary of Method

2.1 By this method the resistance to air flow of a compressed specimen of fixed weight and volume is determined.

2.2 Optional calibration of the manometer of the Rapid Surface Area Tester (Method D-3) in equivalent Dyckerhoff seconds, which are the units of this method, permits comparison of results by both methods on the same basis.

2.3 The time required to draw a given volume of air through the specimen under specified conditions of varying hydraulic head is determined. This time is taken as a measure of the air permeability of the specimen.

3. Significance

3.1 The degree of fiberization or subdivision of the asbestos fiber bundles in a specimen is related to its resistance to air flow. The number and size of the pores in the specimen are a function of the size of the fiber bundles and determine the resistance to air flow through the plug. Test specimens that have undergone a higher degree of fiberization will yield higher

results provided the specimens compared are of similar relative densities and other properties are not markedly different.

3.2 This method is suitable for specification acceptance, manufacturing control, development, and applied research.

3.3 It must not be assumed that all test specimens with equal test results have undergone equivalent degrees of fiberization. Some types of asbestos fiberize more readily than others. Particle size and fiber diameter distribution can influence air permeability readings.

4. Sampling

4.1 Take a sample in accordance with Method A-1[2].

5. Test Specimen

5.1 Spread the sample on a smooth working surface in layers to form a flat pile of uniform thickness 13 mm (0.5 in.) thick, and quarter the pile.

5.2 Set aside opposite quarters and repeat 5.1 with the remaining quarters.

5.3 Select two 50 ± 0.01 g (1.6075 ± 0.0003 oz.) specimens (Note 1) by taking pinches from each quarter of the pile until a quantity is obtained that will require minimum adjustment to the desired weight.

Note 1 - The SI metric system of units shall be used for referee testing.

5.4 When pinches are taken be careful to include the total cross section of the pile from top to bottom at the point where it is taken, including any grit or fines that may have segregated at the bottom.

5.5 Any lumps or knots of matted fiber still remaining in the specimen should be disentangled before cell loading is begun.

6. Calibration and Standardization

6.1 Calibrating Standards[3]:

6.1.1 The calibrating standards for this method consist of capillary glass tubing mounted in a holder which suitably fills the specimen cavity in the permeability cell.

6.1.2 The low standards have an equivalent Dykerhoff time of efflux in the range from 20 to 30 s. They are made from glass tubing with a bore of 0.311 ± 0.012 mm (0.01225 ± 0.0005 in.) and about 13 mm (0.5 in.) long.

6.1.3 The high standards have a Dyckerhoff time of efflux fixed in the range from 350 to 450 s. They are made from glass tubing with a bore of 0.178 ± 0.013 mm (0.0070 ± 0.0005 in.) and about 39.5 mm (1.55 in.) long.

6.1.4 A Dyckerhoff capillary tube holder is shown in Fig. 1.

6.1.5 For accurate results keep calibrating standards in airtight containers or in a desiccator when not in use.

6.1.6 Clean capillary tubes with dry, compressed air, free from contaminants, at 138 kPa (20 psig), if permanently mounted, or 34.5 kPa (5 psig) if temporarily mounted, prior to calibration. Allow the air to flow 60 s.

6.2 Instrument Calibration.

6.2.1 Fixed Electrode Apparatus:

6.2.1.1 Verify the apparatus as described in Section 8.

6.2.1.2 Insert a calibrating standard mounted in its capillary tube holder into the cell using the handle shown in Fig. 6 (a) and clamp the cell in position on the apparatus. Omit the spacer from the assembly so that the plunger may seat perfectly.

6.1.2.3 The liquid level in the manometer must be at the indicated etch mark on the tube before the suction head is established.

6.2.1.4 Apply vacuum to the manometer until the lower liquid level in the manometer is just below the tip of the longest electrode.

6.2.1.5 Reset the stop clock to zero. Observe the reading on the dial after the level of the liquid has reached the shortest electrode, and the clock has stopped.

6.2.1.6 Take two readings. If the second reading differs appreciably from the cumulative average value of the standard, refer to the instructions supplied with the standards to locate and eliminate the source of variation.

6.2.1.7 Obtain readings on the calibrating standard as directed in 9.5 to 10.1.

6.2.1.8 Each time a working standard is used, and valid readings are obtained, the average reading must be recorded and the average of all previous readings, including the nominal value

and the latest reading, must be computed. This all time average value of the working standard is referred to as the cumulative average value.

6.2.1.9 If the value obtained with the calibrating standard is within 3 percent of the cumulative average, that value is accepted and the apparatus may be considered free from defects.

6.2.1.10 If the deviations exceed 3 percent, examine the apparatus for defects and rectify as described in the instructions supplied with the standards.

6.2.1.11 The difference between the average reading (initial or recheck) and the cumulative average, which may be positive or negative, must be applied as a correction to subsequent values obtained on unknown asbestos specimens.

6.2.1.12 When the correction exceeds 6 percent of the nominal value, the standard should be returned to the calibrating laboratory for recalibration.

6.2.2 Variable Electrode Apparatus:

6.2.2.1 Adjust the electrodes so that valid readings obtained on the calibrating standard will coincide with the nominal value within 3 percent.

6.2.2.2 Measure the position of the variable electrode relative to the apparatus housing whenever a new working standard is put into service, and record this vertical distance for later reference.

6.2.2.3 When electrode adjustments exceed 2.5 mm (0.1 in.), return the standard to the calibrating laboratory for recalibration.

6.2.2.4 Obtain readings on unknown asbestos specimens directly, without any corrections.

7. Apparatus.

7.1 The Dyckerhoff Air Permeability Apparatus is essentially a means of drawing a definite quantity of air through a prepared bed of asbestos fiber of fixed porosity. The tester is equipped with a manometer, fitted with electrodes, to permit the automatic measurement of the time required to draw a fixed volume of air through the specimen, under a suction head which is inversely proportional to the volume of air drawn. The apparatus[4], is illustrated in Figs. 4, 5, and 7.

7.1.1 Permeability Cell (Fig. 5), consisting of a rigid

cylinder 40.7 mm + 0.025, -0.000 (1.602 in. - 0.0013 -0.0000) inside diameter, of noncorroding metal. The top of the cell is at right angles to the principal axis of the cell. The bottom of the cell forms an airtight connection, by means of a rubber O-ring, with the check valve holder which joins the cell to the manometer. A ledge 5 mm (0.2 in.) in width forms an integral part of the cell, 167 mm + 0.0, -2.0 (6.6 in. + 0.00 - 0.85), from the top of the cell, for support of the perforated metal disk. A pair of hooks must be added to retain the plunger as shown in Figs. 5 and 6 (b). Vertical slots must be cut into the base to supplement the existing helical slots (Fig. 5). The latter are required with the standard apparatus while the former are preferable for use with the cell clamp shown in Figs. 2, 4 and 7.

7.1.2 Plunger - The plunger fits into the cell with a clearance of not more than 0.1 mm (0.004 in.). The bottom of the plunger has sharp square edges and is at right angles to the principal axis. An air vent is provided on each side of the plunger. The top of the plunger is provided with a collar such that when the plunger is placed in the cell and the collar brought into contact with the top of the cell, the distance between the bottom of the plunger and the top of the perforated disk shall be 57.00 ± 0.60 mm (2.2441 ± 0.0237 in.). The plunger supplied with the apparatus must be modified by fitting it with pins on either side of the collar to engage the cell hooks mentioned in 7.1.1, as shown in Fig. 6 (b).

7.1.3 Spacer, constructed of noncorroding metal as shown in Fig. 6 (c). This item is not supplied with the apparatus. The wire cloth corresponds to U.S. Sieve Series No. 30 described in ASTM Specifications E 11, for Wire-Cloth Sieves for Testing Purposes.[5] The spacer fits inside the cell snugly. The thickness of the spacer, 6.71 ± 0.04 mm (0.2642 ± 0.0015 in.), is set to leave a thickness of bed for the asbestos specimen and filter papers of 50.29 ± 0.64 mm (1.9799 ± 0.0252 in.).

7.1.4 Filter Paper, medium retentive, corresponding to Type 1, Grade B, as prescribed in Federal Specification for Paper; Filtering (UU-P-236). The filter paper disks shall be circular, with smooth edges, and shall have the same diameter as the inside of the cell.

Note 2 - Filter paper disks that are too small may leave part of the sample adhering to the inner wall of the cell above the top disk. When too large in diameter, the disks have a tendency to buckle and cause erratic results.

7.1.5 Perforated Disk, noncorroding metal 1.52 ± 0.04 mm (0.05984 ± 0.00157 in.) in thickness, perforated with 271 holes 1.0 mm (0.04 in.) in diameter equally distributed over the open area left by the inner ledge of the cell. The disk fits inside the cell snugly.

7.1.6 Check Valve Holder, connecting the cell to the

manometer, and joining the manometer to a suction pump through a rubber sleeve type of check valve. This valve allows air to be evacuated from the manometer, by means of the suction pump, but prevents flow in the other direction.

7.1.7 Suction Pump, consisting of a simple piston in a cylinder. It serves to evacuate the air between the cell and the liquid surface in the manometer thus causing the liquid to rise in one branch, and to fall in the other to a point below the tip of the longest electrode. A suction head is thus created which subsequently draws air through the specimen.

7.1.8 Manometer, U-tube, constructed according to the design indicated in Fig. 4, using 20.7 ± 0.1 -mm (0.815 ± 0.004-in.) outer diameter glass tubing with a wall thickness of 1.92 ± 0.12 mm (0.0756 ± 0.0047 in.). The top of one arm forms an airtight connection with the check valve holder which joins the manometer to the cell. The top of the other arm supports three electrodes of different lengths. These are arranged so that when the surface of the liquid traverses the distance between the lower tips of the two shorter electrodes, the volume swept out by the liquid corresponds to the volume of air drawn through the specimen (not precisely equal since air is drawn under varying pressure conditions with consequent change in volume). This volume is approximately 17.80 cm^3 (1.086 $in.^3$). The manometer is mounted so that the arm connected to the cell is vertical. This arm has a line etched around the tube at a height which corresponds to a volume of 100 cm^3 (6.102 $in.^3$) of liquid in the U-tube.

7.1.9 Manometer Liquid - The manometer must be filled to the etch mark with a nonvolatile, nonhygroscopic liquid of low viscosity and sufficient electrical conductivity to energize the electrode circuits. The specific gravity of the liquid supplied with the apparatus is 1.086 ± 0.001.

7.1.10 Timer - The timer contains a mechanical clock movement with a sweep second hand. The timer is started and stopped by means of a lever which is activated by an electric solenoid, governed by the electrode circuits.

7.1.11 Accessories:

7.1.11.1 Tamper, supplied with the apparatus, consisting of a rod 6 mm (0.25 in.) in diameter and 280 mm (11 in.) in length terminated at each end with a disk. One disk is 40 mm (1.5 in.) in diameter and perforated with four holes of 8 mm (0.3 in.) in diameter and four holes of 3 mm (0.125 in.) in diameter symmetrically disposed. This end of the tamper serves to pack the fiber in the cell. The other end is plain, 25 mm (1 in.) in diameter, and is used for pushing the plug of fiber out of the cell after testing.

7.1.11.2 Cell Holder, shown in Fig. 7, is an optional accessory

not supplied with the apparatus, but strongly recommended.

7.1.11.3 Porous Cellulose Filters, 12 mm (0.5 in.) long and 12 mm (0.5 in.) in diameter are supplied with the apparatus for insertion at the top of the check valve holder to prevent the entrance of contamination into the system.

7.1.11.4 Funnel, wide-mouth, for loading the cell.

7.2 Calibrating Standards, as described in 6.1

7.2.1 Handle, for inserting and extracting capillary tube holders in the permeability cell, as described in Fig. 6 (a).

8. Preparation of Apparatus

8.1 Before using or calibrating the instrument, check the system for air leaks as follows:

8.1.1 Seal off the top of the permeability cell by removing the plunger, coating the edge of the cell with petroleum jelly, and sliding a piece of thick, flat glass over the opening. Clamp the cell firmly in position on the apparatus by using a suitable spacer (such as a rubber stopper) of the required thickness on top of the glass.

8.1.2 Apply vacuum to the manometer by means of the suction pump, by rotating the handwheel at the side of the apparatus. The air interface should be drawn as little as possible below the longest electrode. It may not be drawn below the straight part of the manometer leg.

8.1.3 Wait 300 s until the oil drains from the walls of the manometer, then observe the level of the liquid. If the level remains stationary, there are no leaks. If it moves, examine the tubing, check valve, and joints, and correct any defects before proceeding further with the test.

8.1.4 Minute leaks might exist in a system, however, without having a significant effect upon the air permeability value. Changes in the manometer level of less than 2.5 mm (0.1 in.) in 600 s may be neglected. Refer to 12.5. Erratic readings can be caused by fines collecting in the rubber check valve. This valve must be cleansed regularly.

9. Procedure

9.1 Place the perforated disk at the bottom of the cell and cover it with a filter paper.

9.2 Divide the test specimen into four approximately equal parts. Pack the fiber into the cell one part at a time, keeping the bed level uniform, and compress after each addition using the tamping tool supplied with the apparatus. Take care not to compress the fiber beyond final plug length or required porosity of 70 percent.

Note 3 - Assuming an average specific gravity of 2.55 for chrysotile asbestos. Other varieties with different specific gravities will result in different porosities. However, it is still possible to compare different samples of given species with equal densities on the same basis.

9.3 When all the fiber has been added, compress, and place a filter paper disk on top of the fiber bed.

9.4 Place the spacer, screen side down, upon the filter paper, insert the plunger into the cell, and compress until the collar is seated flush with the top of the cell.

9.5 Fasten the hooks on the cell to the plunger to prevent fiber springback and clamp the cell in position on the apparatus. Test the specimen under compression. Caution; excessive holder pressure may allow contact between the perforated disc mentioned in 7.1.5 and the filter described in 7.1.13.3, and thus affect results.

9.6 Turn the suction handwheel to the filling position to displace the liquid in the manometer. Then turn it to the measuring position and reset the clock to zero. This procedure starts the automatic process which will indicate on the clock the time required for the fixed volume of air to permeate through the specimen.

9.7 Procedure Using the Optional Cell Holder and Dyckerhoff Cell - If it is desired to compare results obtained by means of the Rapid Surface Area Tester (Method D-3) with the results obtained by this method, proceed as follows:

9.7.1 Determine the Dyckerhoff air permeability on a fiber sample, or on a Dyckerhoff capillary calibrating standard, as desired, as in 6.2 or in Section 9.

9.7.2 Transfer the cell from the Dyckerhoff Tester to the cell holder shown in Fig. 2 and test with the Rapid Surface Area Tester,as described in Method D-3.

Note 4 - Use of the optional cell holder and Dyckerhoff cell with the Rapid Surface Area Tester instead of the standard cell, will give slightly different results due to differences in geometry of the interior of these cells.

10. Calculation

10.1 Record the time readings to the nearest estimated 0.1 s. Take four readings on each specimen and calculate the average.

10.2 The expected maximum difference between any individual reading and the average is ± 3.0 percent. When the maximum difference is exceeded (Note 5), repeat the test by taking readings on a new test specimen.

Note 5 - When the instrument has not been in use for some time the first reading may be erratic. In that case discard the first reading and replace it with an additional reading.

10.3 Results may be checked by Method D-3 using the Dyckerhoff cell as described in 9.7, or using the other cell. Refer to Note 6, and 2.2.

Note 6 - The Rapid Surface Area Tester may be correlated with the Dyckerhoff Air Permeability Tester by taking readings as described in 9.7 or as in Method D-3 and plotting the Dyckerhoff time readings against the effective surface area results obtained. An example of a correlation graph for two given instruments is shown in Fig. 3.

11. Report

11.1 Fully identify the sample stating the origin and the designation.

11.2 Report the mean value of the average readings on two acceptable test specimens.

12. Precision and Accuracy

12.1 Reproducibility within ± 3.0 percent of the average can be obtained on homogeneous samples free from nonfibrous contaminants, with a given setting of the instrument.

12.2 The calibrating procedure, however, permits ± 3.0 percent deviation from the cumulative average value of the calibrating standard.

Note 7 - Duplication of the atmospheric conditions used for calibration of the standards is recommended for greater precision. A statement of standardization conditions is included with the standards.

12.3 One source of error resides in the clock movement of

older apparatus which ticks 152 times per minute instead of the required 600 times to permit readings to 0.1 s.

12.4 Another source of error is the formation of drops at the tips of the electrodes, which short-circuit the timer solenoid. The probable errors are 2 and 0.2 s respectively, for high and low standards.

12.5 Minute air leaks mentioned in 8.1.4 become significant for readings above 600 s.

FOOTNOTES

1. Supersedes designation D-2 of the 1966 second edition. Dates of adoption or latest revision: Asbestos Textile Institute, adopted 7 Jun 1973, latest editorial revision 28 Feb 1974; Quebec Asbestos Mining Association, adopted 15 Mar 1973, latest editorial revision 14 Mar 1974.

2. Appears in Testing Procedures for Chrysotile Asbestos Fibre, third edition, available from Quebec Asbestos Mining Association, 580 Grande Allée East, Suite 320, Quebec, P.Q., Canada, G1R 2K2.

3. Calibrating standards mounted in approved capillary tube holders are obtainable from the Director, QAMA Testing Research Laboratory, University of Sherbrooke, Sherbrooke, P.Q., Canada, J1K 2R1. Standards may be permanently or temporarily mounted; however, permanent mountings are recommended.

4. Model LDDA or Model 7207 (Asbestos Model) supplied by Chemisches Laboratorium for Tonindustrie, (1) Berlin-Reinickendord 1, Kopenhagener str. 60-74c., West Germany, is suitable provided it is modified as described in 7.1.1 and 7.1.11.2. Distributors are Alpine American Corp., Michigan Drive, Natick, Mass. 01762, and J.W. Ellis Industries, 111 Queen St. East, Suite 302, Toronto 1, Ont., Canada.

5. Annual Book of ASTM Standards, Part 41.

ST0720504

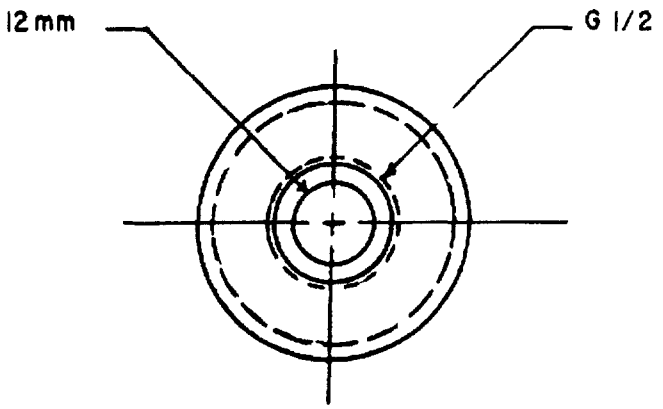

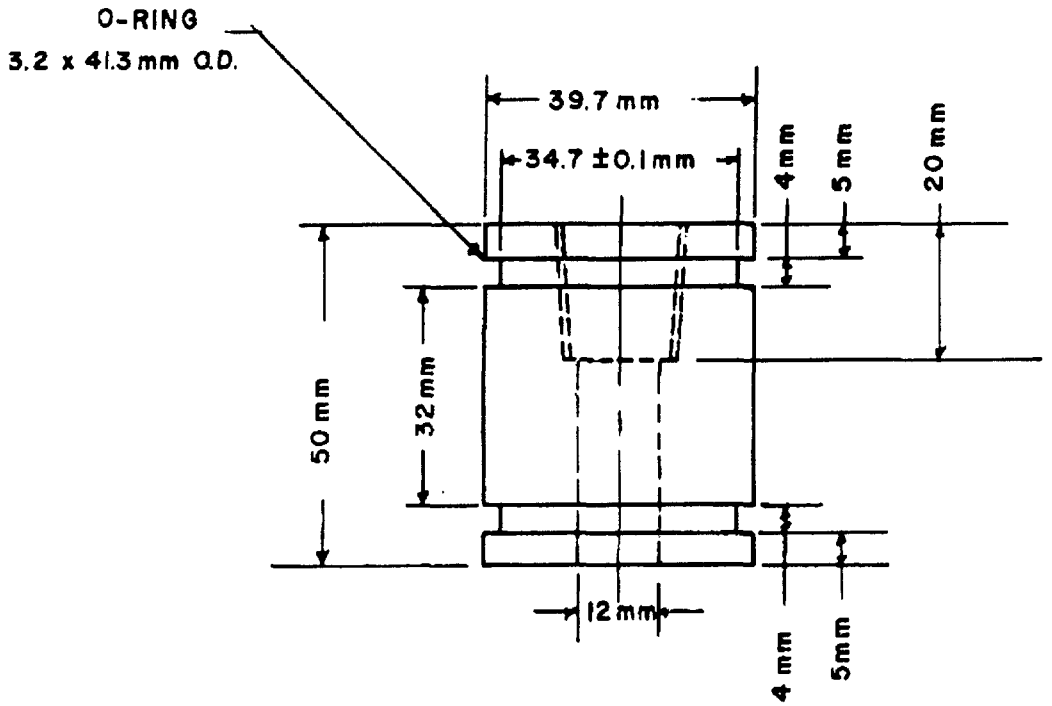

Fig.1- Capillary Tube Holder

D-2/13
(REVISED 1976)

ST0720505

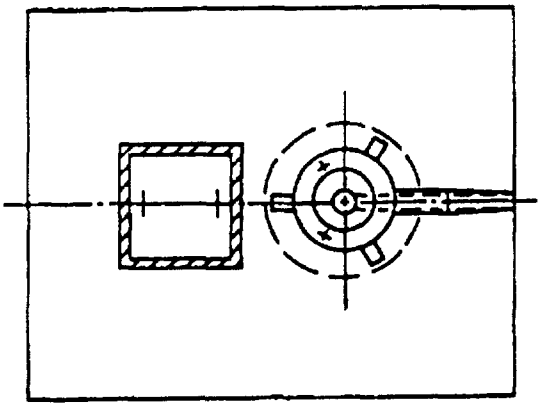

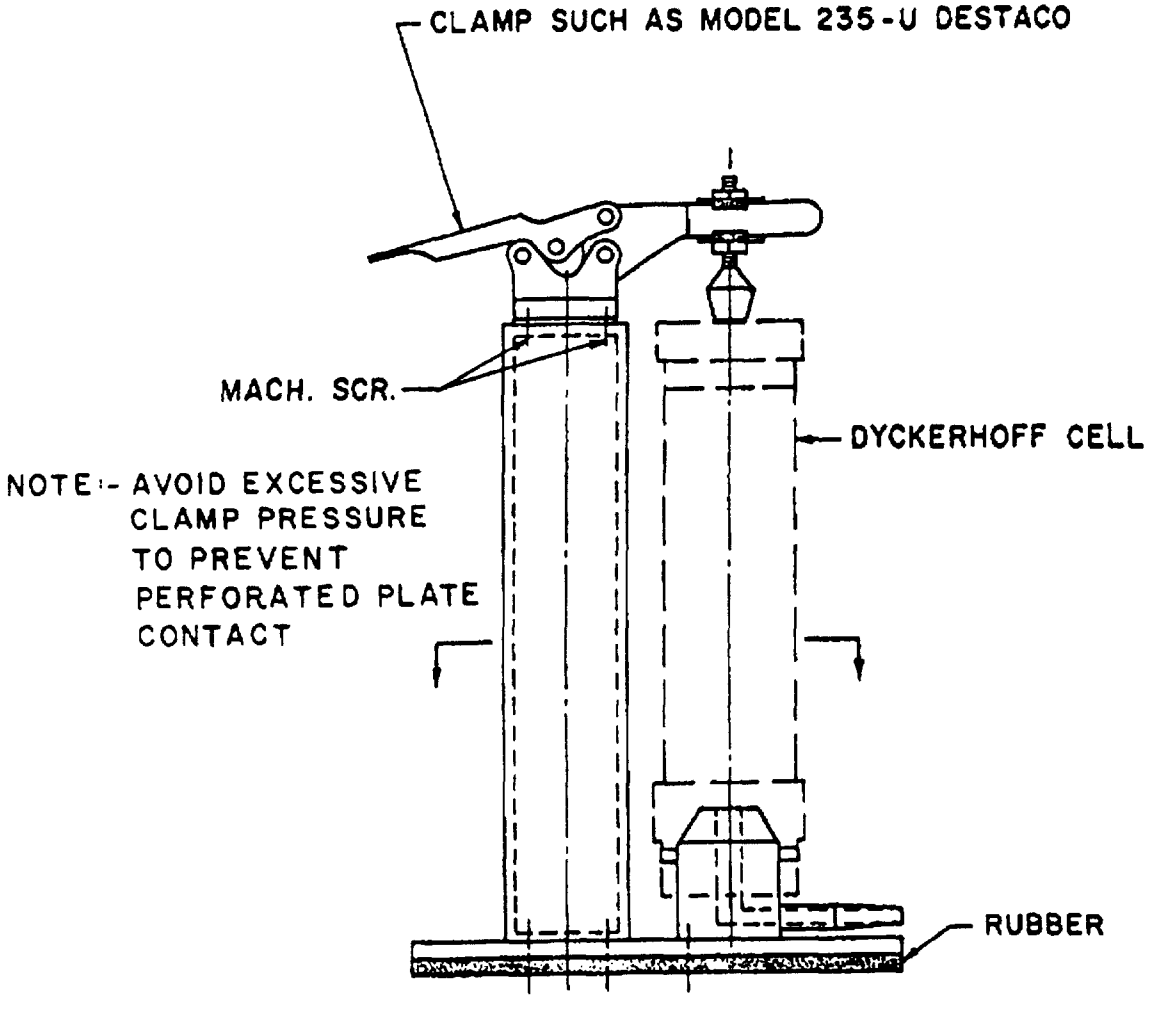

Fig.2- Dyckerhoff Cell Holder D-2/14

ST0720506

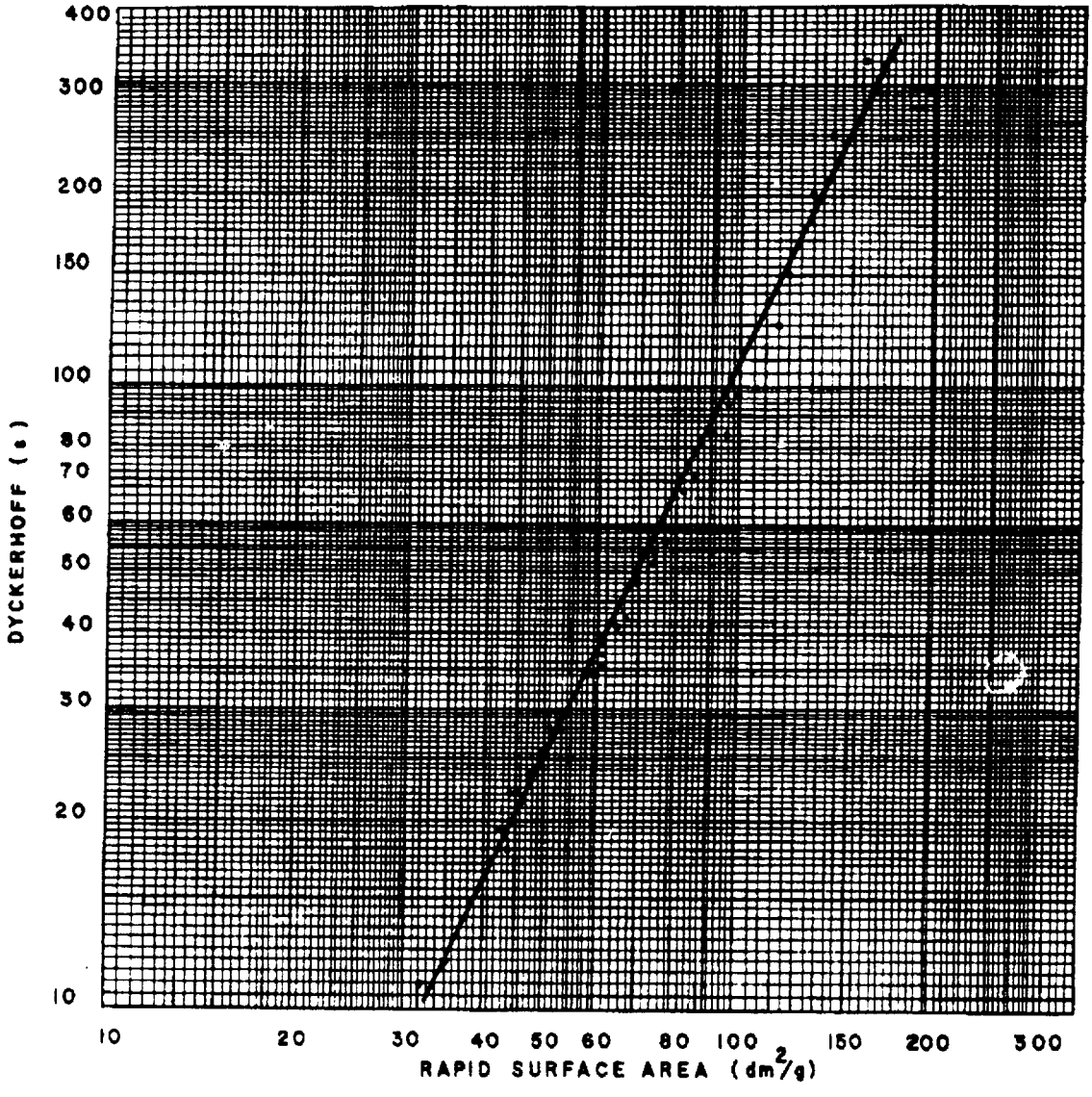

Fig.3 - An example of a plot of Dyckerhoff time versus Rapid Surface Area D-2/15

ST0720507

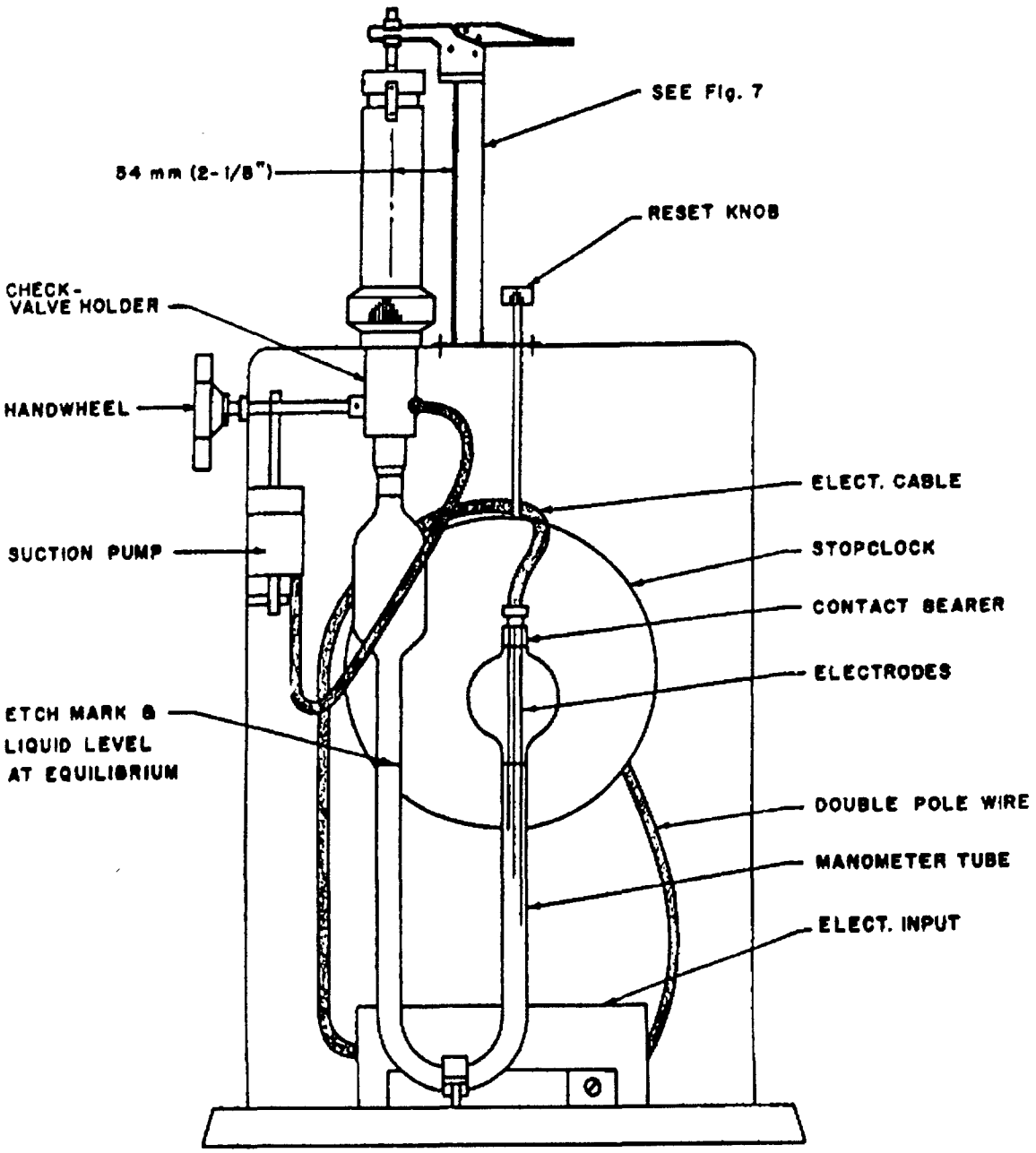

Fig.4- Dyckerhoff Apparatus

D-2/16

ST0720508

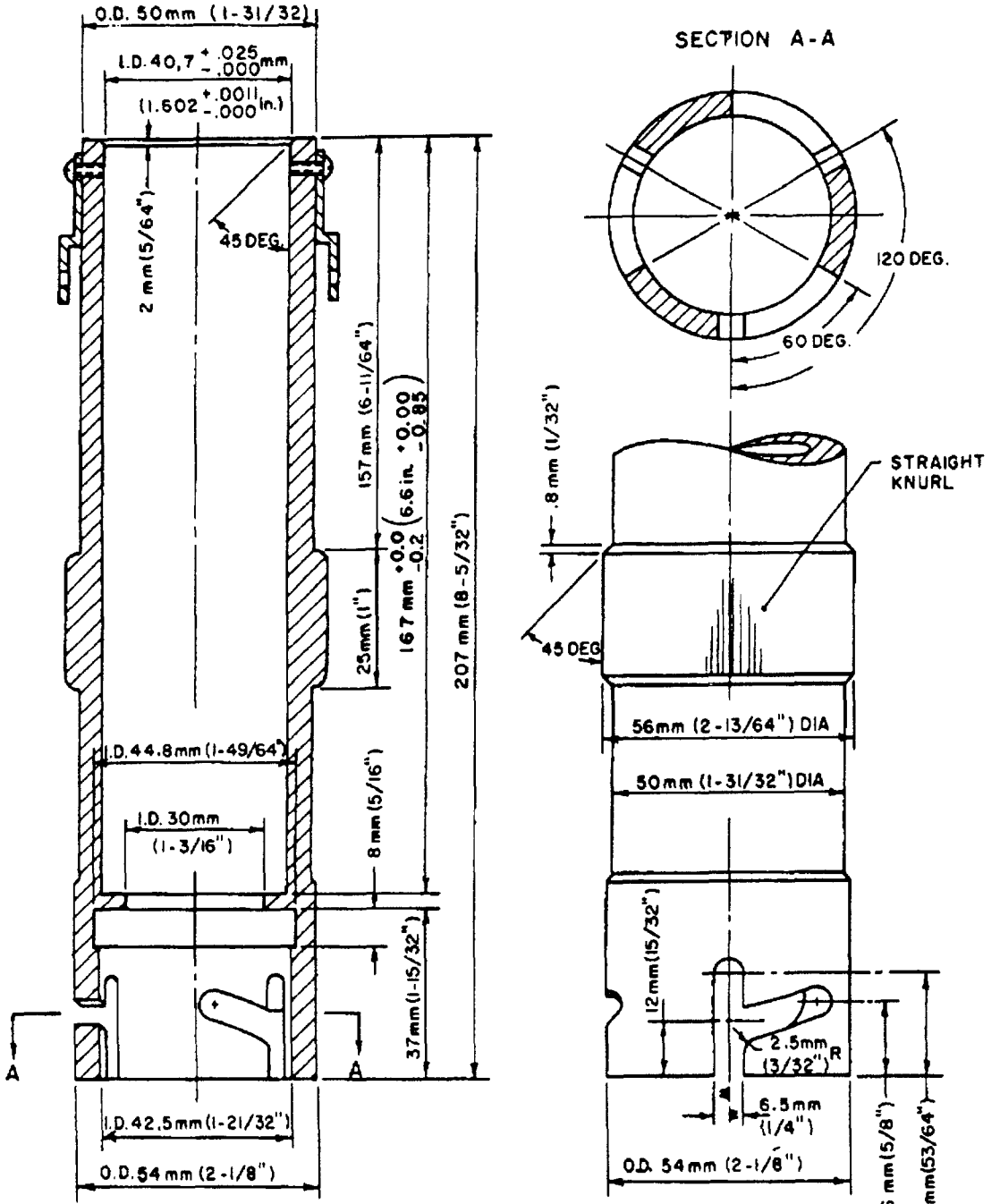

TYPICAL SECTION VIEW
W MACHINE FINISH

ELEVATION

Fig.5-Modified Permeability Cell D-2/17

ST0720509

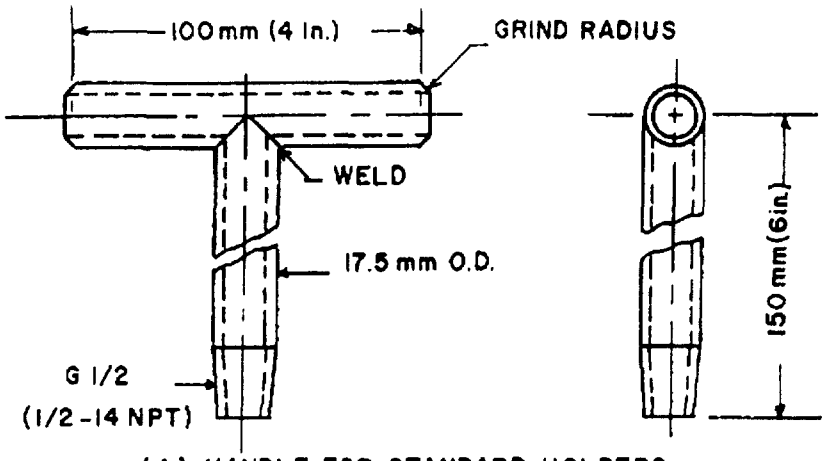

(A) HANDLE FOR STANDARD HOLDERS

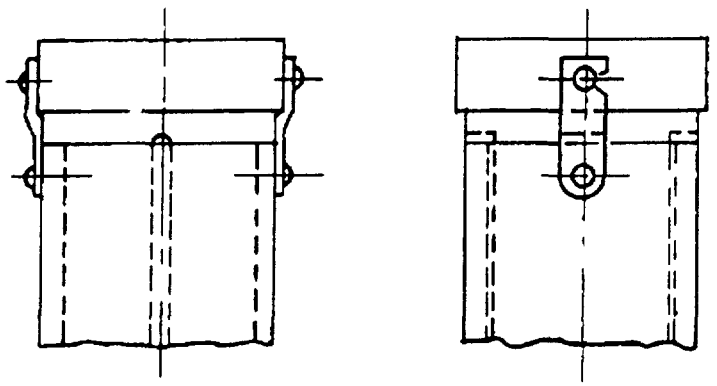

(B) CELL CATCHES (HOOKS)

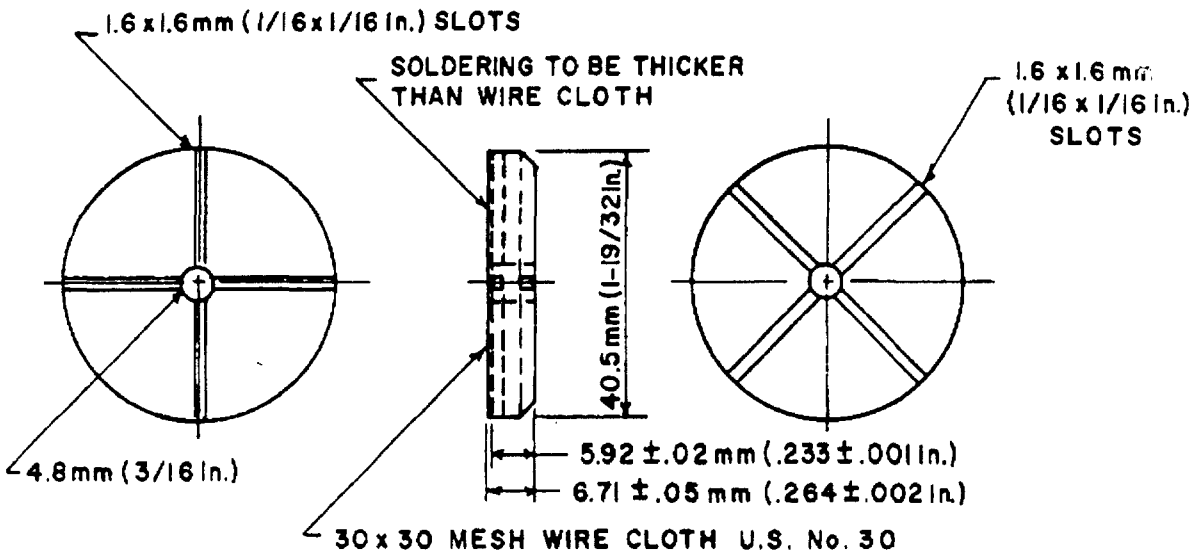

(C) SPACER

Fig.6- Miscellaneous Details

D-2/18
(REVISED 1976)

ST0720510

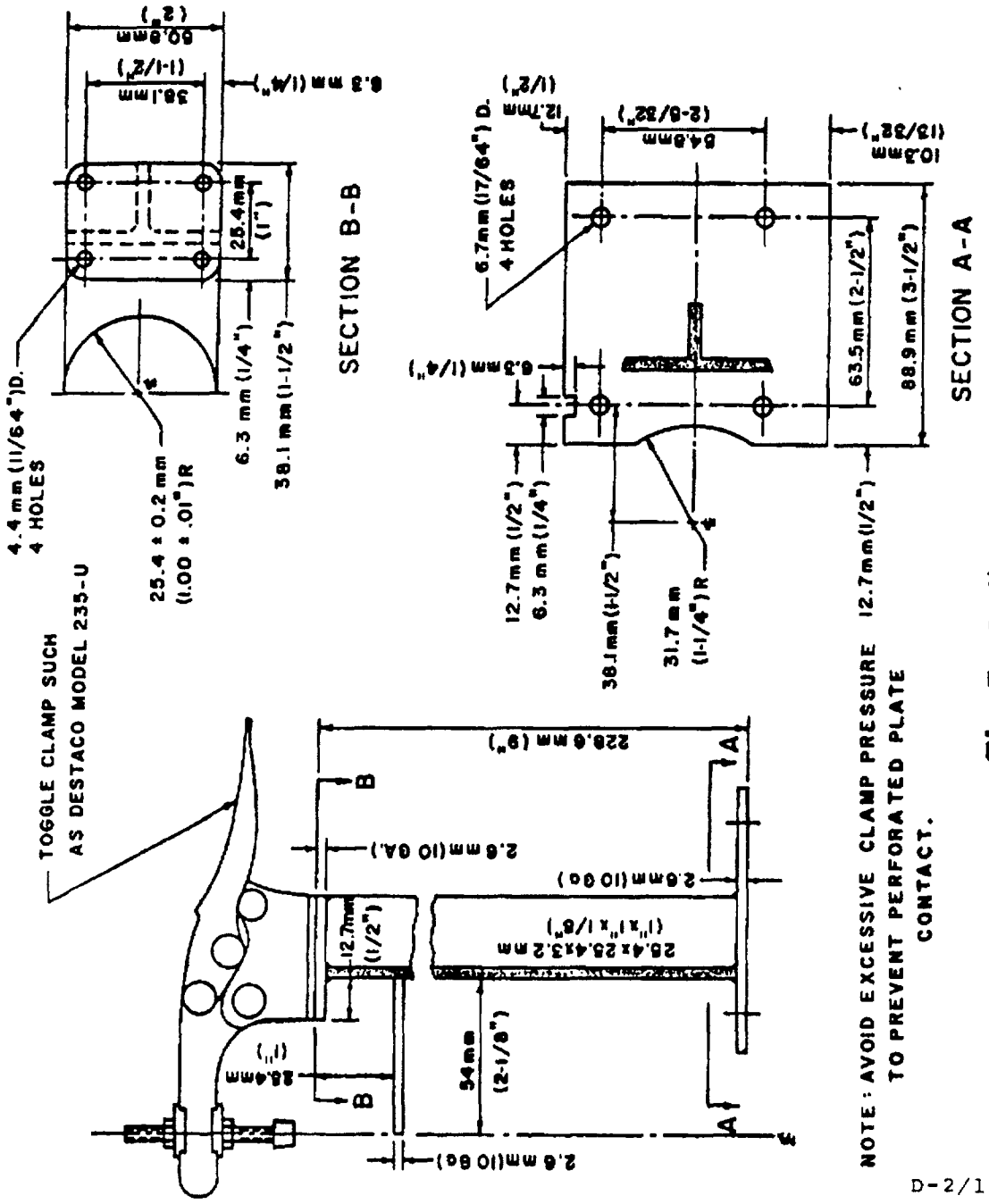

NOTE: AVOID EXCESSIVE CLAMP PRESSURE TO PREVENT PERFORATED PLATE CONTACT.

Fig.7- Cell Holder

Chrysotile Asbestos Test Manual

Third edition

ST0720511

D-3-73

RAPID SURFACE AREA

Supersedes Method D-3 of the 1966 second edition

Revised and adopted by:

Asbestos Textile Institute - 7 Jun 1973

Quebec Asbestos Mining Association - 15 Mar 1973

Printed in USA

ST0720512

Method for

RAPID SURFACE AREA[1]

Designation D-3-73

1. Scope

1.1 This method covers the measurement of the relative degree of openness or degree of fiberization of milled asbestos fiber by air permeability.

1.2 This method is the recommended procedure and describes a determination by means of the Rapid Surface Area apparatus. It is limited to fibers with an effective surface area in the range from 10 to 250 dm^2/g (490 to 12,000 ft^2/lb).

1.3 Samples containing excessive quantities of nonfibrous particles or contaminants will not give reliable or meaningful results.

2. Summary of Method

2.1 The resistance to air flow of a compressed specimen of fixed weight and volume is determined.

2.2 The apparatus is arranged so that the total resistance to air flow remains equal to a fixed hydraulic pressure head. Total resistance includes the resistance of the specimen and the pressure drop across a calibrated capillary tube of known resistance. The contribution of the specimen to total resistance is measured on a manometer calibrated in specific surface area units.

2.3 Optional calibration of the manometer in equivalent Dyckerhoff seconds, that are the units of Method D-2[2], permits comparison of results.

3. Significance

3.1 The degree of fiberization or subdivision of the asbestos fiber bundles in a specimen is related to its resistance to air flow. The number and size of the pores in the specimen are a function of the size of the fiber bundles and determine the resistance to air flow through the plug. Test specimens that

have undergone a higher degree of fiberization will yield higher results provided the specimens compared are of similar relative densities and other properties are not markedly different.

3.2 This method is suitable for specification acceptance, manufacturing control, development, and applied research.

3.3 It must not be assumed that all test specimens with equal test results have undergone equivalent degrees of fiberization. Some types of asbestos fiberize more readily than others. Particle size and fiber diameter distribution can influence air permeability readings.

4. Sampling

4.1 Take a sample in accordance with Method A-1[2].

5. Test Specimen

5.1 Spread the sample on a smooth working surface in layers to form a flat pile of uniform thickness 13 mm (0.5 in.) thick, and quarter the pile.

5.2 Set aside opposite quarters and repeat 5.1 with the remaining quarters.

5.3 Select two 50 ± 0.01-g (1.6075 ± 0.0003-oz) specimens (Note 1) by taking pinches from each quarter of the pile until a quantity is obtained that will require minimum adjustment to the desired weight.

Note 1 - The SI metric system of units shall be used for referee testing.

5.4 When pinches are taken, be careful to include the total cross section of the pile from top to bottom at the point where it is taken, including any grit or fines which may have segregated at the bottom.

5.5 Any lumps or knots of matted fiber still remaining in the specimen should be disentangled before cell loading is begun.

6. Calibration and Standardization

6.1 Calibrating Standards[3]:

6.1.1 The calibrating standards for this method consist of capillary glass tubing mounted in a holder which suitably fills

the specimen cavity in the permeability cell.

6.1.2 The low standards have an equivalent surface area range from 45 to 55 dm^2/g (2200 to 2700 ft^2/lb). They are made from glass tubing with a bore of 0.311 ± 0.012 mm (0.01225 ± 0.0005 in.) and about 13 mm (0.5 in.) long.

6.1.3 The high standards have an equivalent surface area range from 200 to 230 dm^2/g (9770 to 11,200 ft^2/lb). They are made from glass tubing with a bore of 0.178 ± 0.013 mm (0.0070 ± 0.0005 in.) and about 39.5 mm (1.55 in.) long.

6.1.4 A Rapid Surface Area capillary tube holder is shown in Fig. 4.

6.1.5 For accurate results keep calibrating standards in airtight containers or in a desiccator when not in use.

6.1.6 Clean capillary tubes with dry, compressed air, free from contaminants, at 138 kPa (20 psig), if permanently mounted, or 34.5 kPa (5 psig) if temporarily mounted, prior to calibration. Allow the air to flow 60 s.

6.2 Instrument Calibration.

6.2.1 Verify the apparatus as described in Section 8.

6.2.2 Insert a calibrating standard mounted in its capillary tube holder into the cell using the handle shown in Fig. 6. Insert the end cap of the cell, and screw down the retaining ring using the key and base provided, until there is a positive resistance indicating that the O-ring seal is fully compressed and that metal-to-metal contact has been established between the cell face and the end cap.

6.2.3 Proceed as directed in 9.4 and 9.5. If results differ from the nominal value of the standard by more than ± 3.0 percent, it may be concluded that the equipment is defective and the defect must be rectified before proceeding.

7. Apparatus

7.1 Rapid Surface Area Tester,[4] including 50-g (1.61-oz) brass sample cell, complete with perforated plate, end cap, retaining ring and base. A schematic diagram of the apparatus is shown in Fig. 1. The following accessories which are required are also supplied with the apparatus: filling funnel, tamping rod, and key.

7.2 Source of Clean Air, at approximately 14 kPa (2 psig).

7.3 Optional Cell Holder, shown in Fig. 2 for use with a

Dyckerhoff cell (Fig. 5).

7.4 Standards, as described in 6.1.

7.5 Modify the cell as follows to permit verification of full closure: Close the empty cell as in 9.3 and inscribe a vertical index mark extending from the retaining ring to the wall of the cell.

Note 2 - The optional cell modification shown in Fig. 7 for use with the special clamping device shown in Fig. 8, may be used to ensure complete closure of the cell, to save time, and to prevent damaging the cell components when using bulky specimens. The setscrew ram specified in Fig. 8 may be driven by a powered screw driver with a clutch setting to provide 4.9 kN (1000 lbf) ram pressure. Alternatively, use a hydraulic or a pneumatic ram set to give the same pressure in one smooth stroke.

8. Preparation of Apparatus

8.1 Check the apparatus daily before using, and make the following adjustments when required (see Annex A1 for additional verifications, to be carried out at longer time intervals):

8.1.1 Verify the zero reading of the tester as directed in 9.4 and 9.5 but with the cell empty.

8.1.2 If the manometer does not read zero, check to determine if the manometer is out of plumb.

8.1.3 If the water level is below zero, adjust by adding distilled water through the hole in the reservoir cap.

8.1.4 If the level is above zero, correct it by inserting a wick through the hole to remove excess water. Do not tilt the apparatus.

8.1.5 Ensure that the perforated disk is perfectly seated at the bottom of the sample cell.

9. Procedure

9.1 Place the filling funnel over the open end of the cell and empty one 50-g specimen into it in stages, using the tamping rod at intervals to coax all the specimen past the neck of the funnel; avoid trapping any fiber between the rod and the funnel. In a single motion, press the specimen into the cell until the transverse bar touches the upper edge of the filling funnel.

9.2 Do not compress the fiber in the cell without the

filling funnel in place.

9.3 Slowly withdraw the rod, rotating it slightly to ensure that the compressed fiber is not disturbed. Insert the end cap of the cell, and screw down the retaining ring using the key and base provided, until there is a positive resistance indicating that the O-ring seal is fully compressed and that metal-to-metal contact has been established between the cell face and the end cap. The index marks mentioned in 7.5 must coincide exactly. Refer to Note 2.

9.4 Connect the cell to the rubber discharge tube of the tester and turn on the air supply. Open the control valve on the apparatus until the water level in the front manometer tube begins to fall. When air bubbles begin to issue from the escape holes at the bottom end of the brass tube in the transparent vertical cylinder at the rear of the tester, adjust the control valve until bubbles escape at a rate of about three per second (not more than six).

9.5 When the water level in the manometer tube appears to be stationary, note the scale reading opposite this level. Wait 10 s and read the level again to make sure that it is constant; if not, take another reading after a further 10 s. Estimate the scale reading to half a division, and record this reading as the effective surface area in square decimeters per gram.

9.6 When the reading has been recorded, close the shut-off valve, and disconnect the cell from the apparatus. Do not change the setting of the control valve unless required.

9.7 Repeat 9.1 to 9.6 for the second test specimen.

9.8 Procedure Using the Optional Cell Holder and Dyckerhoff Cell - If it is desired to compare results obtained by means of the Rapid Surface Area Tester with the results obtained by the Dyckerhoff Tester with Method D-2, proceed as follows:

9.8.1 Determine the Dyckerhoff air permeability on a fiber sample, or on a Dyckerhoff capillary calibrating standard, as desired, by Method D-2.

9.8.2 Transfer the cell from the Dyckerhoff Tester to the cell holder shown in Fig. 2, and test with the Rapid Surface Area Tester, as described in 9.4 to 9.7.

Note 3 - Use of the optional cell holder and Dyckerhoff cell with the Rapid Surface Area Tester instead of the standard cell, will give slightly different results due to differences in geometry of the interior of these cells.

10. Calculations.

10.1 If the two results obtained differ by more than two scale divisions, test a third specimen.

10.2 If three tests are made, reject any reading that lies more than two scale divisions from the nearest of the others, and record the average of the remaining readings in square decimeters per gram. Examples are given in Table 1.

Note 4 - The Rapid Surface Area Tester may be correlated with the Dyckerhoff Air Permeability Tester (Method D-2) by taking readings as described in 9.8 or as in 9.1 to 9.7 and plotting the Dyckerhoff time readings against the effective surface area results obtained. An example of a correlation graph for two given instruments is shown in Fig. 3.

ANNEX

A1. MAINTENANCE OF CELL

A1.1 Check the dimensions which control the internal length and diameter of the cell regularly. The dimensions of the components should be such that the effective length occupied by the specimen is 58.903 ± 0.050 mm (2.319 ± 0.002 in.), and the nominal diameter is 38.964 ± 0.050 mm (1.534 ± 0.002 in.).

A1.2 The internal length may be corrected by removing metal very carefully as follows:

A1.2.1 To reduce internal length, remove metal from the end face of the cell.

A1.2.2 To increase the internal length, remove metal from the inner face of the end cap.

A1.3 If the dimensions of the internal length or diameter exceed tolerance limits and adjustments cannot be made, the complete cell should be returned to the supplier in exchange for a new cell.

TABLE 1 Exa[illegible]es

Readings, dm^2/g	Example A	Example B	Example C
1st	46	46	46
2nd	44	42	42
3 rd	...	48	44
Accepted readings	46 44 ...	46 48 ...	46 42 44
Average	45	47	44

ST0720520

FOOTNOTES

1. Supersedes designation D-3 in the 1966 second edition: Dates of adoption or latest revision: Asbestos Textile Institute, adopted 7 Jun 1973, latest editorial revision 28 Feb 1974; Quebec Asbestos Mining Association, adopted 15 Mar 1973, latest editorial revision 14 Mar 1974.

2. Appears in Testing Procedures for Chrysotile Asbestos Fibre, third edition, available from Quebec Asbestos Mining Association, 580 Grande Allée, Suite 320, Quebec, P.Q., Canada, G1R 2K2.

3. Calibrating standards mounted in approved capillary tube holders are obtainable from the Director, QAMA Testing Research Laboratory, University of Sherbrooke, Sherbrooke, P.Q., Canada, J1K 2R1. Standards may be permanently or temporarily mounted. However, permanent mountings are recommended.

4. Available from Turner and Newall Limited Fibre Laboratory, Trafford Park, Manchester, England, M17 1RU, who supply this equipment on a non-profit basis as a service to the Asbestos Industry.

ST0720521

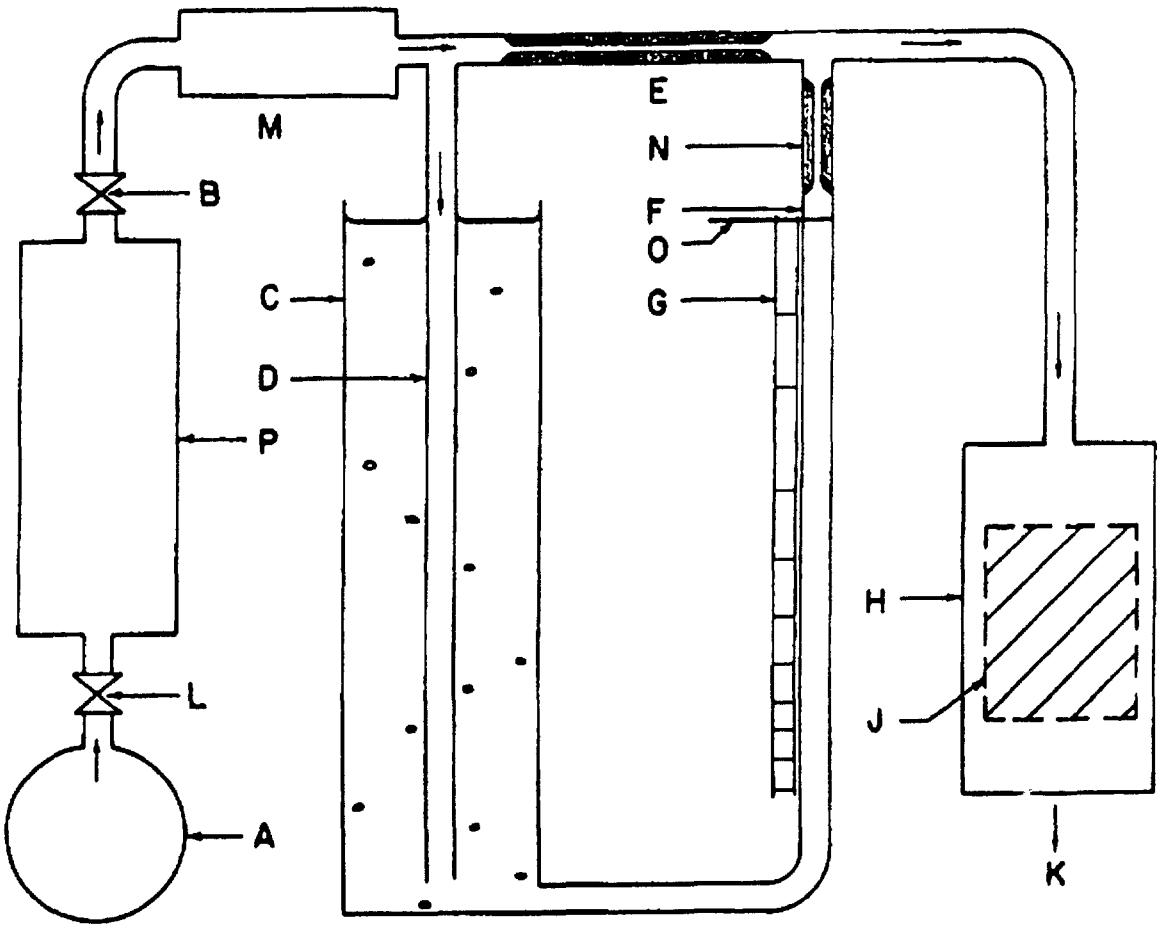

LEGEND

A - Sypply of clean compressed air
B - Control valve
C - Water reservoir
D - Bubbler tube
E - Capillary resistance
F - Manometer leg
G - Manometer scale (Exponential)
H - Permeability cell
J - Test specimen
K - Air outlet
L - Shut-off valve
M - Dust Filter (Fiber glass)
N - Capillary snubber
O - Zero mark on manometer
P - Air dryer or desiccator (Dryerite)

Note 1. - Items A, L, & P are not supplied with the apparatus.

Fig.1— Schematic Diagram of Rapid Surface Area Tester

ST0720522

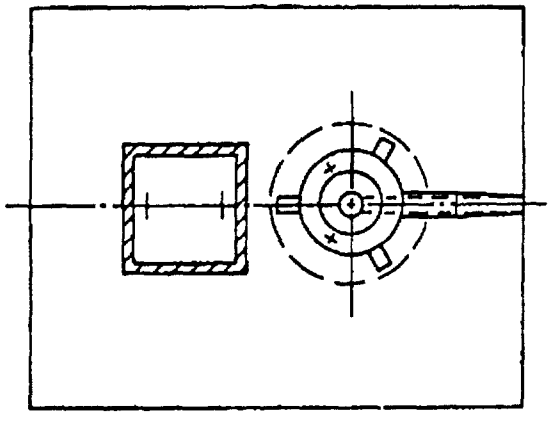

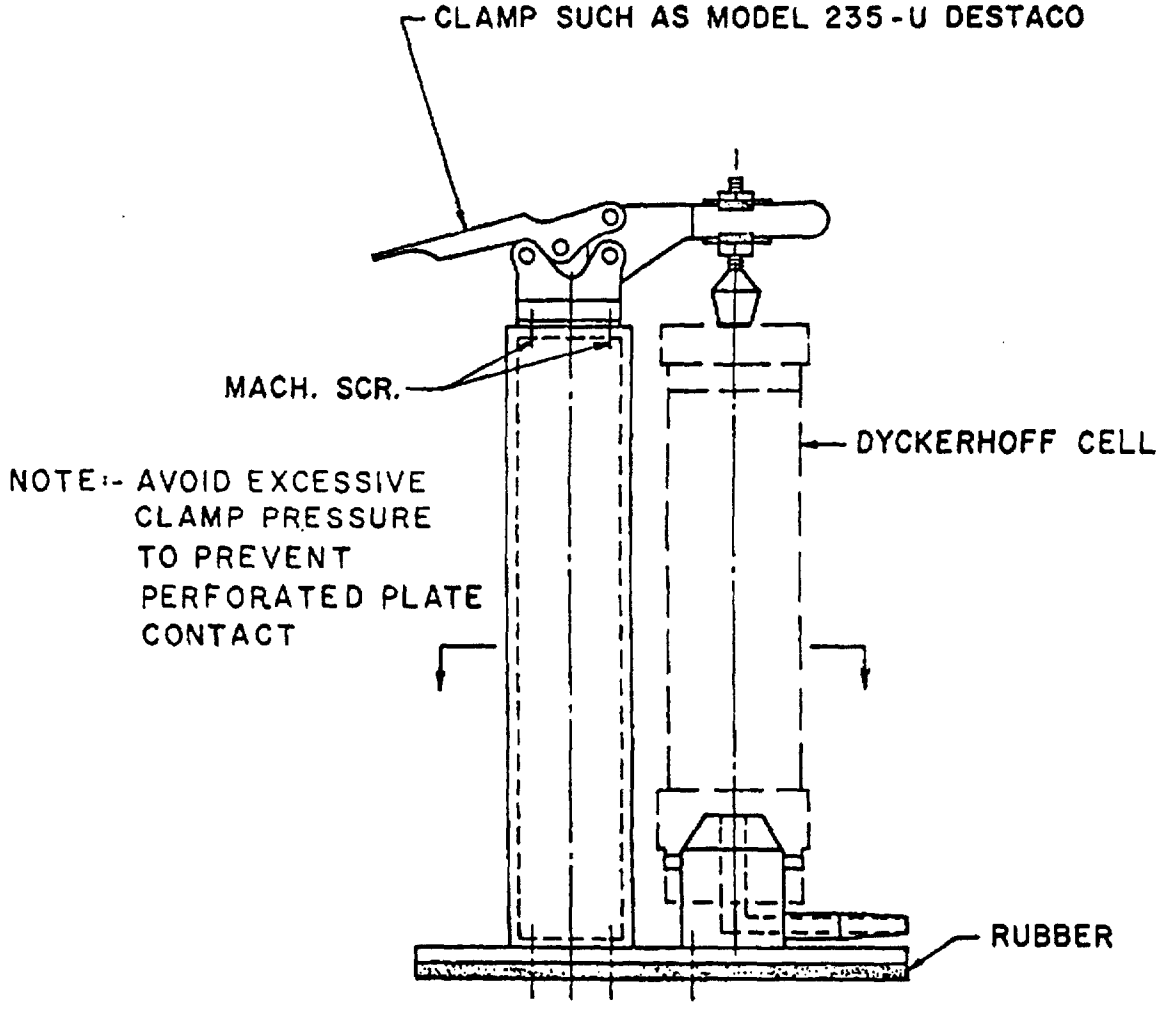

Fig.2- Dyckerhoff Cell Holder D-3/12

ST0720523

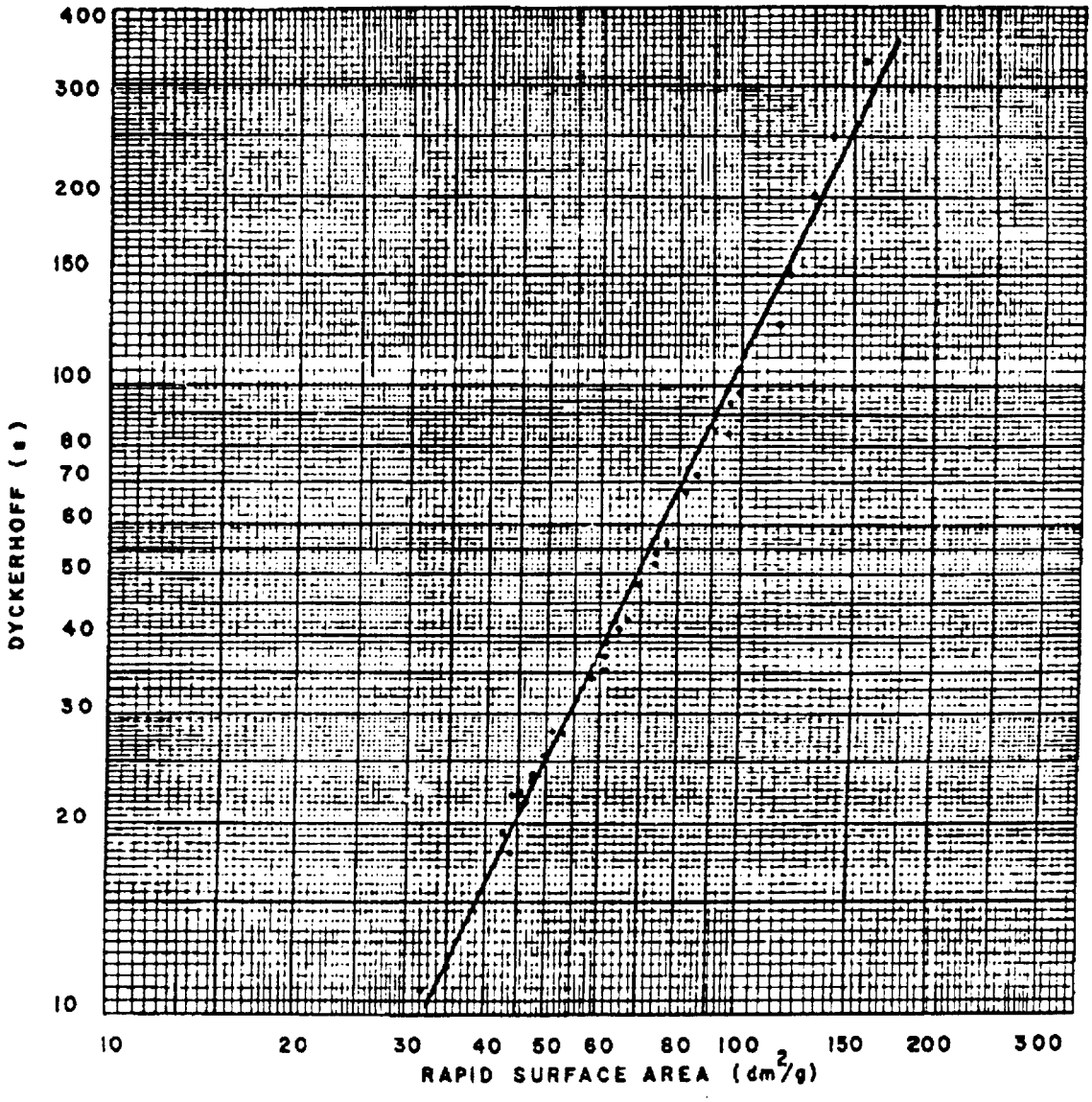

Fig.3- An example of a plot of Dyckerhoff time versus Rapid Surface Area

ST0720524

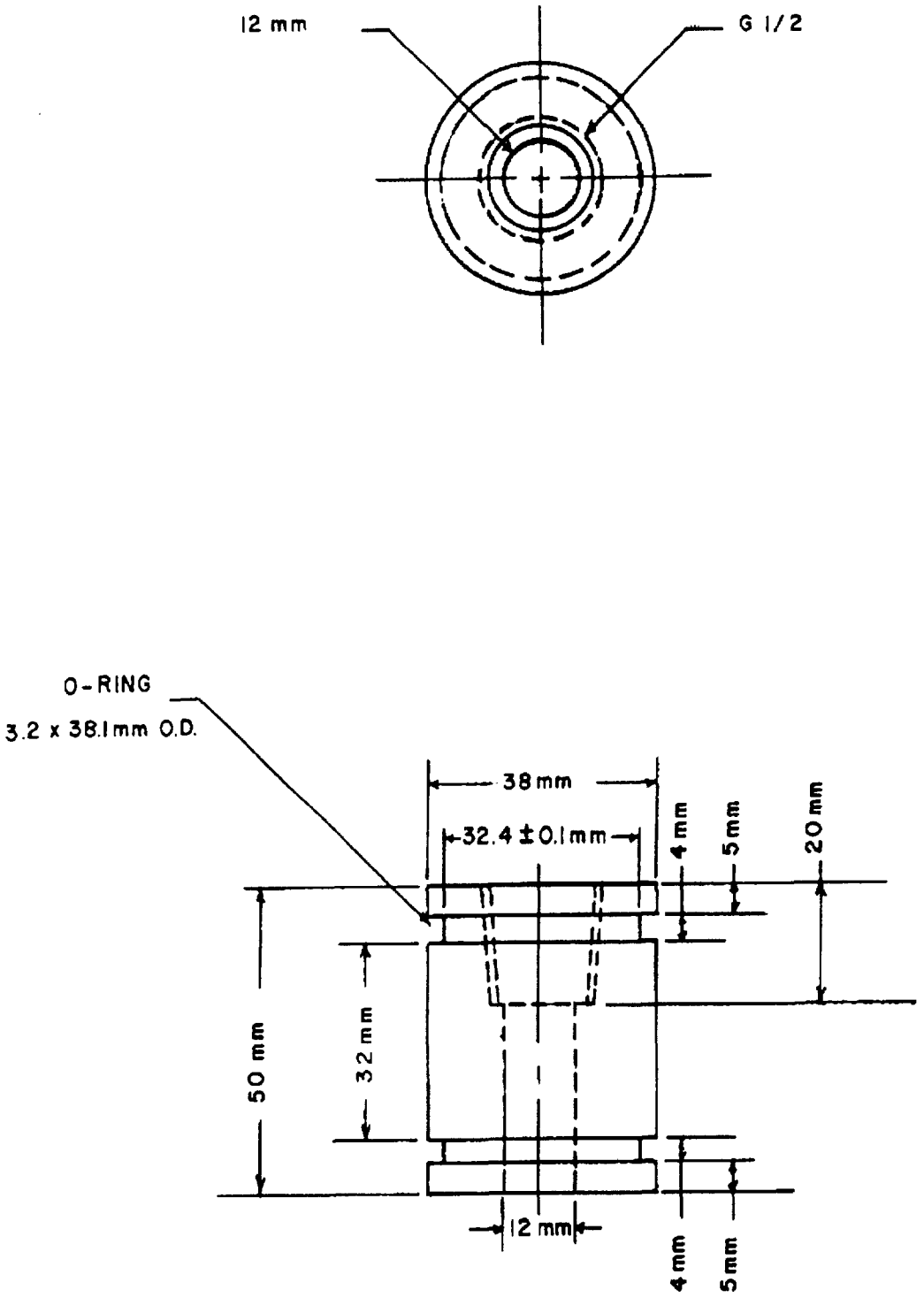

Fig. 4- Capillary Tube Holder

D-3/14
(REVISED 1976)

ST0720525

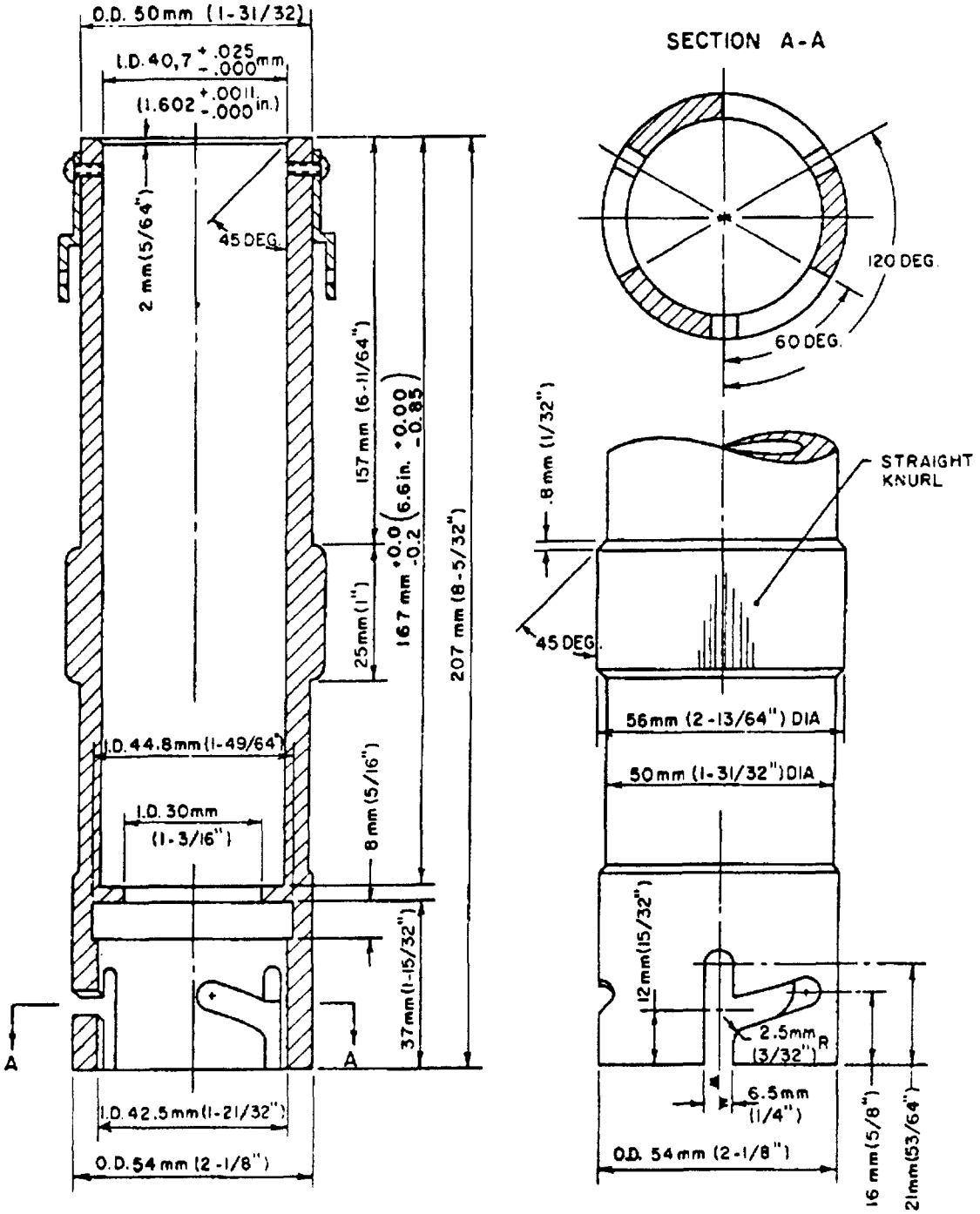

TYPICAL SECTION VIEW
"W" MACHINE FINISH

ELEVATION

Fig.5- Modified Permeability Cell

D-3/15

ST0720526

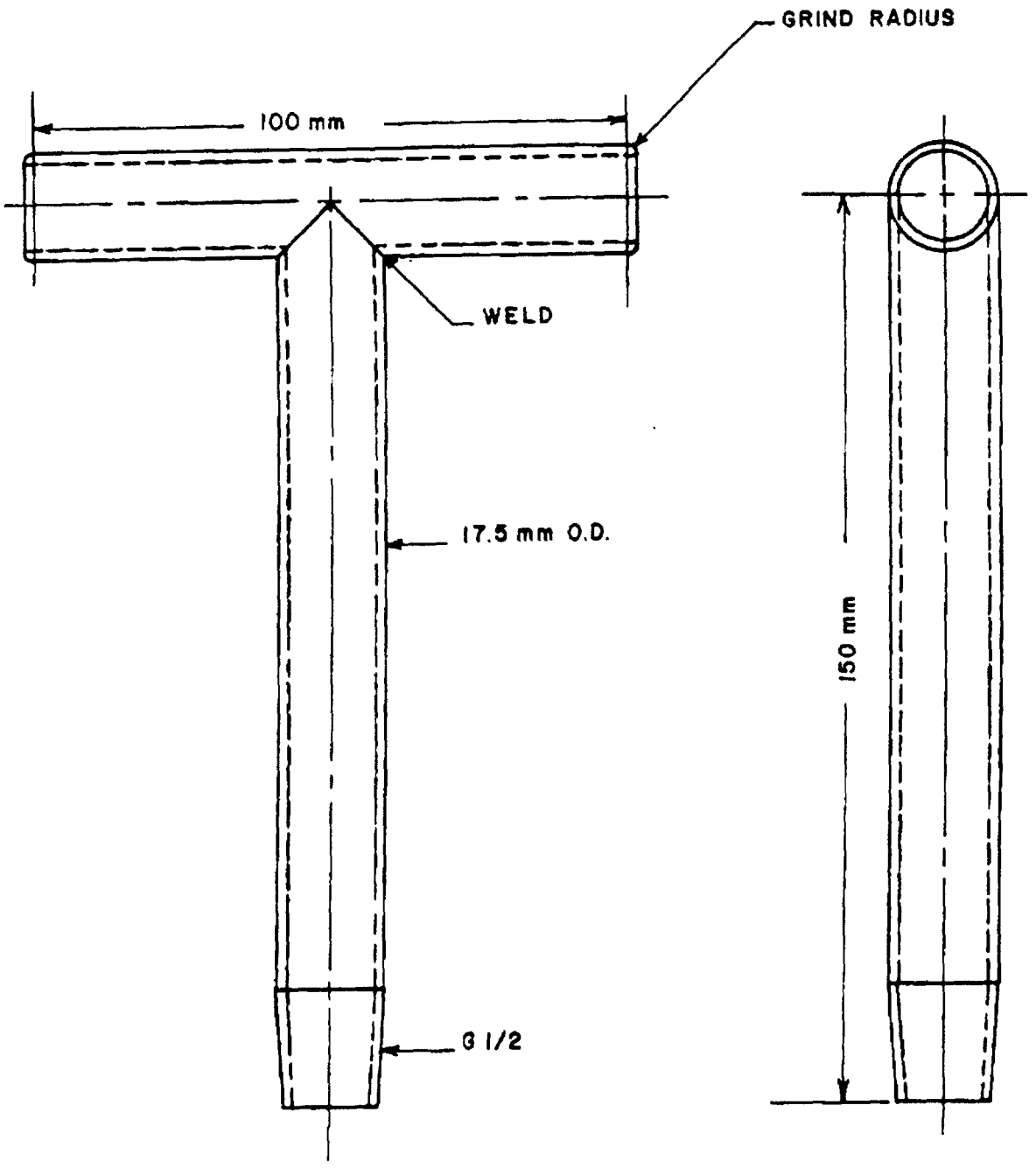

Fig.6- Handle for Standard Holders

D-3/16
(REVISED 1978)

ST0720527

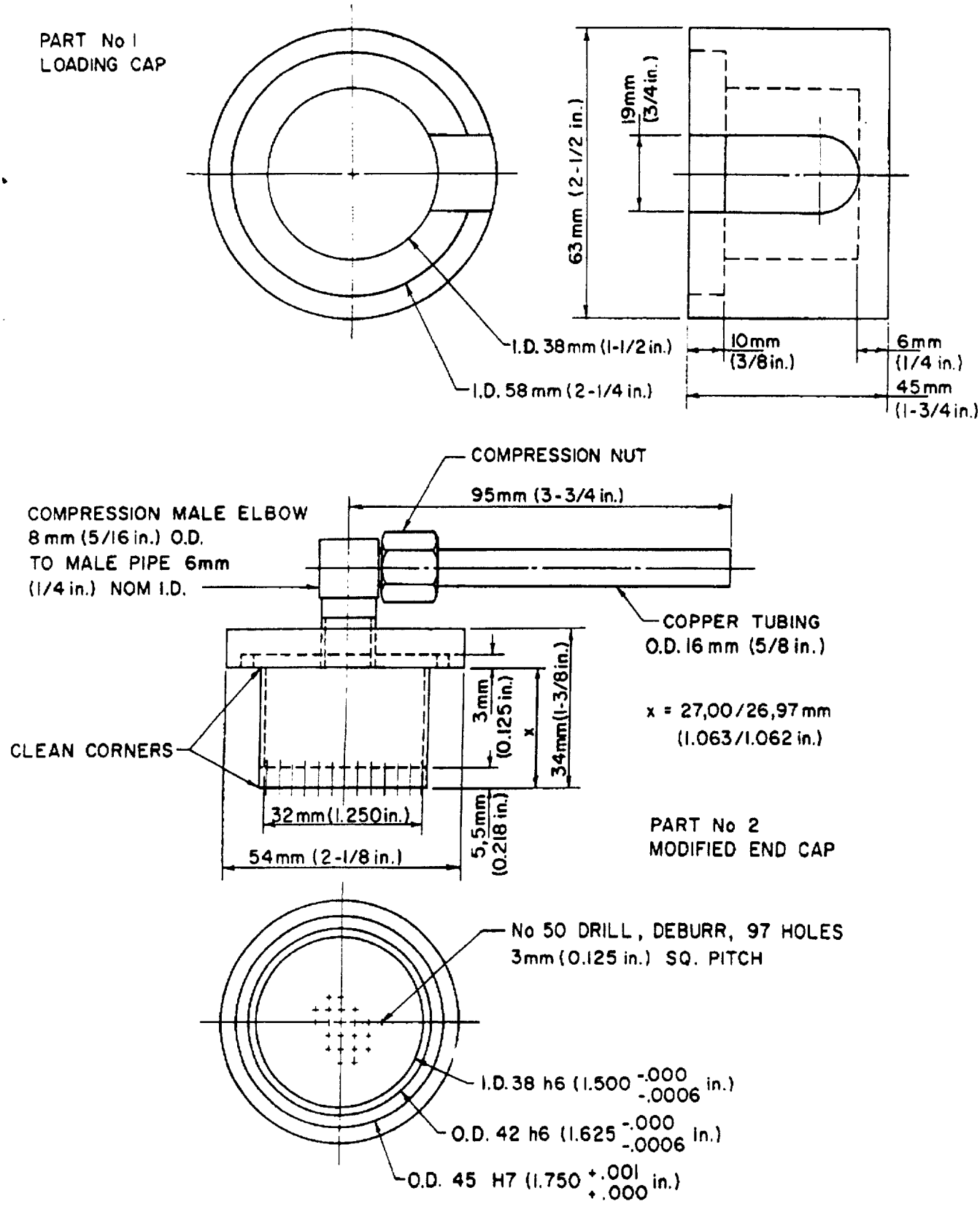

Fig.7- Loading Cap and End Cap Modifications

D-3/17

ST0720528

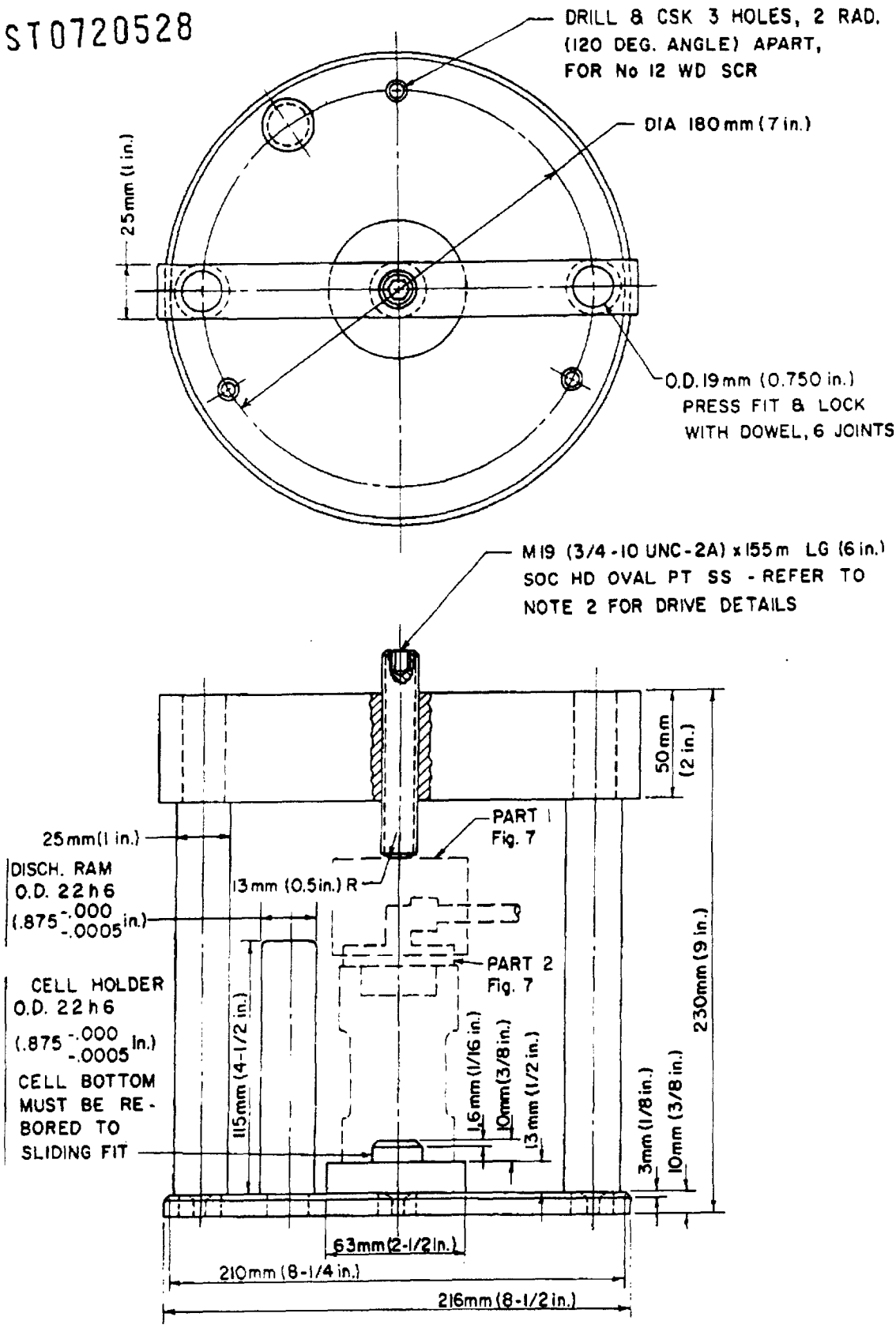

Fig.8- Cell Clamping Device

D-3/18

D
4

0528.A

Chrysotile Asbestos Test Manual

Third edition

ST0720529

D-4-73

COMPRESSIBILITY AND RECOVERY

Supersedes Method D-4 of the 1966 second edition

Revised and adopted by:

Asbestos Textile Institute - 27 May 1973

Quebec Asbestos Mining Association - ...

Printed in USA

ST0720530

Method for

COMPRESSIBILITY AND RECOVERY[1]

Designation D-4-73

1. Scope

1.1 This method of test covers the determination of the bulking factor of spinning grade fibre.

1.2 Results obtained on other grades may be used as an evaluation of bulk fibre resilience.

2. Applicable Documents

2.1 ASTM Standard:

E 177 Recommended Practice for Use of the Terms Precision and Accuracy as Applied to Measurement of a Property of a Material[2].

2.2 Standards published in the Chrysotile Asbestos Test Manual, third edition:

A-1 Sampling Asbestos for Testing[3].

A-2 Definitions of Terms Relating to Asbestos[3].

3. Summary of Method

3.1 The height of a weighed specimen is determined under a heavy ram in a graduated cylinder. The ram is then removed and the height of the specimen is again measured. Measurements are repeated until no change is noted in readings.

3.2 The heights of the specimen under pressure, and after pressure release, are termed 'compression' and 'recovery' respectively. The percentage difference is reported as 'percent recovery'.

4. Significance

4.1 The value of compression is proportional to the bulk under moderate pressure.

4.2 The value of percent recovery is a measure of springiness or bulk fibre resilience.

5. Definitions

5.1 Refer to 3.2 and to Definitions A-2[3].

6. Apparatus

6.1 Graduated cylinder and weighted ram as described in Fig. 1.

Note 1 - The scale may be calibrated in metric units.

7. Sampling

7.1 In accordance with method A-1[3].

7.2 Take two specimens of 113.4 ± 0.1 g (4 ± 0.005 oz) each.

8. Procedure

8.1 Pour a specimen into the graduated cylinder.

Note 2 - It may be advantageous to use a wide-mouth funnel for pouring the specimen.

Note 3 - It may be necessary to obstruct the observation slot in the wall of the graduated cylinder while pouring in the shorter fibered, and the more free-flowing grades of asbestos, to prevent specimen loss. This may be done by wedging a wooden rod of appropriate thickness and length, into the slot. Take care that the obstruction does not project inside the cylinder.

8.2 Fit the ram and cap assembly into position and allow the ram to compress the specimen for 60 s (1 min.).

8.3 If the observation slot was obstructed during specimen admission, remove the obstruction. Note the height of the specimen at the end of the 60 s dwell period in millimeters to ± 0.5 mm, or in inches to ± 1/64 in.

Note 4 - It is permissible at this point in the procedure to

insert a thin pointer, such as a needle, through the observation slot, and to let this rest atop the asbestos surface to facilitate reading the scale with precision.

8.4 Upon removal of the ram, the height of the specimen may change. Note this new height, to the same precision.

8.5 Repeat the compression cycle until free measurements, and measurements under pressure become constant. Record these measurements as recovery and compression, respectively.

8.6 Repeat 8.1 to 8.5 for the second specimen.

9. Calculation

9.1 Calculate percent recovery as follows:

Percent recovery = (Recovery - Compression) x 100/Compression

9.2 Calculate the average compression and the average percent recovery for both specimens and determine the deviation from the average in each case. If the deviation exceeds 5 percent from the average for either determination, then test additional specimens until two specimens can meet these criteria, and accept only the latter.

10. Report

10.1 Fully identify the sample as to designation and origin.

10.2 Report average compression for the two acceptable specimens in millimeters to ± 0.5 mm, or in inches to ± 1/64 in.

10.3 Report percent recovery to ± 0.5%.

11. Precision and Accuracy

11.1 Precision

11.1.1 Based upon a study carried out in 1972 at one laboratory on spinning grades only, the following measures of precision were established, as defined in Recommended Practice E 177[2].

11.1.1.1 Repeatability, meaning single-laboratory-apparatus multi-operator-day precision, was established at 28.1% (relative difference two-sigma limits in percent) (RD2S%) for percent recovery over the range from 8 to 14 percent recovery.

11.1.1.2 Repeatability was 3.43% (relative difference two-sigma limits in percent) (RD 2S%) for compression over the range from 79 to 104 mm (3-6/64 to 4-7/64 in.) of compression.

12. Accuracy

12.1 No justifiable statement on the accuracy can be made since the true values cannot be established by an accepted referee method.

ST0720534

FOOTNOTES

1. Supersedes designation D-4 of the 1966 second edition. Dates of approval or latest revision: Asbestos Textile Institute, adopted 27 May 1973, latest editorial revision 28 Feb 1974; Quebec Asbestos Mining Association, latest editorial revision 14 Mar 1974.

2. Annual book of ASTM Standards, Part 41.

3. Appears in Chrysotile Asbestos Test Manual, third edition, available from the Quebec Asbestos Mining Association, 580 Grande Allée East, Suite 320, Quebec, P.Q., Canada, G1R 2K2.

ST0720535

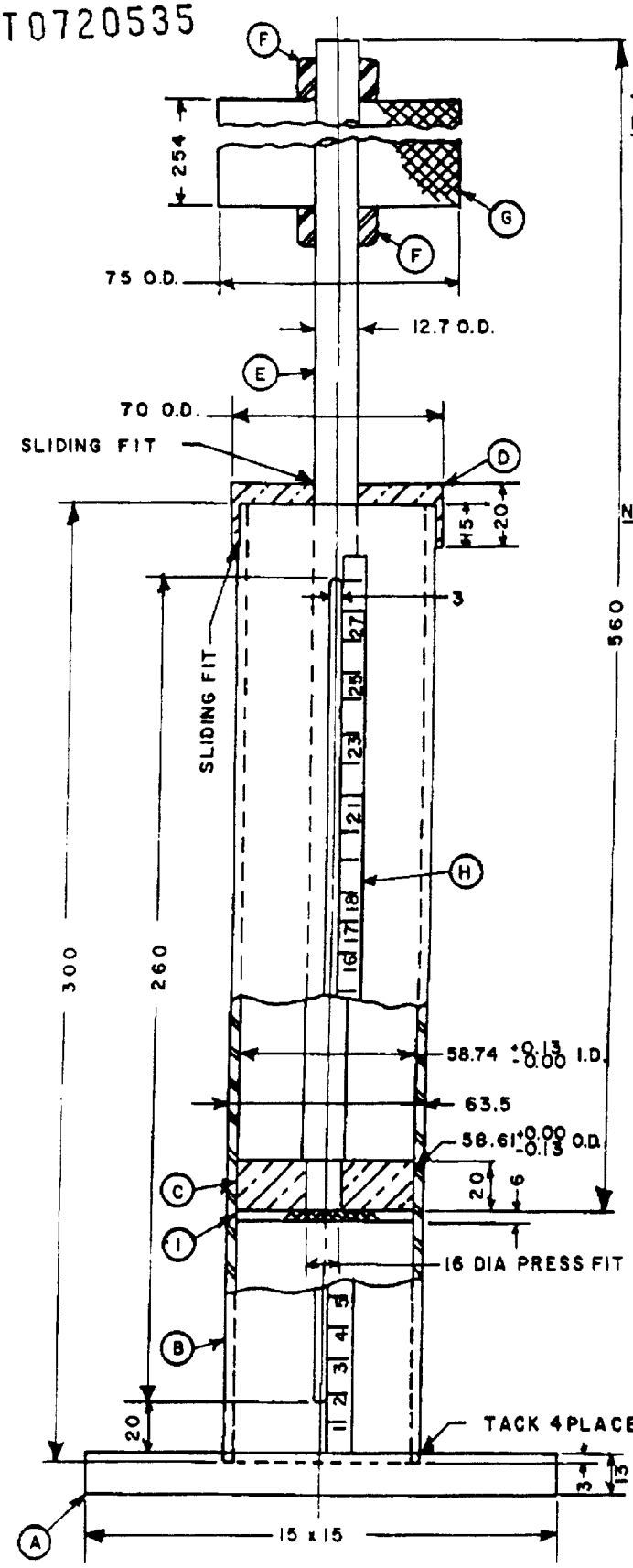

LEGEND

PC.	NAME	MAT'L
A	BASE	C.R.S.
B	CYLINDER	ST'L. T'B'G
C	PLUNGER	BRONZE
D	CAP	BRONZE
E	ROD	C.R.S.
F	S.S. COLLAR	ST'L
G	WEIGHT	LEAD (12.7 kg)
H	SCALE	1mm OR 1/64 In. DIV
I	DISC	C.R.S.

NOTES:

1- TOTAL WEIGHT OF PCS (C) (E) (F) (G) & (I) TO BE 13.6 kg

2- PART (B) MUST BE CHROME PLATED INSIDE

3- ALL DIMENSIONS IN mm

Fig. 1- Compressibility and Recovery Apparatus D-4/7

D
5

0535. A

Chrysotile Asbestos Test Manual

Third edition

ST0720536

D-5-62

DRAINAGE RATE

Revised and adopted by:

Asbestos Textile Institute - ...

Quebec Asbestos Mining Association - 16 Jan. 1962

Printed in USA

ST0720537

D-5

DRAINAGE RATE

Scope

1. This procedure is for determining the water drainage rate from an asbestos slurry using a commercial Sheet Mould.

   Note 1: The drainage rate is understood as the speed with which the water is removed (drained) from a water-asbestos slurry.

   Re: Merriam-Webster Dictionary - To drain = to draw off
   To filter = to pass through a filter

Apparatus

2. (a) Sheet Mould - Valley Iron Works square model 8 x 8 inch with a water leg provided with a brass reduction piece screwed in after the gate valve and having an orifice of exactly 3/8 inch (0.375 inch) or an overflow box to prevent the gulping of the air by the "water leg."

   The distance between the facing wire and the water leg valve should be 40-7/16 inchs.

   (b) Facing wire 100 x 100 phos. bronze, 0.004 inch.

   (c) Three 1000 ml graduate cylinders.

   (d) Two 2000 ml beakers.

   (e) Two 400 ml beakers.

   (f) A mechanically driven inverter* capable of rotating a 1000 ml graduate cylinder at 30 rpm with the axis of rotation bisecting the axis of the cylinder at right angles.

   *Note 2: See QAMA Test Methods and Procedures and/or (D-1) "Wet Volume Test."

   (g) Two clean pails (capacity two gallons).

   (h) Balance - accurate to 0.1 gram.

(i) Supply of distilled water at 22° ± 1°C.

Sampling

3. (a) In accordance with (A-1) "Method of Sampling and Preparation."

Procedure

4. (a) Weigh two 60.0 gm samples of fibre into two 400 ml beakers.

(b) Fill three 1000 ml graduates with distilled water at 22° ± 1°C.

(c) Transfer the weighed 60 gm sample into a 2000 cc beaker, add to it 1000 ml of distilled water from the first graduate and transfer the slurry back into the same graduate.

(d) Place the graduate with the slurry into the inverter. Revolve the graduate exactly 30 times in one minute (30 rpm).

(e) Fill the sheet mould with tap water exactly to the facing wire level, wipe off any excess of water with a rubber wiper. Make sure that the air entrapped under the facing wire is removed.

(f) Remove the graduate from the inverter, transfer the slurry into a clean pail, rinse the graduate, and the 2000 ml beaker with 1000 ml of water into the same pail.

(g) In order to secure a good mixing of the water-asbestos slurry, transfer it five times from pail to pail.

(h) Immediately pour remaining 1000 ml of distilled water into sheet mould, and then the 2000 ml slurry from the pail.

(i) Immediately open the draining gate valve and start the timer.

(j) Stop the timer when at least 95 per cent of the formed sheet loses its shiny aspect.

Results and Accuracy

5. (a) The average of two results is reported in seconds as a measure of the drainage rate.

(b) The expected maximum difference between any individual reading and the average is ± 5 per cent, but not to exceed 10 seconds.

ST0720539

Care of the Sheet Mould

6. (a) Check before every test if the screen is thoroughly clean. After each test open the water inlet valve slightly and clean the facing screen with a long-haired brush. Be careful not to damage the screen.

(b) At the end of each series of tests close the box and wash the screen with a strong spray of water. Keep the water leg valve slightly open, and when the screen is washed, close the water leg valve, open the inlet valve and brush off fibre remaining on the facing wire. The screen shall be without white spots caused by fines blocking screen openings.

Notes on adapting this test to other models and makes of Sheet Mould:

Note 1: The present procedure may be adapted for other models and makes of commercially available Sheet Moulds.

Note 2: This procedure has been adapted and correlated for Williams 12 inch x 12 inch Sheet Mould.

The size of the sample and the amount of distilled water to be used in the Williams 12 inch x 12 inch Sheet Mould were established as follows:

(a) The true dimensions of the Valley Iron Works Sheet Mould are 8.5 inches x 8.5 inches

Screen area 8.5 inches x 8.5 inches = 72.25 sq. inches

Amount of fibre deposited per one sq. inch:

$$60.0 \text{ gms} = 0.83 \text{ gms per sq. inch}$$

The consistency of the asbestos water slurry is:

$$\frac{60.0 \times 100}{3000} = 2 \text{ per cent}$$

(b) Corresponding values for the Williams 12 inch x 12 inch Sheet Mould:

Sample size: $0.83 \times 144 = 119.5$ gm or 120.0 gms

Amount of distilled water:

$$\frac{120.0 \times 100}{2} = 6000 \text{ ml}$$

D
6

0539.A

Chrysotile Asbestos Test Manual

Third edition

ST0720540

D-6-72

LOOSE DENSITY

Supersedes Method D-6 of the 1966 second edition

Revised and adopted by:

Asbestos Textile Institute - ...

Quebec Asbestos Mining Association - 6 Oct 1972

Printed in USA

ST0720541

Method for

LOOSE DENSITY[1]

Designation D-6-72

1. Scope

1.1 This method covers the determination of the loose density of asbestos fibre for Groups 5 to 9 inclusive[4].

2. Summary of Method

2.1 The method consists of measuring the weight of 1770 cm^3 (1/16 ft^3) volume of asbestos fibre, and of computing the loose density in kg/m^3, or lb/ft^3.

3. Significance

3.1 Loose density gives an indication of the degree of fiberization, and loftiness of asbestos fibre.

4. Definition or Description of Terms

4.1 Refer to Definitions A-2[2].

5. Apparatus

5.1 Container, 1770 cm^3 (1/16 ft^3) in volume made of plastic tubing 12.7 cm (5 in.) inner diameter, with 6 mm (0.25 in.) thick walls and 13.4 cm (5.5 in.) internal height (commercially available tubing).

5.2 Scoop capable of holding 1.5 times the volume of the container.

5.3 Straight edged spatula or ruler.

6. Sampling

6.1 In accordance with Method A-1[2].

6.2 The test specimen must exceed the volume of the container by approximately 50 percent.

6.3 Two specimens are required.

7. Procedure

7.1 Place the specimen in the scoop and hold the latter 80 to 100 mm (3 to 4 in.) above the container.

7.2 Pour the specimen into the container using a continuous shaking motion and fill the container to overflowing.

7.3 Using the spatula, or a ruler, immediately level off the fibre to the top of the container. Do this in several passes to avoid compressing the fibre.

7.4 Determine the weight in ounces (one ounce = 28.35 g) of fibre contained in the measure to the nearest 2 g (0.1 oz). The weight in ounces is equivalent to the loose density in lb/ft^3.

7.5 Repeat the procedure on the other specimen.

8. Calculation

8.1 Average the results of two specimens.

8.2 If equivalent metric units are desired, multiply results in lb/ft^3 by 16.03 to get kg/m^3.

9. Report

9.1 Report results in lb/ft^3, or kg/m^3.

10. Precision

10.1 The single-laboratory-apparatus multi-operator-day precision (repeatability) is ± 2 percent (two sigma limits expressed in units of percentage) (2S%) as defined in ASTM. Recommended Practice E 177[3] over the range of 160 to 1600 kg/m^3 (10 to 100 lb/ft^3).

ST0720543

FOOTNOTES

1. Supersedes designation D-6 in the 1966 second edition. Dates of adoption or latest revision: Asbestos Textile Institute, latest editorial revision, 28 Feb 1974; Quebec Asbestos Mining Association, adopted 6 Oct 1972, latest editorial revision, 14 Mar 1974.

2. Appears in the Chrysotile Asbestos Test Manual, third edition, available from Quebec Asbestos Mining Association, 580 Grande Allée, East, Suite 320, Quebec, P.Q., Canada, G1R 2K2.

3. Annual Book of ASTM Standards, Part 41.

4. Quebec Standard (Q.S.) designation of chrysotile asbestos grades.

Chrysotile Asbestos Test Manual

Third Edition

ST0720541

D-7-73

FREENESS

Supersedes Method D-7 of the 1966 second edition

Revised and adopted by:

Asbestos Textile Institute - ...

Quebec Asbestos Mining Association - 21 May 1973

Printed in USA

ST0720545

Method for

FREENESS[1]

Designation D-7-73

1. Scope

1.1 This method covers the measurement of the rate at which a water-asbestos slurry may be dewatered under standard conditions.

1.2 This procedure is applicable to Groups 4, 5, and 6, and to grade 7D fibres[2].

2. Applicable Documents

2.1 ASTM Standards:

D 1193 Specifications for Reagent Water[3].

E 11 Specifications for Sieves for Testing Purposes[4].

E 177 Use of the Terms Precision and Accuracy as Applied to Measurement of a Property of a Material[4].

2.2 Standards published in the Chrysotile Asbestos Test Manual, third edition[6]:

A-1 Sampling Asbestos for Testing[5].

A-2 Definitions of Terms Relating to Asbestos[5].

D-1 Test for Wet Volume of Asbestos[5].

2.3 Quebec Standard Designation of Chrysotile Asbestos Grades[6].

3. Summary of Method

3.1 A filter fitted with a 297 µm (U.S. No. 50) screen is calibrated by measuring the flow rate of water.

3.2 A slurry containing a test specimen, and water saturated with lime and gypsum, is mixed in a mechanical inverter.

3.3 The slurry is dewatered in the filter and the time

required for a fixed portion of the filtrate to free itself (the freeness) is measured.

4. Significance

4.1 The freeness is a measure of the dewatering characteristics of the asbestos under specified conditions of gravity flow and may or may not necessarily be related to the filtration performance of the same fibre in an industrial drainage process.

4.2 Freeness is related to the harshness of the fibre, to the degree of fiberization, and to the fines content.

5. Definitions

5.1 Refer to Definitions, A-2.

6. Apparatus

6.1 Filter, as described in Figs 1, 2, 3 and 4. The screen cloth must meet tolerances given in ASTM Specifications E 11.

6.1.1 Fit nozzle with flexible plastic tubing approximately 40 mm (1.5 in.) long, terminated in 0.5 rad (30 deg.) angle to lead the water to the cylinder wall thus reducing surface disturbances.

6.2 Mechanical inverter as described in Figs. 5 and 6. The apparatus described in Method D-1 is suitable. Refer to Note 4.

6.3 1000 cm^3 graduated cylinder as described in Fig. 7.

6.4 An optional electrical timer control[7] operating by means of electrodes in the cylinder receiving the filtrate, may be used to advantage to operate a timer.

6.5 The optional system for dispensing water, illustrated in Fig. 8, may be used to advantage. It is a time-saving system, ensuring constant precision of water volumes.

6.6 Optional volumetric flasks accurately calibrated as follows can improve precision:

6.6.1 For calibration; a flask graduated at the 150, 350, and 600 cm^3 marks may be used.

6.6.2 For testing; a flask graduated at the 50 and the 150

cm^3 marks can be used.

7. Reagents and Materials

7.1 Distilled water type IV as specified in ASTM Specifications D 1193.

7.2 Lime - Calcium Hydroxide ($Ca(OH)_2$) Reagent Grade.

7.3 Gypsum - Calcium Sulphate ($CaSO_4 \cdot 2H_2O$) Reagent Grade.

7.4 Saturated water

7.4.1 Saturated water is prepared by adding 2 kg (4.4 lb) of lime and 3 kg (6.6 lb) of gypsum per m^3 (264 U.S. gallons) of distilled water at 25 ± 1 °C(77 ± 2 °F) Smaller volumes may be prepared providing these proportions are maintained. Agitate the mixture well, allow to settle for at least 24 h, then siphon off the clear water into a clean container for future use.

8. Sampling

8.1 In accordance with Method A-1.

8.2 Take three specimens of 10 ± 0.05 g each.

9. Calibration

9.1 Clamp the filter in its holder, close the stopcock then pour 650 cm^3 of saturated water at 25 ± 1 °C (77 ± 2 °F) into the filter.

Note 1 - Freeness results are temperature dependent as illustrated by the graphs on Fig. 9. Therefore these tests should be carried out in a temperature-controlled room at normal room temperature {close to 25 °C (77 °F)}.

9.2 Open the stopcock and allow to drain into a 1000 cm^3 graduated cylinder (or calibrated volumetric flask, optional). Measure the time in seconds to fill the graduated cylinder from the 150 cm^3 to the 350 cm^3 mark. Continue to drain until the water level reaches the 600 cm^3 mark in the graduated cylinder then close the stopcock.

Note 2 - The 50 cm^3 of water is left in the filter to reduce the possibility of trapping air bubbles beneath the screen when the filter is filled for the succeeding test. Air trapped beneath the screen can adversely affect test results and

reproducibility.

9.3 The time measured in 9.2 must be 8 ± 1.5 s. The allowable variation for a single apparatus is 1 s. A greater deviation may indicate fouling of the stopcock or of the screen, excessive sag of the screen, leaks in the gaskets or in the stopcock, or air trapped beneath the screen. Care should also be taken that the stopcock is fully open during the draining operation.

9.4 Calibration should be carried out whenever it is desired to verify the equipment.

9.5 Cleaning. Remove any mineral deposits from the plastic cylinder of the filter with a weak acid (such as HCl) solution, and remove deposits from the screen by scrubbing with a stiff bristle brush prior to calibration.

Note 3 - In laboratories performing a limited amount of testing, it is advisable to leave the filter cleaned and empty when not in use and to begin each test series with apparatus calibration.

10. Procedure

10.1 Place an empty 250 cm^3 graduated cylinder (or optional volumetric flask) beneath the filter to receive the drainage.

10.2 Pour 500 cm^3 of saturated water described in 7.4 at 25 ± 1°C(77 ± 2°F)into a 1000 cm^3 graduated cylinder described in 6.3 then add a test specimen.

10.3 Clamp the graduated cylinder onto the mechanical inverter.

Note 4 - Mechanical inverters used for Method D-1 are designed for use with a two-liter cylinder. Accordingly, spacers may be used to accomodate the 1000 cm^3 cylinder used in this method, and these spacers should be chosen such that the cylinder will rotate about the middle of its total internal height.

10.4 Rotate the cylinder through 30 full revolutions in 1 min. Then <u>immediately</u> remove the cylinder from the inverter and in one continous motion quickly pour the slurry into the filter.

10.5 Then open the stopcock.

10.6 Start timing when 50 cm^3 has drained and measure the time interval to drain 100 cm^3 from the filter or to reach the 150 cm^3 mark in the graduated cylinder. Note the time to 1 s.

10.7 Wash out the apparatus for subsequent tests, making

sure that the screen and the plastic cylinder are clean.

10.8 Clamp the filter in its holder, close the stopcock then pour 650 cm^3 of saturated water at 25 ± 1 °C(77 ± 2 °F)into the filter.

10.9 Open the stopcock and allow 600 cm^3 to drain into a 1000 cm^3 graduated cylinder leaving 50 cm^3 in the filter. Refer to Note 2.

Note 5 - The 600 cm^3 of saturated water so collected may be re-used to perform the subsequent test or returned to the main saturated water supply for future use.

10.10 Repeat the procedure 10.1 to 10.9 for the other two specimens. If the maximum difference between any individual specimen and the average exceeds ± 5 percent, or ± 10 s, test additional specimens until these criteria can be met for three specimens and accept only the latter. If three acceptable results cannot be obtained, calculate the average of the three most consistent results and so report.

11. Report

11.1 Report the average freeness for the three acceptable specimens to the nearest second.

12. Precision

12.1 Repeatability[8], meaning single-laboratory-apparatus multi-operator-day precision, was established at 12.3% (relative difference two-sigma limits in percent) (RD 2S%), over the range from 36 to 540 s.

ST0720550

FOOTNOTES

1. Supersedes designation D-7 of the 1966 second edition. Dates of approval or latest revision: Asbestos Textile Institute, latest editorial revision 28 Feb 1974; Quebec Asbestos Mining Association, adopted 21 May 1973, latest editorial revision 14 Mar 1974.

2. Quebec Standard (Q.S.) designation of chrysotile asbestos grades.

3. Annual Book of ASTM Standards, Part 31.

4. Annual Book of ASTM Standards, Part 41.

5. Published in the third edition of Chrysotile Asbestos Test Manual[6].

6. Available from the Quebec Mining Association, 580 Grande Allée East, Suite 320, Quebec, P.Q., Canada, G1R 2K2.

7. Details of this electrical apparatus are available from the Director, QAMA Testing Research Laboratory, University of Sherbrooke, Sherbrooke, P.Q., Canada, J1K 2R1.

8. As defined in ASTM Recommended Practice E 177[4].

ST0720551

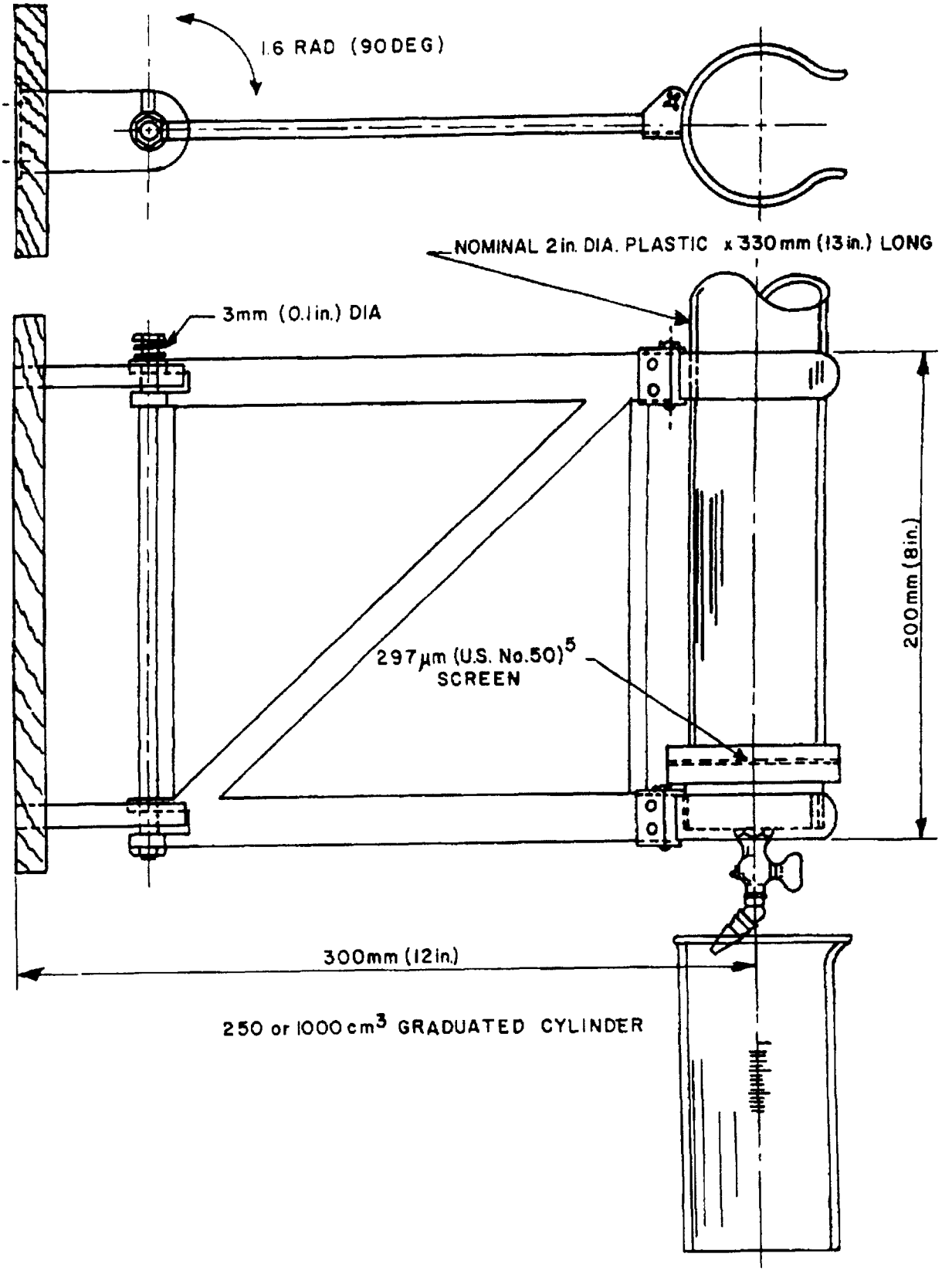

Fig.1- Freeness Apparatus

ST0720552

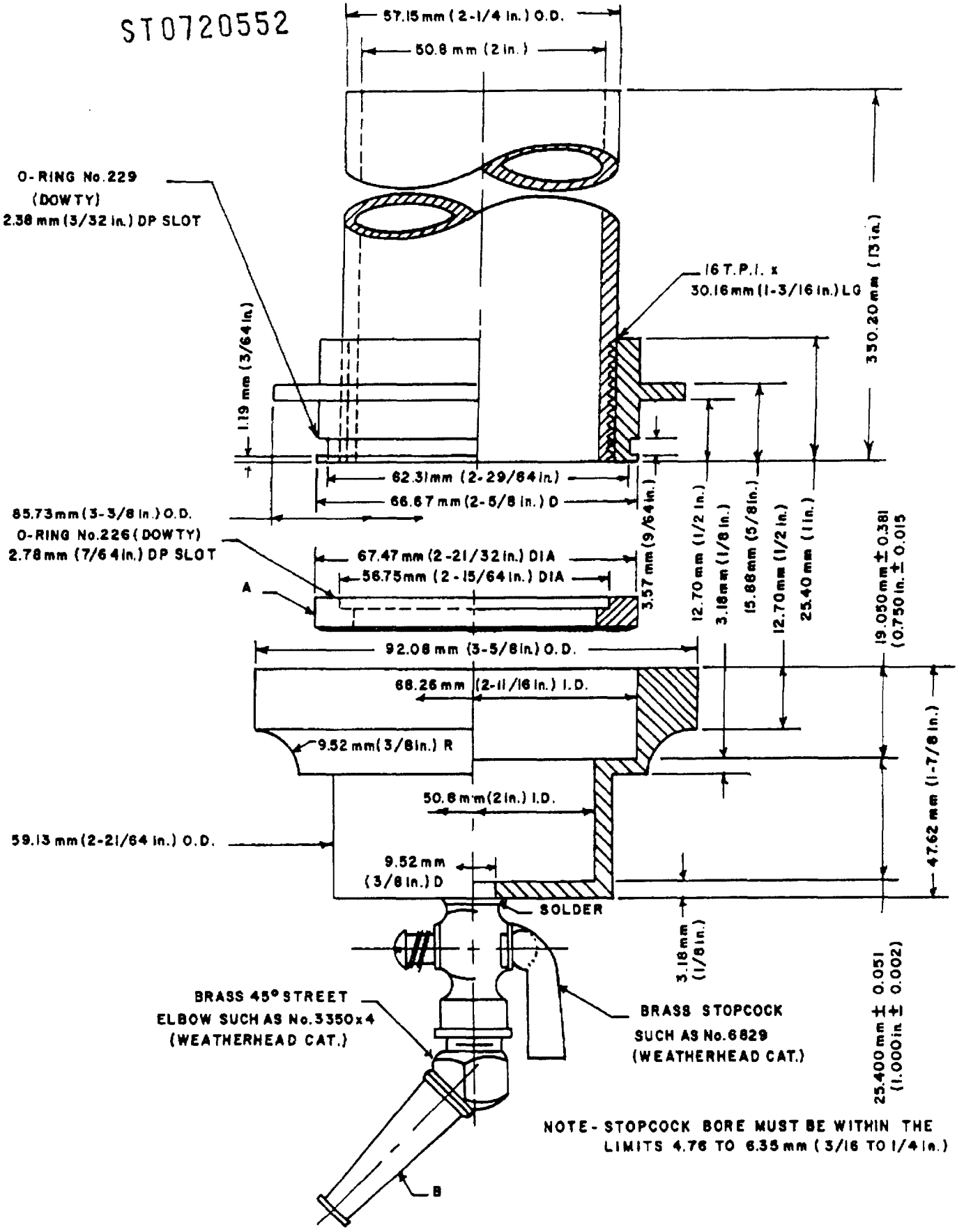

Fig.2 - Freeness Filter Assembly

D-7/9
(REVISED 1976)

ST0720553

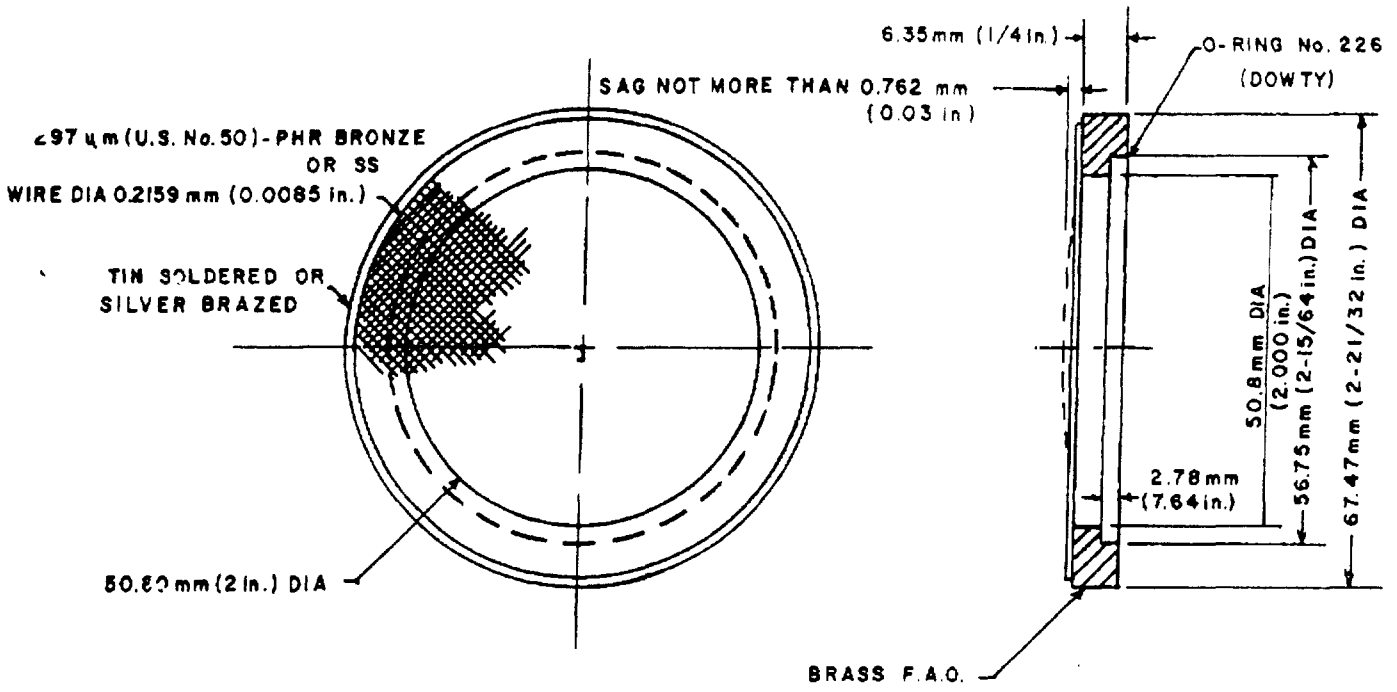

PART A - SCREEN ONE REQ'D

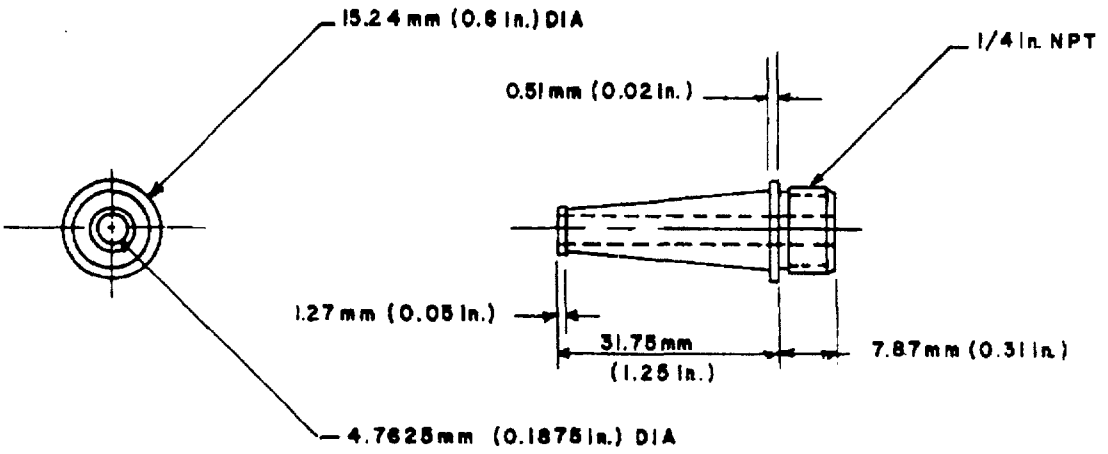

PART B - NOZZLE ONE REQ'D

Fig. 3 - Freeness Filter Details

D-7/10
(REVISED 1976)

ST0720554

Figure 4, "Additional Freeness Filter Details", has been deleted, since the redesigned freeness filter (shown in Figure 2, D-7/9) does not require clamps.

ST0720555

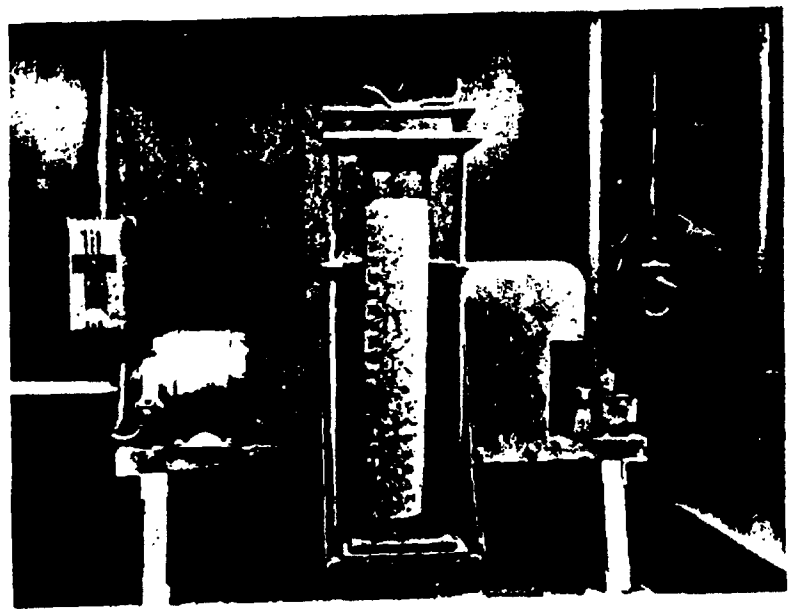

Fig. 5 - Mechanically Driven Inverter

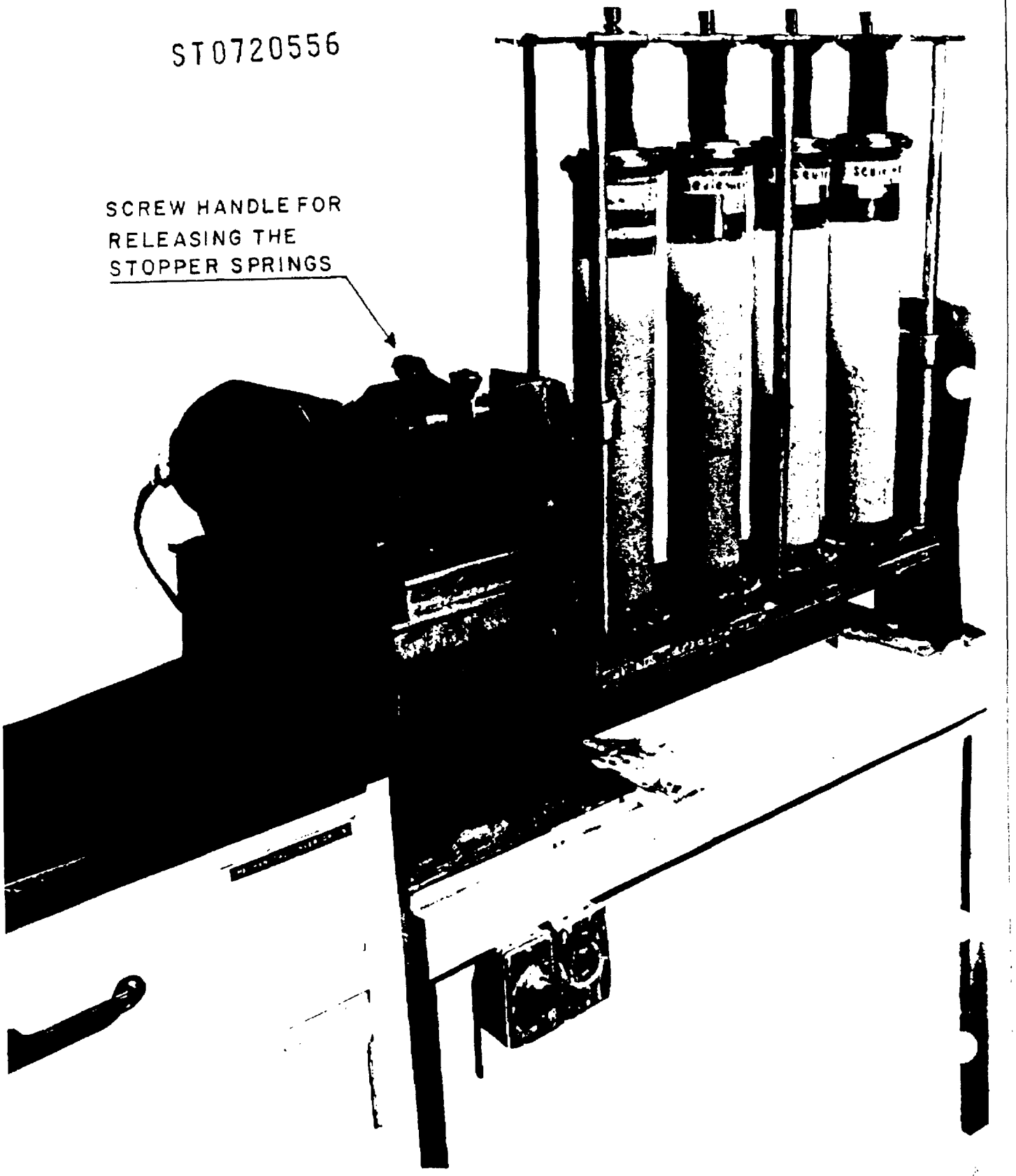

Fig·6 - Alternative Design of Mechanically Driven Inverter

ST0720557

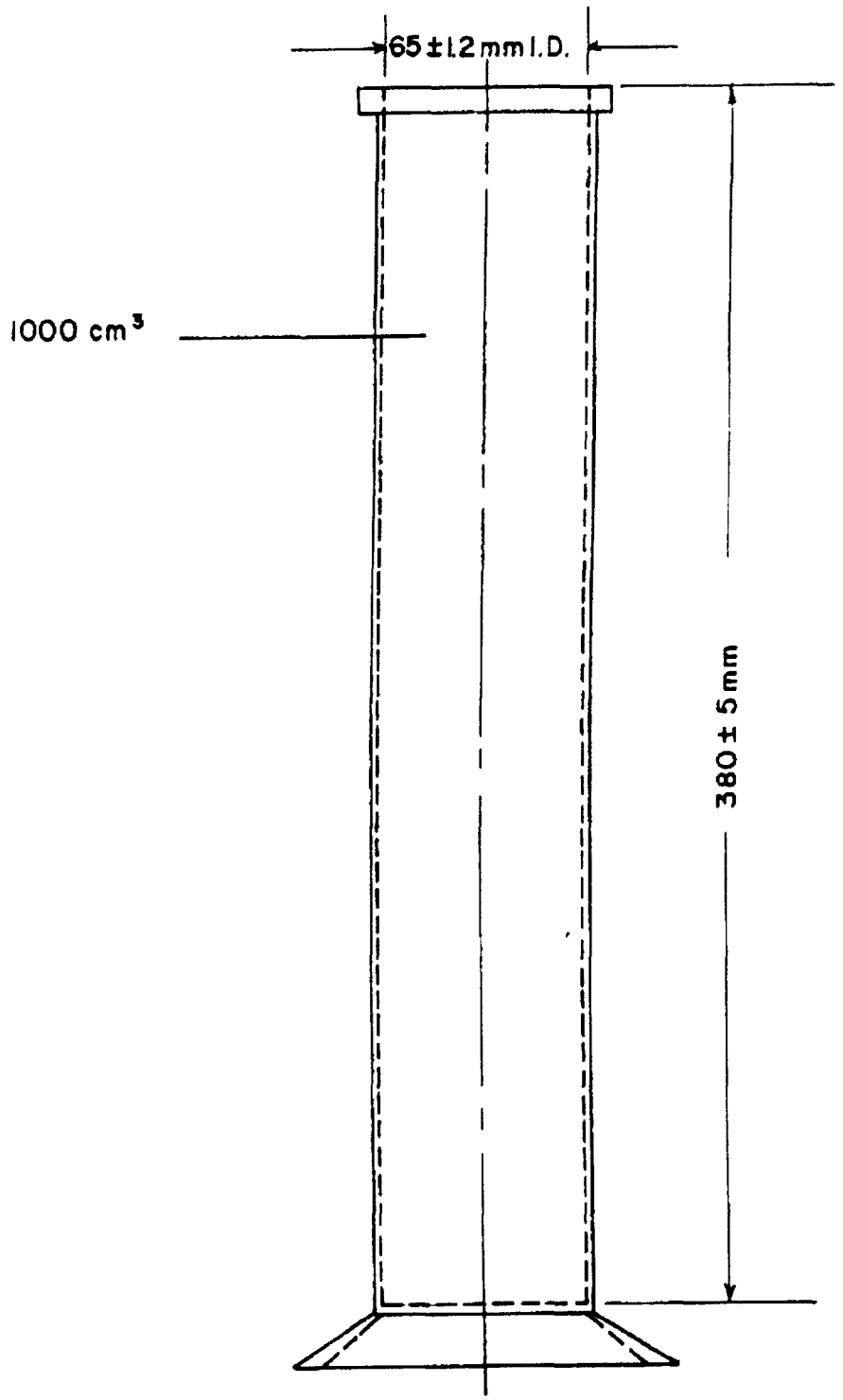

Fig. 7- Graduated Cylinder

D-7/14
(REVISED 1976)

ST0720558

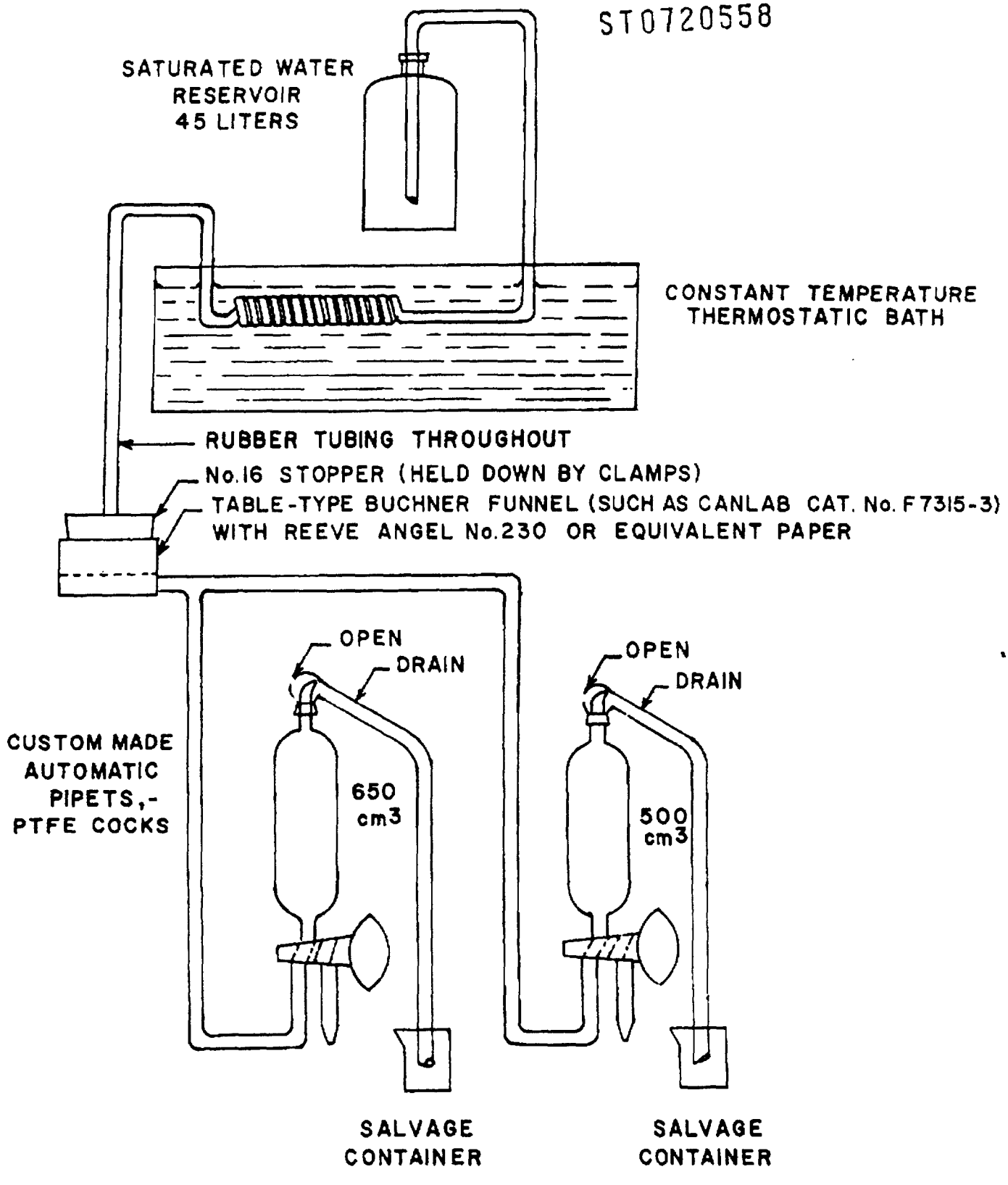

Fig. 8 - Optional Automatic Water Dispensing System

D-7/15

ST0720559

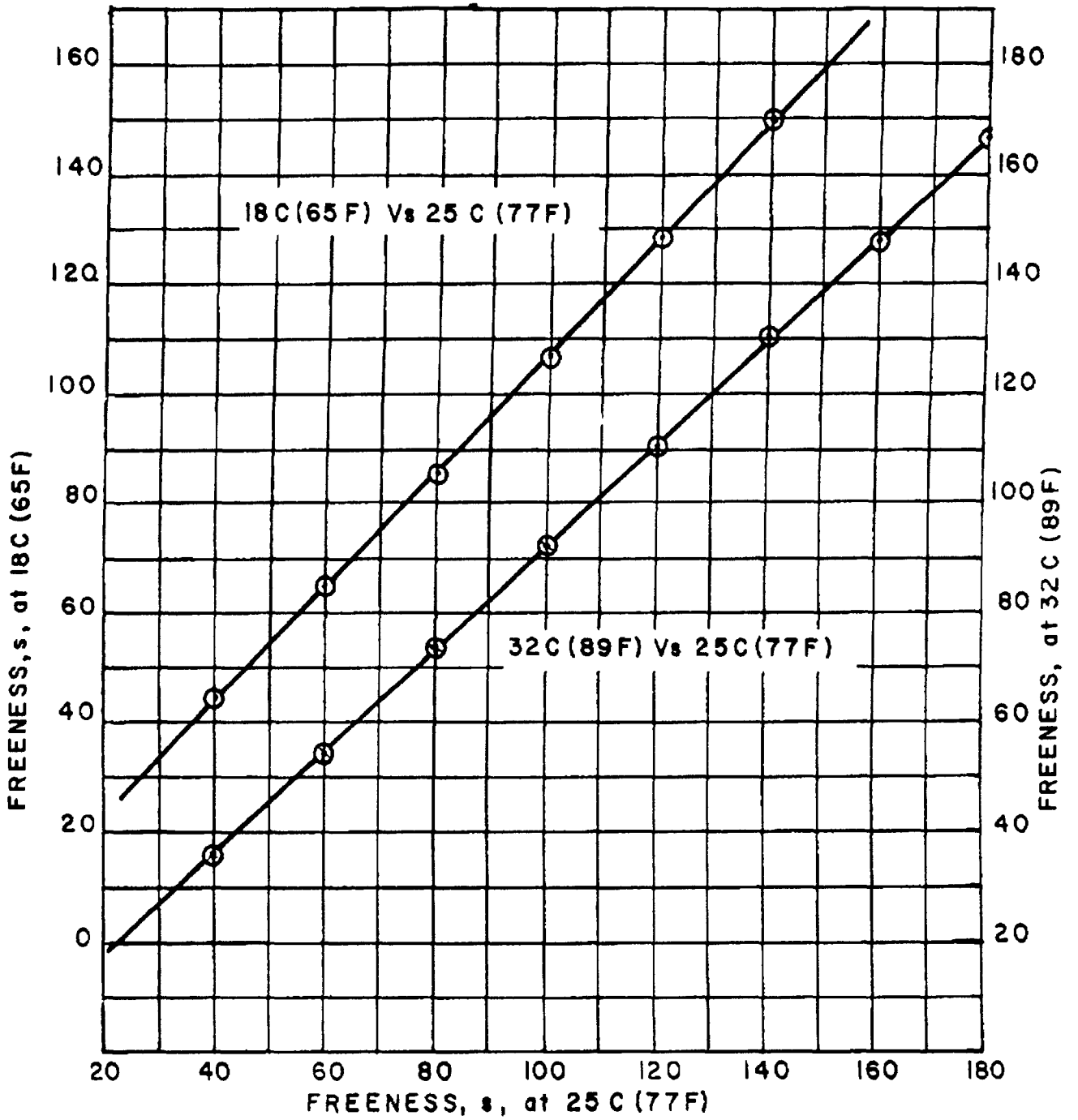

Fig.9 - Freeness Results at 25 C (77F) Versus 18 C (65F) and 32 C (89F)

D-7/16

E
1

Chrysotile Asbestos Test Manual

Third edition

ST0720560

E-1-61

CRUDY CONTENT

Revised and adopted by:

Asbestos Textile Institute - ...

Quebec Asbestos Mining Association - 20 Jun 1961

Printed in USA

ST0720561

E-1

CRUDY CONTENT TEST

Scope

1. (a) This test is to measure by water elutriation a residue of material that indicates the crudiness and/or grit content in milled fibre.

   (b) The limitation of this test is for Q. S. grades of 4D to 7F inclusive.

Apparatus

2. (a) The apparatus as described by the drawings No. A and B.

   (b) Stop Watch.

   (c) 1000 cc beaker.

   (d) Waring blender Model No. 702 CR-W.

   (e) A balance to weigh 10 grams to an accuracy of ± 0.01 gm.

   (f) A Buchner funnel and filter or 200 mesh Tyler sieve.

   (g) Drying oven or infra-red lamp units.

Procedure

3. (a) Sample Preparation - In accordance with the "Method of Sampling and Preparing Asbestos Fibre for Testing" a laboratory sample will be taken.

   The test specimen will be selected from the above mentioned sample as follows:

   (1) Spread the sample on a smooth working surface by layers to form a flat pile approximately 1/2-in. thick and quarter.

   (2) Spread the reduced sample again and select 10 grams by taking pinches from different sections in the pile until the specimen is obtained which will require minimum adjustment to obtain the desired weight (10 grams ± 0.01 gms).

Note: Special attention must be made to ensure that each pinch of fibre picks up the full cross-section of the pile, including any grit or fines which may have segregated to the bottom.

(3) Two determinations of crudy content must be made on distinct samples thus obtained from the laboratory sample. The two results should then be averaged. (See Accuracy).

(b) Fill tube to half its height with water.

(c) Add the sample to the column from the top as a slurry in 200-400 cc of water.

(d) Bubble air through the sample for one minute to give thorough mixing.

Note: Ensure that no loss of sample takes place.

(e) Reduce the air rate to approximately 50 cc/min. and turn on the water to a 3500 cc/min. rate.

(f) After nine minutes turn off the air bubbles completely and increase the water rate to 5400 cc/min.

(g) After five minutes shut off the water.

(h) Pinch the inlet tubing, remove from the water air-line, and drain the collected crude into the beaker. The first two liters of water usually contain all the crude and the remainder of the water may be discarded.

(i) Wash down the lower end of the tube by squirting water into the inlet tube for a moment and add this to the beaker.

(j) Filter, dry, and weigh the crude and grit.

(k) If it is so desired, the grit content may be measured as follows:

Place the weighed material in a Waring blender with about 250cc of water and beat for one minute until the crude is pulpy and well fiberized.

Wash the material into a large beaker of warm (but not boiled) water, stir well and decant the fibre away from the grit.

Filter, dry, and weigh the grit (it may be necessary to hand-pick and discard some unfiberized crude).

Subtract from the previous total Paragraph 3 (j) to obtain per cent crude.

ST0720563

Results and Accuracy

4. (a) The weighed residue described under "Procedure" paragraph 3 (j) is reported as the percentage of grit and crude. The average of two results must be reported.

(b) The weighed residue as described under "Procedure" paragraph 3 (k) is reported as the percentage of crude. The average of two results must be reported.

(c) The expected maximum difference between any individual readings and the average is ±3 per cent. When the maximum difference is exceeded, repeat the test.

ST0720564

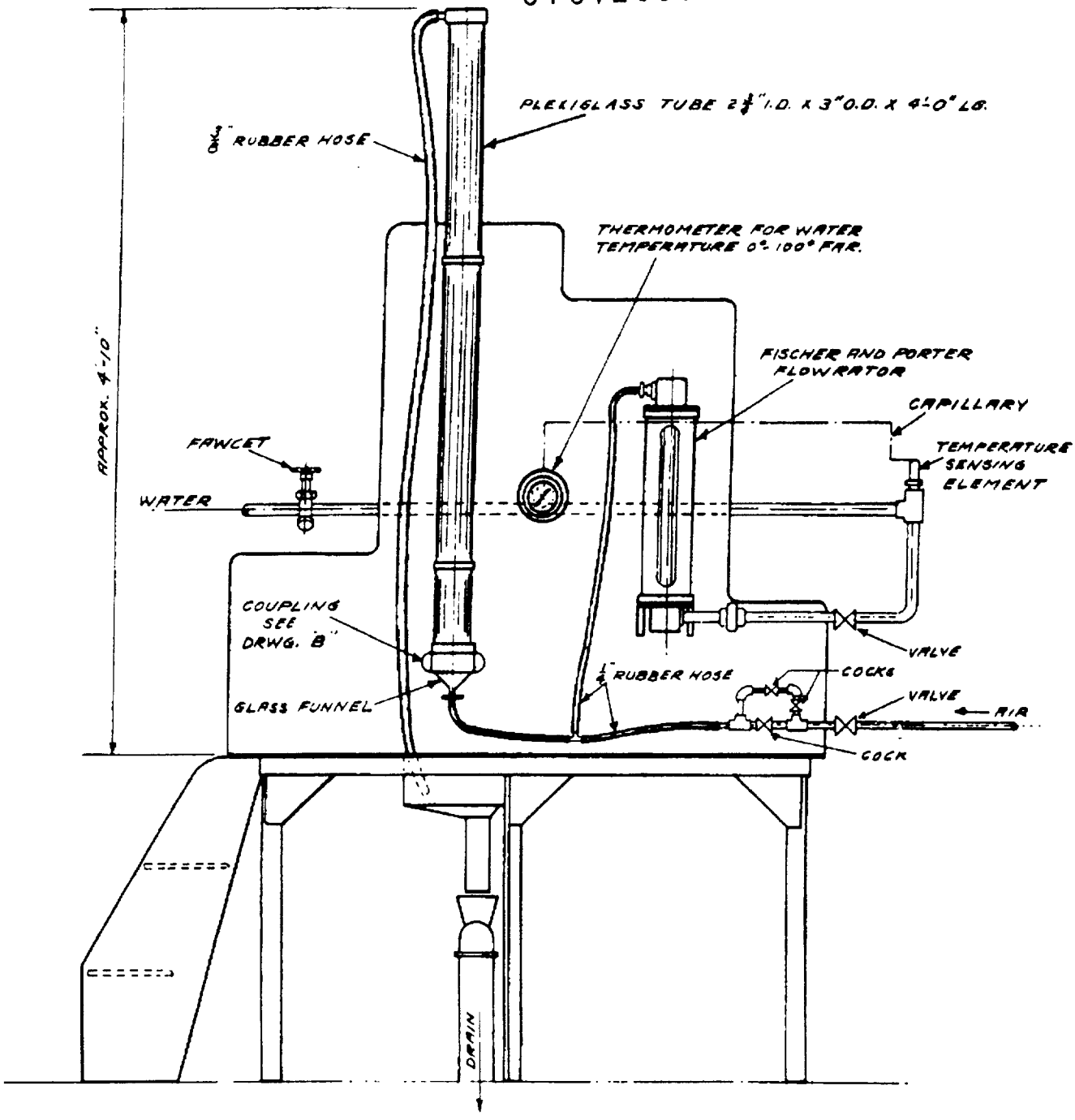

CRUDY CONTENT APPARATUS
DRAWING "A"

ST0720565

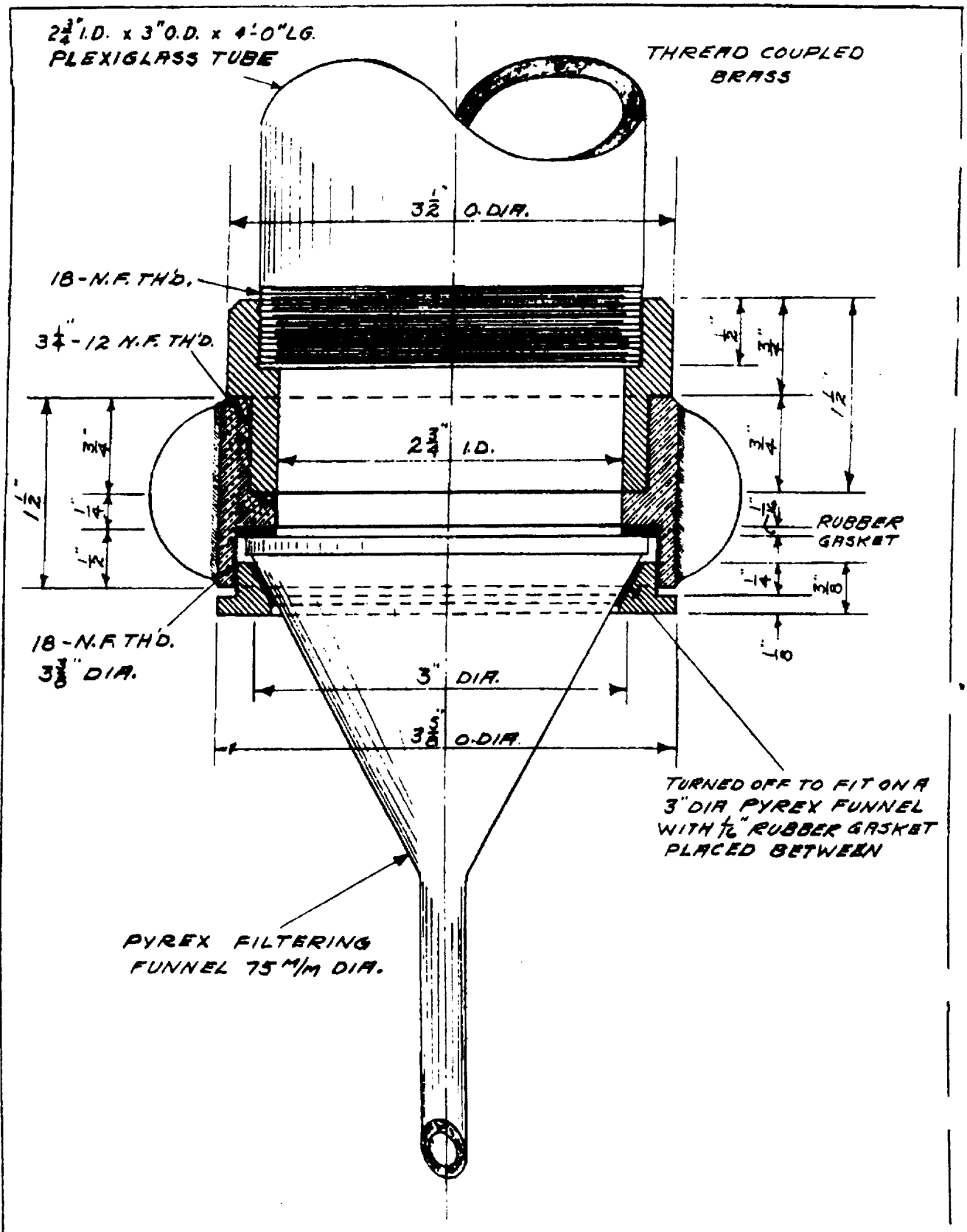

CRUDY CONTENT APPARATUS-COUPLING DRAWING "B"

E
2

0565.A

Chrysotile Asbestos Test Manual

Third edition

ST0720566

E-2-63

GRIT AND SPICULE

Revised and adopted by:

Asbestos Textile Institute - ...

Quebec Asbestos Mining Association - 19 Nov 1963

Printed in USA

ST0720567

E-2

GRIT AND SPICULE TEST

Scope

1. (a) This test is to measure by water elutriation a residue of material that indicates the grit and spicule content in milled fibre.

   (b) The limitations of this test is for Quebec Standard grades 7H and below.

Apparatus

2. (a) Elutriation apparatus as described on drawings:

   No. L-572-A, General Arrangement
   No. L-572-B, Detail Separating Vessel
   No. L-572-C, Detail of Water Spray Tube

   (b) Fibre washing apparatus as described on drawings:

   No. L-551-1, General Arrangement
   No. L-602, Detail of Spray

   (c) Timer or Stop Watch.

   (d) Buchner Filter and filter paper. (Reeves Angel 230).

   (e) Drying oven or infra-red lamp drying units.

   (f) 35-mesh standard Tyler 8-in. sieve.

   (g) 100-mesh standard Tyler 8-in. sieve.

Sampling

3. (a) In accordance with (A-1) "Method of Sampling and Preparation," to obtain 100-gram sample.

   (b) Perform Grit and Spicule tests on triplicate samples obtained by the standard sampling procedure and average the results.

Note: Special attention must be made to ensure that each increment of fibre for the sample includes the full cross-section of the pile with any grit or fines which may have segregated to the bottom.

Procedure

4. (a) A test sample of 100 grams of fibre is ro-tapped by the standard procedure (B-2) "Ro-Tap Screen Analysis."

(b) The plus 35 mesh fraction is washed in several increments of 10 to 15 grams on 35 mesh sieve with a water spray at 20 lbs/sq. in., for 3 minutes.

The minus 35 mesh fraction is washed on 100 mesh sieve with the same spray and pressure for 3 minutes.

Note: All other techniques are outlined in wash test procedure (C-4) "Wash Test."

(c) Transfer the plus 35 mesh fraction after washing to the 4-in. diameter separating vessel.

(d) Connect to the water supply the copper spray tube so that it hangs freely in the center and the end has a half-in. clearance with the bottom of the vessel.

Note: Check the spray tube to ensure that openings are clear.

(e) Introduce the water to the separating vessel at a flow rate of 1575 cc/min.

(f) Allow the water to run for 30 minutes.

(g) After shutting off the water allow the residue to settle for 2 minutes and then decant off half the water.

(h) Pour the remaining water and residue into a Buchner funnel, making sure that the separating vessel is well washed out, and filter on a previously dried and weighed filter paper.

(i) The filtered residue from the separating vessel is then dried and weighed.

(j) The weight of the filter paper is subtracted from the weight of the filter paper plus residue to obtain the per cent of residue in the plus 35 mesh fraction.

(k) The above procedure, as per paragraphs 4 (c) to 4 (j) is followed for the minus 35 mesh ro-tap fraction after washing on

the 100 mesh to obtain the per cent of residue in the minus 35 mesh fraction.

Results

5. (a) The total percentage of residue will be reported as three test results and their average.

This percentage is an indication of the grit and spicule content of the sample tested.

ST0720570

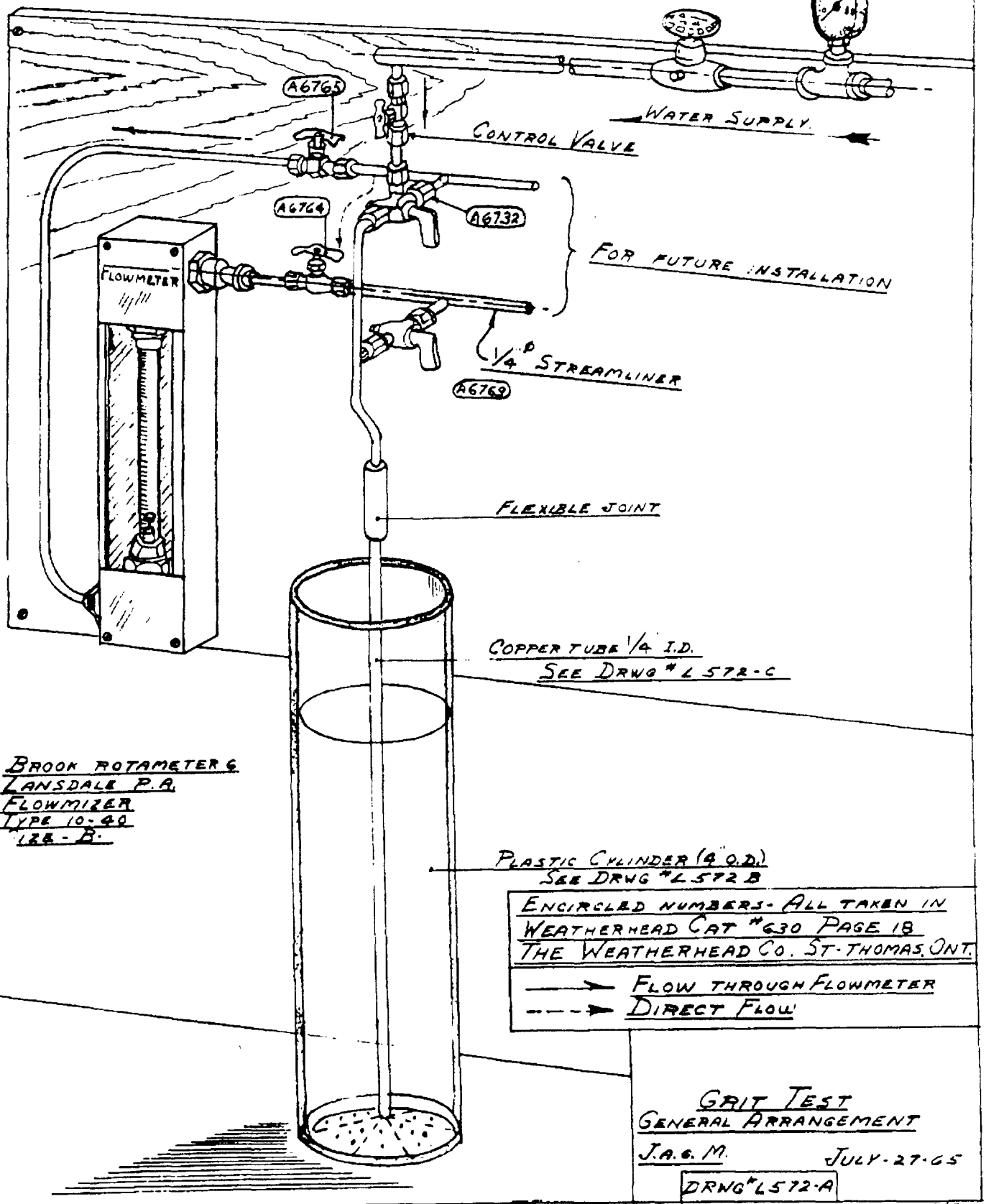

BROOK ROTAMETER CO.
LANSDALE P.A.
FLOWMIZER
TYPE 10-40
12A-B.

ENCIRCLED NUMBERS - ALL TAKEN IN WEATHERHEAD CAT # 630 PAGE 18
THE WEATHERHEAD CO. ST. THOMAS. ONT.

——→ FLOW THROUGH FLOWMETER
- - - → DIRECT FLOW

GRIT TEST
GENERAL ARRANGEMENT

J.A.G.M. JULY-27-65

DRWG # L 572-A

E-2/5

ST0720571

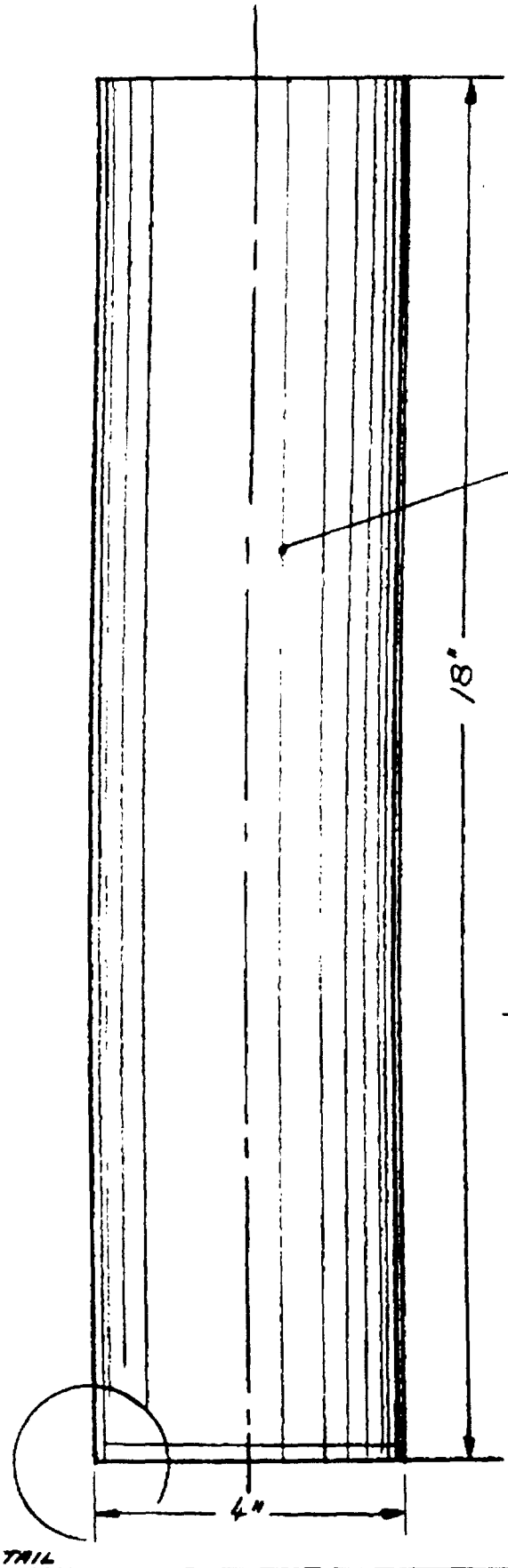

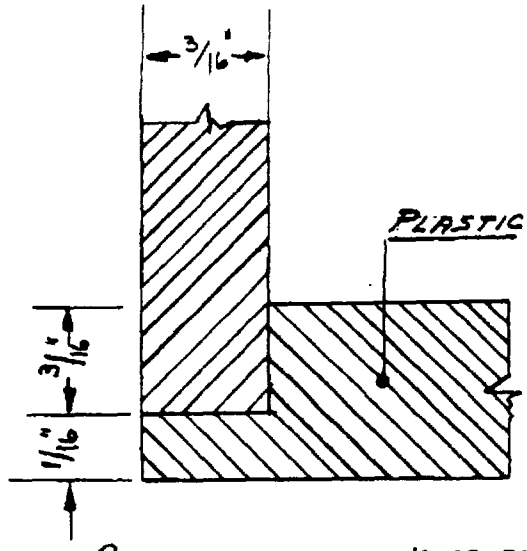

GLUED WITH TENSOL'S CEMENT
NO-7- I.C.I. WELWYN GARDEN

DETAIL
SEPARATING. VESSEL

DATE	DRWG BY	DRWG NO
JULY-1966	J.A.G.M.	L:572-B

ST0720572

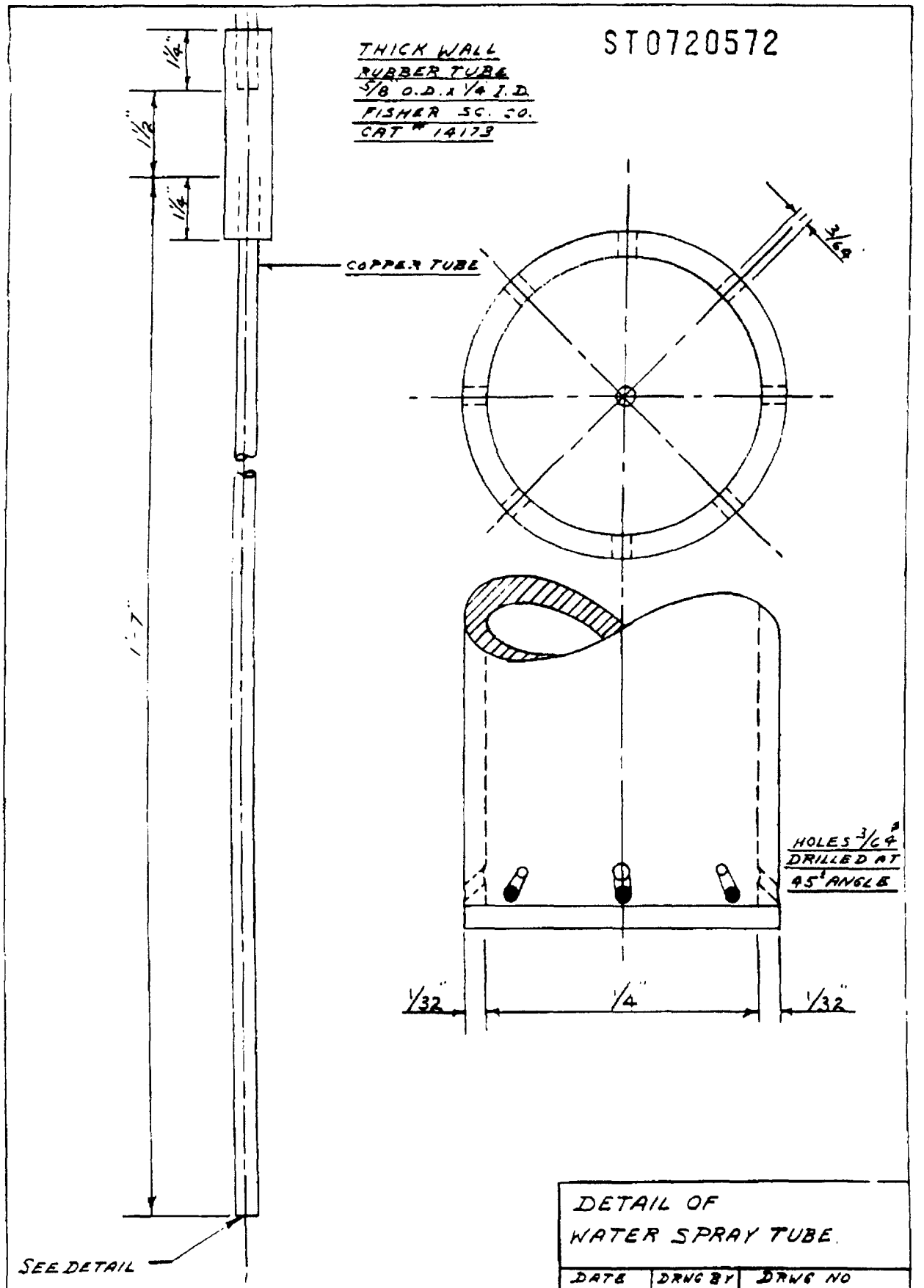

DETAIL OF
WATER SPRAY TUBE

DATE	DRWG BY	DRWG NO
JULY 26-68	J.A.G.M.	L-572-C

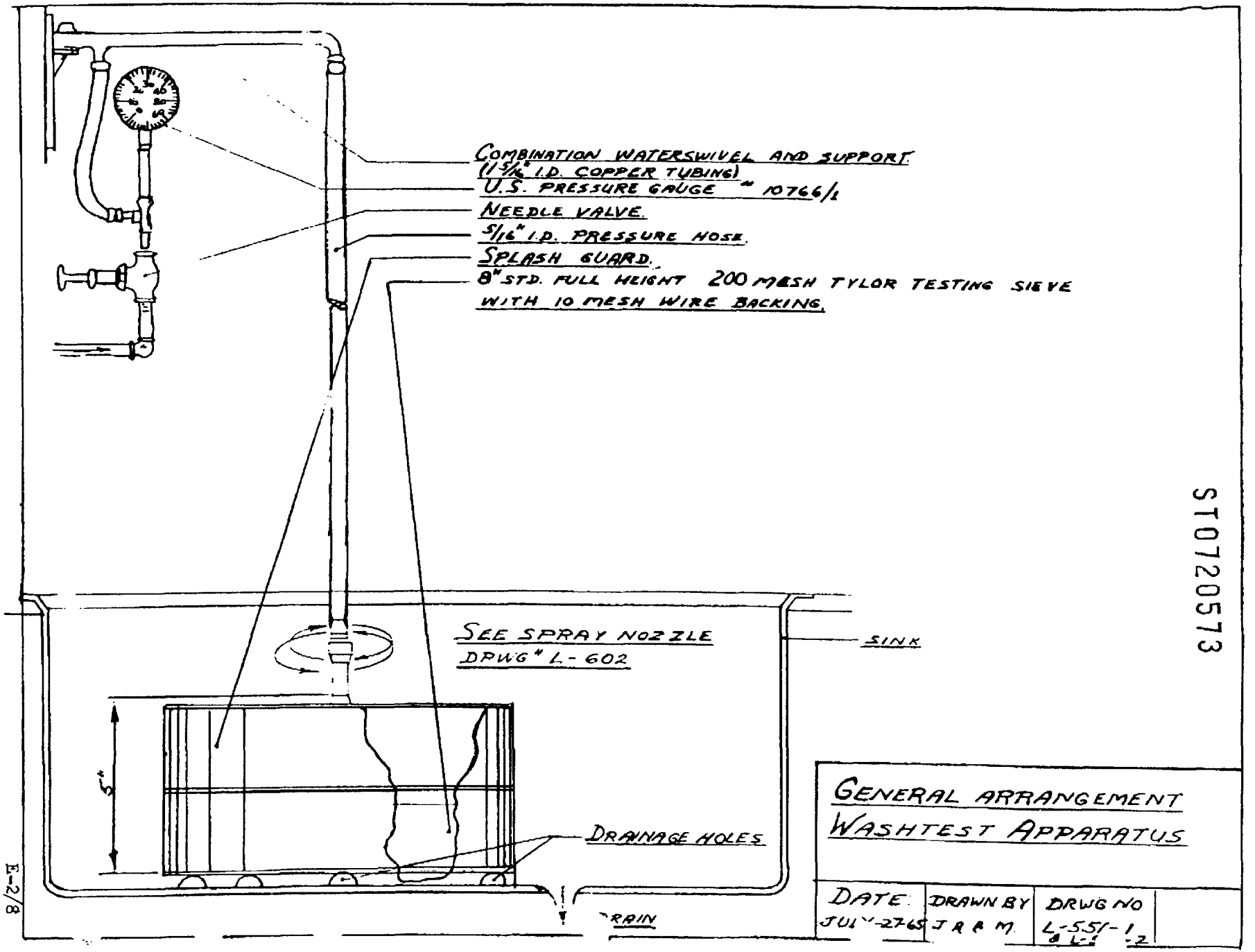

ST0720573

E-2/8

GENERAL ARRANGEMENT
WASHTEST APPARATUS

DATE	DRAWN BY	DRWG NO
JULY-27-65	J R R M	L-551-1 & L-2

ST0720574

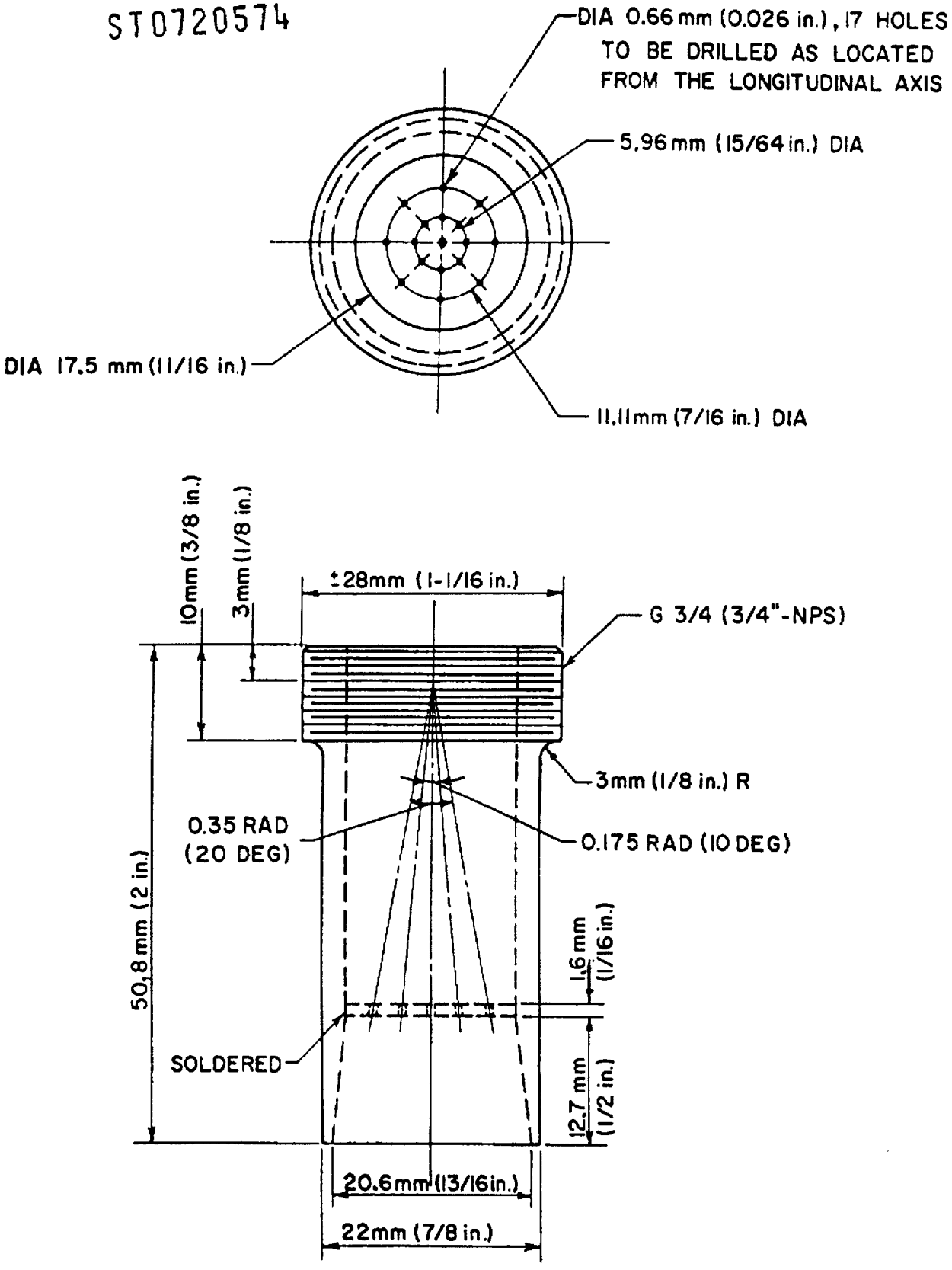

Fig.5 - Spray Nozzle Detail

0574.A

Chrysotile Asbestos Test Manual

Third edition

ST0720575

F-1-74

TENSILE STRENGTH

Revised and adopted by:

Asbestos Textile Institute - 28 Feb 1974

Quebec Asbestos Mining Association - ...

Printed in USA

F-1

TENSILE STRENGTH

Scope

1. This method of test covers a procedure for determining the tensile strength of asbestos fibre, expressed in grams per denier, where a denier is defined as the weight in grams per 9000 meters of length.

Apparatus

2. (a) The apparatus shall consist specifically of the parts described in paragraphs (b) to (i).

(b) Tensile Tester - The tensile tester shall be a vertical pendulum type with capacities of zero to ten pounds and zero to 20 pounds and shall have a constant rate of traverse of 12-inches per minute.

(c) Balance - The balance shall be capable of weighing ten milligrams to the closest 0.01 milligram.

(d) Mounting Cards - The mounting cards shall be constructed of cardboard approximately 0.01-inch thick and shall conform to the design shown in Figure 1.

(e) Cutter - The cutter shall consist of two razor blades mounted 1.00 plus or minus 0.02 centimeter apart.

(f) Scale - The scale shall be at least ten centimeters in length and shall be graduated to 0.02 centimeters or less.

(g) Cement - Epoxy resin. Mix two parts by weight of Araldite 502 resin with three parts by weight of ASP 400 clay. Blend 25 parts of this mix with one part by weight of HN 951 hardener and sufficient ASP 400 clay to give a high consistency.

Note: The Araldite 502 resin and the HN 951 hardener are supplied by CIBA Products Company, Kimberton, Pa.; the ASP 400 clay is supplied by Minerals and Chemicals Company, Menlo Park, New Jersey.

(h) Tweezers.

(i) Dissecting Needle.

Sampling of Asbestos Fibres

3. The sampling shall be conducted in accordance with the Standard Sampling and Preparation Procedure for Asbestos Fibre.

Procedure

4. (a) Size of Sample - The weight of sample used for this test shall be approximately 100 grams.

(b) Selection of Fibre Bundles for Test - The 100 gram sample shall be divided into eight equal portions and five fibre bundles shall be selected from each portion.

Note 1: In the evaluation of crudes preferably ten to 20 pieces of crude shall be selected and an equal number of fibre bundles shall be removed from each piece so that a total of 40 bundles are obtained.

Note 2: The fibre bundles shall be continuous and free of faults, as determined by visual inspection, and shall have a length of at least 1.5 centimeters and a weight of at least one milligram.

(c) Preparation of Fibre Bundles for Test - Each of the 40 fibre bundles shall be cut to a length of 1.00 plus or minus 0.02 centimeter and shall be dissected until the weight is 0.50 plus or minus 0.05 milligram. The length of each specimen shall be checked with a scale and the weight of each specimen shall be recorded to the closest 0.01 milligram.

Each specimen shall be placed on a mounting card so that it lies across the center of the slit perpendicular to the long dimension and shall be attached at the ends with cement. The cement shall be allowed to cure for a minimum of 16 hours at room conditions not in excess of 80 degrees Fahrenheit.

Note 3: The resin cure can be accelerated by heating, but the resultant wicking action causes the fibre specimens to become brittle.

(d) Tensile Strength Test - Each mounted specimen shall be placed between the grips of the tensile tester and the mounting card cut through to the slit on both sides. The tensile tester shall then be set in operation and the breaking load recorded to the closest 0.1 pound.

Calculation and Report

5. (a) The tensile strength of each of the 40 specimens shall be calculated to the closest 0.1 gram per denier using the following equation.

$$\text{Tensile Strength} = (\text{load}) / (1.98)\ (\text{weight})$$

where

load = breaking load of specimen in pounds
weight = weight per unit length of specimen in milligrams per centimeter.

(b) Report the average tensile strength of the 40 specimens to the closest 0.1 gram per denier.

ST0720579

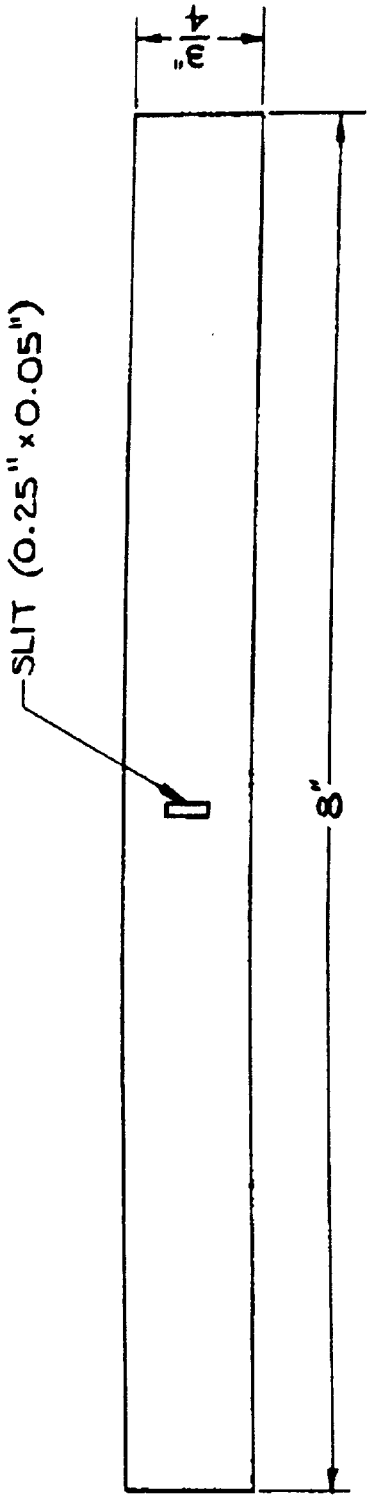

CARDBOARD MOUNT FOR TENSILE STRENGTH

FIGURE 1

F
2

0579.A

Chrysotile Asbestos Test Manual

Third edition

ST0720580

F-2-72

METHOD FOR ASBESTOS FIBER STRENGTH UNIT

Supersedes Method F-2 of the 1966 second edition

Revised and adopted by:

Asbestos Textile Institute - ...

Quebec Asbestos Mining Association - 6 Oct 1972

Printed in USA

ST0720581

Method for

ASBESTOS FIBRE STRENGTH UNIT[1]

Designation F-2-72

1. Scope

1.1 This method of test gives a procedure for the evaluation of the strength giving properties of asbestos fibres used to reinforce asbestos-cement products.

1.2 The purpose of this test method is to determine the number of strength units which may be assigned to the sample tested.

1.3 Asbestos fibre possesses the ability to impart strength to an asbestos-cement product. Every fibre grade may be regarded as possessing a certain quantity of strength giving units. The quantity of fibre required in an asbestos-cement composition varies inversely with the number of strength units it possesses. For example if an amount designated by X, of a fibre possessing 100 strength units produces a product of a given strength, 2X would be required to produce a product of equivalent strength from fibre possessing only 50 strength units.

1.4 The following definition is the basis for the strength unit test: An asbestos fibre that gives the standard strength at the standard density when used as ten per cent of the furnish is defined as having 100 strength units. Therefore, by knowing the per cent fibre required in the mix to give standard strength at the standard density it is possible to calculate the strength units of a sample of asbestos.

2. Summary of Method

2.1 This method covers the fabrication and flexural testing of asbestos-cement test specimens, which contain asbestos fibre from the sample being evaluated. The calculation of theoretical strength units of the asbestos, based upon the flexural strength, density and composition of the test specimens, is also described.

2.2 The specimen fabrication process includes the following steps:

2.2.1 Asbestos fibre preparation; including ball milling,

fiberizing, and blending.

2.2.2 Compounding; including dry mixing, the preparation of saturated water, and wet mixing.

2.2.3 Test specimen formation; including the pressing of asbestos-cement cakes in a semi-automatic press.

2.2.4 Specimen curing; including a stage in a humidity cabinet, autoclaving, air cooling, and saturating in a water bath.

2.3 Specimen testing; including the determination of immersed mass, saturated mass, flexural strength, specimen thickness and width, and dry mass.

2.4 Calculations; involving the determination of specimen volume, modulus of rupture, density, modulus of rupture adjusted for density, asbestos fibre content required to attain standard strength, fibre ratio required, and strength units.

3. Significance.

3.1 This test method facilitates the comparison of different types and grades of asbestos by the property most pertinent to its use in asbestos-cement, namely the strength or reinforcing value it imparts to the product.

3.2 While similar comparative results could be obtained on any given production equipment, this method allows the testing of small samples, avoids costly interruptions in production for numerous trial runs, and allows test values to be obtained by a single standard method so results can be compared among different locations.

3.3 Strength Unit (S.U.) value of a fiber blend used in asbestos-cement products may be estimated by taking the proportionate S.U. value of each component of the fiber blend.

3.4 If the fiber blend is formulated with the aim to optimize another fiber property such as filterability, the S.U. calculation will assure that the blend will not fall below an acceptable strength level.

3.5 This method of test is restricted to grades of asbestos used in asbestos-cement products. Very long (Group 3)[2] fibers are difficult to evaluate by this method because the test specimens produced may not be sufficiently homogeneous. Similarly, very short (Group 7)[2] grades may not be retained satisfactorily in the mold during the pressing of test specimens or may not provide sufficient strength to meet the test requirements.

3.6 This test method is suitable for specification acceptance, manufacturing control, and development.

3.7 Because of certain differences between this method and the many variations in plant production procedure commonly used in asbestos-cement manufacture, it is emphasized that the strength values obtained by this standardized procedure will not necessarily give exactly the same strength values as obtained at any one specific manufacturing plant.

4. Definitions - Refer to Definitions A-2, Terms Relating to Asbestos[3].

5. Apparatus.

5.1 Ball Milling.

5.1.1 Porcelain ball mill jars[4] meeting the following specifications:

Capacity	11,000 cm^3 (671 $in.^3$)
External diameter	280 mm (11.02 in.)
Internal diameter	230 mm (9.06 in.)
Internal height	210 mm (8.27 in.)

5.1.2 Porcelain balls[4], machine made, meeting the following specifications:

Diameter	40 mm (1.575 in.)
Mass (each)	74×10^{-3} to 75×10^{-3} kg (0.163 to 0.165 lb).
Specific gravity	2.3 ± 0.1 (The manufacturer specifies a nominal specific gravity of 2.22).

Alternatively, hand-made balls approaching these specifications may be used.

5.1.2.1 Discard balls when their diameter is 35 mm (1.38 in.) or less.

5.1.3 Roll table, to rotate the ball mill jars at 6.81 ± 0.21 rad/s (65 ± 2 rpm). Refer to Note 1 following 5.4.2.

5.2 Fiberizing.

5.2.1 Disintegrator[5], B.O.P. Type O, driven at 565 ± 21 rad/s (5400 ± 200 rpm) by a squirrel cage induction motor rated at no less than 1.492 kW (2 hp.).

5.2.2 Perforated steel discharge plates[5] for the fiberizer. One each of the following opening diameters: 3, 5, 7 and 10 mm respectively.

5.2.3 Cardboard drum approximately 410 mm (16 in.) diameter x 400 mm (15 in.) high with removable ring clamp on top, and canvas dust cover (transition piece) to serve as a receiver for the fiberizer discharge. Other arrangements for receiving the fiberizer discharge which are satisfactory with respect to relief of static pressure generated by the fiberizer rotor, and with respect to the prevention of sample losses and contamination are acceptable. The free area of cloth while in operating position must be within the limits from 13×10^{-2} to 45×10^{-2} m^2 (1300 to 4500 cm^2), and the cloth must be square weave unbleached cotton duck weighing 0.41 ± 0.02 kg/m^2 (12 oz/yd^2), or a cloth of equivalent permeability.

5.3 Blending.

5.3.1 Polyethylene jar with cover[6], meeting the following specifications:

Inside diameter	311 mm (12.25 in.)
Outside diameter	327 mm (12.875 in.) {wall thickness 8 mm (0.3 in.)}
Inside height	311 mm (12.25 in.)

Other containers, such as stainless steel blenders, with similar internal dimensions may be used.

5.3.1.1 The jar may be fitted with a circumferential rubber tension band 100 mm (3.94 in.) wide by 3 mm (0.125 in.) thick to retain the cover. This band may be rolled down, turtle-neck fashion, when the cover must be opened. Alternatively the cover may be retained by mechanical clamps. In that case, the use of a gasket to seal the cover may be necessary.

5.3.1.2 The jar must be fitted with tires around the outer diameter to allow it to roll on a roll-table in a horizontal attitude, and to allow any clamps or projections to clear the rolls.

5.3.2 Roll-table to rotate the blending jar at a speed of 5.87 ± 0.21 rad/s (56 ± 2 rpm). Refer to Note 1 following 5.4.2.

5.3.3 Rolling sheet one meter (1 yd) square or larger, made of rubber, plastic, or some other flexible elastomer.

5.4 Dry mixing.

5.4.1 Polyethylene jar with cover[7], meeting the following specifications:

Inside diameter	248 mm (9.75 in.)
Outside diameter	257 mm (10.125 in.)
Inside height	273 mm (10.75 in.)
Capacity	132 x $10^{-4}m^3$ (13,200 cm^3)

Other containers, such as stainless steel mixers, with similar internal dimensions may be used.

5.4.1.1 The jar must be fitted with a rubber band as described in 5.3.1.1.

5.4.1.2 The exterior of the jar must be fitted with tires as described in 5.3.1.2.

5.4.1.3 The interior of the jar must be fitted with three mixing vanes located 2.09 rad (120°) apart, along the full length of the jar and projecting 38.1 mm (1.5 in.) from the inside wall. The vanes may be fastened to the wall by smooth head rivets, or an adhesive. The corners of the vanes at the jar opening should be rounded to a radius of 12.7 mm (0.5 in.). The vanes may be fabricated from aluminum or any other corrosion resistant sheet metal 1 mm (0.04 in.) thick.

5.4.2 Roll-table to rotate the blending jar at a speed of 8.17 ± 0.21 rad/s (78 ± 2 rpm). Refer to Note 1.

Note 1 - If a judicious choice of drive roll diameter and speed is chosen for the roll table, together with suitable tire dimensions for containers mentioned in 5.1.1, 5.3.1 and 5.4.1, it is possible to use the same roll table for the three containers. For example, if the drive roll has a diameter of 125 mm (4.93 in.) and a speed of 17.3 rad/s (165 rpm) then the appropriate speed would be obtained for each container if tires were adjusted to bring the effective outer diameters to 311 mm (12.25 in.) for the ball mill jars, 361 mm (14.21 in.) for the blending jars and 259 mm (10.2 in.) for the dry mixing jars.

5.5 Wet mixing.

5.5.1 Wet mixer as described in Figs. 1, 2, 3, 4 and 5 and mounted on the press. The drive motor must be able to maintain a speed of 62.83 ± 2.62 rad/s (600 ± 25 rpm) under load.

5.5.1.1 The Sunbeam Mix Master[8] motor suggested in Fig. 2, may be replaced for heavier duty by another motor such as the

Bodine motor[9] with one shaft at motor speed and another shaft driven through a right-angle gear with a speed reduction of six to one, or ten to one. This motor may be operated with a rheostat speed control, but more satisfactory performance is achieved by means of an auto-transformer.

5.5.1.2 An additional advantage of the Bodine motor is that if a strobe card is mounted on the higher speed shaft while the impeller is mounted on the other shaft, then the strobe card (consisting of two black and two alternating white segments) will rotate at 377 rad/s (3600 rpm) when the impeller is at 62.8 rad/s (600 rpm) and the strobe card will appear stationary when illuminated with standard florescent lamps operating on 60 cycle alternating current. For the ten to one speed reduction motors, mount the strobe card on the impeller shaft (the card will have 12 black segments and 12 white alternating segments in this case). This provides a simple accurate speed indicator.

5.5.1.3 A modified motor mount for a Bodine motor (Part No. 2) is shown in Fig. 5.

5.5.2 Impeller.

5.5.2.1 A plastic casting may be substituted for the rubber stoppers which are called for in the design of the impeller. (Fig. 3).

5.5.2.2 The impeller must rotate clockwise when looking from above, and the vanes must be pitched so as to impel the slurry downward.

5.5.2.3 Maximum clearance between the impeller and the conical wall of the wet mixer must be set at 6.3 mm (0.25 in.).

5.5.3 Rubber hoe as shown in Fig. 6.

5.6 Pressing.

5.6.1 Semi-automatic press[10] illustrated in Figs. 1, 7, 8, 17 and 18 capable of performing the following pressing cycle:

5.6.1.1 Manual Control (Refer to Figs. 1, 7 and 8).

Start with the toggle switch in the OFF position.
If contact is maintained on the UP push button, or on the UP foot switch, the press will close and as it closes, the pressure will rise until it reaches a value pre-selected on the high pressure relief valve.

The press may be opened by pushing the DOWN button which will open solenoid valve No. 2 and drop the ram, or by opening the manual dump valve.

5.6.1.2 Automatic Control (Refer to Figs. 1, 7 and 8).

With the toggle switch OFF timer No. 1 should be set to the required low pressure interval of 105 s. Timer No. 2 should be set for the required high pressure interval of 90 s.
Put the toggle switch in the ON position.
The cycle may be started by closing either the foot switch or the push button, and the following events will occur:

(a) The top limit switch will close at any required point in the ram travel, the pump will continue to run and solenoid valve No. 1 will open.

(b) When the press closes, pressure will rise to the value set on the low pressure relief valve.

(c) After the pre-selected interval (105 s), timer No. 1 times out.

(d) Automatically timer No. 2 starts. Solenoid valve No. 1 closes and pressure will rise at an adjustable rate to the value set on the high pressure relief valve:

(e) At the end of the interval selected on timer No. 2 (90 s) the motor stops and solenoid valve No. 2 opens permitting the ram to drop.

(f) As the ram bottoms, the lower limit switch opens causing the timers to reset preparatory to another cycle.

The rate of pressure rise to the high pressure relief valve setting may be controlled by adjusting the micrometer valve.
This system will operate for some time without over-heating but when continuous operation is planned, water should be circulated through the heat exchanger.

5.6.2 Holding and lowering device for confining mold as described in Figs. 9, 10, 11, 12, 13, 14, 17 and 18.

5.6.3 Top platen as described in Figs. 15, 16, 17 and 18.

5.6.4 Confining Mold as described in Figs. 17, 18, 19, 20 and 21.

5.6.5 Bottom platen as described in Figs. 17, 18 and 22.

5.6.6 Platen base as described in Figs. 17, 18, 23, 24 and 25.

5.6.7 Phosphor bronze or stainless steel wire screen corresponding to U.S. Sieve Series No. 40 described in ASTM Specifications E 11, for Wire Cloth Sieves for Testing Purposes[11]. The screen must measure 240 mm (9.5 in.) in length by 130 mm (5 in.) wide.

Note 2 - Bronze screening may stretch beyond specifications as a result of the pressing operation, and should be replaced.

5.6.8 Phosphor bronze or stainless steel wire screening corresponding to U.S. Sieve Series No. 16 as described in Specifications E 11. The screen must measure 240 mm (9.5 in.) long by 130 mm (5 in.) wide.

5.6.9 Perforated steel plate measuring 240 mm (9.5 in.) long by 130 mm (5 in.) wide, and conforming to the following specifications:

Thickness;	1.24 to 1.68 mm (0.049 to 0.066 in.)
Diameter of perforations;	3.18 mm (0.125 in.) ± 5 percent
Width of metal between holes;	2.38 mm (3/32 in.) (0.09375 in.) ± 20 percent.
Pitch of holes;	triangular (equilateral).

5.6.10 Settling tank, 130 mm (5 in.) wide by 640 mm (25 in.) long by 500 mm (20 in.) deep, made of galvanized sheet steel, with an overflow drainage system.

5.6.11 Asbestos cement, or plastic plates, measuring approximately 90 x 220 x 6 mm (3.5 x 8.5 x 0.25 in.). Ensure that the plates have not become bowed from previous usage. Refer to 8.8.2.1 and to footnote 18.

5.7 Curing.

5.7.1 Humidity cabinet capable of maintaining relative humidity between 90 and 100 percent at room temperature (15 to 32 °C)(60 to 90 °F).

5.7.2 Autoclave {approximately 460 mm (18 in.) internal diameter and 760 mm (30 in.) long, has been found convenient}, capable of maintaining 689.5 kPa (100 psig) gauge pressure of saturated steam (not superheated) at 170 °C(338 °F) for a period of 20 hours.

Note 3 - Warning. The autoclave must be rated at a pressure higher than 689.5 kPa (100 psig) in order to permit this pressure to be maintained. Refer to local government regulations for pressure vessels prior to purchase and installation of an autoclave.

5.7.2.1 Autoclave trays of steel plate 610 x 355 x 6 mm (24 x 14 x 0.25 in.). with a handle at one end.

5.7.2.2 Autoclave baskets as described in Fig. 26.

5.7.2.3 Asbestos-cement cover sheets approximately 360 x 610 x 6 mm (14 x 24 x 0.25 in.).

5.7.3 Saturating tank, large enough to saturate one day's

production of test specimens each measuring approximately 75 x 200 x 6 mm (3 x 8 x 0.25 in.). One press produces up to 90 test specimens per eight-hour shift.

5.8 Testing and Measuring.

5.8.1 Flexural testing machine capable of applying a load of 490 N (50 kgf) at the rate of 5.88 ± 0.29 N/s (0.6 ± 0.03 kgf/s). for testing machines with a constant rate of extension, as opposed to a constant rate of loading, these must be capable of extending at the rate of 0.1 mm/s (3.93×10^{-3} in./s). The dynamometer must read to 0.1 kgf (0.2 lbf) and must be equipped with a trailing needle or other mechanism to record maximum load attained on each test.

5.8.1.1 The specimen grips on the flexural tester must be of the center point loading type with a span of 152 mm (6 in.), and the bearing edges of the loading bars must have a radius of 6.35 mm (0.25 in.) and must be free to rotate in a plane perpendicular to the test specimen, and load direction.

5.8.2 Micrometer, 0 to 25 mm (0 to 1 in.) range, reading to 0.01 mm (5×10^{-4} in.). The micrometer spindle and anvil must be flat and must be either 6 mm or 0.25 in. nominal diameter.

5.8.3 Drying oven capable of maintaining a temperature of 105 to 110°C (220 to 230°F)and of sufficient size to hold one day's production of test specimens.

6. Reagents and Materials.

6.1 Calcium hydroxide ($Ca(OH)_2$) conforming to the specifications of the Committee on Analytical Reagents of the American Chemical Society. Other grades may be used provided it is first ascertained that the reagents are of sufficiently high purity to permit their use without lowering the accuracy of the determination.

6.2 Calcium sulfate (gypsum) ($CaSO_4 \cdot 2H_2O$) conforming to the specifications mentioned in 6.1.

6.3 Silica (ground quartz) (SiO_2) conforming to the following specifications:

SiO_2 content	99 percent minimum.

Wet sieve analysis by the technique described in ASTM Method C 430 for Fineness of Hydraulic Cement by the No. 325 Sieve[13].

U.S.[12] Sieve No.	Percent Passing
80	99
100	90
200	85

Note 4 - Silica with a specific surface area between 253 and 420 m^2/kg, as determined by ASTM Method C 204 for Fineness of Portland Cement by Air Permeability Apparatus[13], has been used for this purpose.

6.4 Portland Cement, Type I, conforming to ASTM Specifications C 150, for Portland Cement[13]. Screen the cement to remove lumps prior to use, on a U.S. No. 18 sieve[12], using the technique described in ASTM Method C 184 for Fineness of Hydraulic Cement by the No. 200 Sieve[13], or by any equivalent technique.

Note 5 - For better interlaboratory reproducibility of results, it may be advisable to procure the portland cement from a common source of supply[14].

Note 6 - Portland cements with specific surface areas between 330 and 372 m^2/kg, as determined by ASTM Method C 204, have been used for this purpose.

6.5 Kerosene corresponding to Jet A Kerosine described in ASTM Specifications D 1655 for Aviation Turbine Fuels[15] or U.S. Federal Specifications VV-K-211d for kerosene.

6.6 Raw linseed oil, conforming to ASTM Specifications D 234 for Raw Linseed Oil[16].

6.7 Distilled water, Type IV as specified in ASTM Specifications D 1193.

6.8 Saturated water.

6.8.1 Prepare saturated water by adding 2kg (4.4 lb) of $Ca(OH)_2$ and 3kg (6.6 lb) of $CaSO_4 \cdot 2H_2O$ per m^3 (264 U.S. gal) of distilled water at 24 ± 1°C (75 ± 2°F).

6.8.2 Allow to stand 24 hours agitating the water from time to time.

6.8.3 Siphon off the saturated water into clean containers.

6.8.4 If the temperature of the saturated water fluctuates, precipitation of the dissolved salts may occur. For this reason, it is preferable to filter this water at the point of use, for wet mixing purposes.

7. Sampling

7.1 In accordance with Method A-1[3].

7.2 The quantity of fibre required may range from 0.3 to 0.6 kg (0.66 to 1.32 lb) for higher and lower strength-imparting samples, respectively, assuming that re-testing will not be required.

7.3 A 0.3 kg (0.66 lb) asbestos sample charged to the ball-mill may be expected to yield approximately 0.25 kg (0.55 lb) after various losses due to the fibre preparation steps.

7.4 The quantity of prepared fibre required to give standard strength (defined in 1.4 and 9.1.5) must be predicted approximately in advance.

7.4.1 Predictions may be based upon previous fibre strength unit results obtained on the same grade, or on a similar grade of asbestos, as described in 7.4.3.1 and 7.4.3.2.

7.4.2 Alternatively predictions may be correlated to other test results or combinations of same provided by approved test methods[3].

7.4.3 If no basis is available for predicting the strength unit value of the sample under test, assume that this value is 100 as a first approximation, and calculate the asbestos requirements as follows:

7.4.3.1 Mass of prepared fibre required is equal to 17/(strength units) in kilograms.

7.4.3.2 The equivalent mass in pounds is equal to 37.5/(strength units) lb.

Note 7 - The Système International (S.I.) units shall be used for referee testing.

7.4.4 If prepared fibre requirements exceed 0.25 kg (0.55 lb), select an additional 0.3 kg (0.66 lb) aliquot from the sample. This additional aliquot must be ball-milled separately as described in 8.1.2.

8. Procedure

8.1 Ball-milling.

8.1.1 Place 6 ± 0.04 kg (13.24 ± 0.09 lb) of porcelain balls in a ball mill jar, add 0.3 kg (0.66 lb) of asbestos on top of the balls, close the jar securely, and place it on the roll-table.

8.1.2 If sample requirements exceed 0.3 kg of asbestos, ball-mill a second aliquot of 0.3 kg (0.66 lb) in a second ball-mill jar.

8.1.3 Roll the jars at 6.81 ± 0.21 rad/s (65 ± 2 rpm) for that time which ultimately gives the highest strength to the asbestos-cement specimens produced therefrom.

Note 8 - For chrysotile asbestos produced in the Province of Quebec, in Canada, 60 minutes ball-milling time has been found by testing to give the maximum strength for most grades. It is significant to recognize that the degree of conditioning required by the ball-milling phase of this particular preparational treatment procedure is dependent on specific fibre characteristics of recognizable fibre types of the fibres produced from individual ore bodies and indeed from differing separate mining areas within these individual ore bodies. The optimum ball-milling time required for Canadian chrysotile fibres is generally found to be within the range of 30 to 90 minutes and although say a 60 minutes time may be most suitable for some fibre types, the inherent potential of others can only be fully exploited by employing the longer or shorter times indicated by the individual fibre type characteristics.

8.1.4 For referee testing, ball-milling time should be agreed upon by the buyer and vendor.

8.1.5 Discharge the contents of the ball-mills into a clean container and brush or wipe clean of fibre each ball, as well as the interior of the jars.

8.2 Fiberizing.

8.2.1 Select the appropriate disintegrator discharge plate according to Table 1. Mount this plate onto the B.O.P. disintegrator, close the access port and fasten it securely, and start the motor.

TABLE 1 - Fiberizer Discharge Plate Openings

Q.S. Group[a] or Equivalent	Diameter of Holes in Perforated Plates[b]	
	mm	in. (approx)
3	10	0.394
4	7	0.275
5	5	0.197
6	3	0.118

(a) Quebec Standard (Q.S.) designation of chrysotile asbestos grades.

(b) A 10 mm plate size is optional for 4-Group fibres of types that benefit by resulting in ultimately higher strength results.

8.2.2 Feed the ball-milled asbestos directly into the inlet chute of the disintegrator, by-passing the feed hopper which has a tendency to clog, by means of a feeding pan such as shown in Fig. 27. Feed the sample at a rate of 0.3 kg (0.66 lb) per 90 to 120 s (1.5 to 2 min.) in a uniform flow so as to maintain a constant disintegrator speed. Changes in speed may be detected from changes in the pitch of the sound emitted by the machine.

8.2.3 Stop the motor and dislodge any agglomerations of asbestos which may have accumulated on the stator lugs and in interior cavities. Add these clots to the sample.

8.2.4 Pass the sample through the disintegrator a second time and discard any asbestos which remains hung up inside the disintegrator.

8.3 Blending.

8.3.1 Place the fiberized sample in a blending jar and roll at 5.87 ± 0.21 rad/s (56 ± 2 rpm) on a roll table for 10 min.

8.3.2 If two separate ball-mill charges of 0.3 kg (0.66 lb) each are required, then split the disintegrated sample approximately in half, and blend each half in a separate blending jar. In this case, mix the contents of both jars after blending by means of the rolling sheet in such a way as to prevent segregation and to minimize stratification.

8.4 Dry mixing.

8.4.1 Based upon the fibre mass determined in 7.4.3.1 and 7.4.3.2, calculate the mass of portland cement required as follows: (Refer to the example given in 9.1.7.2).

Kilograms of portland cement = 0.6 x {1.7 - (fibre mass in kilograms)}.
Pounds of portland cement = 0.6 {3.74 - (fibre mass in pounds)}.

8.4.2 Based upon the fiber mass determined in 7.4.3.1 & 7.4.3.2 calculate the mass of silica required as follows (Refer to the example given in 9.1.7.2):

Kilograms of silica = 0.4 {1.7 - (fibre mass in kilograms)}.
Pounds of silica = 0.4 {3.74 - (fibre mass in pounds)}.

8.4.3 Add the masses of prepared asbestos fibre, portland cement, and silica, as determined in 7.4.3.1, 7.4.3.2, 8.4.1, and 8.4.2 respectively, to the dry mixing jar, secure the cover, and roll on the roll-table at 8.17 ± 0.21 rad/s (78 ± 2 rpm) for 5 min.

8.4.4 Discharge the dry mixing jar onto the rolling sheet,

and roll the dry mix by lifting opposite ends of the sheet alternately, using two rolls per end for a total of four rolls.

8.4.5 Repeat this rolling technique before taking each portion of dry mix during the pressing of the individual specimens made from the mix. Alternate the direction of rolling after taking each specimen.

Note 9 - It is preferable to process the test specimens as soon as possible after dry mixing to limit the deleterious effects of the prehydration of the portland cement by contact with moisture in the asbestos or in the atmosphere.

Note 10 - Dry mixed samples containing cement may not be exposed to the atmosphere for more than two hours.

Note 11 - Dry mixed samples may be kept in storage in plastic, or moisture-proof, containers for periods not exceeding one week.

8.4.6 Do not compress the dry mix in any way.

8.4.7 Preweighing of the dry mix for each test specimen and subsequent storage prior to use is permissible. Refer to Notes 9 and 10.

8.5 Preliminary steps for producing test specimens.

8.5.1 Clean the press screens and the perforated plate before each pressing cycle, using running water and a stiff bristle brush.

8.5.2 Clean the retaining mold and the top platen die with a cloth.

8.5.3 Oil the bottom surface of the top platen die by means of a brush dipped into a mixture of ten parts kerosene to one part raw linseed oil.

8.5.4 Place the lower platen in position on the platen base, and pull it forward as far as it will go.

8.5.5 Stack the following items on top of the lower platen, in the order given hereunder: (refer to 5.6.7 to 5.6.9 for specifications)

Perforated plate
No. 16 wire mesh screen
No. 40 wire mesh screen
Retaining mold.

8.5.6 Press adjustments and settings.

8.5.6.1 Control the pressure attained during the dewatering

phase on the press by turning the low pressure relief valve handle (Fig. 1) counterclockwise to obtain minimum pressure. This pressure may not exceed 6.9 MN/m^2 (1000 psig) as shown on the press gauge.

8.5.6.2 Control the rate of rise by adjusting the full flow valve in the hydraulic circuit of the press, as shown in Fig. 8. Set the full flow valve to compress top platen springs fully as close as possible to 30s before the end of the low pressure cycle. This is to minimise loss of material without affecting the high pressure cycle rate of rise. Measure rate of rise by means of a 6 mm (0.236 in.) thick metal plate to replace the slurry.

8.5.6.3 Adjust the limit switch which starts the low pressure timer so that it starts timing when the top of the confining mold (Fig. 19) is in the same horizontal plane as the bottom of the upper platen (Fig. 15).

8.5.6.4 The upper platen die is fitted with suction nozzles (Figs. 15 and 16) that serve to aspirate water that is forced out between the mold and the die when it comes into contact with the slurry. These nozzles must be connected, through a liquid trap, by means of hoses, to a source of vacuum. A vacuum of 75 mm (3 in.) Hg has been found satisfactory, when set with pinched suction lines {8 mm (5/16 in.) bore} by means of a diaphragm type regulator[17] located 1.2 m (4 ft) from the suction nozzle outlets. Connect the suction nozzles on the mold to a suction flask by means of two separate parallel hoses which are led through the rubber stopper of the suction flask by means of metal tubes. A 4 dm^3 suction flask is recommended. Installation of the vacuum regulator as close as convenient to the suction flask outlet nozzle has been found satisfactory. Tap the vacuum manometer directly into the rubber stopper of the suction flask.

8.5.6.5 The lower platen base is fitted with a drainage nozzle to dispose of the water which is forced out through the screens when the die contacts the slurry in the mold. Connect this nozzle with a hose to the settling tank.

8.5.6.6 Set the rate of rise control valve shown on Fig. 8 so that 234.4 MPa gauge pressure (34,000 psig) will be attained after 30 s in the high pressure cycle.

8.5.6.7 Adjust the high pressure relief valve shown in Fig. 1 to maintain 234.4 MPa gauge pressure (34,000 psig) throughout the last 60 s of the cake formation phase {time from 300 to 360 s (5 to 6 min)}.

8.5.6.8 Adjust the extension of the upper platen springs by means of the socket head shoulder screws which retain them. (Refer to Fig. 15). Set the extension so that the top die will extrude the specimen cake from the confining mold at the end of the pressing cycle such that the bottom of the die will project

below the bottom surface of the confining mold by a distance of 0.2032 ± 0.0508 mm (0.008 ± 0.002 in.).

8.5.6.9 Adjust the spacers shown as parts 2 and 4 in Fig. 16 so that cake thickness will be 6 ± 0.25 mm (0.236 ± 0.010 in.). Thickness may be decreased by surface-grinding the spacers. Increased thickness may be obtained by the use of steel shims of appropriate thickness.

8.5.6.10 Check the brass loading bars (Fig. 23) for wear and replace these if wear exceeds 0.127 mm (0.005 in.).

8.6 Wet mixing.

8.6.1 Rinse the wet mixing cone and insert a No. 6 rubber stopper at the bottom.

8.6.2 Pour 4 x $10^{-4}m^3$ (400 cm^3) of saturated water at 24 °C (75 °F) into the cone.

8.6.3 For the wet mixing of the test specimens in each batch, proceed as follows:

8.6.3.1 For the wet mixing of the first test specimen, start the wet mixer motor and immediately add 0.145 kg (0.32 lb) of dry mix. (Note 11).

8.6.3.2 For the wet mixing of subsequent test specimens, wait until the start of the high pressure cycle on the specimen press, and then immediately start the wet mixer motor and immediately add 0.145 kg (0.32 lb) of dry mix (Note 10).

Note 12 - The timing for the sequence of test specimen formation is continuous from this point; the time at which the mixer is started being zero.

8.6.4 Add an additional 5 x $10^{-5}m^3$ (50 cm^3) of saturated water, to rinse down the walls of the cone, while the mixer motor is running.

8.6.5 When the end of the two minute wet mixing period approaches, swing the wet mixer on its swivel support so that the discharge chute leads directly to the specimen mold on the press.

8.6.6 Transfer of slurry {time 120 to 165 s (2 to 2.75 min.)}

8.6.6.1 When the time reaches 120 s (2 min.), stop the mixer motor and simultaneously remove the stopper at the bottom of the cone to discharge the slurry into the mold by means of the chute.

8.6.6.2 After the slurry has discharged, spin the mixer motor briefly to clean the impeller by centrifugal force.

8.6.6.3 Clean the walls of the cone by means of a rubber

spatula.

8.6.6.4 Scrape the chute clean by means of the straight edge on the rubber hoe.

8.6.6.5 Distribute the slurry evenly in the mold by means of the toothed edge on the rubber hoe. Carry out this operation in as few strokes as possible to prevent segregation. Do not use more than three strokes. The entire slurry transfer time should be 45 s.

8.6.7 Swing the wet mixer and chute out of the way, and above a suitable container to receive the rinsings.

8.6.8 Rinse the cone and impeller with running water and discard the rinsings. This operation may be carried out later, during the pressing cycle, when convenient.

8.7 Pressing.

8.7.1 After the preliminary steps in 8.5 and the transfer of the slurry in 8.6.6 and 8.6.7, push back the confining mold and bottom platen assembly together until they are directly beneath the top platen die and the confining mold hooks contact the yoke rods between the set screw collars. (Figs. 9, 17, 18, 19 and 20).

8.7.2 Dewatering {time 165 to 270 s (2.75 to 4.5 min.)}.

8.7.2.1 Start the cycle by opening the safety switch and closing the foot switch. The low pressure timer is thus activated.

8.7.3 Cake formation {time 270 to 360 s (4.5 to 6 min.)}.

8.7.3.1 After the dewatering interval, timer No. 1 automatically shuts off and starts timer No. 2, which controls the cake formation period.

8.7.3.2 The pressure will rise to 234.4 MPa gauge pressure (34,000 psig) in 30 s and remain at that pressure for a dwell time of 60 s.

8.7.4 Specimen cake discharge.

8.7.4.1 At the end of the dwell time interval {360 s (6 min.) of the continuous timing sequence}, timer No. 2 times out, and the press pump motor stops.

8.7.4.2 The ram will drop and the top die will be forced away from the supporting plate of the top platen by the springs shown in Fig. 15. Since the confining mold is supported rigidly by the holding device (Fig. 9), the top die will pass through the confining mold, exposing the specimen cake for removal.

8.7.4.3 As the ram drops, insert a flat asbestos-cement

or rigid plastic sheet between the specimen and the top of the screen on the bottom platen to receive the specimen. The maximum clearance between the bottom of the cake and the top of the receiving sheet should be 6 mm (0.25 in.) in order to protect the specimen from excessive flexing.

8.7.4.4 If the specimen does not fall of its own accord, strip it carefully from the die by inserting a thin spatula between the cake and the die. It is permissible for experienced technicians to hold the receiving sheet in contact with the specimen while the latter is stripped from the die.

8.7.4.5 Remove the asbestos-cement or plastic sheet, with the specimen cake on top, from the press and smooth any rough edges or flashing with the spatula. Ensure that the bottom of the spacer does not carry water to the top of the preceding cake.

8.7.4.6 Stamp a number at both ends of the specimen by means of a band numberer, or otherwise identify the specimen by any suitable means. If ink or pigments are used, make sure that these will withstand the subsequent curing steps without fading beyond use.

8.7.4.7 Clean the screens and the perforated plate by brushing in running water, and return to the grooved lower platen for the next test.

8.7.4.8 Lower the confining mold (Fig. 19) by releasing the holding device (Fig. 9).

8.7.4.9 Wipe remnants of the slurry from the confining mold and the die with emphasis on the sides of the die in order to prevent clogging of the suction system channels. The latter must be kept clean to obtain reproducible results.

8.8 Specimen curing.

8.8.1 Moist Cure.

8.8.1.1 Stack the receiving sheets bearing the pressed specimens one above the other, and keep the pile covered with a wet cloth during the pressing of the other specimens from the same batch.

8.8.1.2 When the entire batch has been pressed, transfer the pile of specimens and receiving sheets to the humidity cabinet. A wet cloth may be left wrapped around the pile while it is in the humidity cabinet.

8.8.1.3 Keep specimens in the humidity cabinet for a minimum period of 16 h and a maximum period of 72 h. For referee testing, hold the specimens in the humidity cabinet for a period of 24 ± 2 h.

8.8.1.4 Operate the humidity cabinet at 90 to 100 percent

relative humidity, at 15 to 32 °C (60 to 90 °F).

8.8.2 Autoclaving.

8.8.2.1 After the moist curing period is completed, remove the specimens from the humidity cabinet, and separate the specimens from the receiving sheets. If the specimens adhere to the sheets, tap the latter, on edge, sharply against a table top, and this will dislodge the specimens[18].

8.8.2.2 Stack the specimens in a wire basket shown in Fig. 26, and place the basket on the autoclave tray mentioned in 5.7.2.1. Alternatively, stack manually.

8.8.2.3 Close the autoclave and raise the pressure to 689 ± 7 kPa gauge pressure (100 ± 1 psig) within a two-hour period.

8.8.2.4 Bleed off steam from the autoclave to remove all the air which was enclosed initially. When all the air has been purged the saturated steam temperature of 170 ± 5 °C (338 ± 8 °F) will be indicated on the autoclave thermometer. Since thermometers are inherently more reliable than common pressure gauges, operate the autoclave on the temperature basis. Make sure that the steam supplied consists only of saturated steam.

8.8.2.5 Cure the specimens at 170 ± 5 C (338 ± 8 F) for 20 h.

8.8.3 Saturation.

8.8.3.1 After autoclaving, remove the cakes immediately from the autoclave and allow them to cool in air at room temperature sufficiently to prevent warming the immersion water mentioned in 8.8.3.2, beyond the limits allowed.

8.8.3.2 Immerse the cakes in clean water at 25 ± 3 °C (77 ± 5 °F) so that the specimens are completely covered for 24 h. Leave the cakes in the baskets during the immersion. Alternatively, stack the cakes manually.

8.8.3.3 The formation of a film of scum on the surface of the water is normal, and may be attributed to pressing oil and other matter washed from the specimens. Discard the water each time, after using it once.

8.9 Specimen measurement and testing.

8.9.1 Immersed specimen mass.

8.9.1.1 Weigh each specimen while completely immersed in clean water at 25 ± 1 °C (77 ± 2 °F).

8.9.1.2 Suspend the weighing platform, or specimen holding hooks, by means of small diameter monofilament impermeable thread

or wire, at the point where the suspension system traverses the water surface.

8.9.1.3 Record immersed weights for each specimen to the nearest 0.0001 kg (0.1 g), and return each specimen to the saturating tank while the other specimens are being weighed.

8.9.2 Saturated specimen mass.

8.9.2.1 After immersed masses for all the specimens in a basket have been determined, remove the basket from the saturating tank and support it at a compound angle of 0.78 rad (45°) from the vertical. That is at 0.78 rad (45°) from the front elevation and 0.78 rad (45°) from the side elevation. Alternatively, stack manually.

8.9.2.2 Allow the specimens to drip dry for a period extending from 7 to 15 min., and determine the saturated mass (drip dry weight). Start weighing specimens after 7 min. and continue weighings until all specimens have been weighed, or until the time limit of 15 min. has been reached, whichever occurs first. If the specimens cannot be weighed in the allowed time, return the unweighed specimens to the saturating tank for an additional period of 15 min. before repeating the drip dry step.

8.9.2.3 Record the saturated masses for each specimen to the nearest 0.0001 kg (0.1 g), and re-immerse the specimens or cover them with a wet cloth until flexural testing is begun.

8.9.3 Flexural testing.

8.9.3.1 Load each specimen in flexure until fracture of the specimen occurs. Load at the constant rate of 5.89 ± 0.29 N/s (0.6 ± 0.03 kgf/s). Alternatively, a flexural tester with a constant rate of extension may be used. In the latter case, set the rate of extension at 0.1 mm/s (14.17 in./h.).

8.9.3.2 Flexural tester dynamometers equipped with a trailing needle to record the maximum load attained are preferable. Otherwise, make every effort to observe the maximum load attained before incipient failure deformation of the specimen occurs.

8.9.3.3 Record the maximum load, called the breaking load, to the nearest 1 N (0.1 kgf) (0.5 lbf) for each specimen.

8.9.4 Specimen thickness.

8.9.4.1 Measure specimen thickness near the fracture on one of the broken halves as follows:

8.9.4.2 Place the center of the micrometer anvils at approximately 13 mm (0.5 in.) from the fracture at mid-width, and measure thickness to the nearest 0.01 mm (0.0005 in.). Then locate the center of the micrometer anvils at approximately

13 mm (0.5 in.) from the fracture, at approximately 13 mm (0.5 in.) from each side of the specimen and measure thickness at both locations.

8.9.4.3 Take care that the micrometer anvils are not too near the cake sides (not the fracture edge) because thickness is usually greater at these points.

8.9.4.4 Record the three thicknesses for each specimen. If results are consistently different for the two side measurements, this may indicate that the specimens do not have parallel faces, and the alignment of the press platens should be checked.

8.9.5 Specimen width.

8.9.5.1 Specimen width is assumed constant for the purpose of this test. However, optional determination of specimen width may be made at this point to allow the determination of true modulus of rupture if this information is desired.

8.9.5.2 Use calipers with long thin parallel jaws which are perpendicular to the direction of extension. These will permit measurement of specimen width even with diagonal fractures.

8.9.5.3 Record the width to the nearest 0.2 mm (1/128 in.) for each cake.

8.9.6 Dry specimen mass.

8.9.6.1 After testing and measuring, return the broken specimens to the wire basket and place them in the drying oven. Alternatively, stack manually.

8.9.6.2 Dry the specimens at 105 to 110°C (220 to 230°F) for 24 h. excluding the time required to reach the specified temperature. Allow cakes to cool for 1.8 ks (30 min.) minimum, but not longer than 7.2 ks (2 h.). Weigh cakes as soon as they can be handled with bare hands.

8.9.6.3 Weigh both halves of each broken cake together to the nearest 0.0001 kg (0.1 g) and record this mass for each specimen. Then discard the specimens.

9. Calculation

9.1 Standard calculation.

9.1.1 Specimen volume - Determine the volume of each specimen from the following equation:

$$V = (S - I)/D$$

Where V = Volume of specimen in cubic meters

I = Immersed mass in kilograms

S = Saturated mass in kilograms

D = Density of water

= 1000 kg/m^3

9.1.2 Dry specimen density. - Determine the dry density of each specimen from the following equation:

$$A = B/V = BD/(S-I)$$

Where A = Dry specimen density in kg/m^3

B = Dry specimen mass in kg

V = Volume of specimen in m^3

9.1.2.1 In keeping with the limits on thickness imposed in 8.5.6.9, the density may not exceed 1.6 ± 0.07 Mg/m^3 to permit valid density corrections.

9.1.3 Flexural strength.

9.1.3.1 Calculate the flexural strength of each specimen as described hereunder.

9.1.3.2 Determine the flexural modulus of rupture from the following equation for a simple beam with center point loading:

$$MR = \frac{3Pl}{2bt^2}$$

Where MR = Modulus of Rupture in N/m^2 (kgf/m^2)

P = Maximum load attained N (kgf)

l = Span in m

b = Width in m

t = Average thickness in m

9.1.3.3 Determine the test modulus of rupture from the following equation.

$$MR_T = \frac{(3)\quad(P)\quad(0.152)}{(2)\quad(0.0762)\quad(t^2)} = \frac{3P}{t^2}$$

Where MR_T = Test Modulus of Rupture, N/m^2 (kgf/m^2).

P = Maximum load attained, N (kgf).

t = Average thickness, m.

0.152 = Nominal Span, m.

0.0762 = Nominal Width, m.

Example: For a specimen with a 392 N (40 kgf) breading load and an average thickness of 6.00 mm

$$MR_T = \frac{(3)\quad(40)}{(0.006)^2} = 32.7\ MN/m^2\ (=333 \times 10^4\ kgf/m^2).$$

9.1.3.4 Correct the Test Modulus of Rupture (MR_T) to a common density basis as follows, based upon the arbitrary choice of a standard density of 1.6 Mg/m^3 (1.6 g/cm^3):

$$MR_A = \frac{(1.6 \times 10^6)^2\ (MR_T)}{A^2}$$

Where MR_A = Adjusted Modulus of Rupture, N/m^2 (kgf/m^2).

MR_T = Test Modulus of Rupture, N/m^2 (kgf/m^2).

A = Dry specimen density, kg/m^3.

1.6×10^6 = Standard density, kg/m^3.

Example: For a dry specimen density of 1.58×10^6 kg/m^3 and MR_T of 32.7 MN/m^2 (333×10^4 kgf/m^2.

$$MR_A = \frac{(1.60 \times 10^6)}{(1.58 \times 10^6)^2} \times 32.7 = 20.9\ N/m^2\ (341 \times 10^4\ kgf/m^2).$$

Since this strength exceeds the allowable range described in 9.1.4 and 9.1.5.1 below, this specimen is not valid and results derived therefrom may not be used in the calculations of average batch performance.

9.1.3.5 Eliminate any individual value of MR_A varying from the average by more than 7.5 per cent of the average (including results on ten specimens), and calculate a new average strength. If more than three such specimens must be eliminated, repeat the whole test.

9.1.4 Reference strength level. - A standard reference strength for the specimens has been arbitrarily chosen as that which corresponds to a test modulus of rupture of 26.97 MN/m^2 (275×10^4 kgf/m^2) at a dry cake density of 1.6×10^3 kg/m^3.

9.1.5 Calculating fibre content to give standard strength.

9.1.5.1 The asbestos fibre content of the dry mix should be

chosen so that the adjusted modulus of rupture (MR_A) lies in the range from 25.6 to 28.2 MN/m^2 (261 to 288 kgf/cm^2). If the MR_A exceeds this range, prepare a new series of test specimens at a different fibre content, as determined in 9.1.5.2.

9.1.5.2 Calculate the asbestos fibre weight required from the following equation:

$$F_A = \frac{(0.145 - F_A)\quad (F_T)\qquad (275 \times 10^4)}{(0.145 - F_T)\qquad\qquad (MR_A)}$$

Where F_A = Adjusted asbestos Fibre mass in the dry mix, per specimen, to give standard strength, kg.

F_T = Mass of asbestos Fibre per specimen Tested, kg.

MR_A = Adjusted Modulus of Rupture, kgf/m^2.

0.145 = Total mass of dry mix per specimen, kg.

275×10^4 = Standard reference strength, kgf/m^2.

9.1.5.3 The percent asbestos fibre required in the dry mix to give standard strength

$$= F_A \times 100 / 0.145$$

$$= \frac{(275 \times 10^4\ F_T \times 100}{MR_A\ (0.145 - F_T) + 275 \times 10^4\ F_T}$$

$$= \frac{(275 \times 10^4\quad Q_f \times 100}{MR_A\ (1.00 - \quad Q_f) + 275 \times 10^4\ Q_f}$$

Where Q_f = Ratio of asbestos fibre mass to total dry mix mass.

9.1.6 Calculation of strength units.

9.1.6.1 An asbestos fibre that gives the standard strength at the standard density when used as ten percent of the furnish is defined as having 100 strength units. Therefore, by knowing the percent asbestos fibre required in the mix to give standard strength (obtained in 9.1.5.3), it is possible to calculate the strength units of the fibre sample from the following equation:

Strength Units = 1000 /(% fibre required in dry mix).

9.1.7 Sample calculation.

9.1.7.1 The following is a general example which covers the analysis of typical test data:

9.1.7.2 Mix composition.

Q_f = 0.125

F_T = Fibre mass in kilograms per specimen

= 0.145 x 0.125 = 0.0181 kg

C_T = Cement mass in kilograms per specimen

= 0.6 x (0.145 - 0.0181) = 0.0761 kg

S_T = Silica mass in kilograms per specimen

= 0.4 x (0.145 - 0.0181) = 0.0508 kg

Total mass per specimen = 0.0181 + 0.0761 + 0.0508 = 0.145 kg

9.1.7.3 Average strength data:

P = breaking load = 31.0 kgf

T = Average thickness at break = $\frac{1}{3}$ (5.90 + 5.90 + 6.20) mm

= 6.00×10^{-3} m

A = Dry specimen density = 1580 kg/m^3

9.1.7.4 Flexural moduli of rupture:

$$MR_T = \frac{3P}{T^2} = \frac{(3)\ (31.0)}{(6.00 \times 10^{-3})^2} = 258 \times 10^4 \text{ kgf/m}^2$$

$$MR_A = \frac{(1600)^2\ (MR_T)}{A^2} = \frac{(1600)^2\ (258 \times 10^4)}{(1580)^2} = 265 \times 10^4 \text{ kgf/m}^2$$

9.1.7.5 Percent fibre required =

$$\frac{275 \times 10^4 \times F_T \times 100}{MR_A\ (0.145 - F_T) + 275 \times 10^4\ F_T}$$

$$= \frac{(275 \times 10^4)\ (0.0181)\ (100)}{(265 \times 10^4)\ (0.145 - 0.0181) + (275 \times 10^4)\ (0.0181)} = 12.9\%$$

or, percent fibre required =

$$\frac{(275 \times 10^4\ (Q_f)\ (100)}{MR_A\ (1.00 - Q_f) + (275 \times 10^4)\ Q_f}$$

$$= \frac{(275 \times 10^4)\ (0.125)\ (100)}{(265 \times 10^4)\ (1.00 - 0.125) + (275 \times 10^4\ (0.125)} = 12.9\%$$

9.1.7.6 Strength units = 1000 / (percent fibre required)

= 1000 / 12.9 = 78 units

9.2 True flexural modulus of rupture.

9.2.1 If the true width has been measured, determine the true flexural modulus of rupture from the following equation which is applicable to a simple beam with center point loading:

$$MR = \frac{3Pl}{2bt^2}$$

Where MR = True flexural modulus of rupture, N/m^2 (kgf/m^2).

P = Maximum load attained, N (kgf).

l = Span, m

b = Width, m

t = Average thickness, m

9.3 Point value.

9.3.1 Point value is considered, by some segments of the industry, as an index of commercial value. Several formulas for the calculation of point value are presently in use. However, only one will be given here to prevent the dissemination of undesirable practices.

9.3.2 Calculate point value from the following equation:

P.V. = (S.U. - 10.0)/1.39

Where P.V. = Point value, in points.

S.U. = Strength unit, in units.

10. Report.

10.1 Fully identify the sample tested as to designation and origin.

10.2 Report the following data:

Q_f tested.

Q_f required.

MR_A average.

Number of cakes acceptable.

Strength units.

10.3 If any optional or alternative calculations are carried out, remarks to this effect must be contained in the report, and if point value is calculated, report this as well.

11. Precision and accuracy.

11.1 Precision. - Round robin testing indicates that interlaboratory reproducibility within five per cent of the mean strength unit may be attained in 98 per cent of the cases, using the same cement, silica and fibre ratio.

11.2 Accuracy.

11.2.1 The following rules to ensure accuracy should be enforced:

11.2.2 Adhere to the procedure scrupulously.

11.2.3 Avoid overloading the humidity cabinet, water bath, and the drying oven beyond the point where rapid humidity and temperature equilibrium can be attained.

11.2.4 Use a uniform cement which meets specifications and which imparts consistent high strength to the specimens. Using the same cement is recommended for referee testing. Protect the cement from moisture at all times.

11.2.5 Ensure that the mold and platens are not worn beyond specifications.

ST0720608

FOOTNOTES

1. Supersedes designation F-2 of the 1966 second edition. Dates of approval or latest revision: Asbestos Textile Institute, latest editorial revision 28 Feb 1974; Quebec Asbestos Mining Association, adopted 6 Oct 1972, latest editorial revision 14Mar 1974.

2. Quebec Standard (Q.S.) designation of chrysotile asbestos grades.

3. Appears in Chrysotile Asbestos Test Manual, third edition, available from the Quebec Asbestos Mining Association, 580 Grande Allée East, Suite 320, Quebec, P.Q., Canada, G1R 2K2.

4. Type KU5a ball-mill jars, and machine-made balls, manufactured by Staatliche Porzellan Manufaktur, Berlin Werk Selb, Selb/afr. Hartmannstrasse 1-3, German Federal Republic (West Germany) have been found suitable. These are distributed by Fish-Schurman, 70 Portman Road, New Rochelle, N.Y., U.S.A.

5. Manufactured by: Ateliers de Lessines S.A., Division BOP, 90 rue Dobbelenberg, Haren 1130, Bruxelles, Belgium.

6. Such as supplied by: Canadian Laboratory Supplies Limited, Box 2090 Stn. St.Laurent, Montreal 307, P.Q., Canada {Specify dimensions required, request a design similar to catalog No. J3028, and refer to Canlab quotation No. 2713 (1969)}.

7. Such as containers supplied by Canadian Laboratory Supplies Limited, Box 2090, Stn. St.Laurent, Montreal 307, P.Q., Canada (Catalog No. J3028-14). These must be fitted with suitable vanes.

8. Trade mark of the Sunbeam Company.

9. Catalog No. 134-1 distributed by Sepor Laboratory Supply, Box 4245 Long Beach, Calif. 90804, USA, has been found suitable.

10. Model PW22X, made by Pasadena Hydraulics, Inc., 1433 Lidcombe, El Monte, California, has been found suitable.

11. Annual Book of ASTM Standards, Part 41.

12. Described in ASTM Specifications E 11, for Wire Cloth Sieves for Testing Purposes. Appears in the annual Book of ASTM Standards, Part 41.

13. Annual Book of ASTM Standards, Part 13.

14. Canada Cement Lafarge Co. Ltd., 606 Cathcart Street, Montreal, P.Q., Canada, has been found a suitable source of supply.

15. Annual Book of ASTM Standards, Part 24.

16. Annual Book of ASTM Standards, Part 29.

17. The Stratos vacuum regulator model 16, made by Fairchild Hiller, Industrial Products Division, 1501 Fairchild Drive, Winston Salem, N.C., 27105, has been found satisfactory for this purpose.

18. Wax the receiving sheets, as required, to prevent this occurrence.

ST0720610

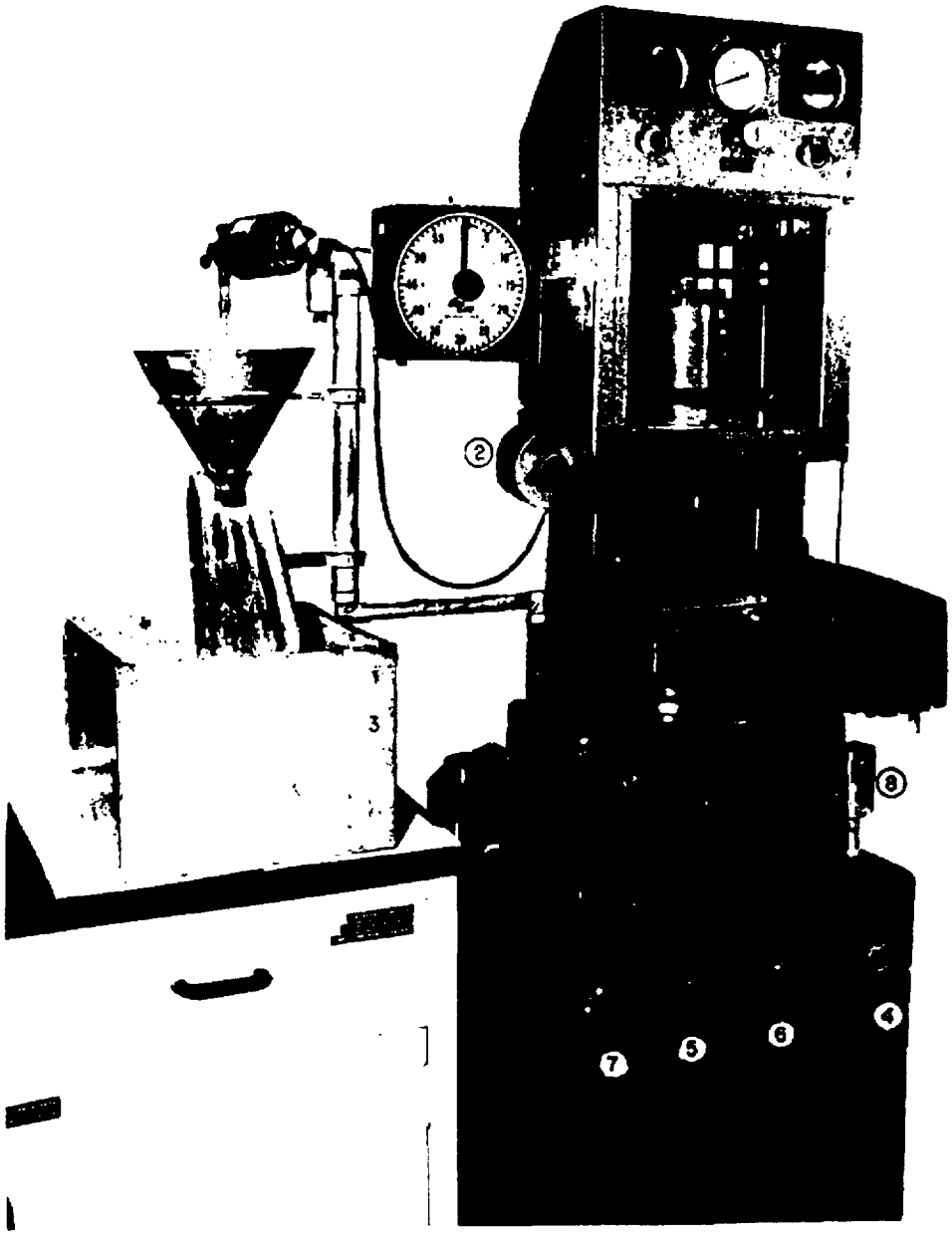

LEGEND- 1. TOGGLE SWITCH
2. RHEOSTAT SPEED CONTROL
3. SETTLING TANK
4. LOW PRESSURE CONTROL VALVE
5. DUMP VALVE
6. RATE OF RISE CONTROL
7. HIGH PRESSURE CONTROL VALVE
8. ON-OFF SWITCH

Fig.1- The Semi-automatic Press (Left Elevation) F-2/31

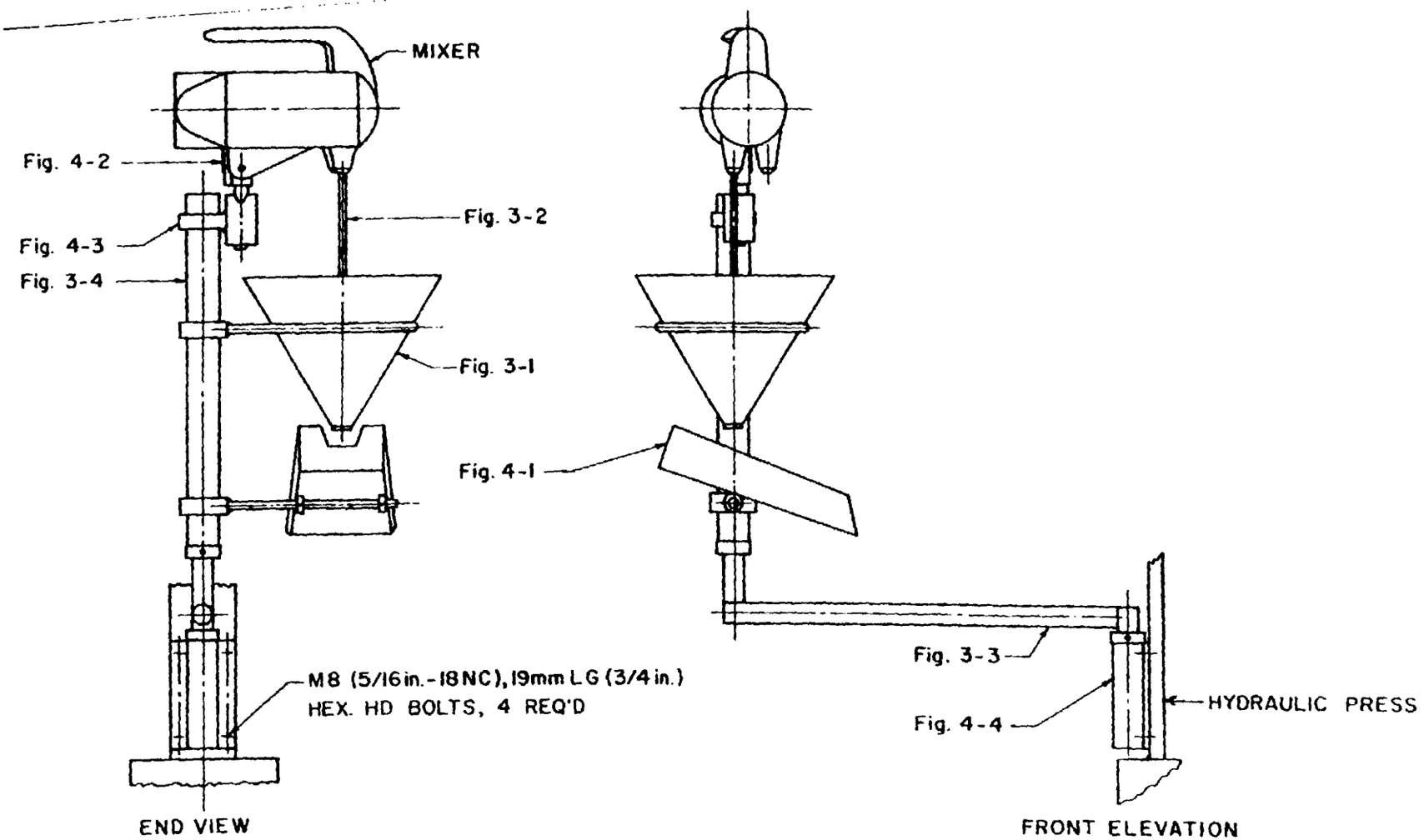

Fig.2- Wet Mixer Assembly

ST0720611

F-2/32

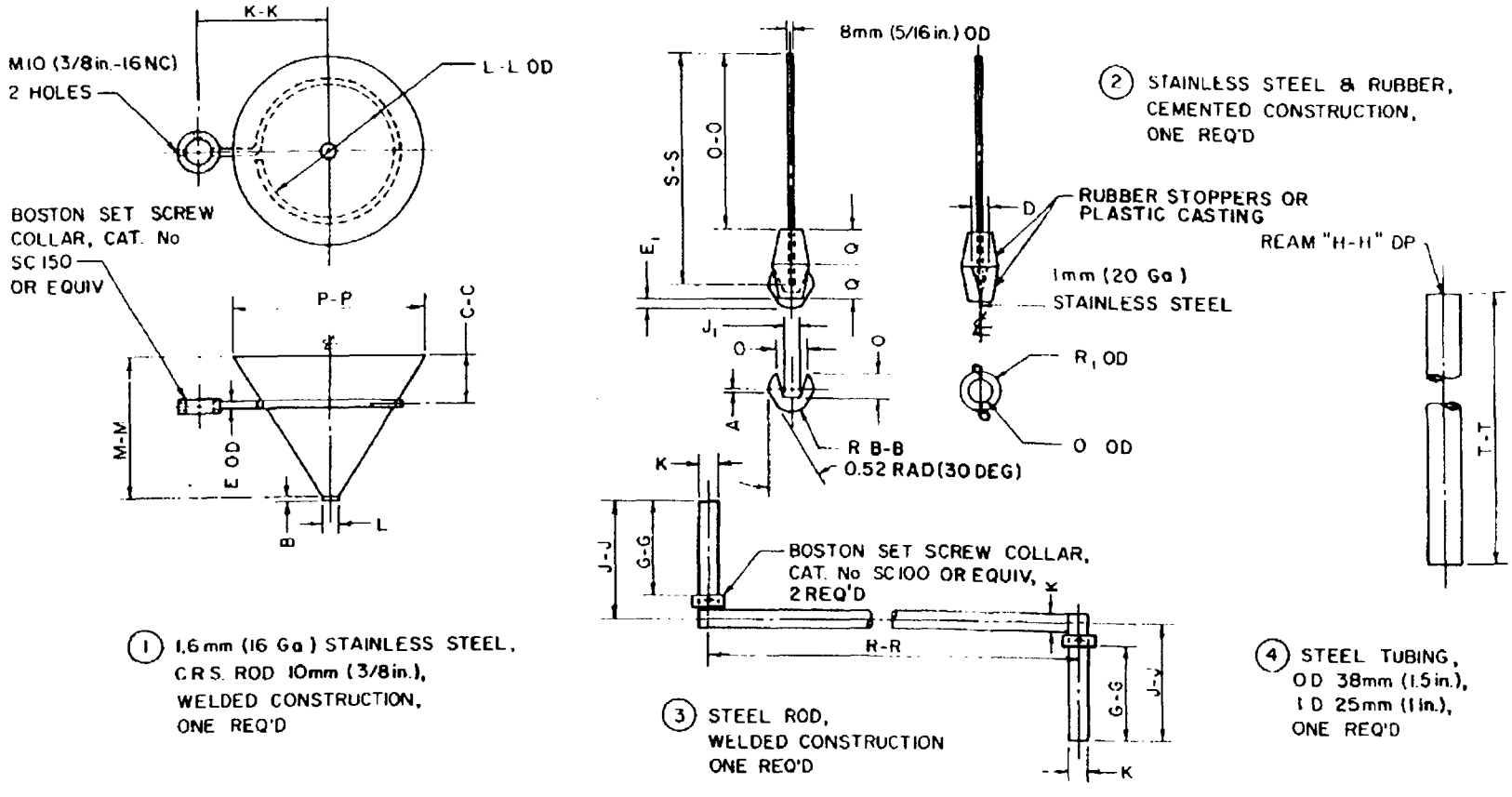

(1) 1.6mm (16 Ga) STAINLESS STEEL, C.R.S. ROD 10mm (3/8in.), WELDED CONSTRUCTION, ONE REQ'D

(2) STAINLESS STEEL & RUBBER, CEMENTED CONSTRUCTION, ONE REQ'D

(3) STEEL ROD, WELDED CONSTRUCTION ONE REQ'D

(4) STEEL TUBING, O.D. 38mm (1.5in.), I.D. 25mm (1in.), ONE REQ'D

LEGEND

DIMENSION	mm	INCH	DIMENSION	mm	INCH	DIMENSION	mm	INCH
A	3.5	1/8	O	38	1-1/2	K-K	165	6-1/2
B	5	3/16	Q	46	1-13/16	L-L	170	6-11/16
D	18	23/32	R_1	48	1-57/64	M-M	180	7-3/32
E	10	3/8	B-B	62	2-7/16	O-O	230	9
E_1	10	25/64	C-C	63	2-1/2	P-P	240	9-7/16
J_1	23	29/32	G-G	130	5	R-R	290	11-1/2
K	25	1	H-H	155	6	S-S	310	12
L	28	1-1/16	J-J	160	6-1/4	T-T	420	16-1/2

Fig.3- Wet Mixer Details

ST0720612

F-2/33

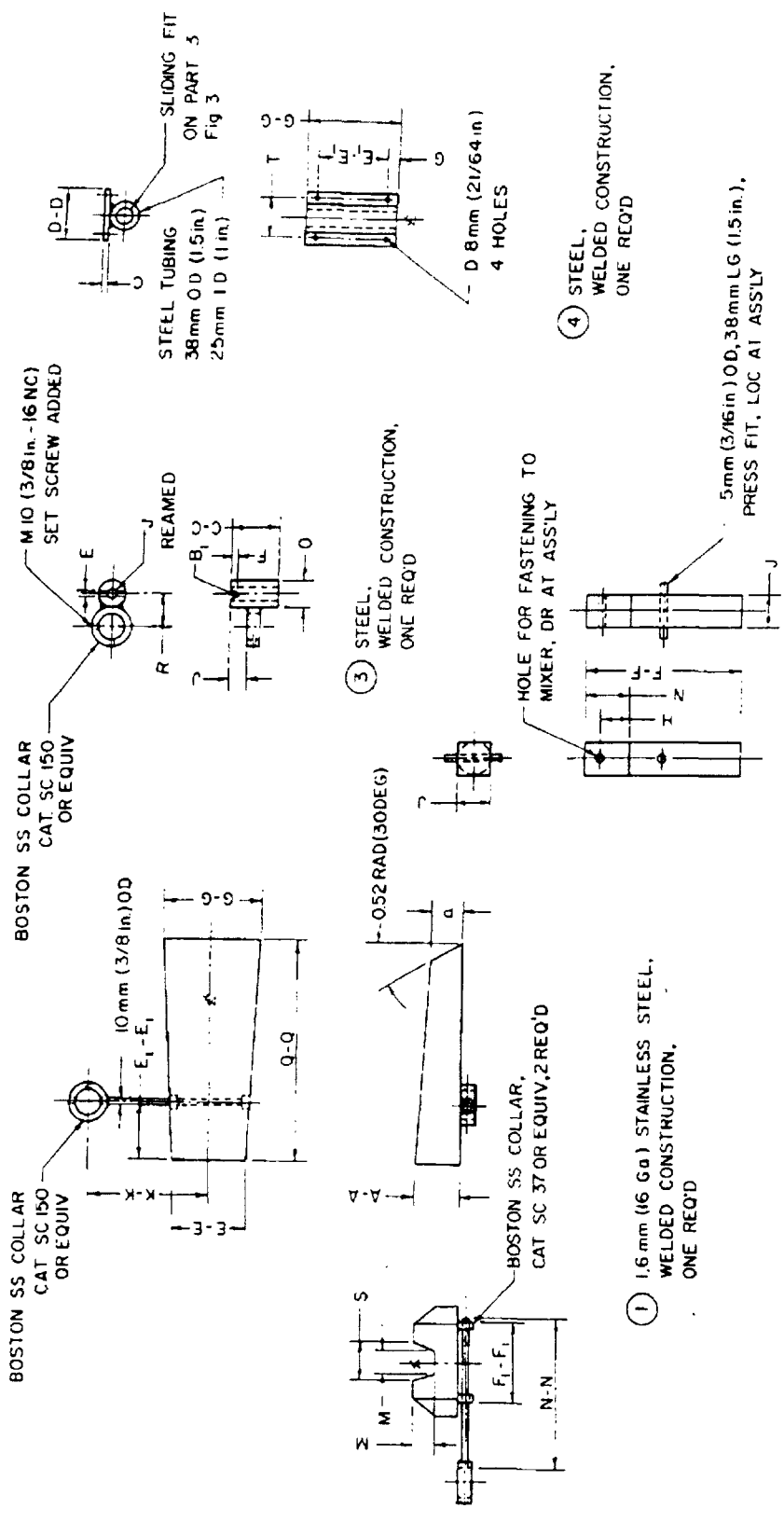

LEGEND

DIMENSION	mm	INCH
B_1	5	3/16
C	6	1/4
E	10	3/8
F	11	7/16
G	13	1/2
H	20	3/4
J	22	7/8
M	30	1-3/16
N	32	1-1/4

DIMENSION	mm	INCH
O	38	1-1/2
P	44	1-3/4
R	48	1-7/8
S	50	1-31/32
T	58	2-1/4
A - A	60	2-23/64
C - C	63	2-1/2
D - D	78	3
E - E	100	3-15/16

DIMENSION	mm	INCH
$E_1 - E_1$	100	4
$F_1 - F_1$	105	4-1/8
F - F	110	4-1/4
G - G	130	5
K - K	165	6-1/2
N - N	200	8
Q - Q	250	10

Fig.4 - Additional Wet Mixer Details

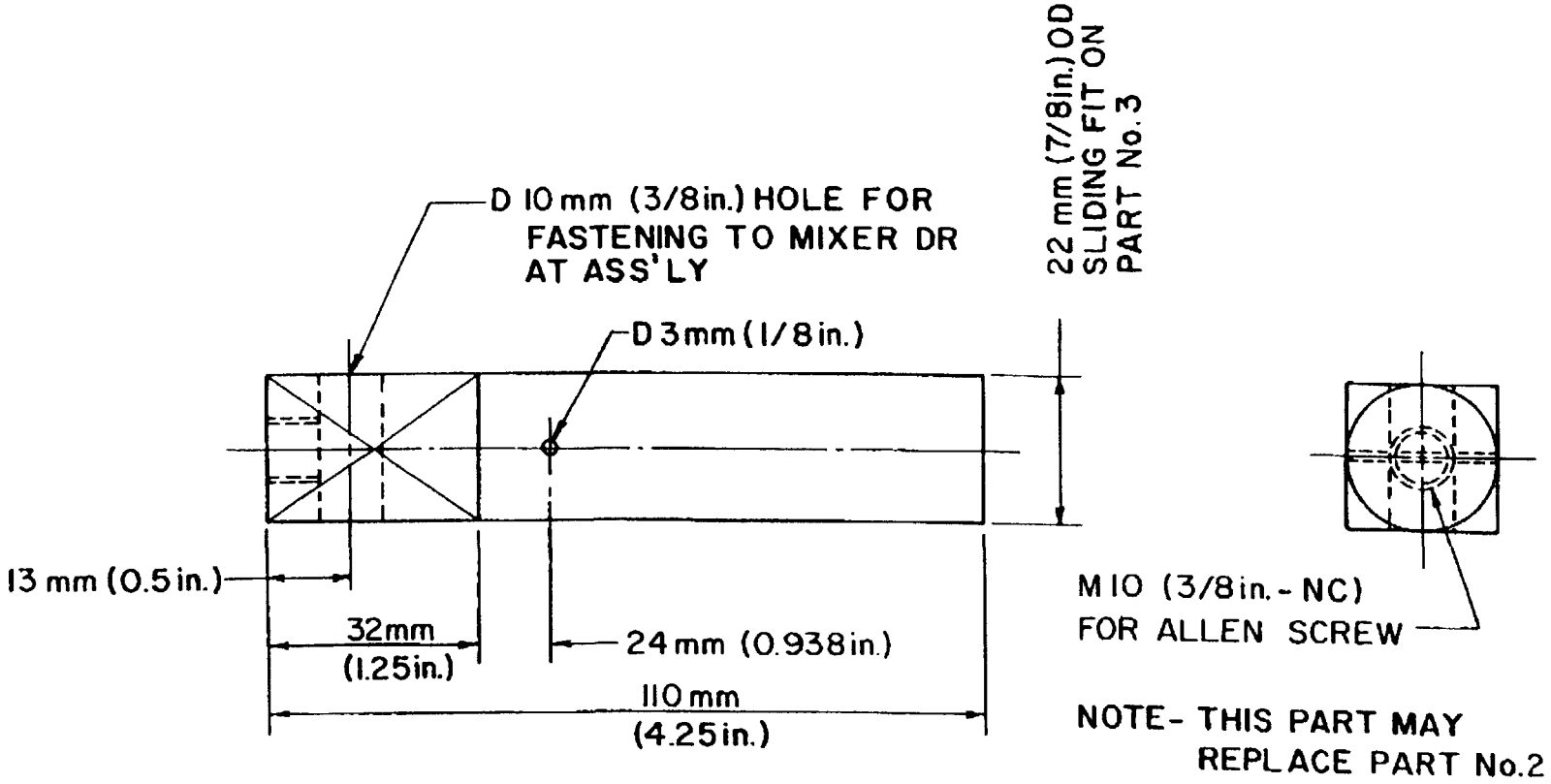

ST0720614

F-2/35

Fig. 5 - Modified Motor Mount for Alternative Wet Mixer

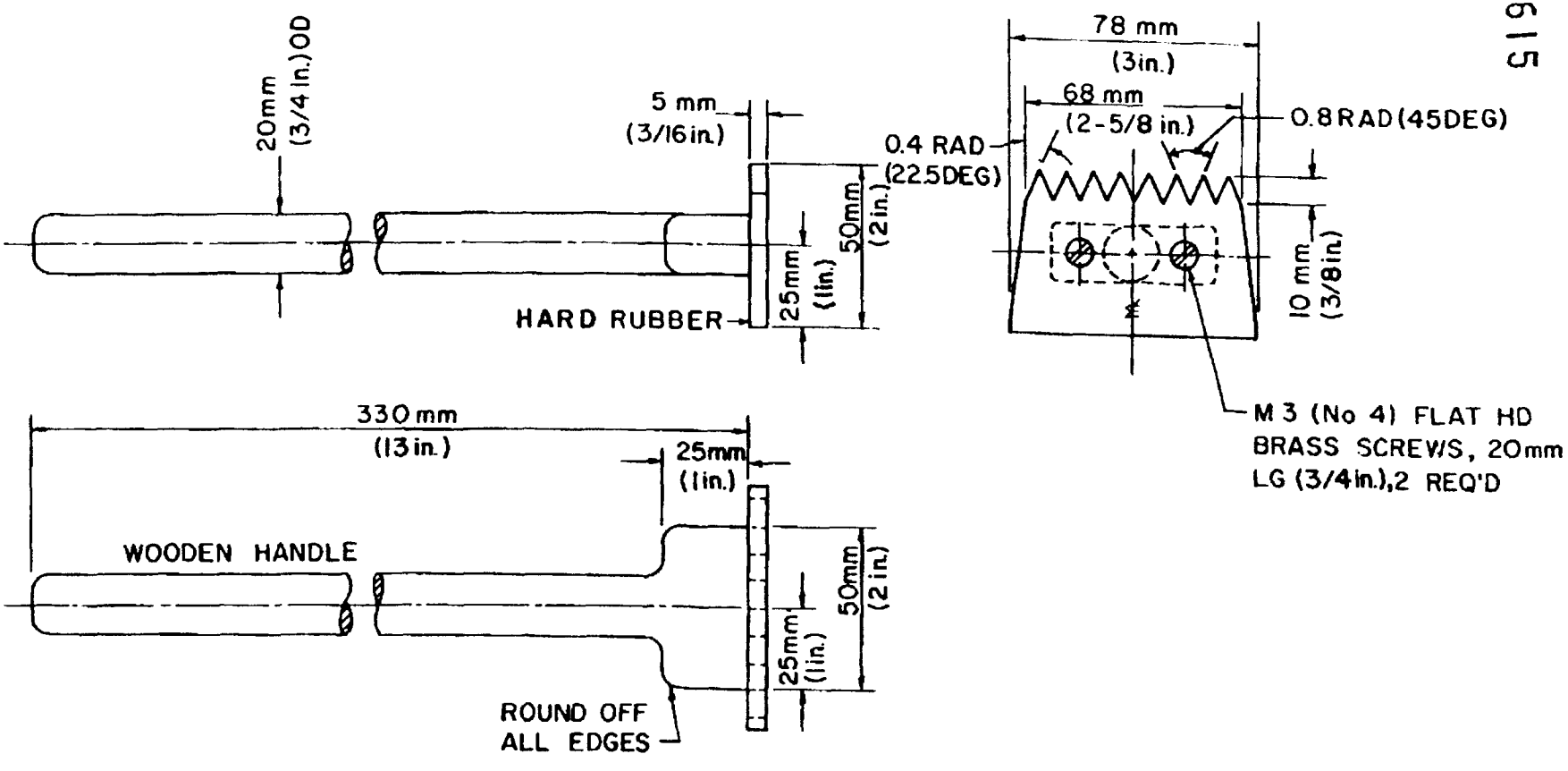

F-2/36

Fig.6- Rubber Hoe

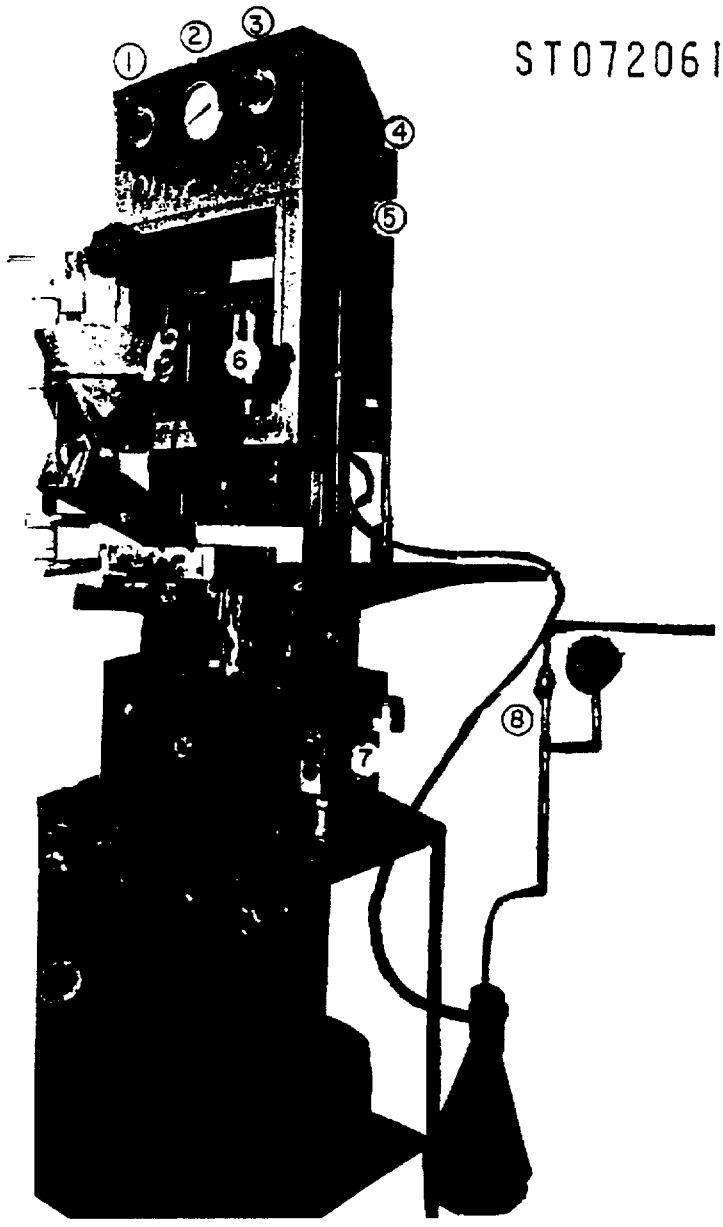

LEGEND

1- Low pressure timer (No.1)
2- Pressure gauge
3- High pressure timer (No.2)
4- Lower limit switch
5- Top limit switch
6- Confining mold drop lever
7- Safety switch
8- Vacuum line

Fig.7- Right View of the Semi-automatic Press F-2/37

ST0720617

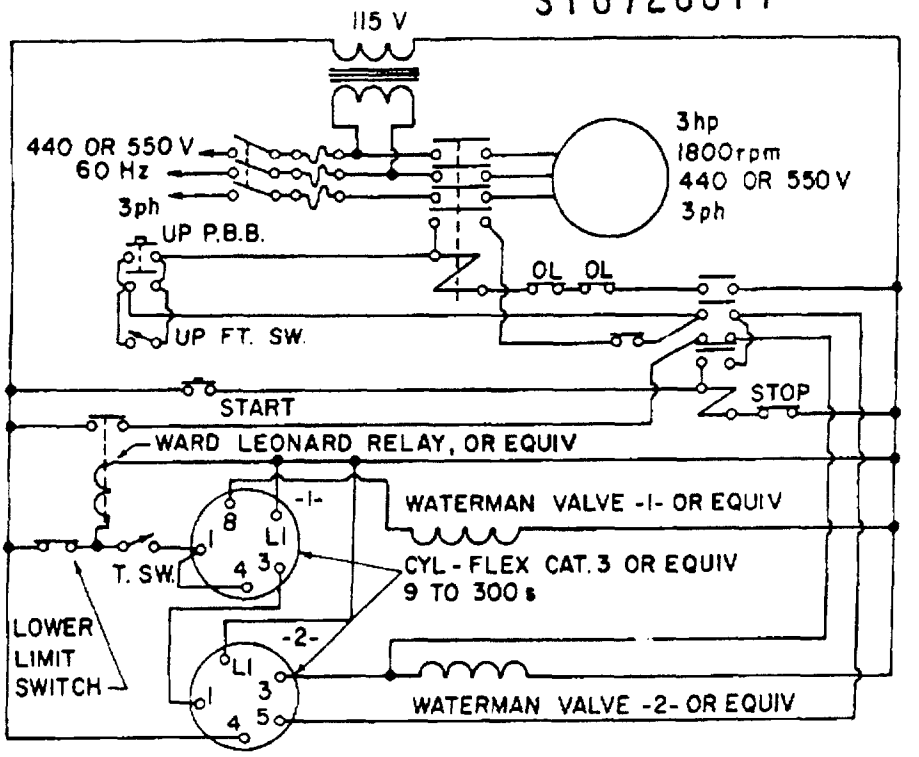

(a) ELECTRIC CONTROL CIRCUIT FOR MODIFIED P.H.I. PRESS

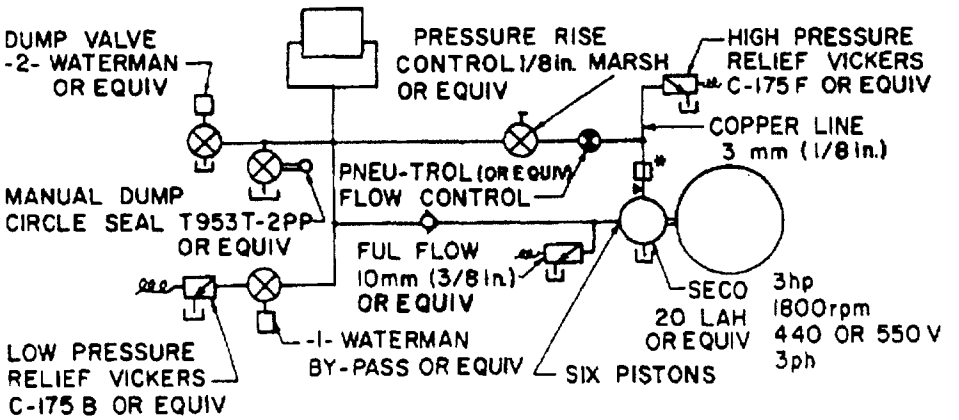

* STEEL COUPLING 19 mm (3/4 in.)

▸ ONE PISTON

NOTE: ALL RELIEF VALVES TO RESERVOIR THROUGH No 200-8 ROSS HEAT EXCHANGER OR EQUIV

(b) HYDRAULIC CONTROL CIRCUIT

Fig.8 - Control Circuit for P.H.I. Press as Modified for F.S.U. Testing

F-2/38

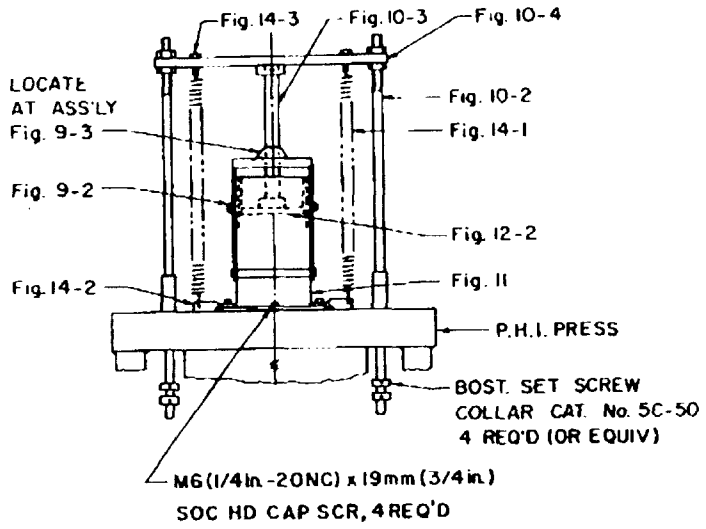

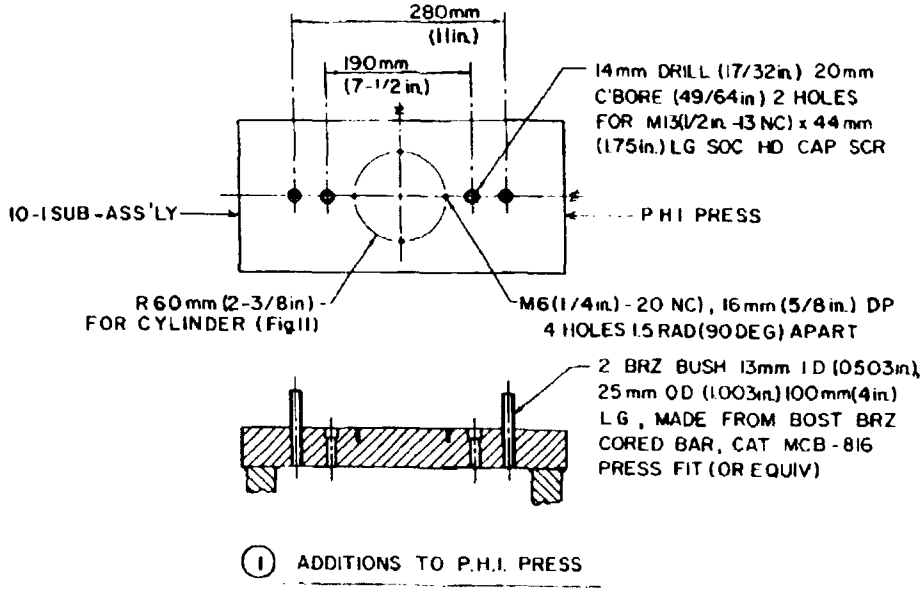

(1) ADDITIONS TO P.H.I. PRESS

ST0720618

HOLDING & LOWERING DEVICE FOR CONFINING MOLD

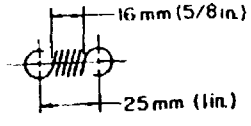

(2) TENSION SPRING - 1.1mm (19 Ga.) MUSIC WIRE, 12 COILS, 6mm I.D (1/4in.), 2 REQ'D

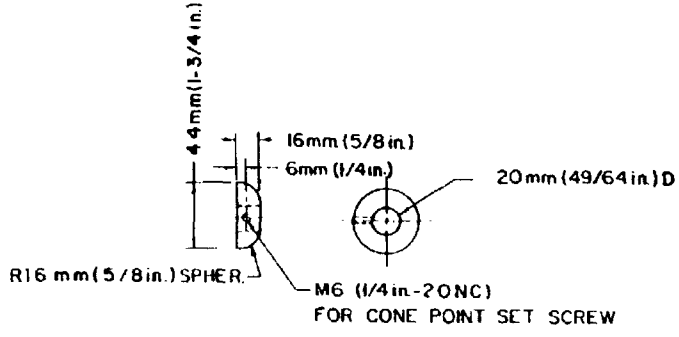

TOOL STEEL, ONE REQ'D

(3) COLLAR

F-2/39

Fig.9 - Holding and Lowering Device Assembly, and Details for Parts 2 and 3 of the Assembly

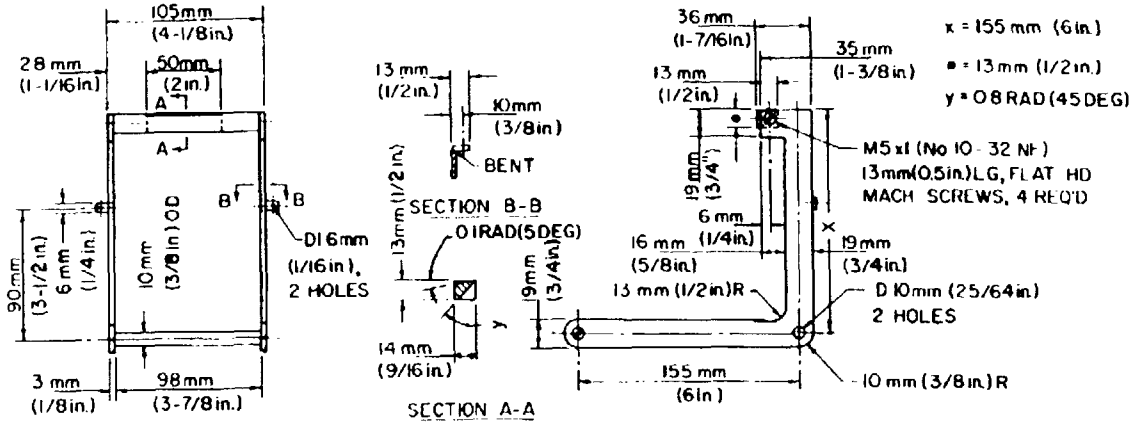

(1) RELEASE LEVER-STEEL, ONE REQ'D

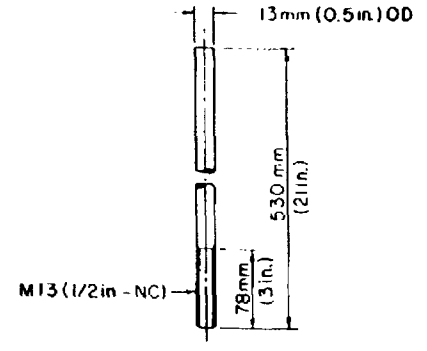

(2) YOKE COLUMN, STEEL ROD, TWO REQ'D

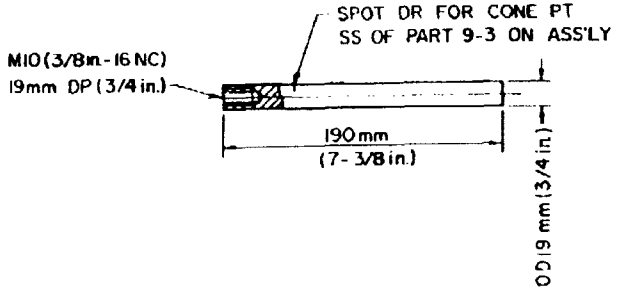

(3) PISTON ROD-STEEL, ONE REQ'D

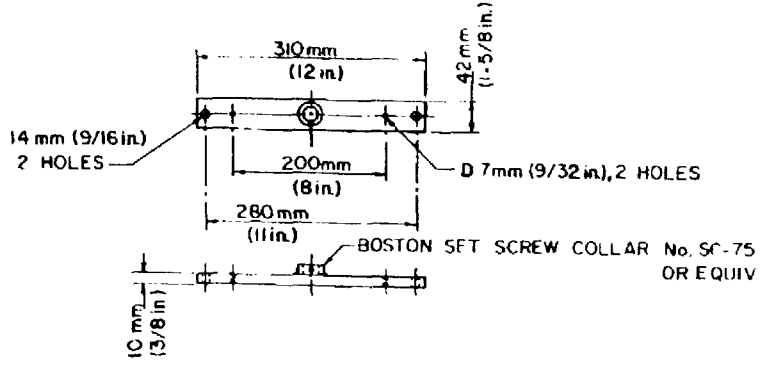

(4) YOKE CROSS BAR-STEEL, WELDED CONSTRUCTION, ONE REQ'D

Fig.10-Holding and Lowering Device Details

F-2/40

ST0720619

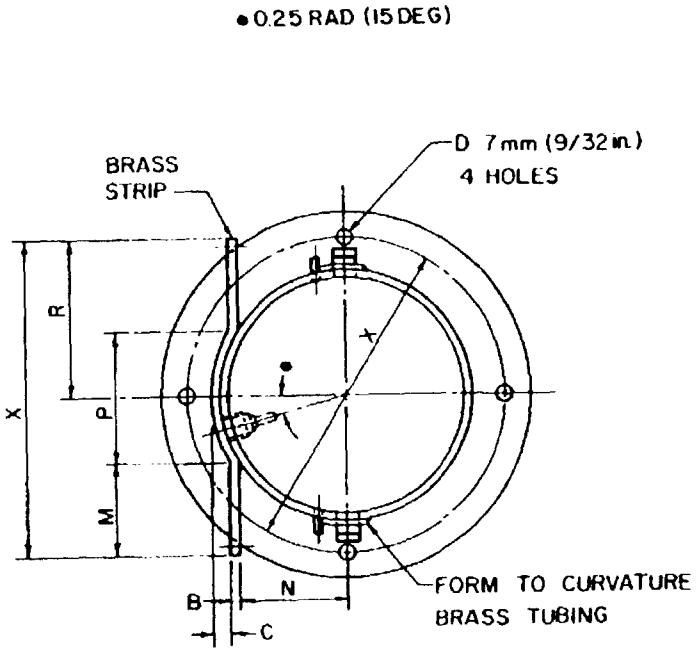

CYLINDER PLAN VIEW

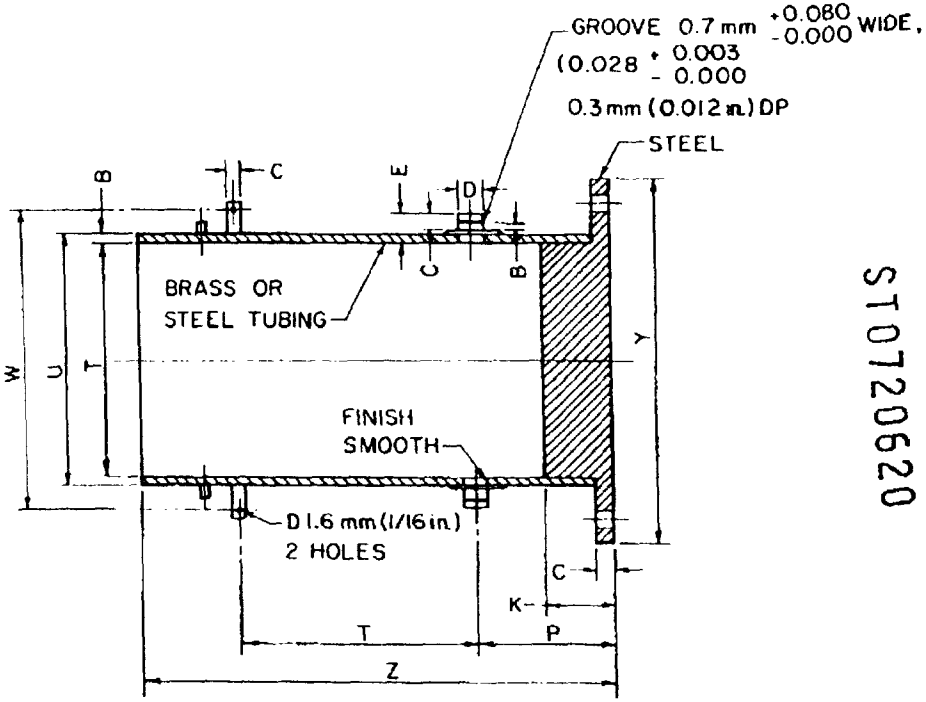

SECTION OF THE CYLINDER

ST0720620

LEGEND

DIMENSION	mm	INCH	DIMENSION	mm	INCH	DIMENSION	mm	INCH
B	3	1/8	M	35	1-3/8	U	95	3-3/4
C	6	1/4	N	42	1-5/8	W	115	4-1/2
D	10	3/8	P	50	2	X	120	4-3/4
E	11	7/16	R	60	2-3/8	Y	140	5-1/2
K	25	1	T	90	3-1/2	Z	180	7

F-2/41

Fig.11- Holding and Lowering Device Cylinder

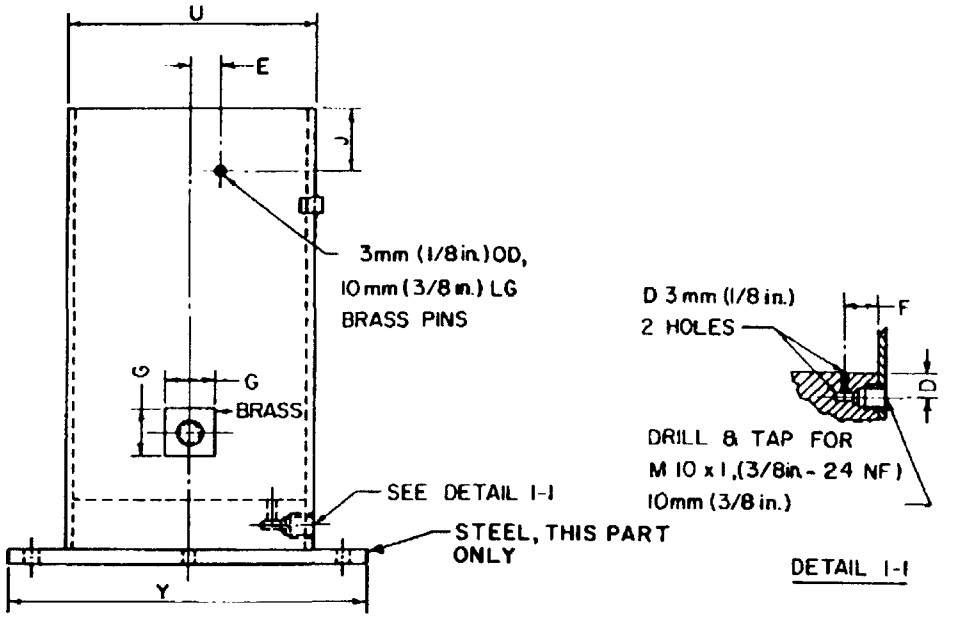

(1) RIGHT SIDE ELEVATION OF CYLINDER - BRASS & STEEL, SILVER SOLDER CONSTRUTION, ONE REQ'D

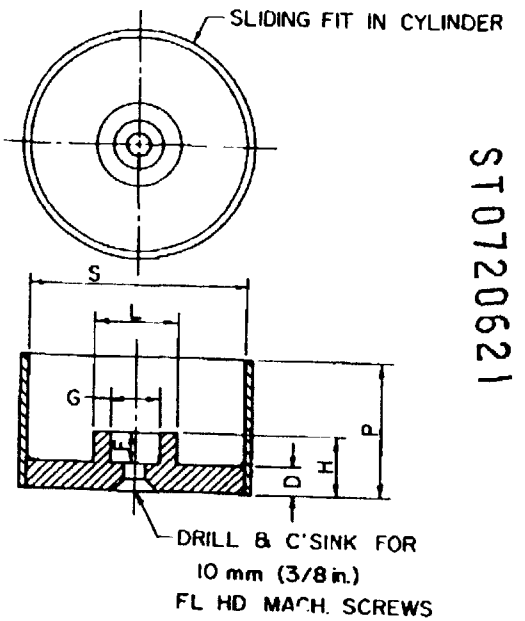

(2) PISTON - BRASS, SILVER SOLDER CONSTRUCTION, ONE REQ'D

ST0720621

LEGEND

DIMENSION	mm	INCH	DIMENSION	mm	INCH	DIMENSION	mm	INCH
D	10	3/8	H	22	7/8	S	82	3-1/4
E	11	7/16	J	24	15/16	U	95	3-3/4
F	13	1/2	L	32	1-1/4	Y	140	5-1/2
G	19	3/4	P	50	2			

F-2/42

Fig.12 - Holding and Lowering Device Cylinder and Piston

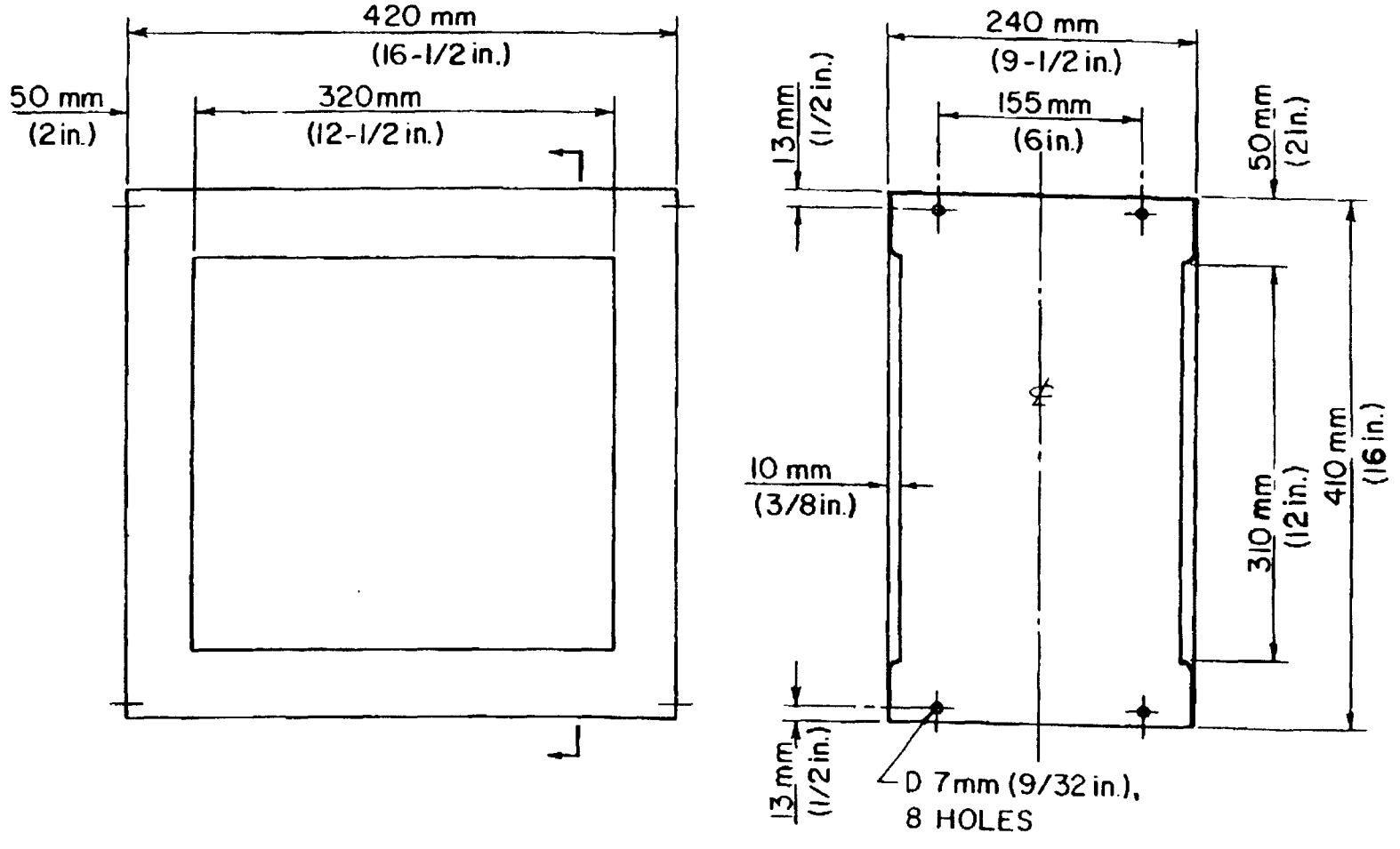

EXTENSION BOX - 1.6 mm (16 Ga) STEEL PLATE,
WELDED CONSTRUCTION,
ONE REQ'D, SUPPLIED WITH PRESS

Fig.13 - Holding and Lowering Device Housing

ST0720622

F-2/43

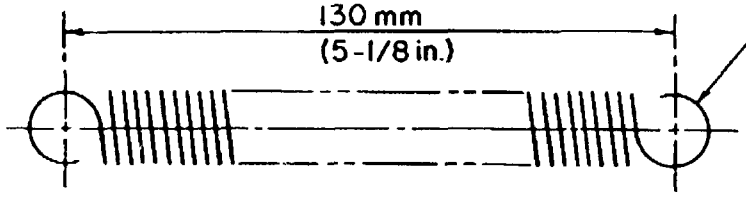

(1) TENSION SPRING - 1mm (0.060 in.) MUSIC WIRE,
77 COILS, 13mm ID (0.5in.), 2 REQ'D

ST0720623

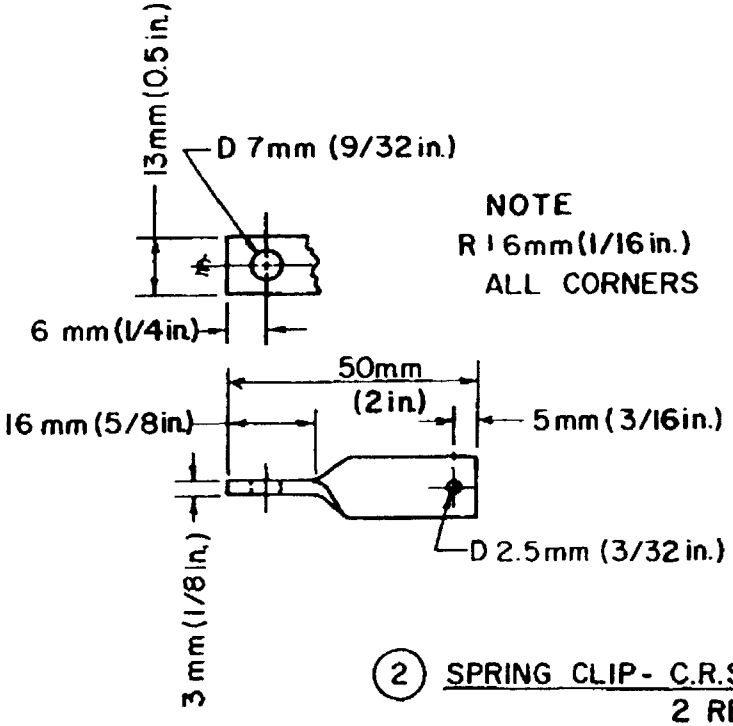

(2) SPRING CLIP - C.R.S.
2 REQ'D

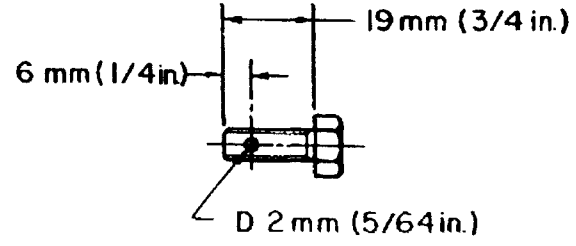

(3) HEX. BOLT - M6 (1/4in-20 NC),
2 REQ'D

F-2/44

Fig.14 - Holding and Lowering Device, Additional Details

Z = D 10 H7 x 16mm DP, 2 HOLES
(0.375in. $^{+0.0006}_{-0.0000}$ x 0.625 in.)
y = M13 (0.5in. - 13NC) x 22mm (7/8in.) DP, 2H
x = 63 H7 (2.500in $^{+0.011}_{-0.000}$)

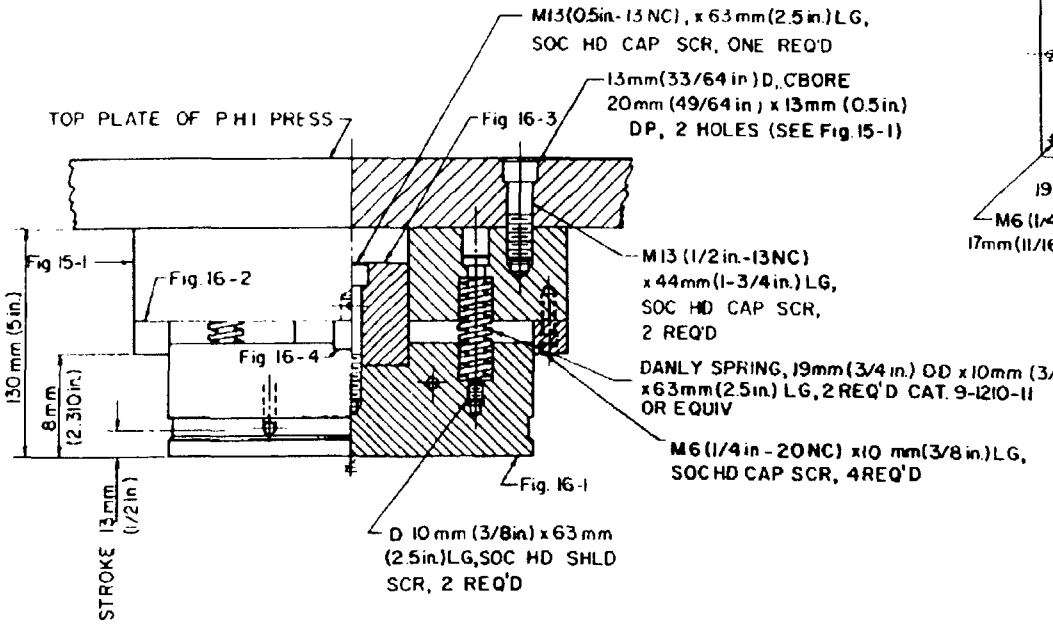

TOP PLATEN SUB-ASSEMBLY

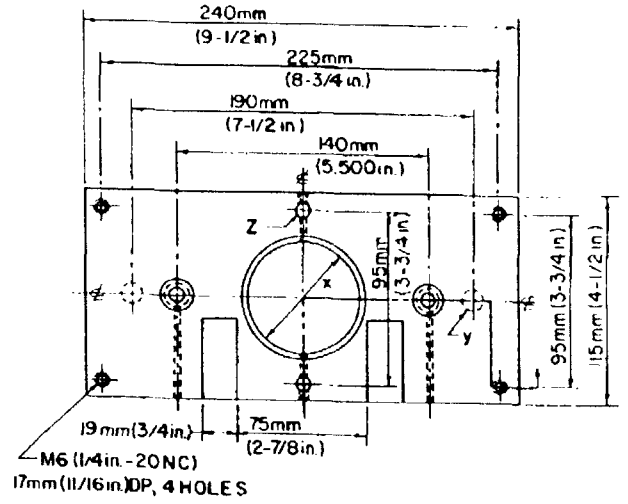

TOP PLATEN HOLDER, PLAN VIEW

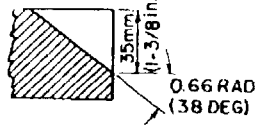

SECTION C-C

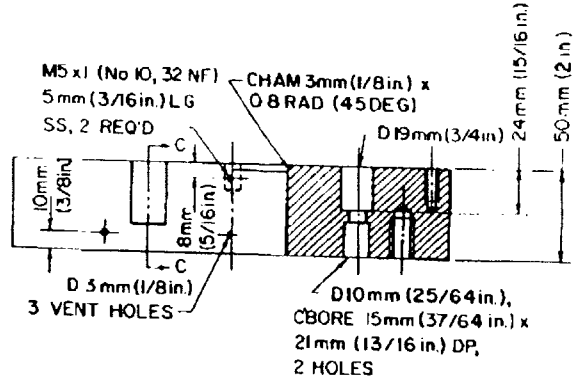

TOP PLATEN HOLDER, END VIEW

(1) TOP PLATEN HOLDER-STEEL, F.A.O. ONE REQ'D

Fig.15-Top Platen Sub Assembly and Part No.1

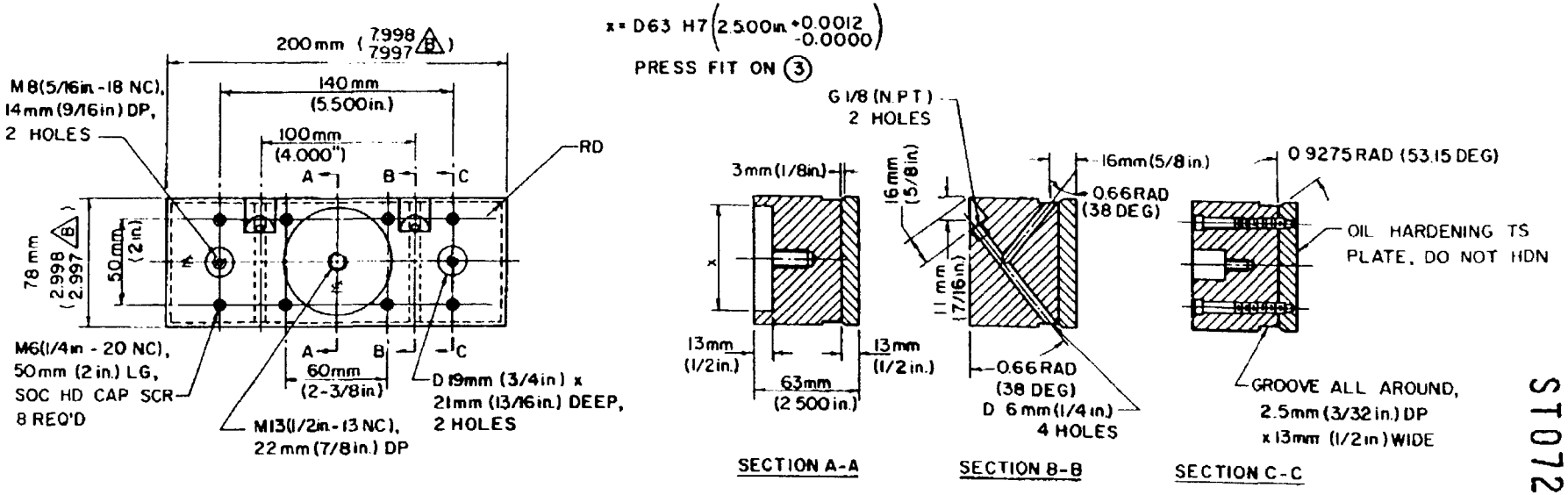

(1) TOP PLATEN SUB-ASS'LY- STEEL, FAO, ONE REQ'D

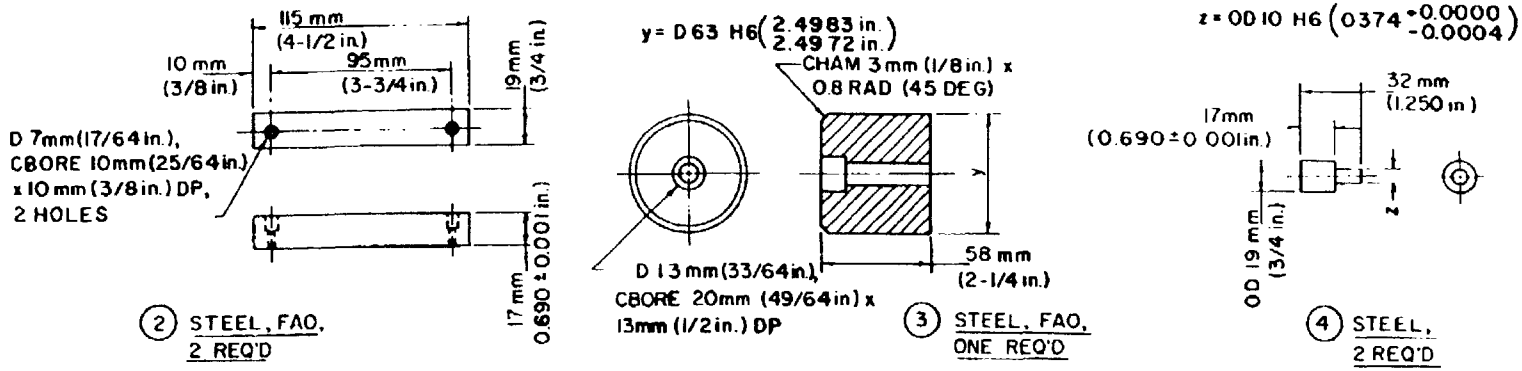

(2) STEEL, FAO, 2 REQ'D

(3) STEEL, FAO, ONE REQ'D

(4) STEEL, 2 REQ'D

Fig.16- Top Platen Details

ST0720625

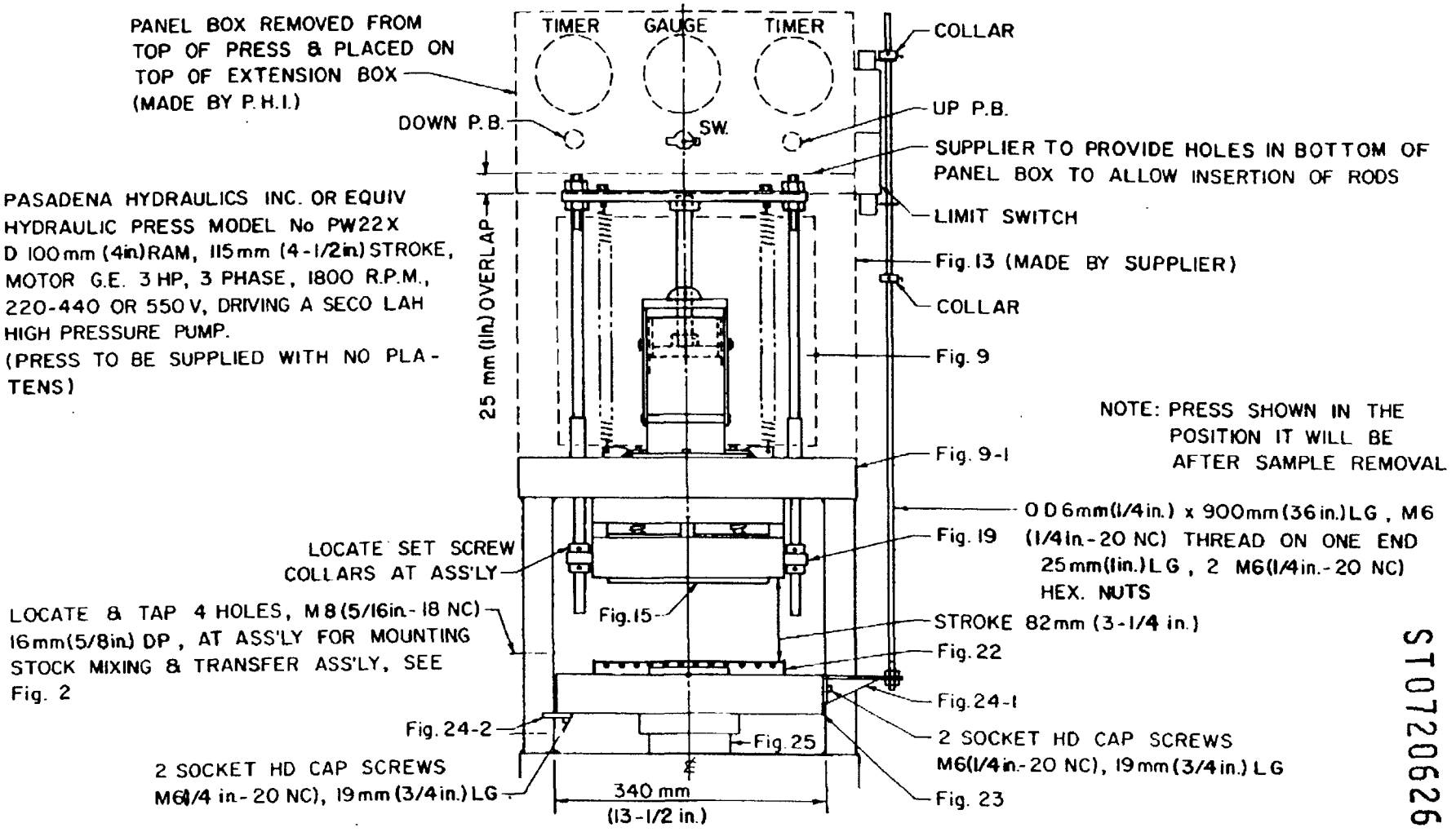

ST0720626

F-2/47

Fig.17- General Press Assembly - Front Elevation

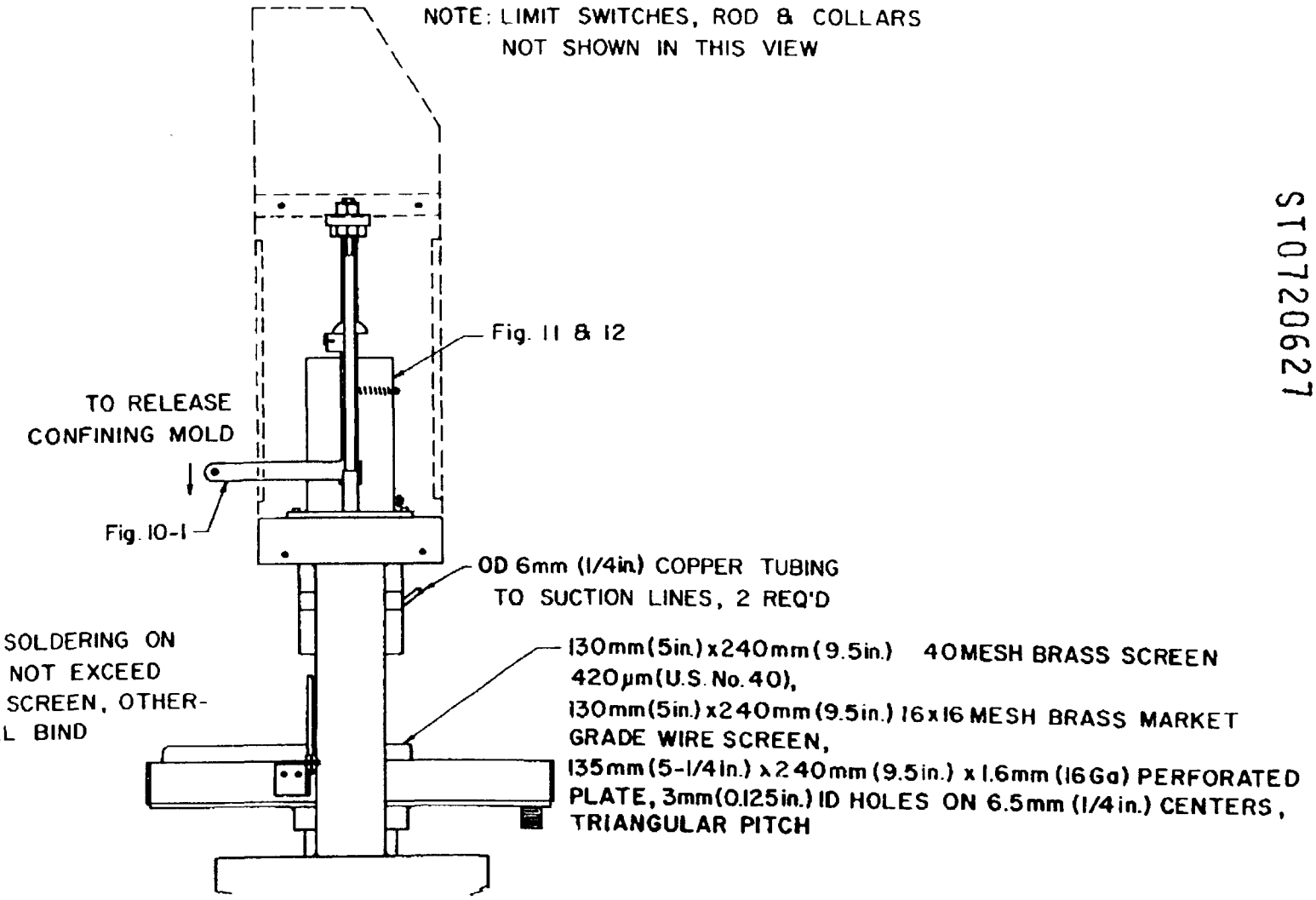

Fig.18-General Press Assembly - Right Elevation

ST0720627

F-2/48

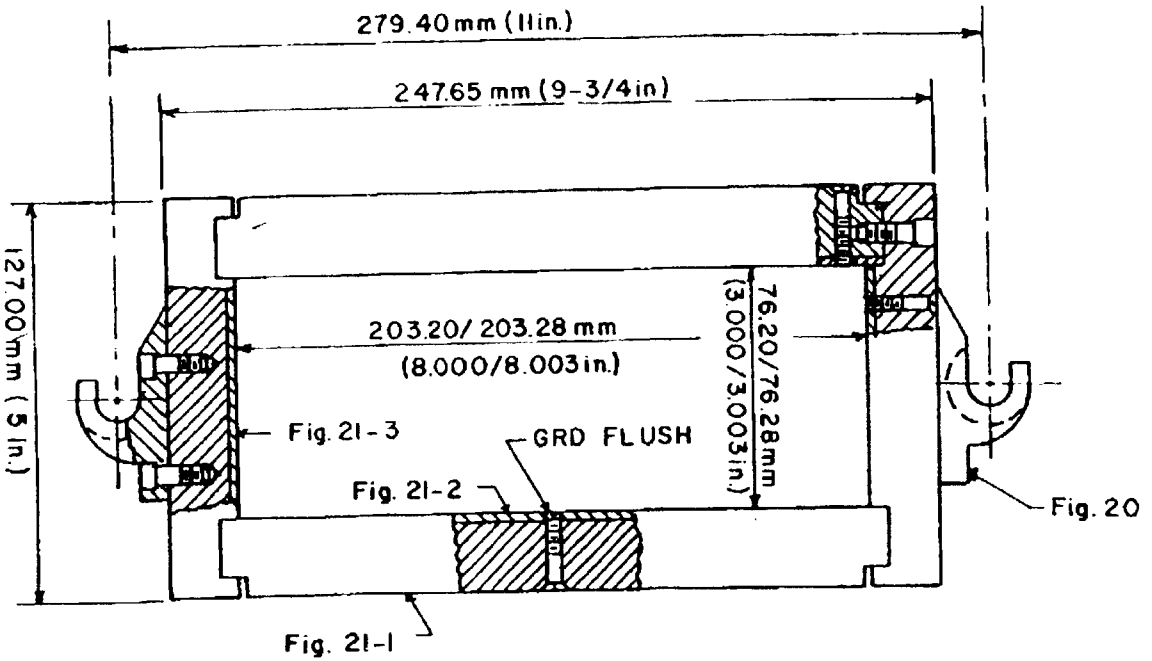

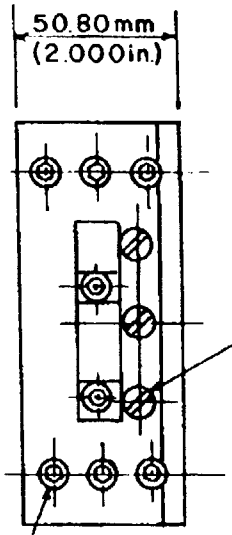

M5 x 1 (No. 10, 32 NF),
22.22 mm (7/8 in.) LG,
FH MACH SCR,
6 REQ'D

M6 (1/4in.-20NC), SOC HD CAP SCR,
19.05 mm (3/4 in.) LG, 8 REQ'D
15.88 mm (5/8 in) LG, 4 REQ'D

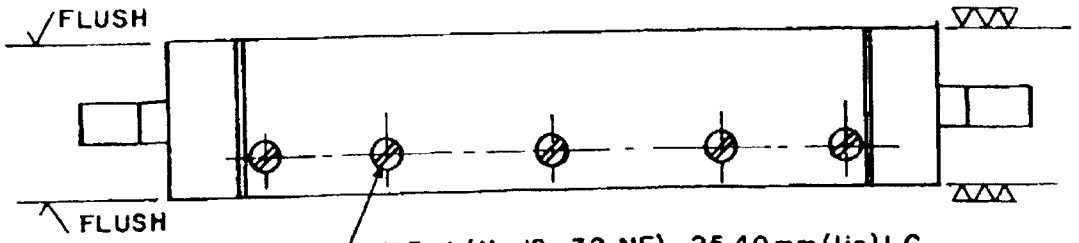

M5 x 1 (No. 10, 32 NF), 25.40 mm (1in.) LG,
FH MACH SCR, 10 REQ'D

CONFINING MOLD - STAINLESS STEEL
& C.R.S.
ONE REQ'D

ST0720628

F-2/49
(REVISED 1976)

Fig. 19 - Confining Mold Assembly

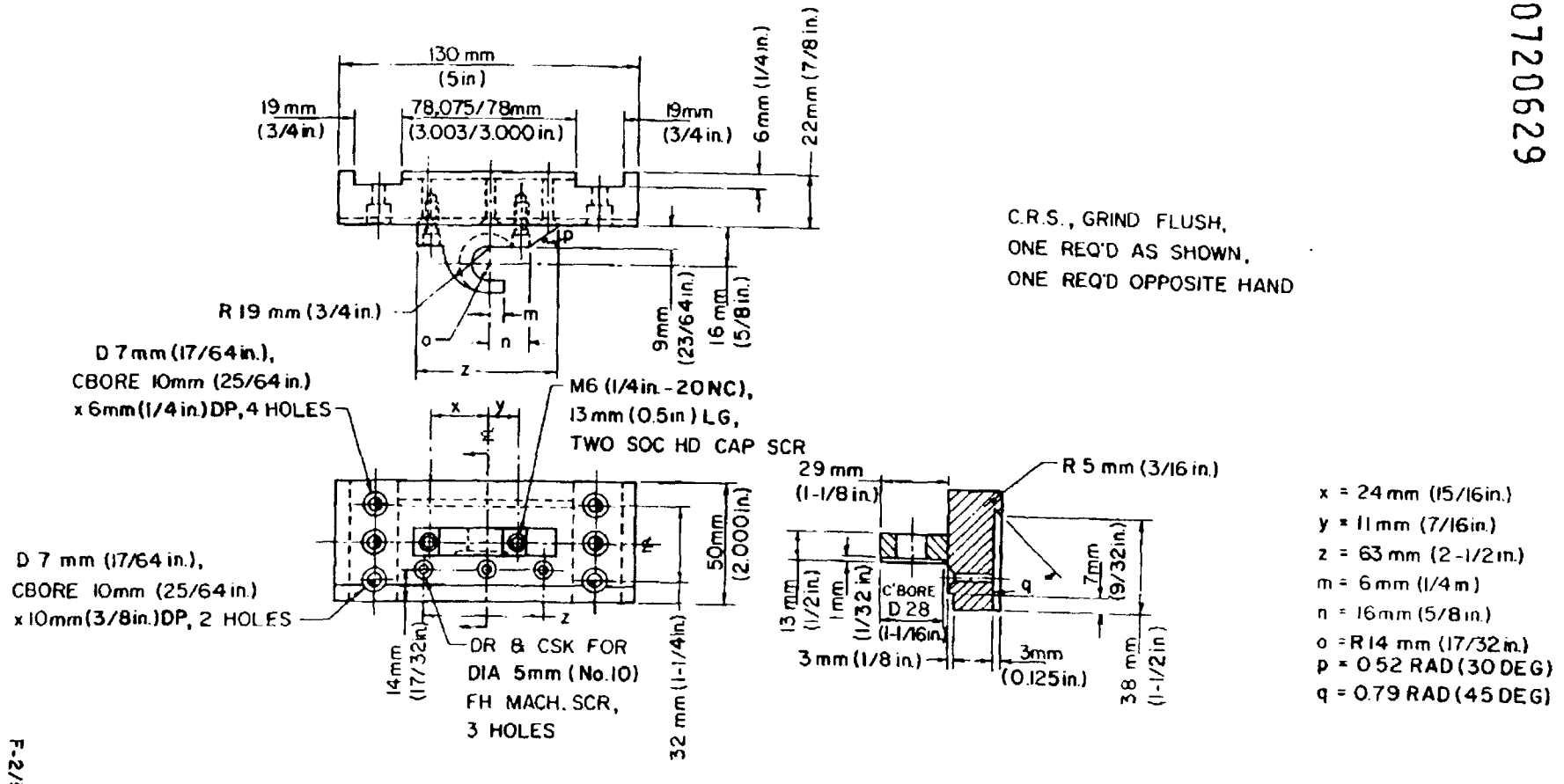

Fig. 20 - Confining Mold Detail

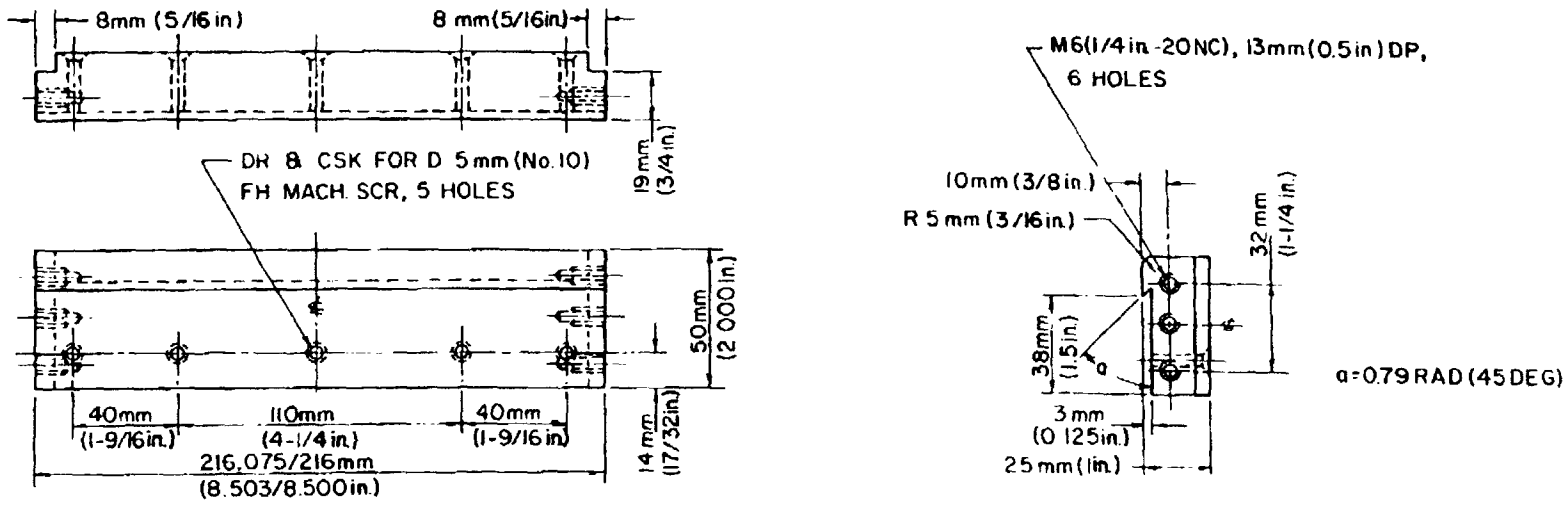

(1) C.R.S., GRIND FLUSH, 2 REQ'D

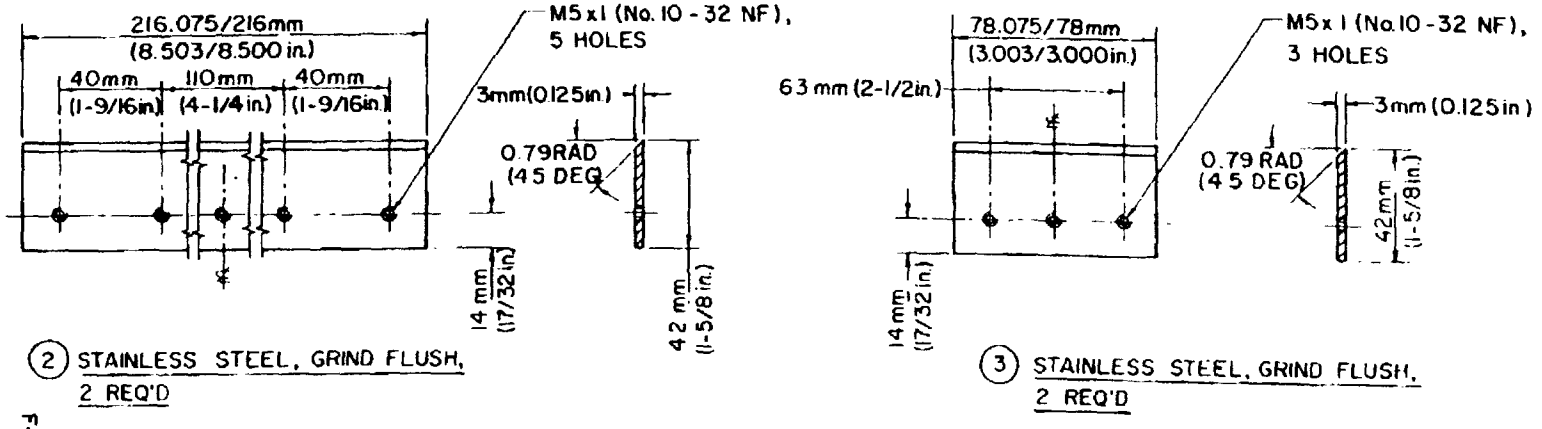

(2) STAINLESS STEEL, GRIND FLUSH, 2 REQ'D

(3) STAINLESS STEEL, GRIND FLUSH, 2 REQ'D

F-2-51

Fig.21- Confining Mold, Additional Detail

ST0720630

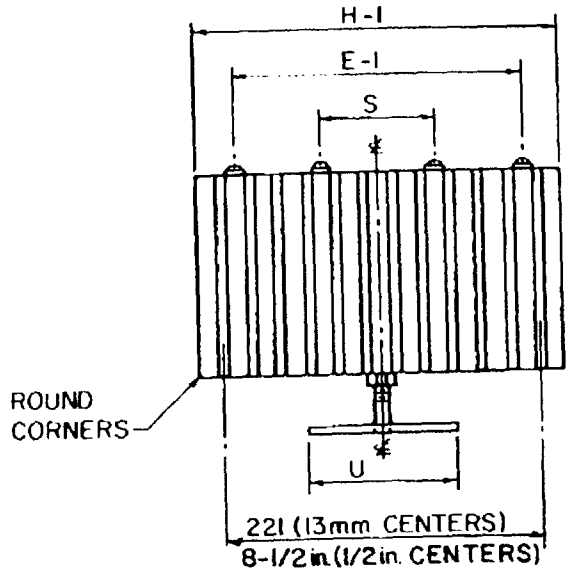

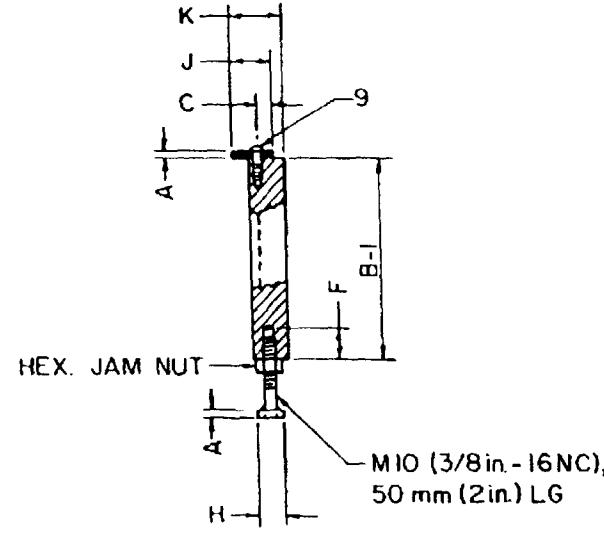

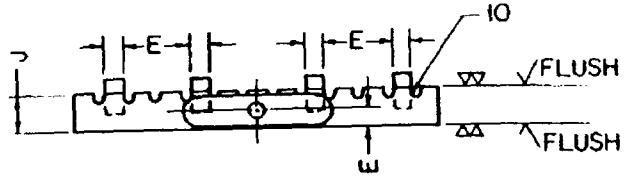

BOTTOM PLATEN - STEEL,
ONE REQ'D

ST0720631

LEGEND

DIMENSION	mm	INCH	DIMENSION	mm	INCH	DIMENSION	SPECIFICATION
A	3	1/8	K	35	1-3/8	9	M5 x 1 No.10-32NF),
C	8	5/16	S	78	3		13mm(1/2in.)LG.
E	13	1/2	U	100	4		RD HD MACH.SCR,
F	16	5/8	B-1	135	5-1/4		4 REQ'D.
H	19	3/4	E-1	180	?	10	18 GROOVES R1.5mm
J	25	1	H-1	240	9-1/2		(1/16in.) x 3mm(1/8in.)DP

F-2/52

Fig.22- Bottom Platen Assembly

ST0720632

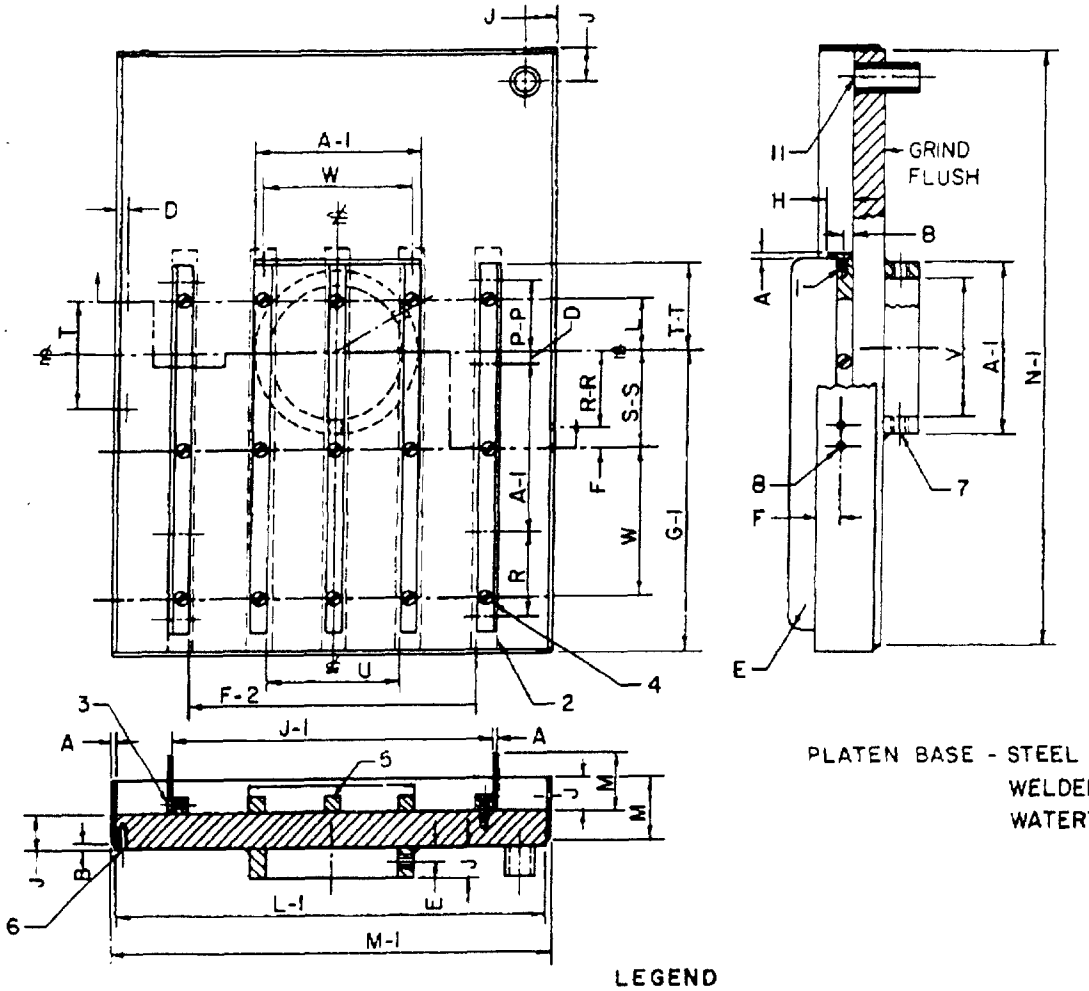

PLATEN BASE - STEEL & BRASS,
WELDED CONSTRUCTION,
WATERTIGHT, ONE REQ'D

LEGEND

DIMENSION	mm	INCH	DIMENSION	mm	INCH	DIMENSION	mm	INCH
A	3	1/8	P-P	54	2-1/8	A-1	130	5
B	6	1/4	R-R	60	2-3/8	F-2	220	8-5/8
D	10	3/8	R	63	2-1/2	G-1	230	9
E	13	1/2	T-T	68	2-5/8	J-1	245	9-5/8
F	16	5/8	S-S	75	2-7/8	L-1	330	13
H	19	3/4	T	82	3-1/4	M-1	335	13-1/4
J	25	1	U	100	4	N-1	450	17-3/4
L	42	1-5/8	V	101	4-1/64			
M	44	1-3/4	W	115	4-1/2			

1. M5 x 1 (No.10-32NF), 13mm (1/2in.) LG, FH MACH. SCR, ENDS OF BARS, 3 REQ'D.
2. 19mm (3/4in.) WIDE PATH FOR BRASS BARS, MACHINED PARALLEL TO BASE OF PLATEN.
3. M5 x 1 (No.10-32NF), 13mm (1/2in.) LG, FH MACH. SCR, 4 REQ'D IN EACH PLATE.
4. M5 x 1 (No.10-32NF), 22mm (7/8in.) LG, FH MACH. SCR, BRASS 15 REQ'D.
5. BRASS BARS, 13mm (1/2 in.) SQ x 280mm (11in.) LG, 5 REQ'D.
6. M6 (1/4-20 NC), 19mm (3/4in.) DP, 2 HOLES.
7. M13 (1/2-13NC), 13mm (1/2 in.) LG 2.1 RAD (120 DEG) APART SET SCR, 2 REQ'D.
8. M6 (1/4-20NC), 2 HOLES
11. 13mm (1/2 in.) NOMINAL CLOSE PIPE NIPPLE, 5mm (2 in.) LG.

Fig. 23- Platen Base Assembly

F-2/53

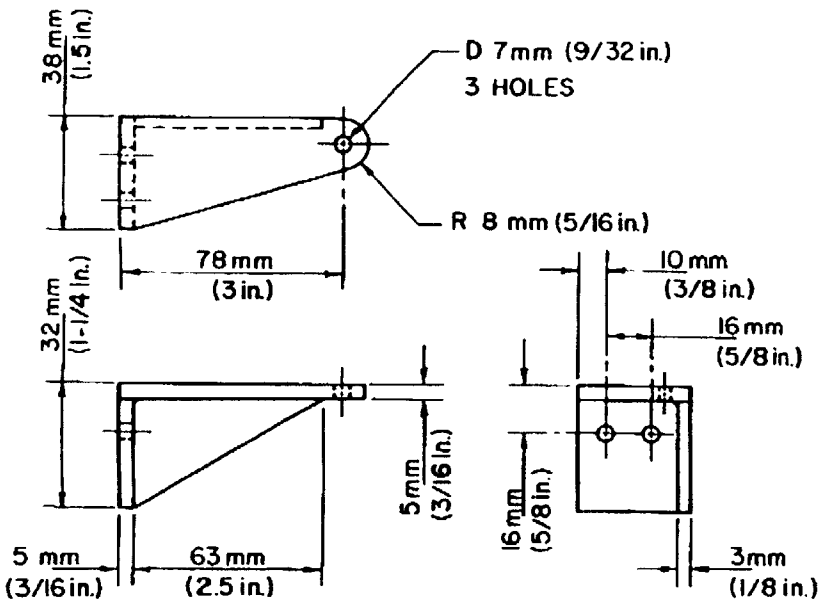

(1) LIMIT SWITCH ROD BRACKET - STEEL, WELDED CONSTRUCTION, ONE REQ'D

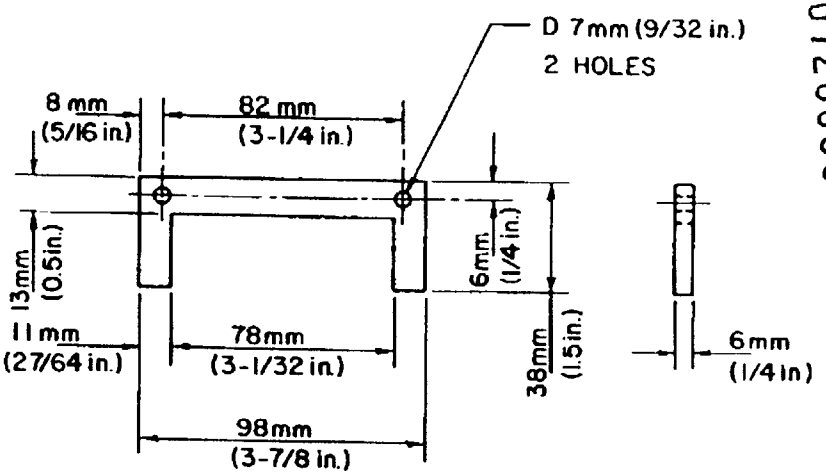

(2) GUIDE - BRASS, ONE REQ'D

Fig.24- Platen Base Detail

ST0720633

F-2/54

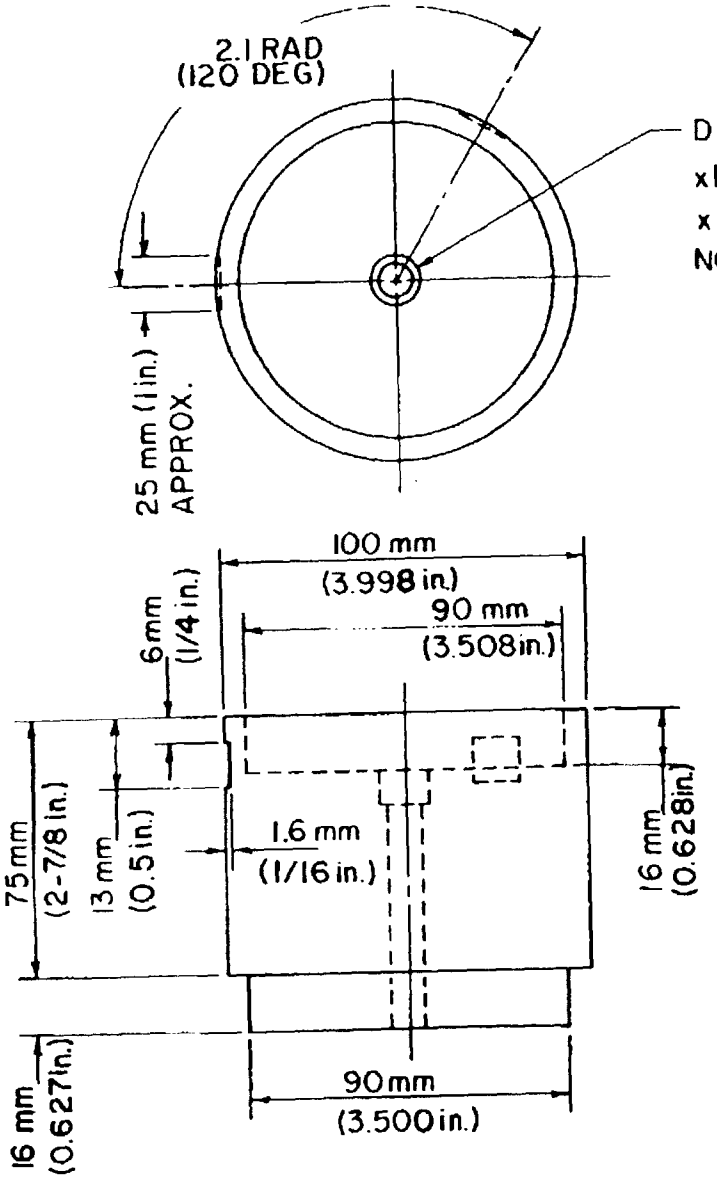

D 10mm (25/64 in.), 15 mm (37/64 in.) C'BORE,
x 10 mm (3/8 in.) DP , FOR M10 (3/8 in.-16NC)
x 78 mm (3 in.) LG SOCKET HD CAP SCREW
NOTE: TAP A HOLE FOR M10 (3/8 in.-16NC)
x 16 mm (5/8 in.) DEEP IN
PRESS PISTON TO MOUNT THIS EX-
TENSION

PISTON EXTENSION - STEEL SHAFTING,
ONE REQ'D

Fig. 25- Platen Base; Additional Detail

F-2/55

ST0720634

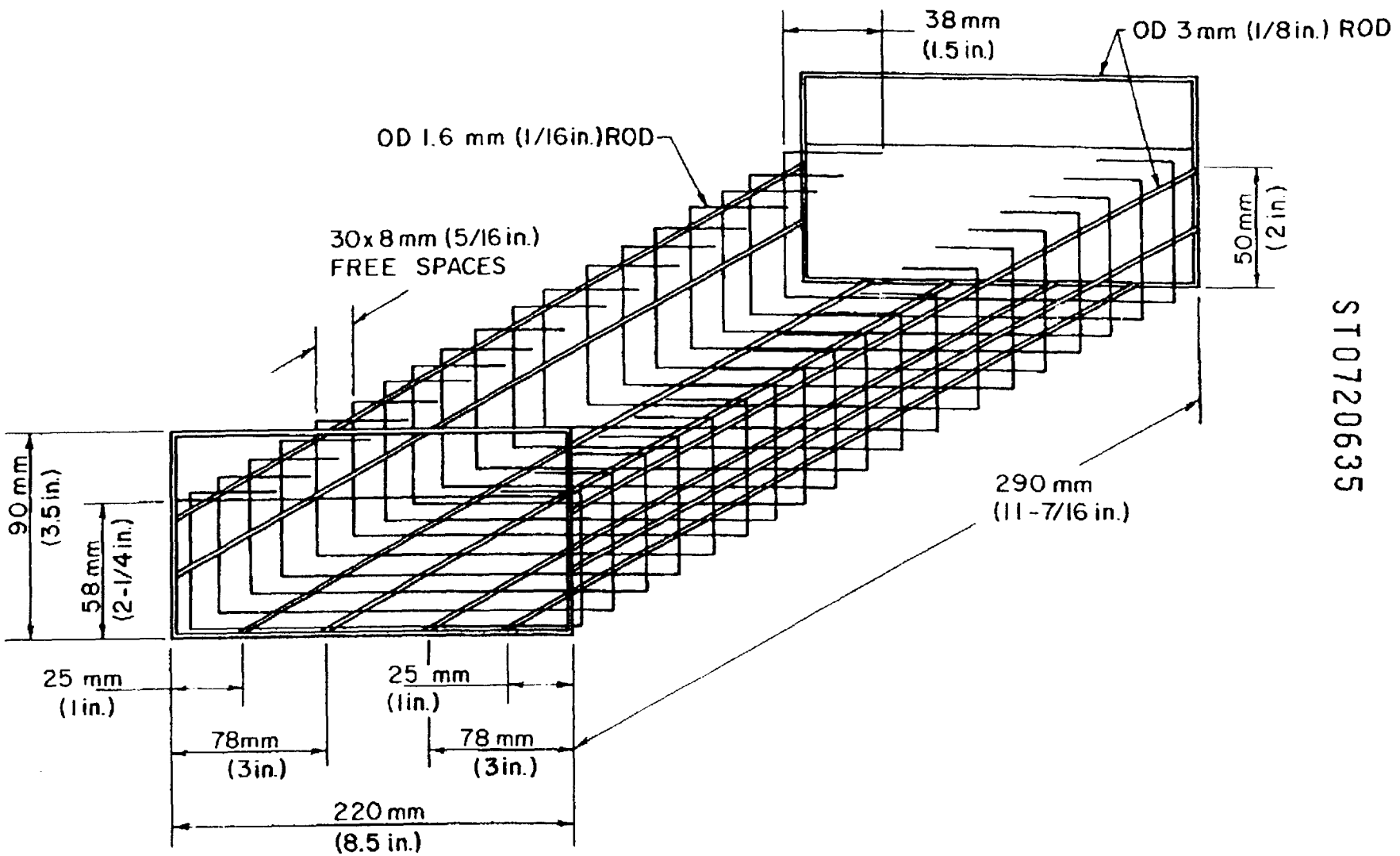

ST0720635

F-2/56

Fig. 26 - Specimen Basket

ST0720636

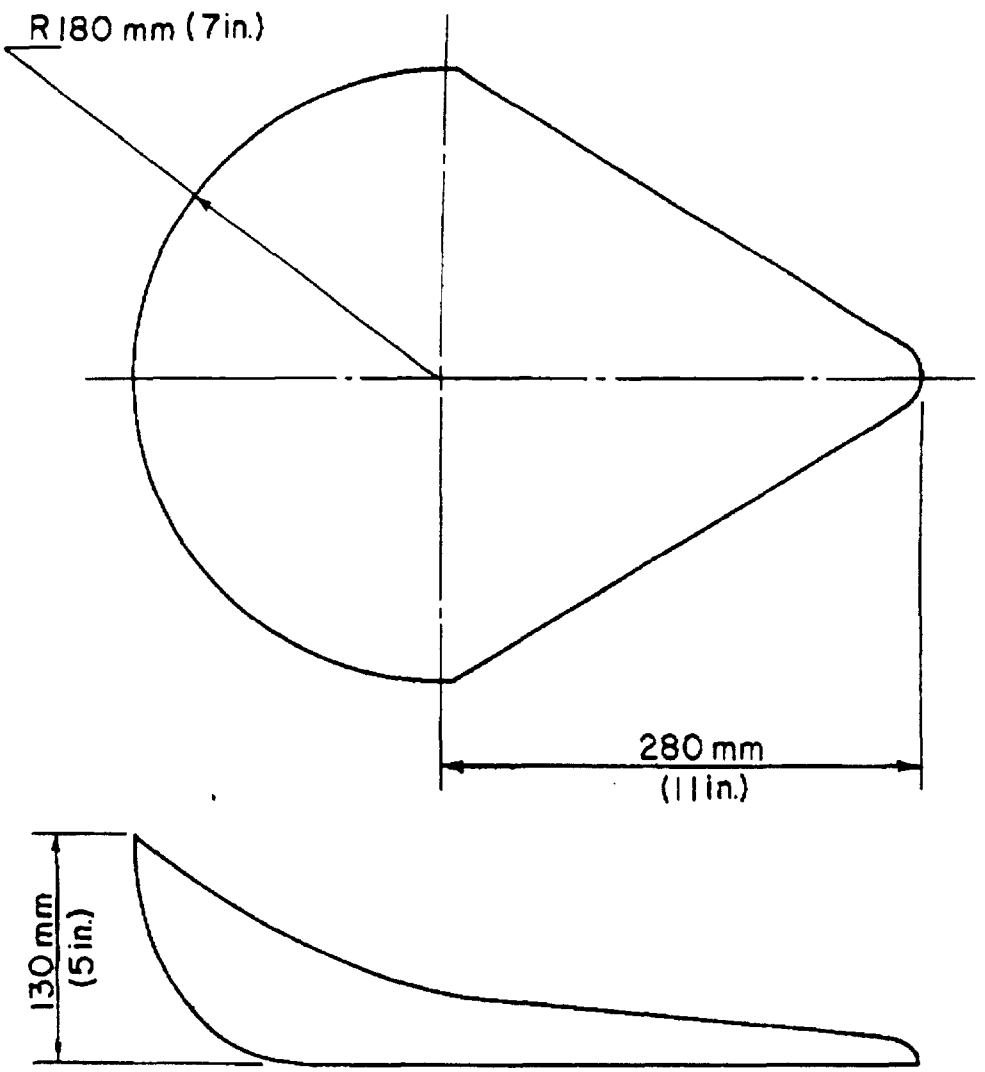

Fig. 27 - Fiberizer Feeding Pan F-2/57

F
3

0636.A

Chrysotile Asbestos Test Manual

Third edition

ST0720637

F-3-74

STRENGTH IN ASBESTOS-CEMENT PRODUCTS

Revised and adopted by:

Asbestos Textile Institute - 28 Feb 1974

Quebec Asbestos Mining Association - ...

Printed in USA

ST0720638

F-3

STRENGTH IN ASBESTOS-CEMENT PRODUCTS

Scope

To determine the reinforcing value of asbestos fibres in asbestos-cement relative to a fibre chosen as "standard."

Apparatus

1. Mixing Equipment - Patterson-Kelley Model LB-558 laboratory blender complete with two one-quart and one two-quart plastic shells.

2. Vacuum System - As detailed in Figure No. 1.

3. Vacuum Pump - "Cenco Pressovac 4" or equivalent. An air aspirator (as detailed in Figure No. 2), connected to a compressed air line through a pressure reducing valve, may be used in place of the vacuum pump.

4. Mold Assembly - As detailed in Figure No. 3.

5. Hydraulic Press - 10-ton Carver, laboratory model.

6. Humidity Cabinet - Designed for saturated atmosphere at ambient temperature. (A Harshaw No. H-18877 Stainless Steel desiccating cabinet has been found satisfactory for this purpose).

7. Laboratory Autoclave - Capable of maintaining a saturated steam pressure of 125 pounds per square inch gauge.

8. Drying Oven - Standard gravity convection type, capable of maintaining 220 degrees Fahrenheit plus or minus 5 degrees.

9. Flexural Tester - With five inch span and capable of close readings in the zero to 300 pound range. (A 300 pound proving ring assembly with continuous reading dial, used in conjunction with a Carver press, has been found preferable to other testing devices).

10. Laboratory Balance - Capable of weighing 500 grams to 0.1 gram.

11. Graduated Cylinder - 1000 ml capacity.

12. Filter Paper - 15 cm circular, Whatman No. 40 and Whatman No. 50.

13. Beaker - 5500 ml, stainless steel.

14. Plexiglas Squares - 7 inches x 1/8 inch thick.

15. Glass Jars - Wide mouth, screw cap, 32 ounce capacity.

16. Spatula - Stainless Steel, with narrow blade.

17. Thermometer - Range minus 4 to plus 220°F in two degrees.

18. Stop Watch

Raw Materials

1. Obtain 1000 pounds each of Portland cement and 90-200 mesh pulverized silica. These materials, which will serve as standards, should be thoroughly mixed and stored in air-tight containers.

2. Obtain 250 pounds of asbestos fibre (preferably an asbestos-cement 3-grade) and prepare in an appropriate manner. This fibre, which will serve as the standard, should be thoroughly mixed before and after processing and should be stored in a dry place in clean cloth sacks.

3. For each fibre to be evaluated, obtain the sample by the "Method of Sampling and Preparation of Asbestos Fibres for Test Purposes."

Sample Preparation

1. For each evaluation, premix 1290 grams of cement and 860 grams of silica in the two-quart shell by rotating in the blender for 15 minutes. This cement-silica mixture, which will be sufficient for a 15 sample evaluation, should be stored in air-tight containers until needed.

2. Prepare three cakes each of the following compositions using the standard fibre (weigh to the closest 0.1 gram):

   3% Fibre - 4.5 grams fibre, 145.5 grams cement-silica mix
   9% Fibre - 13.5 grams fibre, 136.5 grams cement-silica mix
   15% Fibre - 22.5 grams fibre, 127.5 grams cement-silica mix

   Also prepare six cakes of the following composition using the fibre to be evaluated (weigh to the closest 0.1 gram):

   15% Fibre - 22.5 grams fibre, 127.5 grams cement-silica mix

The order of making should be staggered by preparing one cake each of 3%, 9% and 15% standard fibre followed by two cakes of the unknown, with this order being repeated until a total of 15 samples has been prepared.

3. Using the one-quart shells, dry mix the materials for each cake by rotating in the blender for five minutes and then add to 600 ml of tap water (at 77°F ± 3°) and wet mix for an additional five minute period. (It is found desirable to reserve one of the shells for dry mixing only, using the other for the wet mixing operation. Further, as a matter of convenience, the materials for one sample can be wet mixed while those for the next are being dry mixed). Be certain that both shells are thoroughly cleaned after each use.

4. During the mixing operation, fit the Buchner funnel with a sheet of Whatman No. 40 filter paper, wetting the paper to position it firmly. Then level the funnel by eye.

5. With the stopcock between the filter flask and vacuum source closed, adjust the vacuum to 16 inches of mercury.

6. When mixing is complete, swirl the shell vigorously to maintain a uniform slurry concentration and pour the material into the Buchner funnel.

7. When all of the slurry has been transferred, apply the vacuum noting the time. (A stop watch is recommended for all time schedules).

8. Rock the funnel continually during filtration to distribute the fibre.

9. As soon as the water has been drawn off (as indicated by a decrease in vacuum) again note the time. The number of seconds from vacuum application to this point is recorded as the filtering time.

10. Continue vacuum application for 30 seconds to draw off any water remaining in the bottom of the Buchner.

11. Remove the funnel from the flask, place a sheet of Whatman No. 50 filter paper on the cake, invert the funnel and remove the cake onto a tared Plexiglas square.

12. Remove the Whatman No. 40 from the cake bottom and replace it with a sheet of No. 50.

13. Then weigh the cake (to the closest 0.1 gram) on a balance tared for the Plexiglas and the two sheets of No. 50 filter paper.

14. Carefully place the mold over the cake, then invert so that the cake falls into the mold. This places the original bottom of the sample on the bottom of the mold with a sheet of Whatman No. 50 filter paper on each side.

15. Insert the plug into the mold, invert so that the plug is on the bottom, and place the assembly in the press. Apply pressure at a uniform rate such that a total load of 14,150 pounds is obtained over a 30 second period.

16. Allow the cake to compact for 30 seconds and then release the pressure.

17. Remove the mold from the press. Then remove the plug from the mold and run the spatula around the edge of the cake to free it.

18. Invert the mold on a Plexiglas square to remove the cake, peel off the upper filter paper, place the tared Plexiglas on top, invert, and peel off the bottom filter paper.

19. With the spatula smooth outwards any extruded flash from the pressing operation.

20. Then weigh the cake (to the closest 0.1 gram) on a balance tared for the Plexiglas.

Curing Cycle

1. When the series of cakes is finished, store the stack in the humidity cabinet with a Plexiglas square on the bottom and top and between each sample.

2. After 24 hours, remove the cakes from the humidity cabinet and autoclave for 20 hours using saturated steam at 125 pounds per square inch gauge. (Relative to autoclaving, the system should be purged of air prior to the start of the steaming cycle and the charging and blow-down operations should be performed slowly over approximately 15 minute periods.

3. Finally rack the cakes for free air circulation and dry in the gravity convection oven at 220°F ± 5° for 24 hours. Then obtain the dry weights to the closest 0.1 gram.

Testing Procedure

Test each cake in flexure on a five inch span. After the first break, place the two halves together, rotate the sample 90 degrees, and retest. Tests should be performed as soon as possible after removal from the oven so as to eliminate the effect of excessive moisture absorption.

Calculations

1. Record the average filtering time in seconds for the fibre being evaluated.

2. Calculate the per cent water remaining after filtration and after pressing for the unknown fibre (to the closest 0.1 per cent) as follows:

   Per cent water after filtration =
   (Average filtered weight) - 150.0 (100)/(150.0)

   Per cent water after pressing =
   (Average pressed weight - 150.0) (100)/(150.0)

3. Obtain the average breaking load in pounds for the unknown fibre and the 3%, 9%, and 15% standard cakes.

4. Using a relative strength of 20 for 3%, 60 for 9%, and 100 for 15%, calculate the least squares line of breaking load versus relative strength for the standard fibre, as illustrated in the following example:

   Assume that the average breaking loads for the 3%, 9%, and 15% standard cakes are 90.0, 171.0, and 240.0 pounds respectively. The following table is then set up, where X is the relative strength and Y is the corresponding breaking load:

	X	Y	(X)(Y)	$(X)^2$
	20	90.0	1,800.0	400
	60	171.0	10,260.0	3,600
	100	240.0	24,000.0	10,000
Total	180	501.0	36,060.0	14,000

   The average X and Y values are then calculated as:

   $M_X = 180/3 = 60$

   $M_Y = 501.0/3 = 167.0$

   The slope of the least squares line is next calculated as:

   $$m = \frac{36,060.0 - (60)(501.0)}{14,000 - (60)(180)} = \frac{36,060 - 30,060}{14,000 - 10,800} = \frac{6000}{3200} = 1.875$$

   The Y-intercept of the least squares line is finally calculated as:

   $b = 167.0 - (1.875)(60) = 167.0 - 112.5 = 54.5$

The equation for the least squares line of breaking load versus relative strength for the standard fibre is then:

$Y = 1.875\ x + 54.5$

5. From the equation for the standard, calculate the relative strength of the unknown fibre (to the closest 0.1) from its average breaking load, as illustrated in the following example:

   For an unknown fibre having an average breaking load of 210.0 pounds, the relative strength would be:

   $X = (210.0 - 54.5)/(1.875) = 155.5/1.875 = 82.9$

Results

1. Filtering Time - This time will vary with both the type of fibre used and the degree to which the fibre has been prepared. Since the end of filtration is taken as the point at which a decrease in vacuum occurs (caused by loss of the water seal around the cake edge), and is not based on the time required to remove a specified amount of water, it is dependent not only on the rate at which water is removed from the A/C slurry, but also on the water retention properties of the fibre used. Consequently, without the per cent water remaining after filtration, the filtering time has no definite meaning.

2. Filtered Weight - The filtered weight, in terms of the per cent water held after filtration, indicates the water retention properties of the fibre used and also varies with the fibre type and the degree of preparation. In conjunction with the filtering time, it has special application in the formulation of wet machine furnishes since, in wet machine operation, the water content of the asbestos-cement film on the felt is controlled by passing the film over a vacuum box.

3. Pressed Weight - The pressed weight, in terms of the per cent water held after pressing, is an indication of the resistance to water removal under pressure. The value is a guide as to the moisture content of the rolled product in wet machine operation and as to the moisture content of pressed sheets.

4. Relative Strength - The relative strength, which expresses the reinforcing characteristics of the fibre relative to the standard fibre as 100, is used in effectiveness of furnish calculations to control the strength of asbestos-cement products.

   Use of relative strength values in calculating the effectiveness

of furnish can best be illustrated by the following example:

The relative strength of a blend containing
80 pounds of Fibre A (relative strength 100),
50 pounds of Fibre B (relative strength 72), and
20 pounds of Fibre C (relative strength 32) is:

$$\frac{(80)\ (100) + (50)\ (72) + (20)\ (32)}{(150)} = 81.6$$

In a furnish containing 12.0 per cent of this blend, the effectiveness of furnish would be:

$$(81.6)\ (12.0) = 979$$

It should be emphasized that no general correlation exists between the effectiveness of furnish value and the various A/C processes. However, within any one process there is a definite relationship between the furnish calculation and product strength.

APPENDIX

Sample Preparation

One, two or three unknown fibres can be evaluated against the same standard within any one run, the only limiting factors being time and the capacity of the two-quart shell. If more than one fibre is evaluated, it is not possible to premix the cement and silica together, but each must be premixed separately and weighed separately. For a three fibre evaluation, consisting of 27 cakes, premix 2200 grams of cement and 1500 grams of silica and weigh out as follows:

3% Fibre Cakes - 87.3 grams cement, 58.2 grams silica

9% Fibre Cakes - 81.9 grams cement, 54.6 grams silica

15% Fibre Cakes - 76.5 grams cement, 51.0 grams silica

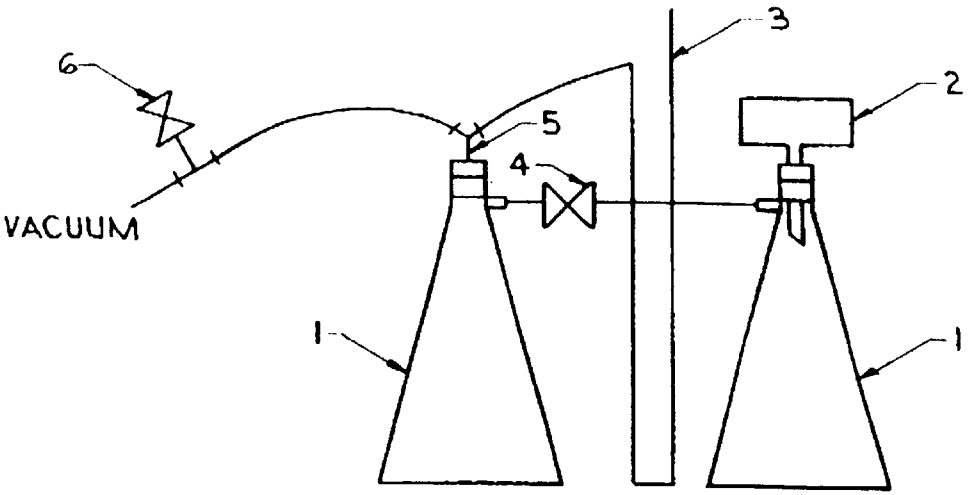

(1) FILTER FLASK (2000 ML.)
(2) BUCHNER FUNNEL (151 MM. I.D.)
(3) MERCURY MANOMETER
(4) BRASS STOPCOCK ($\frac{1}{4}$" BORE)
(5) BRASS Y-TUBE ($\frac{5}{16}$" BORE)
(6) NEEDLE VALVE ($\frac{1}{4}$" I.P.S.)
RUBBER TUBING ($\frac{1}{4}$" I.D. VACUUM TYPE)

VACUUM SYSTEM

FIGURE 1

E-3/10

ST0720646

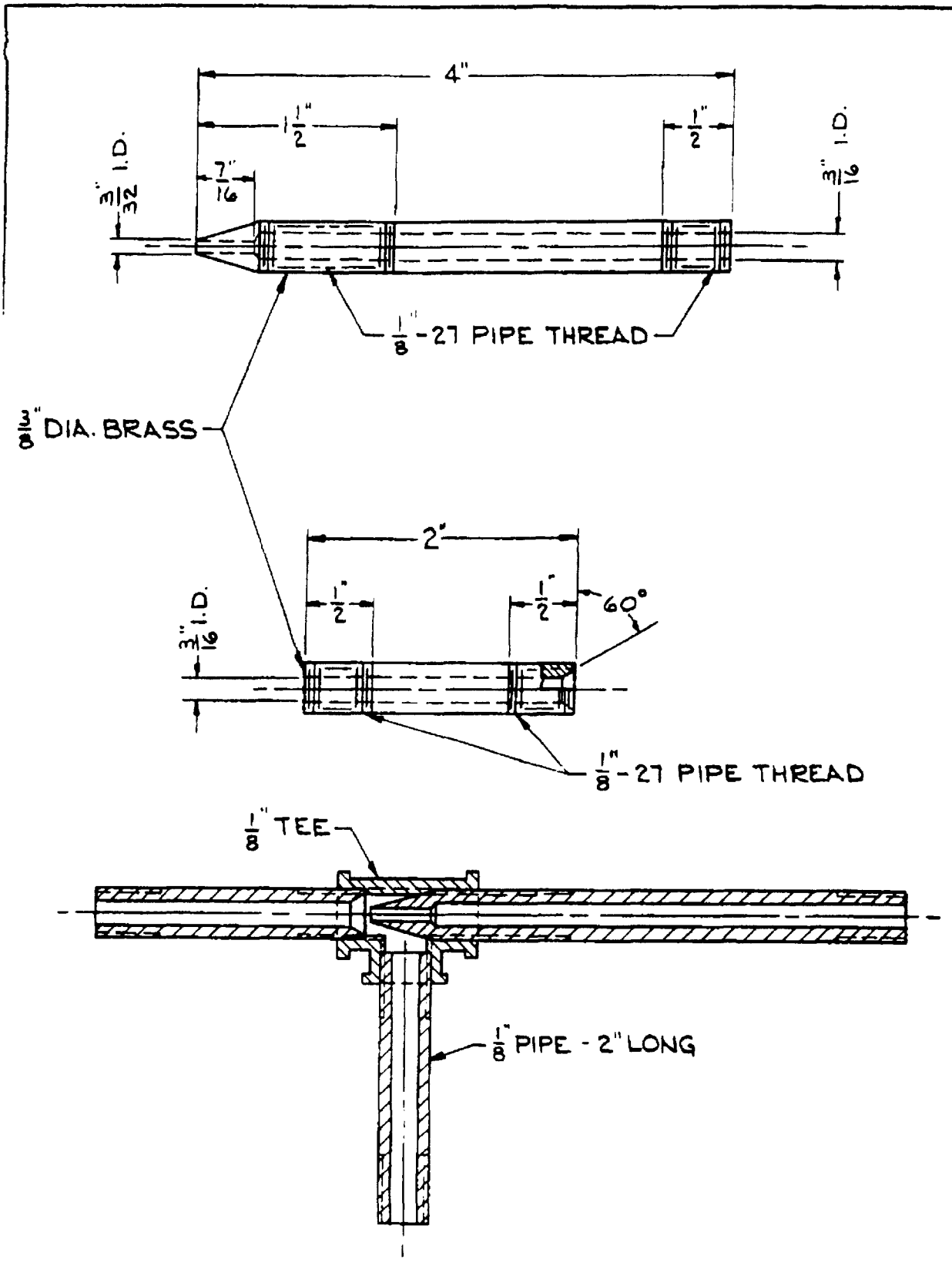

VACUUM ASPIRATOR ASSEMBLY

FIGURE 2

F-3/11

STO 72 06 47

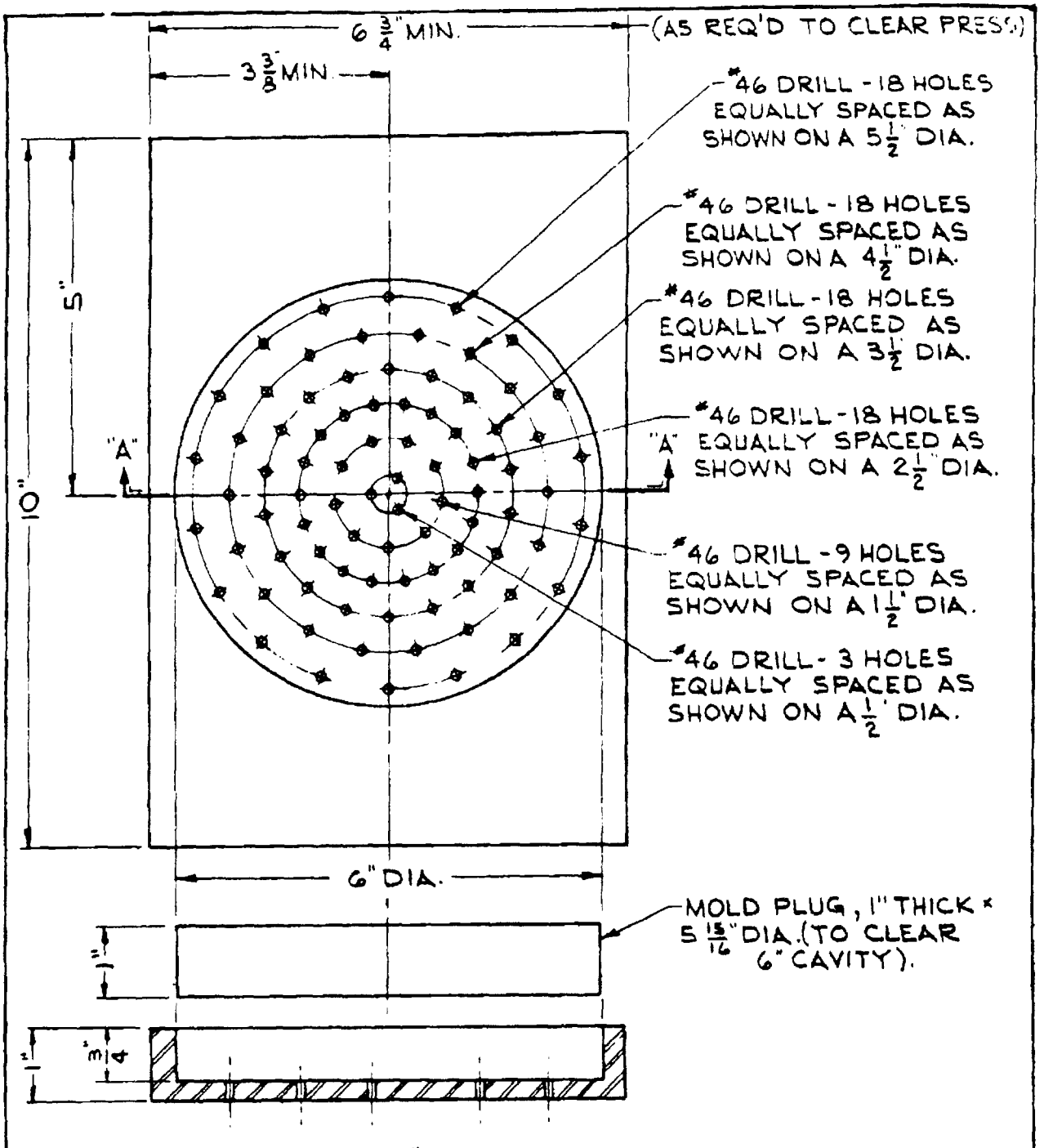

SECTION "A-A"

CONSTRUCTION NOTES:

1. MOLD MAY BE MADE CIRCULAR ($6\frac{3}{4}$" O.D) INSTEAD OF RECTANGULAR.
2. DRILL & TAP CENTER OF PLUG TO DEPTH OF $\frac{1}{2}$" FOR $\frac{1}{2}$-13 BOLT.
3. MATERIAL - COLD ROLLED STEEL.

PRESS MOLD

FIGURE 3

F-3/12

ST0720548

G
1

0648.A

Chrysotile Asbestos Test Manual

Third edition

ST0720649

G-1-74

COLOR

Supersedes Method G-1 of the 1966 second edition

Revised and adopted by:

Asbestos Textile Institute - 28 Feb 1974

Quebec Asbestos Mining Association - 29 May 1972

Printed in USA

ST0720650

Metnod for

COLOR[1]

Designation: G-1-74

1. Scope

1.1 This method covers the determination of color, whiteness, and yellowness of asbestos by means of a photoelectric reflectometer.

1.2 The method is applicable to all grades and varieties of homogeneous milled asbestos.

1.3 This method may be applied to samples that are not dry or homogeneous, or that contain impurities or adulterants. However, in such cases, results may not be comparable with those obtained on clean dry samples.

1.4 To obtain similar results from spectrophotometers, see ASTM Recommended Practice E 308 for Spectrophotometry and Description of Color in CIE 1931 System[2].

2. Summary of Method

2.1 Specimens are pressed into a pellet and the luminous reflectance is measured by means of a simple reflectometer fitted with an incandescent source, and a photoelectric detector.

2.2 Instructions are included for use of the suppressed zero technique to improve precision.

2.3 The use of tristimulus color filters permitting the determination of whiteness, yellowness and CIE[3] color-order values, is covered.

3. Significance

3.1 The color of asbestos is of commercial significance when it is to be incorporated into products, the color of which is affected by the color of the asbestos, and for which color specifications must be met.

3.2 Whiteness is required of asbestos for use in white or pale colored products.

3.3 Yellowness is significant in asbestos for use in pastel colored products where discolored asbestos may prevent attainment of certain shades and hues.

4. Description of Terms[4]

4.1 Whiteness - The term 'whiteness' is widely used to designate the degree to which a near-white surface approaches 'perfect white', defined as a 100 percent reflectance over the whole visible spectrum. Other terms used for this property are 'lightness' or 'luminous apparent reflectance'. The concept of whiteness is not only applicable to near-white surfaces but also to dark and colored surfaces. Whiteness may be defined as the grading which an observer would assign to the surface, irrespective of its color or hue, when compared under daylight conditions against a scale of grays ranging from white to black.

4.2 Yellowness - A yellowed or tan discolored asbestos may have the same degree of whiteness on the gray scale as a gray asbestos. It is thus necessary to measure an index of yellowness for such cases, and this may be calculated arbitrarily from reflectance measurements using tristimulus filters. Use the following relationship for asbestos:

Yellowness factor = (A - B)/G

Where A = reflectance with the amber tristimulus filter[5],

B = reflectance with the blue tristimulus filter, and

G = reflectance with the green tristimulus filter.

4.3 Daylight 0.785 rad, 0 rad (45 deg, 0 deg) Luminous Directional Reflectance.

4.3.1 Daylight 0.785 rad, 0 rad (45 deg, 0 deg) luminous directional reflectance (for brevity called reflectance) is the ratio of the luminous flux from a specimen illuminated at an angle of 0.785 rad (45 deg) by CIE standard source C[6] (average daylight) and viewed perpendicularly by the CIE standard observer, to the luminous flux from the standard magnesium oxide layer, similarly illuminated and viewed (Note 1). The combination of illumination at 0.785 rad (45 deg) and viewing at 0 rad (0 deg) (perpendicularly) has been selected as being representative of average conditions of illuminating and viewing. The property of reflectance determines which of two specimens will appear lighter when viewed in average daylight at an angle at which the observation of highlights is avoided.

Note 1 - These conditions of illumination and observation may be interchanged without affecting the results.

5. Apparatus

5.1 The apparatus shall consist of a photoelectric reflectometer having source, filter and receptor characteristics such that it will measure reflectance accurately to within one percent of full scale reading. The reflectometer shall have the following characteristics:

5.1.1 Spectral Characteristics. - The spectral energy distribution of the illuminator and the spectral sensitivity of the receptor, in combination, shall provide the equivalent of illumination by CIE standard source C and observation by the CIE standard observer.

5.1.2 Geometric Characteristics - Illumination shall be within 0.0698 rad (4 deg) of, and centered about, a direction of 0.785 rad (45 deg) from the perpendicular to the test surface; viewing shall be within 0.262 rad (15 deg) of, and centered about, the perpendicular (Note 1).

5.1.3 The recommended apparatus is the Photovolt Reflection Meter, Model 670[7].

5.1.4 Any instrument that meets the apparatus specifications and the precision and accuracy requirements stated in 12, may be used. In general, commercial instruments do not conform exactly to the apparatus requirements. The suitability of a given instrument depends in large measure on its response to the spectral selectivity range of asbestos, and on the availability of standards of similar reflectance and spectral character. Instruments that have been found satisfactory include: the Hunter Multi-purpose Reflectometer; the Gardner (Hunter) Photometric Unit with 0.785 rad, 0 rad (45 deg, 0 deg) reflectance head; and the General Electric Reflection Meter.

5.2 Standards

5.2.1 Primary Standard - The primary standard for reflectance measurements is a layer of MgO freshly prepared according to ASTM Recommended Practice E 259, for Preparation of Reference White Reflectance Standards[2]. It is assigned a value of 100 for the conditions of 0.785 rad (45 deg) illumination and perpendicular view (Note 1).

5.2.2 Secondary Standards - Porcelain enameled metal plaques or other materials known to be reasonably permanent in reflectance, and of uniform surface, may be calibrated and used as secondary reflectance standards.

Note 2 - Secondary standards of porcelain enamel may be obtained from the National Bureau of Standards[8], the Henry A. Gardner Laboratory[9] or the Photovolt Corp.[7] Experience has shown that these secondary reflectance standards are reasonably permanent if abrasion is avoided. Plaques stored for a year or more may develop 'bloom', most noticeable on black plaques, which can be removed by washing with mild soluble soap and water.

5.2.3 Standards with reflectance values as close as possible to the values of the unknowns are recommended.

5.3 Tristimulus filters[5], including amber, blue and green, to fit the reflectometer.

5.4 Piston and cylinder mold for pressing the asbestos specimens into pellets with a diameter of approximately 28.6 mm (1.125 in.). The height of the mold cavity may be approximately 63 mm (2.5 in.). The piston face must be polished.

5.5 Press[10] for molding specimens, capable of applying and holding a load of 7250 kgf (8 tons force).

5.6 Black body cavity.

5.7 Polished black glass standard approx. 50 by 50 mm (2 by 2 in.).

6. Sampling

6.1 Take a sample in accordance with Method A-1[12].

7. Test Specimen

7.1 Weigh out 10 g of asbestos and press at 7250 kgf (8 tons force) in the pellet mold for 60 s.

7.2 Note which side of the pellet was against the polished piston face since only that surface is suitable for color testing.

8. Calibration and Standardization

8.1 Follow the instructions given in the instruction manual for each type of apparatus. In addition, the following precautions may apply.

8.2 Make sure that the electric circuit has been energized in advance to warm the components to constant temperature.

8.3 Tobacco smoke and any other fumes in the atmosphere may interfere with some types of apparatus.

8.4 Use a voltage regulator if the power source fluctuates. Alternatively, energize the reflectometer by means of a storage battery. A battery is necessary to obtain stability on some types of apparatus, at high scale expansion. For Photovolt Model No. 610 battery operation is recommended, whereas Model No. 670 contains its own regulated voltage supply.

8.5 Protect the reflectometer from drafts since these can cause rapid temperature fluctuations which may affect precision.

8.6 Protect the apparatus from excessive vibrations which may be present in mill buildings since these can cause substantial errors.

8.7 Avoid strong sources of light near the apparatus to prevent stray light from reaching the photoelectric receptor.

8.8 Avoid parallax errors in reading needle - galvanometer type instruments.

8.9 When samples are in the lower range of reflectance values, the internal stray light effect in the reflectometer may be taken into consideration. Refer to operating instructions, and to A1.6.

8.10 Make sure that the source lamp is still within specifications since spectral characteristics change with age. Refer to ASTM Recommended Practice E 308.

8.11 Before use, always wash standards with mild soluble soap and water, rinse, and dry with a clean towel. Handle standards carefully to avoid abrading surfaces.

9. Procedure

9.1 The following procedure applies more specifically to the Photovolt Model 670 reflectometer and is given by way of example:

Note 3 - Detailed procedures for the use of Photovolt reflection meters Model No. 610 and 670 are given in the Annexes A1 and A2, respectively.

9.2 For the sake of brevity, the reflectometer controls will be identified by the following symbols:

D_c = coarse sensitivity control,

D_f = fine sensitivity control,

B_c = coarse zero suppressor control, and

B_f = fine zero suppressor control

9.3 Before energizing the reflectometer, adjust the galvanometer to read zero by means of the zero adjustment galvanometer control.

9.4 Energize the reflectometer, source, and receptor circuit, and allow to warm up.

9.5 Mount the required tristimulus filter and place the calibrating standard against the specimen aperture. Choose a standard slightly more reflectant than the test specimen, but as close as available to that value.

9.6 Normal scale determinations (without suppressed zero, or expanded galvanometer scale):

9.6.1 Turn the zero suppressor controls B_c and B_f all the way clockwise (until they click, on some equipment) and leave them in this position except when taking suppressed zero measurements as described in 9.7.

9.6.2 Turn the fine sensitivity control D_f to its center position and set the galvanometer approximately to the standard value of the working standard for the tristimulus filter being used, using D_c. Then make fine adjustments with D_f.

9.6.3 Remove the calibrating standard and place the test specimen with the face formed by the mold piston against the specimen aperture.

9.6.4 Note the galvanometer reading.

9.6.5 Replace the specimen by the standard and check to see if the standard reading has remained constant. If not, re-adjust the setting and repeat 9.6.2 to 9.6.5 until reproducible results are obtained.

Note 4 - After some time of operation, the operator will find that he can measure a number of samples in succession before going back to the standard.

9.6.6 Repeat this procedure using each of the other two tristimulus filters.

9.7 Suppressed zero technique.

9.7.1 Select two standards one of which is only slightly darker, and the other that is only slightly lighter than the specimen to be measured.

9.7.2 Proceed as in 9.3 to 9.5. Place the darker standard

against the specimen aperture after having turned D_c all the way clockwise and D_f and B_f approximately to their center positions.

9.7.3 Set the galvanometer approximately on zero with B_c. Then make fine adjustments with B_f.

9.7.4 Replace the darker standard by the lighter standard and adjust the galvanometer to approximately 100 percent reflectance (full scale) with D_c. Then make fine adjustments with D_f. The instrument is thus standardized to give a reading of zero for the darker standard and a reading of 100 for the lighter standard.

9.7.5 Place the test specimen with the face formed by the piston against the specimen aperture and read the galvanometer.

9.7.6 Recheck the darker and lighter standard settings and if necessary, re-adjust these two settings repeating 9.7.2 to 9.7.5. In re-adjusting the two settings, it will be noted that re-adjusting of the zero setting will always require re-adjusting of the 100 setting. However re-adjusting of the 100 setting does not require re-adjusting of the zero setting. Therefore, always re-adjust zero first and 100 next.

9.7.7 The instrument is designed so that it is possible to set the galvanometer on zero for a dark standard of any reflectance value. However, if the difference between the reflectance of the lighter standard and the darker standard is very small, it may happen that the 100 setting cannot be reached even though the sensitivity control knobs are turned all the way clockwise. In this case determine the highest even value that can be easily reached, and set the galvanometer to this value rather than to 100 in 9.7.4.

9.7.8 On worn instruments, where the response of the compensating photocell no longer matches that of the receptor, it may be impossible to attain the zero setting as described in 9.7.3. In that case determine the lowest even value that can be easily reached, and set the galvanometer to this value rather than zero. The required computations are described in 10.3.3. However, consideration should be given to repairing or replacing such defective equipment.

9.8 Yellowness factor - Take measurements by the suppressed zero method as described in 9.7 and calculate the yellowness factor as described in 10.5.

10. Calculation

10.1 If the instrument is not calibrated directly in percent

reflectance, then calculate these values for each specimen on amber, blue, and green tristimulus filters, using the conversion factor appropriate to the instrument in use.

10.2 If CIE[3] color-order values are required, calculate these from the reflectance values using the parameters given in ASTM Method D 2244 for Instrumental Evaluation of Color Differences of Opaque Materials[2].

10.3 If the suppressed zero method is used for taking reflectance measurements calculate the reflectance values as follows:

10.3.1 For cases where no problems are encountered in expanding the instrument scale, use the following equation:

$$r_x = r_d + g_x (r_1 - r_d)/100$$

where: r_x = reflectance of specimen, percent,

r_d = reflectance of darker standard, percent,

r_1 = reflectance of lighter standard, percent, and

g_x = galvanometer reading of the instrument, percent.

10.3.2 For cases where the scale cannot be expanded to reach 100 for the lighter standard, use the following equation:

$$r_x = r_d + g_x (r_1 - r_d)/g_1$$

where g_1 = galvanometer setting for the lighter standard, percent.

10.3.3 For cases where the scale cannot be expanded to reach 100 for the lighter standard and to reach zero for the darker standard, use the following equation:

$$r_x = r_d + g_x (r_1 - r_d)/(g_1 - g_d)$$

where g_d = galvanometer setting for the darker standard, percent.

10.4 Whiteness is equal to the reflectance value obtained on the green tristimulus filter.

10.5 Yellowness factor is calculated from the following equation:

$$YF = (A - B)/G$$

where YF = yellowness factor, expressed in terms of the submultiple 10^{-2},

A = amber tristimulus filter reflectance, percent,

B = blue tristimulus filter reflectance, percent, and

G = green tristimulus filter reflectance, percent.

10.5.1 Calculate the relative possible error in yellowness factor by the following equation:

P.E. (relative) percent = ±(a + b) x 100/(A - B)

where a = possible absolute error in the amber percent reflectance value,

b = possible absolute error in the blue percent reflectance value,

A = amber percent reflectance value, and

B = blue percent reflectance value.

11. Report

11.1 Fully identify the sample as to designation and origin.

11.2 Identify the apparatus used if other than the Photovolt reflectometer.

11.3 Report amber, blue and green tristimulus reflectance, to the nearest 0.1 percent.

11.4 If required, report CIE color order values, whiteness, and yellowness, including the possible relative error in the latter value.

Note 5 - Since yellowness factor involves the relatively small difference of two larger numbers, even slight errors in the latter will result in very large errors in the yellowness index. Thus it may be appropriate to report the possible relative error when reporting yellowness factors.

12. Precision and Accuracy

12.1 Results obtained on the same pressed specimen on the same instrument are generally repeatable to within ± 0.5 percent.

12.2 Results obtained on different specimens from homogeneous samples on the same instrument are generally repeatable to within ± 0.8 percent.

12.3 Results obtained on the same pressed specimens measured

on different instruments employing calibrated standards of nearly the same reflectance may be expected to be reproducible to within ± 1.2 percent.

12.4 Suppressed zero measurements permit better precision.

12.5 On the longer spinning grades of asbestos, it may be impossible to achieve the above precision due to local inhomogeneity caused by the coarser texture of the pressed specimens.

ANNEXES

A1. PROCEDURE FOR USE OF THE PHOTOVOLT REFLECTION METER[7] MODEL No. 610

A1.1 Preliminary Steps

A1.1.1 Insert the plug of the search unit cable into socket F (Fig. A1) on the instrument panel.

A1.1.2 Operation on 110 V 60 Hz ac.

A1.1.2.1 Do not connect the battery cable clamps. Throw switch E shown on Fig. A1 to 'AC' and plug the power cable on the instrument to a grounded 110 V 60 Hz a-c outlet (preferably into a stabilized voltage supply outlet).

A1.1.3 Battery operation:

A1.1.3.1 When equipped for operation from both power line and battery, Model 610 is provided with the following additional controls located at the far right-hand corner of the panel:

E Change-over switch,

H Push button, and

G Lamp control knob

A1.1.3.2 The two positions of the change-over switch are marked 'AC' and 'BATT'. Pressing the button H causes the galvanometer to act as a voltmeter for the voltage on the lamp in battery operation when ten divisions on the scale are equivalent to one volt. (For example, a reading of 60 indicates 6 V). The control knob G operates the lamp rheostat by means of which the lamp voltage can be adjusted in operation from a battery. Turning the knob clockwise increases the light intensity and turning it counterclockwise decreases it. The push button and the lamp control knob are inoperative when operating from the a-c power line.

A1.1.3.3 For measuring asbestos with tristimulus filters, the choice of voltage is not critical except that it is advisable to set the lamp always to approximately the same voltage within the range from 7.0 to 7.2 for valid tristimulus results. The voltage should be set just high enough within that range to reach the rated value for the working standard being used. In this way a wider margin is secured for the battery to wear down before

recharging. An example is given below.

A1.1.3.4 If the operator can easily reach a galvanometer deflection of 60 for a working standard that is rated at 60 when the lamp voltage is set at 7.1 V, then he should maintain this voltage for routine testing. To do so, he must press the push button and adjust the lamp control knob until the galvanometer reads 71. As the battery becomes discharged, the control knob will have to be turned more clockwise to maintain this setting. When the clockwise end position is reached, the battery must be recharged.

A1.1.3.5 A single automobile type 6-V storage battery is suitable to attain lamp voltages, up to 6.3 V when fully charged. For higher voltages, or better battery life, a 12-V automobile battery may be used provided it is tapped so that only four cells are in series at a time. This can be done by inserting a copper screw through the top of the casing to contact the fourth cell electrode plates, and using the screw as one of the terminals.

A1.1.3.6 Test the voltage of the battery under load by turning the lamp control fully clockwise and pressing the button. The load in this case includes the lamp and wiring resistance.

A1.1.3.7 Test the voltage of the battery without load by disconnecting the search unit cable. Pressing the button will then show the open-circuit voltage of the battery, irrespective of the lamp control knob.

A1.1.3.8 When an 8-V battery is used, take care to prevent the control knob from reaching its clockwise end position since lamp voltage may reach 8.5 V with a fully charged battery. For satisfactory lamp life, keep the lamp voltage below 7.5 V at all times.

A1.1.3.9 For suppressed zero measurements, the amplification of the scale is dependent upon the photocurrent which can be increased by higher lamp voltages. Voltages up to 8 V may be applied for short periods at the cost of shorter lamp life (30 hours at 8 V), and deviation from true tristimulus values. Such a procedure is acceptable for yellowness measurements, but the individual color measurements may not be reported as tristimulus values.

A1.2 Procedure

A1.2.1 With the switch A at 'OFF' set the galvanometer on zero by means of knob N on top of the galvanometer housing. This must be checked from time to time and readjusted if necessary.

A1.2.2 Insert the appropriate tristimulus color filter into the search unit and throw switch A to 'ON'.

A1.2.3 Proceed as in 9.5 to 9.8 of the test method.

A1.3 Transportation of Instrument

A1.3.1 Before carrying the instrument, throw switch A to 'OFF' thereby damping the galvanometer to prevent damage.

A1.4 Lamp Replacement

A1.4.1 Remove the three screws which hold the crackle-finished tubular part of the search unit to the bottom part.

A1.4.2 Observe that two coiled wires emerging from the lamp socket are soldered to a terminal strip. Unsolder these leads by means of a soldering iron.

A1.4.3 Remove the large hexagonal ring nut that holds the lamp socket in its bracket.

A1.4.4 Remove the lock washer and spacing collar.

A1.4.5 Loosen the four screws which hold the bracket to the two uprights and tilt the bracket so that the lamp with socket and wire coils can be removed.

A1.4.6 Replace this by a new lamp with socket and wire coils using the reverse procedure. These replacement assemblies are available from the supplier (catalog No. 6152).

A1.5 Lamp Adjustment

A1.5.1 After replacement of the lamp, it is essential to readjust the position of the lamp bracket. There are elongated holes in the uprights for adjustment in all directions.

A1.5.2 Tighten the four screws just sufficiently to permit shifting of the bracket.

A1.5.3 Place a thin piece of paper over the sample opening and observe the light spot in the opening.

A1.5.4 Adjust the lamp bracket until the light spot shows approximately even illumination and appears in the center of the opening (the spot is slightly oval).

A1.5.5 Focus the lamp so that the long diameter of the light spot is 15.9 mm (0.625 in.).

A1.6 Internal Stray Light Effect

A1.6.1 A slight amount of light is scattered in the search unit and registers on the photocell without being reflected from the test surface.

A1.6.2 To test for stray light effect, set the galvanometer

to zero by means of knob N with switch A at 'OFF'. Next set the instrument, by means of a working standard, so that the 100 point on the scale represents 100 percent reflectance. Then place a black body cavity over the sample opening. Instead of indicating zero, the galvanometer will now show a slight deflection. If the lamp is properly focused, the reading should be about one division line or even less.

A1.6.3 If the stray light effect amounts to more than two division lines even though the lamp is properly focused as in A1.5.5, return the search unit to the manufacturer for inspection.

A1.6.4 The stray light effect can be disregarded for lighter specimens. For example, if the 100 point represents 100 percent reflectance and the sample reads 60 (a typical asbestos) and if we deduct the stray light effect (two units) from the 100 setting and from the measured value, the corrected value becomes (60-2)/(100-2) = 59.2.

A1.7 Effect of Specular Gloss

A1.7.1 Reflected light is a true measure of the diffuse reflectance, without any error due to gloss, only if the lamp is properly focussed. To test the gloss effect of the search unit, a piece of polished black glass can be used.

A1.7.2 If the instrument is adjusted so that the 100 point of the scale represents 100 percent reflectance and if the black glass is then placed on the search unit, the reading will be one or two division lines. However, only a part of this reading is due to specular reflection, the other part being due to the stray light effect referred to in A1.6.

A1.7.3 Evaluate the gloss effect as the difference between the black glass reading and the black body cavity reading. This difference is less than one division for a properly focussed lamp. If gloss is higher, return the search unit to the manufacturer for inspection.

A1.8 Position of Search Unit

A1.8.1 If the apparatus is calibrated with the search unit upright, then measurements must be made in the upright direction, or vice-versa. Therefore ensure that the specimen opening is always at the top for testing asbestos pellet specimens.

A1.9 Service Notes

A1.9.1 The optical system of the search unit should be cleaned from time to time. It is accessible on one side through the sample opening while the other side can be reached after the crackle-finished tubular sleeve of the search unit has been removed from the other part.

A1.9.2 Dust or dirt on the lens or the lamp will have the effect that the sensitivity control knobs have to be turned farther clockwise and, in extreme cases, may make it impossible to reach the rated reflectance values of the working standard.

A2. PROCEDURE FOR USE OF THE PHOTOVOLT REFLECTION METER[7] MODEL No. 670

A2.1 Preliminary Steps

A2.1.1 Check the bottom panel and make sure the voltage selector switch is in the appropriate position (110 or 220 V). Then connect the 3-prong plug to a grounded outlet. If no such outlet is available, use the adapter provided, but be sure to connect the loose ground wire to some convenient ground such as the outlet box.

A2.1.2 Observe the meter and make sure the pointer indicates zero. If it does not, adjust it to zero with the small screw located at the needle axis (X in Fig. A2). Turn on the instrument by means of switch A in Fig. A2.

A2.1.3 With the zero suppressor off (extreme left knob D turned fully clockwise until it clicks) and the sensitivity controls F and G fully clockwise, adjust the amplifier zero control C to make the meter read zero.

Note A1. - The amplifier zero should be rechecked from time to time, certainly no more than once a day. For a quick recheck, it is not necessary to disconnect the search unit. However, care must be taken to prevent any light from reaching the photocell by covering the opening, and lamp switch B must be off.

A2.1.4 Plug the search unit into the socket on the rear apron.

A2.1.5 Turn on the search unit by means of switch B and allow it to warm up for about 1.8 ks (30 min.). Place the search unit with the specimen opening upward for calibration and for measurements.

A2.2 Procedure

A2.2.1 Insert the appropriate tristimulus color filter into the search unit.

A2.2.2 Proceed as in 9.5 to 9.8 of the test method.

A2.3 Lamp Replacement

A2.3.1 Proceed as in A1.4.

A2.4 Lamp Adjustment

A2.4.1 Proceed as in A1.5.

A2.5 Internal Stray Light Effect

A2.5.1 Refer to A1.6.

A2.6 Effect of Specular Gloss

A2.6.1 Refer to A1.7.

A2.7 Service Notes

A2.7.1 In cold, dry weather, a static charge may form on the meter window. This will be evidenced by erratic movement or sticking of the pointer. This charge may be removed by wiping the window with a damp cloth, but a more permanent cure may be effected by applying anti-static spray which is available in most electronic supply houses.

A2.7.2 Refer to A1.3 and A1.9 for additional notes.

A2.8 Operation with a Digital Galvanometer.

A2.8.1 The output terminals on the rear apron may be used to connect a digital readout accessory (Catalog No. 6500). The fine adjustment for this outlet is provided by the output terminal control which adjusts the voltage to 1000 ± 100 mV.

A2.8.2 Insert the metal end of the connecting cable into the receptacle on the right sidewall of the digital galvanometer, and tighten the thumb screw. Plug the pigtail of the cable into either of the pinjacks. Then plug the bayonet end of the cable into the outlet marked 'RECORDER' on the back of the meter. The side marked 'GND' should be in the black jack. (If the 'GND' cable is connected to the red jack, the digital readout will run backwards. This indicates that the cable should be reversed.)

A2.8.3 With the reflection meter set on zero turn the main switch of the digital galvanometer to 'ZERO-SET' and adjust the left-hand 'ZERO-SET' knob until the digital display shows 000.0.

A.2.8.4 Place the calibration standard on the search unit and adjust the reflection meter so that the needle galvanometer will correspond to the value of the standard (see Note A2). Switch the digital galvanometer to 'READ' and set the digital display to the exact value of the calibration standard using the 'CALIBRATE' knob.

Note A2.- The meter display need not be in exact coincidence with the digital display.

A2.8.5 After standardization, switch to 'STANDBY' and place the test specimen on the search unit. Switch to 'READ' to take the required measurement.

ST0720667

FOOTNOTES

1. Supersedes designation G-1 in the 1966 second edition. Dates of adoption or latest revision: Asbestos Textile Institute, adopted 7 Jun 1973, latest editorial revision 28 Feb 1974; Quebec Asbestos Mining Association, adopted 29 May 1972, latest editorial revision 14 Mar 1974.

2. Annual Book of ASTM Standards, Part 41. Additional vital information was published in Part 27 of the 1968 edition.

3. Commission Internationale de l'Eclairage (International Commission on Illumination). The CIE color-order system is the most important of those used in connection with instruments for color measurement. Refer to method E 308[2].

4. Taken in part from Procedure No. B5-9 of Asbestos Corporation Limited, with permission.

5. Tristimulus filters are described in the following reference. Lih, M.M., Chemical Engineering CHEEA, Vol 17, 1968, p 146.

6. CIE standard sources and functions are defined in Method E 308[2].

7. Available from Photovolt Corp., 1115 Broadway, New York, N.Y. 10010.

8. National Bureau of Standards, Washington D.C. 20234.

9. Gardner Laboratory Inc., Box 5728, Bethesda Md. 20014.

10. The Carver Laboratory press supplied by F.S. Carver Inc., 1 Chatham Road, Summit, N.J., has been found suitable.

11. Annual Book of ASTM Standards, Part 33.

12. Appears in Chrysotile Asbestos Test Manual, third edition, available from Quebec Asbestos Mining Association, 580 Grande Allée East, Suite 320, Quebec, P.Q., Canada, G1R 2K2.

ST0720668

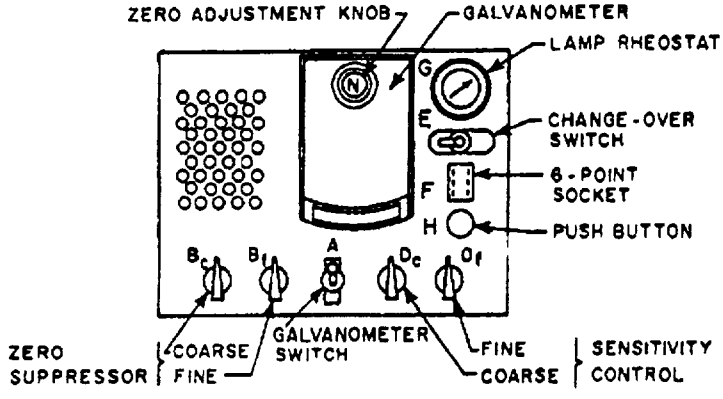

Fig. A1— Photovolt Model No. 610 Instrument Panel

ST0720669

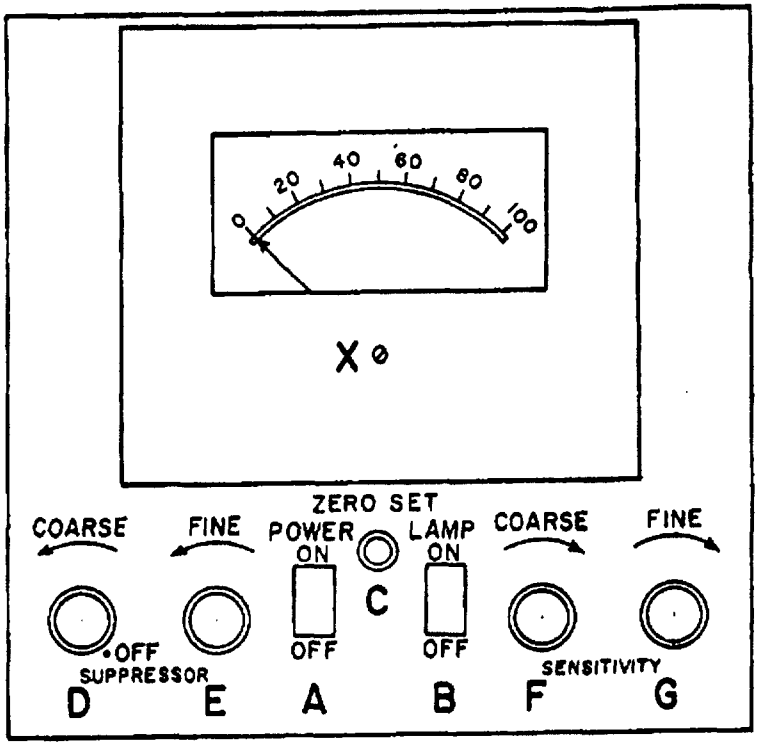

Fig. A2 — Photovolt Model No. 670 Instrument Panel

Chrysotile Asbestos Test Manual

Third edition

ST0720670

G-2-74

QUANTITATIVE ANALYSIS

Revised and adopted by:

Asbestos Textile Institute -28 Feb 1974

Quebec Asbestos Mining Association - 6 Oct 1972

Printed in USA

ST0720671

QUANTITATIVE ANALYSIS

Scope

1. These methods describe procedures for the quantitative analysis of chrysotile for (a) Silica (SiO_2), (b) Ferric Oxide (Fe_2O_3), (c) Alumina (Al_2O_3), (d) Calcium Oxide (CaO), (e) Magnesium Oxide (MgO), (f) Carbonates, (g) Water of Crystallization.

Outline of Method

2. The samples are treated as silicates not decomposed by acids and are therefore fused with Na_2CO_3 to convert to soluble sodium salts. From the hydrochloric acid solution of the melt, silica is first removed by dehydration and precipitation. The filtrate containing iron and aluminum plus calcium and magnesium is treated with bromine water to oxidize the iron to the ferric state and the latter together with the aluminum are precipitated with ammonia and ignited. To differentiate between Fe_2O_3 and Al_2O_3, the ignited residue is fused with potassium pyrosulfate and the iron in the melt determined volumetrically. Another aliquot portion of the solution of the melt is used for determination of alumina by use of 8 - hydroxy quinoline. The filtrate resulting from the Fe_2O_3 and Al_2O_3 precipitation contains calcium (if present) and magnesium. The calcium is precipitated from this filtrate, after the latter is acidified, as calcium oxalate. The latter is ignited and weighed as CaO. The filtrate after removal of the calcium is made acid with conc. HNO_3 and evaporated to dryness to insure removal of ammonium salts, as the latter will prevent complete precipitation of the magnesium. The residue is dissolved in dilute HCl and the magnesium precipitated with $(NH_4)_2HPO_4$ in ammoniacal solution. The precipitate is carefully ignited and weighed as $Mg_2P_2O_7$. The water of crystallization is determined by ignition loss and corrected for carbonate content.

Sampling

3. (a) Sample - The sample shall be the laboratory test sample in accordance with (A-1) "Method of Sampling and Preparation."

(b) Test Specimen - The 0.5 gram test specimen shall be derived from the laboratory test sample. Quarter the sample down to approximately 25 grams as prescribed in the Sampling and Preparation of Fibre, Part 2, (a) through (g). Divide the 25 gram sample into ten approximately equal portions and subdivide these portions into halves. Combine a half of each of the ten portions and mix thoroughly. Repeat this procedure until the sample weight is reduced to approximately 3 grams. On a smooth, clean area spread the 3 gram sample into a thin layer over an area of approximately 8 in. x 8 in. in such a manner that pinches may be taken from all parts. Extract with tweezers five bundles of long fibre free from rock, grit or dust, each weighing about 0.5 gram. Spread into a thin layer and extract at least five bundles of the fibre from different parts so that when these are combined and dried to constant weight at 110°C (230°F) the test specimen will weigh 0.5 ± 0.02 grams.

(c) Preparation of Sample - The test specimen is placed in a tared porcelain crucible and after being brought to constant weight at 110°C (230°F) is cooled in a desiccator and weighed on a sensitive gram balance to the fourth decimal place. This weight minus the tare is the sample weight (W) for (a) SiO_2, (b) Fe_2O_3, (c) Al_2O_3, (d) CaO and (e) MgO. (Different samples must be used for carbonates and water of crystallization). The crucible with specimen is then placed in a furnace at 927-954°C (1700-1750°F) for one hour. After cooling, the specimen is reduced to as fine a mesh as possible with an agate mortar and pestle. About 3.0 grams Na_2CO_3 are added and ground intimately with the specimen for an intimate mixture. The contents of the mortar are then transferred to a 30 ml capacity platinum crucible using a camel hair brush to sweep the last of the mixture from the mortar. Successive small amounts of additional Na_2CO_3 are then ground in the mortar and transferred in like manner to the platinum crucible, to insure removing the last trace of specimen from mortar to the crucible. Then sprinkle a little additional Na_2CO_3 on top of the intimate mix of powdered specimen and the Na_2CO_3, place a platinum lid on the crucible.

(d) Apparatus:

(1) Mortar and Pestle, 125 ml capacity. Agate.

(2) Platinum Crucible, 30 ml capacity.

(3) Oven for drying at 110°C (230°F).

(4) Muffle type electric furnace for ignition at 1700°-1750°F (927°-954°C).

(5) Sensitive chemical gram balance.

(6) Porcelain Crucible, 20 ml capacity.

(7) Camel Hair Brush.

(8) Desiccator.

(e) Reagents:

(1) Na_2CO_3, Anhydrous, C.P.

Determination of Silica

4. (a) Procedure - Heat the covered platinum crucible containing the intimate mix of powdered specimen and flux at first over a small flame to drive out any moisture present. Gradually raise the temperature until the highest heat of a good Meker burner is obtained. As soon as the mass melts quietly and there is no further evolution of carbon dioxide, the decomposition is complete. Wind a piece of platinum wire into a spiral and insert it into the fused mass. Remove the flame, allow the crucible to cool in the air somewhat and then play a stream of water upon the outside of the crucible. As soon as the crucible does not hiss when the water strikes it, quickly introduce enough water into the crucible to cover the melt. After about a minute carefully pull on the wire; usually the melt can be withdrawn from the crucible. If it does not come out easily, it can often be loosened from the crucible. If it does not come out easily, it can often be loosened by carefully heating the crucible; place the melt in a 300 ml casserole, add 25 ml of water, cover the casserole and carefully add 25 ml of 6 N. hydrochloric acid. A lively evolution of carbon dioxide at once takes place, but as the silicic acid separates, the inner part of the cake gradually becomes coated with a film of silicic acid which protects it from the further action of the acid. Consequently, it is necessary to break up the cake from time to time by means of a glass rod, until finally there is no evolution of a gas and no more hard lumps remain. After the evolution of carbon dioxide has nearly ceased, wash off the under side of the watch glass, raise it by placing a glass triangle under it, and evaporate to dryness. Heat the residue for at least an hour at 110°C to dehydrate the silica.

Moisten the dry powder with conc. hydrochloric acid and allow the covered dish to stand 10 minutes at the ordinary temperature in order that the basic salts and oxides formed during the evaporation and drying may once more be changed to chlorides. Then warm gently, dilute with 100 ml water, heat to boiling, and after the silicic acid has settled, filter

through a well-fitted ashless filter paper. Wash the residue three or four times by decantation with hot 2 N. hydrochloric acid, then transfer to the filter and wash with hot water until free from chloride. Place the precipitate in a platinum crucible and set aside for the time being. The separation of the silicic acid is not quite complete; as much as 2 mg may remain in the filtrate. To remove this, once more evaporate the solution to dryness on the water bath, and again heat at 110°C for an hour, moisten the residue with 5 ml of conc. hydrochloric acid, and allow to stand not more than 15 minutes. Warm, dilute to 100 ml, heat to gentle boiling, and filter through a new and correspondingly small, ashless filter, washing with hot 2 N. acid and with water as before. Save the filtrate and analyze it for Fe_2O_3, Al_2O_3, CaO and MgO as will be subsequently described.

Combine the latter wet filter with that one previously obtained and ignite the wet filters containing the silica in a platinum crucible. Keep the temperature low until all the carbon is consumed, and do not allow the filter to catch fire. Finally, cover the crucible and ignite over a Meker burner, cool and weigh as impure silica.

The silica thus obtained is not absolutely pure. To test its purity, moisten it with water, add a drop of conc. sulfuric acid and about 5 to 10 ml of pure hydrofluoric acid. (Do not measure this acid in a glass graduate. Do not inhale the fumes. If spilled on the hands, wash them immediately under the water tap). Place the crucible in an air bath and evaporate under a hood until no more vapors are expelled. Then remove the excess sulfuric acid by heating over a free flame. Raise the temperature gradually and finally heat the crucible over a Meker burner and again weigh. Repeat the treatment with sulfuric and hydrofluoric acids, without adding any more water, until the contents of the crucible (usually Fe_2O_3 and Al_2O_3) are at a constant weight. Deduct this amount from the weight of impure silica and add it to the precipitate obtained with the ammonia in the subsequent analysis.

(b) Calculations:

$$\frac{\text{Wt. of Silica}}{\text{Wt. of Sample (W)}} \times 100\% = \% \ SiO_2$$

(c) Apparatus:

(1) Platinum Crucible

(2) Platinum Wire

(3) 300 ml Casserole

(4) Glass Triangle

(5) Vented Chamber at 110°C

(6) Ashless Filter Paper (Whatman No. 41)

(7) Water Bath

(8) Meker Burner

(9) Vented Hood

(d) Reagents:

(1) 6 N. Hcl

(2) 2 N. Hcl

(3) Conc. Hcl

(4) Conc. H_2SO_4

(5) Pure HF

Determination of Ferric Oxide

5. (a) Procedure - The filtrate obtained after precipitation of the silicic acid in the last procedure should be treated as follows. Oxidize the iron back to the ferric state by adding bromine water and boiling until the excess of the latter is expelled. After this add 10 ml of 2 N. ammonium chloride solution, several drops of methyl red indicator, and precipitate the aluminum and iron from the boiling hot solution by adding dilute ammonia free from carbonate until the solution turns yellow. Allow the precipitate to settle, filter, and wash twice by decantation with hot water. Redissolve by running hot 2 N. hydrochloric acid through the filter into the beaker containing the greater part of the precipitate. Repeat the precipitation with ammonia as before, and after filtering and washing by decantation, transfer the precipitate to the filter and wash until free from chloride with water containing 2 per cent ammonium nitrate. Save the filtrate for CaO and MgO determinations.

Allow the precipitate to drain as completely as possible, and ignite wet in the crucible containing the residue obtained from the treatment of the impure silica with sulfuric and hydrofluoric acids. After igniting strongly over a Meker burner, weigh the crucible; its contents represent the sum of Al_2O_3 and Fe_2O_3.

For the determination of the Fe_2O_3, fuse the mixed oxides with potassium pyrosulfate in a silica crucible using 15 to 20 times as much $K_2S_2O_7$. Before starting the fusion, heat the $K_2S_2O_7$ in the silica crucible until fumes of sulfuric anhydride evolve. This makes it anhydrous so that steam will not come off during the fusion. Add the mixture of oxides to this and heat slowly with a small flame until complete fusion occurs. Add a small amount of additional $K_2S_2O_7$ at the last. When the fusion is complete, make a spiral from a platinum wire and insert in the melt. When solidified, remove by pulling the wire. Dissolve the melt in Hcl (1:1 by vol.) stirring until all is dissolved. Dilute this solution to a definite volume and take one half of it for the Fe_2O_3 and the other half of it for the Al_2O_3 determination.

Heat the liquid taken for the Fe_2O_3 to about 80°C and while still hot reduce the ferric iron by adding stannous chloride drop by drop from a buret until the yellow color of the $FeCl_3$ just disappears, using a white piece of paper under the beaker for a better background of color change. Cool the solution to 15°C, and while stirring add 10 ml of $HgCl_2$ solution. Formation of a light silky precipitate indicates conditions are correct. Stir the solution vigorously for one minute, add 3 drops of diphenylamine indicator solution and dilute to 150 to 200 ml with cold distilled water. Titrate with a standardized solution of $K_2Cr_2O_7$ until the blue color persists. The concentration of the $K_2Cr_2O_7$ solution should be such that one ml of the standard solution is equivalent to .006 grams Fe. From the titration, calculate the Fe to Fe_2O_3.

(b) Calculations:

$$\frac{(\text{ml } K_2Cr_2O_7 \text{ titer}) \times .006 \times \frac{2}{1} \times 1.43}{\text{Sample Wt. (W)}} \times 100\% = \% \; Fe_2O_3$$

(c) Apparatus:

(1) Meker Burner

(2) Platinum Crucible

(3) Platinum Wire

(4) Silica Crucible

(5) Two 50 ml Burets

(6) Ashless Filter Paper (Whatman No. 41)

(d) Reagents:

(1) Bromine Water

(2) 2 N. NH_4Cl

(3) 2 N. NH_4OH

(4) 2 N. HCl

(5) 2% NH_4NO_3

(6) $K_2S_2O_7$ C.P.

(7) 1:1 by Vol. HCl

(8) Stannous Chloride

Prepare by dissolving 15 grams Tin metal C.P. in 350 ml hot HCl (Sp. Gr. 1.19) and dilute to one liter.

(9) Mercuric Chloride
(Saturated Solution)

(10) Diphenylamine Indicator 1 gram dissolved in 100 ml H_2SO_4 (Sp. Gr. 1.84)

(11) Potassium Dichromate, approximately 0.1 N.

Prepare by dissolving 4.9 grams in water and diluting to one liter. Standardize against a known weight of pure iron using same method as in the procedure.

Determination of Aluminum Oxide

6. (a) Procedure - Use the other half of the solution from the last procedure made with the 1:1 HCl. Dilute to approximately 200 ml and heat to 70°C. Add an excess of the reagent 8 - Hydroxyquinoline. Slowly add 2 N. ammonium acetate until a permanent precipitate is formed, and then add 20 to 25 ml more. Allow the precipitate to settle, filter through a weighed Gooch crucible, wash with cold water, dry at 120 to 140°C, and weigh as Al $(C_9H_6ON)_3$ containing 11.1 per cent Al_2O_3.

(b) Calculations:

$$\frac{\text{Wt. of Al } (C_9H_6ON)_3 \times .111}{\text{Sample Wt. (W)}} \times 100\% = \%\ Al_2O_3$$

(c) Apparatus:

(1) Tared Gooch Crucible with asbestos mat.

(2) Filter suction flask and aspirator.

(d) Reagents:

(1) 8 - Hydroxyquinoline, prepared by dissolving 25 grams in 60 ml glacial acetic acid. Dilute with cold water to 2 liters.

(2) 2 N. CH_3COONH_4

Determination of Calcium Oxide

7. (a) Procedure - Make the filtrate, obtained from the ammonia precipitation of Fe_2O_3 and Al_2O_3 in the previous procedure, acid with HCl. Bring to a volume of 400 ml, heat to 80 to 90°C, and slowly add, while stirring, 30 ml of hot 0.5 N. ammonium oxalate solution. Slowly add NH_4OH until the solution is slightly ammoniacal and allow the precipitate to stand several hours before filtering.

If considerable magnesium is present in the solution, some magnesium oxalate will come down with the calcium oxalate. Since chrysotile contains a large amount of magnesium, it is best to redissolve the calcium oxalate precipitate and repeat the precipitation, using a filter paper for filtering off the precipitate. When all the solution has passed through the filter, wash the precipitate with about 15 ml hot water. Then rinse the precipitate back into the original beaker by holding the funnel in an inverted position and directing a stream of hot water against it. Replace the funnel in the support and wash the filter with about 25 ml of hot 3 N. hydrochloric acid. Heat the acid in a test tube, pour it upon the upper edge of the paper, and catch the liquid as it runs through the filter in the beaker containing the precipitate. Finally wash the filter with a little hot water (and with dilute ammonia if it is to be used again for filtering the next precipitate). Heat the dilute acid in the beaker and add a little more acid if necessary to dissolve the precipitate completely. Dilute the solution to about 250 ml and repeat the precipitation of the oxalate at the boiling temperature, adding ammonia and 5 ml more of the ammonium oxalate reagent. Since the solution already contains oxalic acid equivalent to the calcium, only a little more reagent is necessary.

Weighing as CaO. Use an ashless paper for collecting the precipitate. Wash the precipitate with hot water until free from chloride, and save the filtrate for the magnesium determination. Transfer the precipitate to a weighed platinum crucible. Ignite carefully with the flame at the mouth of the crucible until the precipitate is dry, and then heat with a small flame at the base of the crucible until all the paper is decomposed without letting it take fire. Then gradually raise the temperature and heat over a Meker burner for an hour with the crucible in an upright position and covered. Cool to about 100°, place in a desiccator, and weigh after 15 minutes. Repeat the heating until after cooling a constant weight is obtained. The calcium oxide is somewhat hygroscopic but is not difficult to weigh if it has been washed free from chloride. Call the weight constant if it agrees within 0.2 mg with the previous weight.

(b) Calculations:

$$\frac{\text{Wt. CaO}}{\text{Wt. Sample (W)}} \times 100\% = \% \text{ CaO}$$

(c) Apparatus:

(1) 600 ml Beaker

(2) Glass Funnel

(3) Platinum Crucible

(4) Ashless Filter Paper (Whatman No. 40)

(5) Meker Burner

(6) Desiccator

(d) Reagents:

(1) 3 N. HCl

(2) 0.5 N. Ammonium Oxalate

(3) 2 N. NH_4OH

Determination of Magnesium Oxide

8. (a) Procedure - Add 75 ml of concentrated HNO_3 to the combined filtrates and washings from the $CaC_2O_4H_2O$ precipitation, and evaporate to dryness on the steam bath or hot plate. Do not boil the solution or there will be loss by spattering. Keep

the beaker covered with a watch glass supported above the upper rim of the beaker. A glass triangle, or glass supports which are made for this purpose, should be used to support the watch glass. To the small residue obtained, add 2 ml of concentrated HCl and 25 ml of water. Heat nearly to boiling, and, after a few minutes, filter off the silica residue through a small filter. Wash the beaker, and filter thoroughly with hot water. The silica comes from the action of reagents on reagent bottles or on the beakers used in the analysis.

Dilute the solution to about 150 ml; add about 1.2 g of $(NH_4)_2HPO_4$ dissolved in a little water and a few drops of phenolphthalein indicator solution. Heat nearly to the boiling point, and then slowly add 1.5 N. ammonia water until a faint pink color is obtained and a slight precipitation takes place. Stir well for about a minute, touching the sides of the beaker as little as possible. When the precipitate has become distinctly crystalline, add more ammonia until a deep color is obtained with the phenolphthalein. Allow the solution to cool, then add one-fifth the solution's volume of concentrated ammonium hydroxide and allow to stand over night. Continue the analysis as follows:

Weighing as $Mg_2P_2O_7$

$$2MgNH_4PO_4.6H_2O \xrightarrow{\quad} 13H_2O + 2NH_3 + Mg_2P_2O_7$$

Use an ashless filter paper for filtering off the magnesium ammonium phosphate precipitate. After washing it with 1.5 N. NH_4OH, moisten with a saturated solution of ammonium nitrate in 1.5 N. NH_4OH, dry and ignite very slowly and carefully, and weigh. The precipitate contains 36.21% MgO.

(b) Calculations:

$$\frac{\text{Wt. } Mg_2P_2O_7 \times .3621}{\text{Sample Wt. (W)}} \times 100\% = \% \text{ MgO}$$

Determination of CO_2 from Carbonates (By Knorr Alkalimeter Method as Proposed in ASTM D-13 Supplement 1958)

9. (a) Sampling - The sample shall be taken in the same manner from the laboratory test sample from which specimens were taken for the preceding analyses. A specimen shall be taken, weighing approximately one gram and dried to constant weight at 110°C (230°F) weighing to the nearest 0.001 gram. Call this sample weight W.

(b) Procedure - Check the gas flow train to insure freedom from leaks. Aspirate a current of air through the system at the rate of about two bubbles per minute for a period of 10 minutes. Stop the air current and remove the absorption tubes. Place the tubes within the balance case and allow it to stand for several minutes. When ready for weighing, open the stopcock momentarily and close. Weigh and repeat the above procedure. The second weight should agree with the first to within 0.005 g. If it does not, repeat this process until the two successive weighings agree. When a constant weight is reached, replace the absorption tubes in the gas train.

Transfer about one g of the sample, weighed to the nearest 0.001 g, to the distillation flask. Wash down any adhering particles on the inside neck of the flask with distilled water. Add enough distilled water to the flask so when the apparatus is reconnected the tip of the dropping funnel will be submerged about 5 to 10 mm. Place 50 ml of HCl (1:1) in the dropping funnel and replace the guard gas-absorption tube at the top of the funnel. Start the flow of water in the condenser and open all the stopcocks except the one on the dropping funnel. Turn on the aspirator for medium suction. Adjust the stopcock on the dropping funnel so the suction will draw the acid slowly into the flask. When all the acid is in the flask, fully open the funnel stopcock and pull air through the system at the rate of two or three bubbles per second. After the reaction in the flask has subsided, warm the contents gently to boiling. When steam starts to condense in the condenser, turn off the heat. Continue to draw air through the apparatus for 30 minutes. Re-weigh the absorption bulb as before. The gain in weight represents the CO_2 in the sample.

(c) Calculations:

$$\frac{\text{Wt. of } CO_2 \text{ Absorbed}}{W_1 \text{ (Sample Weight)}} \times 100\% = \%\ CO_2 \text{ in Asbestos}$$

(d) Apparatus:

Sensitive Chemical Gram Balance
Knorr Alkalimeter, consisting of the following parts connected as shown in the appended sketch Figure No. 1.

(1) Gas Washing Bottle, A, containing concentrated H_2SO_4 which serves both to indicate the rate of flow and to prevent any water vapor entering the system from the atmosphere.

(2) Drying Tube or Cylinder, B, filled two-thirds full of soda-asbestos absorbent (Ascarite) and one-third full of a drying agent to remove all CO_2 from the air.

(3) Knorr Alkalimeter Unit, C, which consists of a dropping funnel, a distillation flask, and a condenser fitted with standard-taper joints to form a unit assembly.

(4) Gas Washing Bottle, D, containing a solution of 5 to 10 per cent by weight of Ag_2SO_4 in concentrated H_2SO_4. This serves to absorb any water vapor that escapes from the condenser and to remove any HCl from the evolved gases.

(5) Drying Tube, E, containing $CuSO_4$ to absorb any H_2S generated by the absorption of HCl.

(6) Drying Tube, F, filled with a suitable drying agent to effect complete drying.

(7) Absorption Tube, G, filled two-thirds full of soda-asbestos absorbent (Ascarite) and one-third full of a drying agent, to absorb the CO_2.

(8) Absorption Tube, H, filled with a drying agent and soda-asbestos absorbent (Ascarite) in the reverse direction to prevent CO_2 from entering the system.

(9) Trap, I, to prevent back flow of water from the aspirator.

(10) Valve or Pinched Tubing, J, to control the rate of air flow pulled through the system by the aspirator.

(e) Reagents:

(1) Conc. H_2SO_4

(2) Soda-asbestos absorbent (Ascarite)

(3) 10% by wt. Ag_2SO_4

(4) $CuSO_4$

(5) 1:1 by vol. HCl

Determination of Water of Crystallization

10. (a) The sample shall be taken in the same manner from the laboratory test sample from which specimens were taken for the preceding analyses. A specimen shall be taken, weighing about 5 grams and dried to constant weight at 230°F, (110°C), weighing to the nearest 0.001 gram. Call this sample weight W_2.

(b) Procedure - Ignite in a tared procelain crucible the sample which has been dried to constant weight, by placing the crucible and contents in an electric furnace maintained at 1700 to 1750°F (927° to 954°C) and continue the ignition for one hour. Cool in an oven at 110°C and then in a desiccator. Then re-weigh to nearest 0.001 gram.

(c) Calculations:

$$\frac{\text{Original Wt. - Oven Dry Wt.}}{\text{Original Wt.}} \times 100\% = \% \text{ Absorbed Moisture}$$

$$\frac{\text{Oven Dry Wt. - Ignited Wt.}}{\text{Oven Dry Wt.}} \times 100\% = \% \text{ Ignition Loss}$$

The equation for calculating the per cent water of crystallization provides for ignition loss due to evolution of CO_2 from carbonates even though in some cases there may be no CO_2 evolved.

$$\frac{W_2\ (100\% - \%\ CO_2) - W_2\ (100\% - \%\ \text{Ign. Loss})}{W_2\ (100\% - \%\ CO_2)} \times 100\% = \%\ \text{Water Crystallization}$$

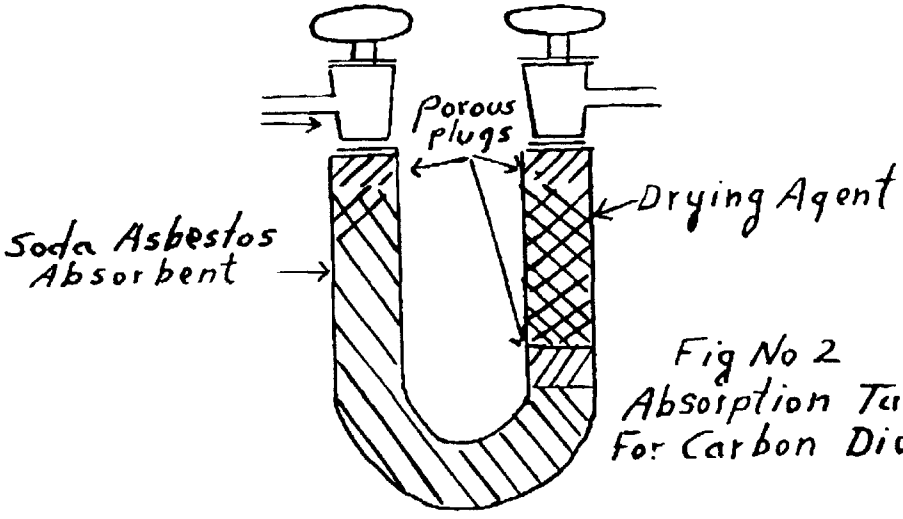

Fig No 2
Absorption Tube
For Carbon Dioxide.

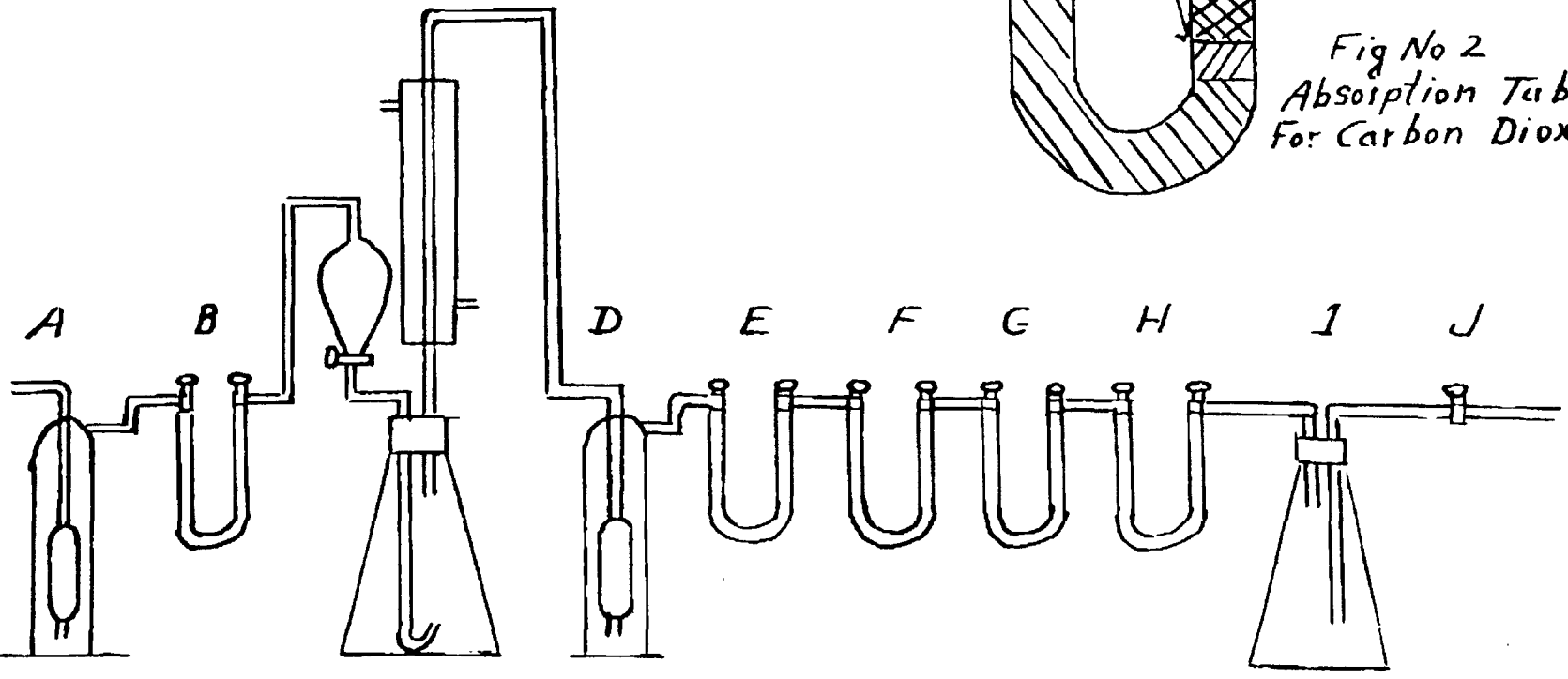

G-2/15

Fig. No 1. Knorr Alkalimeter for Determination of Carbon Dioxide.

ST0720684

Chrysotile Asbestos Test Manual

Third edition

ST0720685

G-3-74

RESIN SORPTION

Revised and adopted by:

Asbestos Textile Institute - 28 Feb 1974

Quebec Asbestos Mining Association - ...

Printed in USA

ST0720686

Method for

RESIN SORPTION

Designation G-3-74

Scope

1. This method of test covers a procedure for determining resin pick-up by asbestos fibre. It is intended to provide comparative values between a sample of fibre and a standard or between two different samples of fibre when the resin is of a liquid phenolic classification.

   It has been established that the apparent surface area of the fibres, as measured by air permeability, and bulk density are major factors influencing the amount of resin picked up by the fibres.

Outline of Method

2. A weighed sample of fibre is compressed to a 6-in. x 6-in. pad by a constant applied load which is subsequently released. The pad of fibre, supported by a perforated screen, is then immersed in a low viscosity phenolic resin solution of specified solids content for a fixed time period. After removal and being allowed to drain freely, the sample is dried and the resin solids content is determined by a standard ignition method for asbestos-phenolic products.

Apparatus

3. (a) Screens - Brass wire with 16 mesh openings and measuring 6-in. x 6-in.

   (b) Mold - Metal mold having a cavity measuring 6-in. x 6-in. x 4-in. deep.

   (c) Press - Shall have a capacity of at least 3600 lb total force to produce a pressure of 100 psi on an area of 36 sq. in. Daylight should be no less than 8 inches with an 8 inch ram movement.

   (d) Balance - Sensitivity of 0.01 grams and capacity of weighing 50 grams.

   (e) Stop watch.

(f) Glass tray - Size to hold 6-in. x 6-in. screen with fibre pad and capacity of 2 quarts, measuring approximately 12-in. x 7-in. x 2-in. deep.

(g) Drying oven - Standard drying oven with solvent exhaust and capable of maintaining 350°F plus or minus 5°.

(h) Muffle furnace - Capable of ignition at 1480°F plus or minus 20°F.

(i) Desiccator

(j) Resin - Phenolic varnish soluble in ethyl alcohol.

(k) Alcohol - Commercial grade ethyl.

Sampling of Asbestos Fibre

4. The sampling shall be in accordance with (A-1) "Method of Sampling and Preparation."

Procedure

5. (a) Fifty grams of fibre shall be evenly distributed in the cavity of the mold with a screen placed at the bottom of cavity.

(b) A load of 100 psi shall be applied for one minute and released.

(c) The compressed pad of fibre and supporting screen shall be removed from the mold as a unit and placed into the tray containing 1500 cc of resin solution of 20 per cent solids and 80 per cent alcohol content.

(d) Pad of fibre shall be allowed to absorb resin solution and become submersed without assistance.

(e) After five minutes of soaking the screen and fibre shall be removed and allowed to drain freely without squeezing.

(f) Upon drying to about 15 per cent solvent content either in the air or low temperature vented oven (120-140°F), the sample shall be tested for resin content by selecting three specimens of about 15 gm each from the impregnated fibre.

(g) Since resin content is based on bone dry weight, the specimens shall be dried for 30 minutes at 350°F plus or minus 5°, removed from oven and cooled to room temperature in a desiccator. Weights shall be taken to the nearest 0.01 gm and recorded.

(h) The specimens shall then be ignited for two hours in a muffle furnace at 900°F followed by one hour at 1480°F plus or minus 20°F.

(i) The specimen shall be removed from muffle and allowed to cool to room temperature before re-weighing to nearest 0.01 gram.

Calculation and Report

6. W_b = Bone dry weight after 1/2 hour at 350°F.

W_a = Ash weight after one hour at 1480°F.

$$\% \text{ resin solids} = 100 - \left[\frac{W_a}{W_b \times .86} \times 100 \right]$$

G
4

0688. A

Chrysotile Asbestos Test Manual

Third edition

G-4-73

MOISTURE CONTENT

ST0720689

Supersedes Method G-4 of the 1966 second edition

Revised and adopted by:

Asbestos Textile Institute - 7 Jun 1973

Quebec Asbestos Mining Association - 29 May 1972

Printed in USA

ST0720690

Method for

MOISTURE CONTENT[1]

Designation G-4-73

1. Scope

1.1 This method covers the determination of the moisture content of asbestos fiber.

2. Summary of Method

2.1 A weighed specimen of fiber is dried in an oven, cooled in a desiccator and re-weighed. The weight loss is used to determine the percent moisture content of the fiber.

3. Significance

3.1 This method will give a value of moisture content obtained under specified conditions. This value should not be considered as an absolute moisture content. Results may not compare with those obtained by the same method under different conditions.

4. Apparatus

4.1 Drying oven capable of maintaining 105 to 110 °C (220 to 230 °F).

4.2 Balance with 0.1 g sensitivity and capacity of at least 400 g.

4.3 Weighing Containers - shallow borosilicate glass dishes or corrosion-resistant metal pans approximately 200 mm (8 in.) in diameter. Examples of suitable containers are glass culture dishes or sifting sieve pans.

4.4 Desiccator.

4.5 Timer.

5. Sampling and Preparation

5.1 In accordance with Method A-1[2], however, omitting section 6 on test conditions. Samples must be contained in moistureproof containers from time of selection to time of testing. During specimen preparation the sample should be coned and quartered without delay to avoid changing the representative moisture of the sample at the sampling location.

6. Procedure

6.1 Weigh out three 50 g test specimens to the nearest 0.01 g simultaneously and spread them evenly into previously tared weighing containers. Record the weight of the containers plus weight of fiber as W_1.

6.2 Dry the specimens in an oven at 105 to 110 °C(220 to 230 °F) for one hour.

6.3 Remove the dried specimens from the oven and cool to room temperature in a desiccator. Weigh the container and dried fiber to the nearest 0.01 g and record as W_2.

Note 1 - Weigh the dried specimens without delay to minimize the gain in weight caused by the rapid absorption of atmospheric moisture due to the hygroscopic nature of dried asbestos. Alternatively, weighing may be carried out in an airtight weighing container.

7. Calculation and Report

7.1 Calculate the moisture percent as follows:

$$\text{Percent moisture} = (W_1 - W_2) \times 100/50.00$$

W_1 = weight of tared container plus 50.00 g of fibre specimen,

and

W_2 = weight of tared container plus dried fibre.

8. Report

8.1 Report the average of three determinations as the percent moisture content of the fiber sample tested.

Note 2 - The atmospheric humidity and temperature at the sampling location may be reported to define the conditions for the

test result more clearly.

9. Precision and Accuracy

9.1 Moisture content of asbestos fiber is dependent on the relative humidity of the atmosphere, so different values will be obtained with different conditions. Generally, this variation will not be significant for normal atmospheric changes.

ST0720693

FOOTNOTES

1. Supersedes designation G-4 in the 1966 second edition. Dates of adoption or latest revisions: Asbestos Textile Institute, adopted 7 Jun 1973, latest editorial revision 28 Feb 1974; Quebec Asbestos Mining Association, adopted 29 May 1972, latest editorial revision 6 Mar 1974.

2. Appears in Chrysotile Asbestos Test Manual, third edition, available from Quebec Asbestos Mining Association, 580 Grande Allée East, Suite 320, Quebec, P.Q., Canada, G1R 2K2.

G
5

0693.A

Chrysotile Asbestos Test Manual

Third edition

ST0720694

G-5-74

SOLUBLE CHLORIDES

Revised and adopted by:

Asbestos Textile Institute -28 Feb 1974

Quebec Asbestos Mining Association - 6 Oct 1972

Printed in USA

ST0720695

G-5

SOLUBLE CHLORIDES

Scope

1. (a) The method covers the volumetric determination of the chloride ion in the leach water used in the extraction of the soluble chlorides from asbestos fiber.

Purity of Reagents

2. (a) Reagent grade chemicals shall be used in all tests. Unless otherwise indicated, it is intended that all reagents shall conform to the specifications of the Committee on Analytical Reagents of the American Chemical Society, where such specifications are available. Other grades may be used, provided it is first ascertained that the reagent is of sufficiently high purity to permit its use without lessening the accuracy of the determination.

   (b) Unless otherwise indicated, references to water shall be understood to mean reagent water conforming to the specifications for Reagent Water (ASTM Designation D-1192). In addition, reagent water shall be free of chloride ion.

Sampling

3. (a) Sample - The sample shall be the laboratory test sample as prescribed in (A-1) "Method of Sampling and Preparation".

   (b) Test Specimen - The 25 gram test specimen shall be derived from the laboratory test sample. Quarter the sample down to approximately one lb as prescribed in the Sampling and Preparation of Fibers, Part 2 (a) through (g). Divide the one lb sample into ten approximately equal portions and sub-divide these portions into halves. Combine a half of each of the ten portions and mix thoroughly. Repeat this operation until the sample weight is reduced to approximately 150 grams. On a smooth clean area spread the 150 gram sample into a thin layer over an area of approximately 20 in. x 20 in. in such manner that pinches may be taken from all parts. Extract with tweezers twenty bundles of long fiber free from rock, grit, or dust, each weighing about 2.5 grams. Spread this into a thin layer and extract at least five bundles of the fiber from different parts so that when these are combined and dried to constant weight at 110°C (230°F) the test specimen will weigh 25 grams ± 0.2 grams.

(c) Preparation of Sample - The test specimen is placed in a tared porcelain crucible and after brought to constant weight at 110°C (230°F) is cooled in a desiccator and weighed on a sensitive gram balance to the fourth decimal place. This weight minus the tare weight is the sample weight, S.

Principle of Method

4. Dilute mercuric nitrate solution is added to an acidified sample in the presence of mixed diphenyl-carbazone bromphenol blue indicator. The end point of the titration is the formation of the blue-violet mercury diphenyl-carbazone complex.

Interferences

5. Zinc, lead, nickel and ferrous and chromous ions affect solution and end-point colors, but do not reduce the accuracy of the titration when present in concentrations up to 100 PPM. Copper is tolerable up to 50 PPM. Titration in the presence of chromate ion requires indicator with extra background color (alphazurine) and prior reduction for concentrations above 100 PPM. Ferric ion above 10 PPM must be reduced before titration, and sulfite ion must be oxidized. A part of bromide ion and fluoride ion will be titrated with the chloride. Quarternary ammonium salts also interfere if present in significant amounts (one to two PPM). Deep color may also interfere.

Apparatus

6. (a) Microburet one ml or five ml, with 0.01 ml graduation intervals.

(b) Soxhlet Extraction Apparatus:

(1) 500 ml Flask 24/40 glass joint, flask to tube.

(2) Extraction Tube, thimble 123 x 43 mm with 55/50 glass joint, tube to condenser.

(3) Condenser with 55/50 glass joint to tube.

(4) Porous Thimble, sample holder.

(c) Oven for drying at 110°C (230°F).

(d) Sensitive chemical gram balance.

(e) Desiccator

(f) Electric Hot Plate, approximately 600 watts.

Reagents and Materials

7. (a) Hydrogen peroxide (30 per cent).

(b) Hydroquinone solution (10 gm per liter). Dissolve one gram of purified hydroquinone in water and dilute to 100 ml.

(c) Mercuric Nitrate Solution (0.025 N). Dissolve 4.2830 gm of $Hg(NO_3)_2.H_2O$ in 50 ml of water acidified with 0.5 ml of HNO_3 (sp. gr. 1.42). Dilute the acidified $Hg(NO_3)_2$ solution with water to one liter. Filter if necessary, and standardize against the standard NaCl solution, using the procedure described in Section 8 (See Note 1).

(d) Mercuric Nitrate Solution (0.0141 N). Dissolve 2.5200 gm of $Hg(NO_3)_2.H_2O$ in 25 ml water acidified with 0.25 ml of HNO_3 (sp. gr. 1.42). Dilute the acidified $Hg(NO_3)_2$ solution with water to one liter. Filter if necessary, and standardize against the standard NaCl solution, using the procedure described in Section 8 (See Note 1).

Note 1: Sharpness of the end point - The point, while sharp, can be improved somewhat for certain types of water by adding to the titration sample several drops of an 0.05 gm per liter solution of Xylene cyanole FF or alphazurine blue green dye (color index 714). These chemicals can be mixed with the indicator in the same proportions.

(e) Mixed Indicator - Dissolve 0.5 gm of crystalline diphenylcarbazone and 0.05 gm of bromophenol blue powder in 75 ml of ethyl alcohol (95 per cent), and dilute to 100 ml with the alcohol (Note 2). Store in a brown bottle and discard after 6 months (Note 3).

Note 2: Denatured alcohol is not suitable. Methanol or isopropanol may be used if pure ethyl alcohol is not available.

Note 3: Liquid indicator generally deteriorates to the point that it yields no end-point color after 12 to 18 months of storage. High temperature (above 100°F) and exposure to bright light may shorten storage life. A dry powder mixture of the two indicator ingredients is stable for much longer periods. Both the powder mixture (capsule form) and the liquid indicator are available commercially.

(f) Nitric Acid (3:997) Dissolve three ml of HNO_3 (sp. gr. 1.42) in water and dilute to one liter.

(g) pH Indicating Paper - Long-range type, covering a pH range one to 11.7

(h) Standard Sodium Chloride Solution (0.025 N). Dry 1.4613 ± 0.0002 gm NaCl for one hour at 600°C, dissolve in water, and dilute to one liter at 20°C in a volumetric flask (Note 4).

Note 4: Drying for two hours at 105°C is adequate for practically all analytical work. If ultimate accuracy of standardization is desired, fuse NaCl and cool it in a desiccator.

(i) Sodium Hydroxide Solution (two gm NaOH per liter). Dissolve two gm of NaOH in water and dilute to one liter.

Procedure

8. (a) Place the sample of fiber which has been dried to constant weight and weighed on a sensitive gram balance to the fourth decimal place in the porous extraction thimble, handling as little as possible to avoid contaminating it with chlorides. Place the thimble with sample in the extraction tube, having the extraction flask a little over half full, approximately 300 ml, with pure reagent water. Start the heat on the hot plate and continue the extraction for three hours from time the water starts boiling. When cool, pour the extract water from the extraction flask into a clean 500 ml volumetric flask. Rinse out the flask thoroughly with pure reagent water and pour this also into the volumetric flask. Then add more reagent water to the 500 ml mark. After thorough mixing, take an aliquot portion of the 500 ml extract water that will not contain more than 20 mg of chloride ion, diluting this sample with reagent water to 50 ml volume if necessary. If the volume of sample contains less than 2.5 mg of chloride ion, make the final titration as described in paragraph (b), with 0.0141 N. $Hg(NO_3)_2$ solution, using a one or five ml microburet. In this latter case, determine an indicator blank on 50 ml of chloride-free water, applying the same procedure followed for the sample. If the sample contains less than 0.1 PPM chloride, concentrate an appropriate volume of sample to 50 ml.

(b) Add five to 10 drops of mixed indicator, and shake or swirl the flask. If a blue-violet or red color develops, add HNO_3 (3:997) dropwise until the color changes to yellow. Add one ml excess acid. If a yellow or orange color forms immediately on addition of the mixed indicator, add NaOH solution (two gm NaOH per liter) dropwise until the color changes to blue-violet; then add HNO_3 (3:997) dropwise until the color changes to yellow and further add one ml excess acid (Note 5).

Note 5: The prescribed acidification provides a satisfactory pH range of 3.0 to 3.5. Acidified samples on which electrometric pH measurements have been made shall not be used for chloride determinations because the use of the Calomel reference

electrode may introduce error due to chloride contamination. Instrumental pH measurements may be made on an aliquot of the sample, the chloride content determined on the balance of the sample being corrected accordingly.

(c) Titrate the solution with 0.025 N. $Hg(NO_3)_2$ solution until a blue-violet color, as viewed by transmitted light, persists throughout the solution (Note 6). Record the milliliters of $Hg(NO_3)_2$ solution added.

(d) If chromate ion is present in the absence of iron and in concentration less than 100 PPM, use the alphazurine modified mixed indicator (Note 1) and acidify the sample as described in paragraph (a) but to pH 3 as indicated by pH indicating paper. Titrate the solution as described in paragraph (b), but to an olive-purple end-point (Note 6).

Note 6: The use of indicator modifications and the presence of heavy metal ions can change solution colors without affecting accuracy of the determination. For example, solutions containing alphazurine may be bright blue when neutral, grayish purple when basic, blue-green when acidic, and blue-violet at the chloride end-point. Solutions containing about 100 PPM nickel ion and normal mixed indicator are purple when neutral, green when acid, and gray at the chloride end-point. When applying this method to samples that contain colored ions or that require modified indicator, it is recommended that the operator familiarize himself with the specific color changes involved by experimenting with solutions prepared as standards for comparison of color effects.

(e) If chromate ion is present in the absence of iron and in concentration greater than 100 PPM, add two ml of fresh hydroquinone solution and proceed as described in paragraph (c).

(f) If ferric ion is present in the absence or presence of chromate ion, use a sample of such volume as to contain no more than 2.5 mg of ferric ion or of ferric ion plus chromate ion. Add two ml of fresh hydroquinone solution, and proceed as described in paragraphs (a) and (b).

(g) If sulfite ion is present, add 0.5 ml of H_2O_2 to 50 ml of the sample in the Erlenmeyer flask and mix for one minute. Then proceed as described in paragraphs (a) and (b).

Calculations

9. Calculate the chloride ion concentration, in parts per million, in the original sample as follows:

$$\text{Chloride, PPM} = \frac{(V_1 - V_2) \times N \times 35{,}500}{S}$$

Where:

V_1 = milliliters of standard $Hg(NO_3)_2$ solution required for the sample.

V_2 = milliliters of standard $Hg(NO_3)_2$ solution required for the blank.

N = normality of the standard $Hg(NO_3)_2$ solution, and

S = grams of sample.

Precision and Accuracy

10. The precision of this method is 0.1 PPM or two per cent of the chloride ion content, whichever is greater. The accuracy is approximately equal to precision in the absence of interferences.

Footnotes:

6. Eastman Kodak No. 4459S diphenyl-carbazone and No. 752 tetrabromophenolsulfonephthalein (bromophenol blue) have been found satisfactory for this purpose.

7. pH Hydrion Paper A-B has been found satisfactory for this purpose.



0700.A

Chrysotile Asbestos Test Manual

Third edition

ST0720701

G-6-63

MAGNETIC RATING

Replaced by Designation G-10-73

The previous designation, G-6, is obtainable from the Asbestos Textile Institute, Box 471, Willow Grove, Pa. 19090, USA.

0701.A

Chrysotile Asbestos Test Manual

Third edition

G-7-72

KEROSENE RETENTION

ST0720702

Supersedes designation G-7 of the 1966 second edition

Revised and adopted by:

Asbestos Textile Institute - ...

Quebec Asbestos Mining Association - 29 May 1972

Printed in USA

ST0720703

Method for

KEROSENE RETENTION[1]

Designation G-7-72

1. Scope

1.1 This method covers the determination of the kerosene retention capacity of asbestos fibre.

2. Summary of Method

2.1 A slurry of asbestos fibre is formed by mixing in kerosene. The slurry is then drained on a standard 177µm(U.S. No. 80) screen[2], and the kerosene that drains out is measured. The quantity of kerosene retained is obtained by difference.

3. Significance

3.1 The kerosene retention value is an indication of the degree of fiberization and of the absorptivity of a given grade of asbestos.

4. Definitions of Terms

4.1 Refer to Definitions A-2[3].

5. Apparatus

5.1 Kerosene drainage cylinder as described in Figs. 1 and 2.

6. Reagents and Materials

6.1 Kerosene meeting the following specifications.

6.1.1 United States of America Federal Specifications, VV-K-211 d, Kerosene, or Jet A Kerosine specified in ASTM Specifications D 1655 for Aviation Turbine Fuels[6].

6.1.2 Canadian Government Specifications Board, 3-GP-3a.

6.1.3 United Kingdom, Ministry of Defense Specification, DEF-2403-A.

7. Sampling

7.1 In accordance with Method A-1[3].

7.2 Two specimens of 50 ± 0.05 g are required.

8. Procedure

8.1 Put a 50 g specimen into a 400 cc beaker and add 325 cc of kerosene.

8.2 Mix with a spatula for 120 s (2 min.).

8.3 Wet the drainage cylinder and screen with kerosene.

8.4 Place a 250 cm^3 graduated cylinder beneath the drainage cylinder outlet.

8.5 Immediately transfer the slurry in one continuous motion to the drainage cylinder.

8.6 Start a stopwatch simultaneously.

8.7 After draining for 900 s (15 min.) read the volume of kerosene drained into the graduate, and record this value.

8.8 Discard the asbestos retained on the screen[4], rinse clean with running hot water, and dry the apparatus. Thus it will be ready for the next test.

8.9 Repeat this procedure with the second specimen.

9. Calculation

9.1 For each of the two readings, subtract the value obtained, in cm^3, from the initial quantity of kerosene (325 cm^3). Multiply these differences by two to obtain the kerosene retention values for 100 grams of asbestos fibre.

9.2 Example: If the reading on the graduated cylinder was 215 cm^3, then the kerosene retention value = (325-215) x 2 = 220 cm^3/100 g.

10. Report

10.1 Report the average of two kerosene retention values in $cm^3/100$ g.

10.2 Fully identify the sample tested as to designation and origin.

11. Precision

11.1 Results on two specimens must agree within 2 percent of the average. If this is not attained, repeat the test until two results within 2 percent from the average are obtained.

11.2 The single-laboratory, multi-operator-apparatus-day precision (repeatability) is ± 2 percent (two sigma limits expressed in units of percentage) as defined in ASTM Recommended Practice E 177[5] over the range of 200 to 600 $cm^3/100$ g.

FOOTNOTES

1. Supersedes designation G-7 in the 1966 second edition. Dates of adoption or latest revision: Asbestos Textile Institute, latest editorial revision 28 Feb 1974; Quebec Asbestos Mining Association, adopted 29 May 1972, latest editorial revision 14 Mar 1974.

2. As described in ASTM Specifications E 11, appearing in the Annual Book of ASTM Standards, Part 41.

3. Appears in Chrysotile Asbestos Test Manual, third edition, available from Quebec Asbestos Mining Association, 580 Grande Allée East, Suite 320, Quebec, P.Q., Canada, G1R 2K2.

4. A jet of clean dry compressed air may be used to accelerate the drying.

5. Annual Book of ASTM Standards, Part 41.

6. Annual Book of ASTM Standards, Part 24.

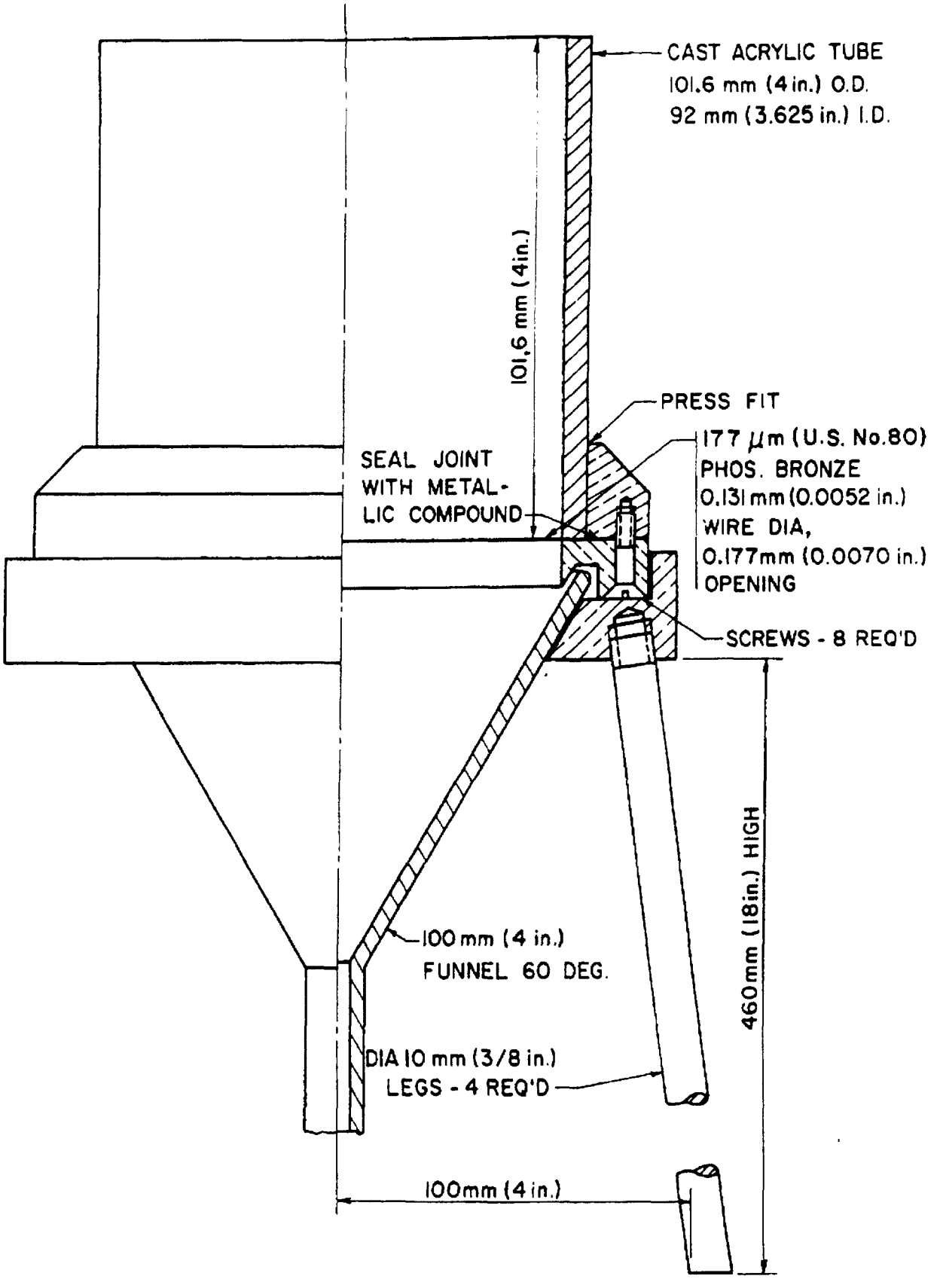

ST0720707

Fig.1— Kerosene Retention Apparatus Assembly

G-7/6

ST0720708

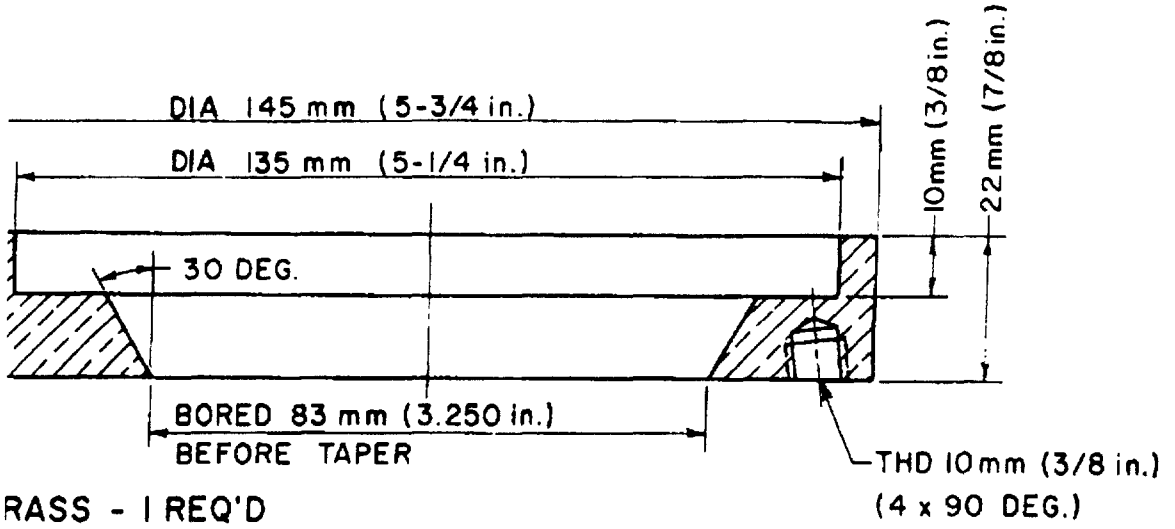

RASS - 1 REQ'D

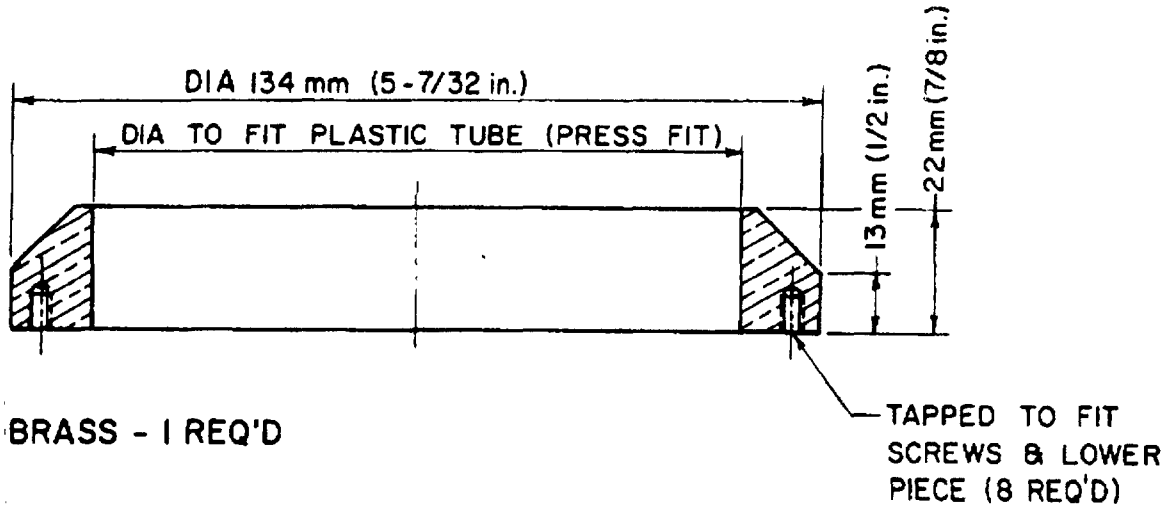

BRASS - 1 REQ'D

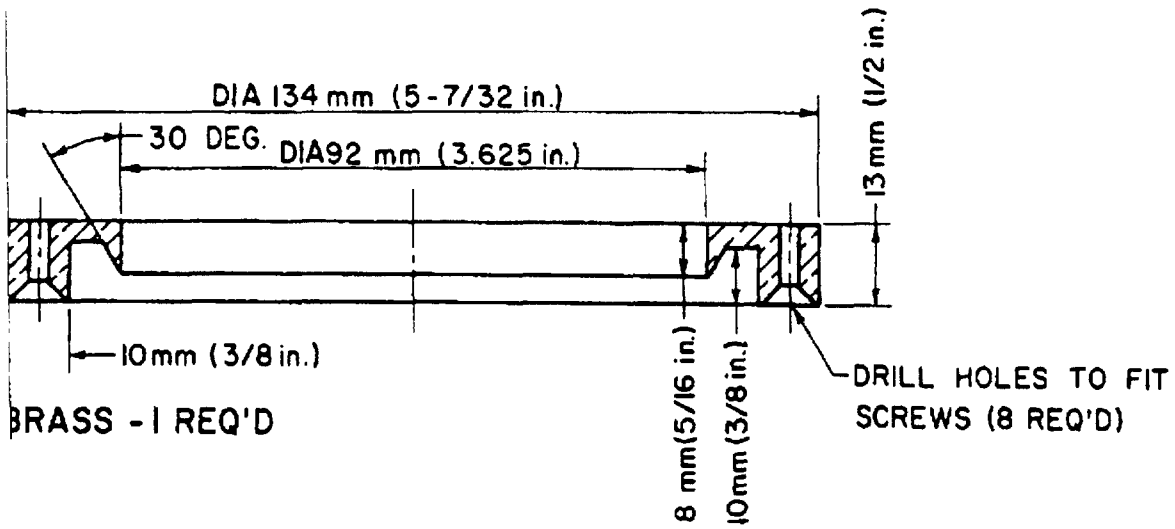

BRASS - 1 REQ'D

Fig.2 — Retention Apparatus Detail

G-7/7

Chrysotile Asbestos Test Manual

Third edition

G-8-72

PENETRATION INDEX

ST0720709

First publication

Revised and adopted by:

Asbestos Textile Institute - ...

Quebec Asbestos Mining Association - 29 May 1972

Printed in USA

Method for

PENETRATION INDEX[1]

Designation G-8-72

1. Scope

1.1 To determine the efficiency with which asbestos fibres increase the consistency when mixed into a liquid asphaltic vehicle, relative to fibres chosen as standard.

1.2 This method of test is applicable to Q.S. Group 7 asbestos fibres[2].

2. Apparatus

2.1 Penetrometer calibrated in 0.1 mm divisions, fitted with a 102.5 ± 0.05 g (3.661 ± 0.0018 oz) grease penetration cone, and conforming to requirements stated in ASTM Method D 217, for Cone Penetration of Lubricating Grease[3, 4].

2.2 Asphalt sample cups 55 mm (2.2 in.) in diameter and 35 mm (1.4 in.) in height, made of seamless tin plate as described in Method D 217.

2.3 Cut-back asphalt containing non-volatile solvent.

Note 1 - Cut-back asphalt SC-70 specified in ASTM Specifications D 2026, for Liquid Asphalt[5]; or MC-O specified in ASTM Specifications D 598, for Cut-Back Asphalt (Medium Curing Type[5]), have been found satisfactory.

Note 2 - The workability of the above cut-back asphalts can be improved by dilution with No. 2 fuel oil as specified in ASTM Specifications D 396, for Fuel Oils[4], up to a proportion of 1/3 with SC-70 or 1/5 with MC-O, by weight.

2.4 Standardized asbestos fibre of known penetration index[6].

3. Sampling

3.1 In accordance with Method A-1[7].

4. Calibration

4.1 Insert the shaft of the grease cone into the hollow shaft of the penetrometer and fasten securely. The shaft and movable attachments of the penetrometer weigh 47.5 g (1.709 oz) and the grease cone 102.5 g (3.579 oz), thus the total moving load is 150 g (5.385 oz).

4.2 Set the penetrometer to approximate height so that the sample cup can be positioned under the penetration cone. Make sure that the penetrometer is level.

4.3 Determine the tare weight of a No. 6 porcelain evaporating dish.

4.4 Agitate the cut-back asphalt to ensure uniformity.

4.5 Weigh out 100 grams (3.489 oz) of cut-back asphalt into the evaporating dish. A teaspoon may be used in adjusting the weight.

4.6 Weigh out the designated quantity of standardized fibre on top of the cut-back asphalt. The designated quantity may be determined from the following formula:

4.6.1 Standardized fibre quantity

= 5000/(Penetration Index), in grams.

= {179.7/(Penetration Index)}, in ounces.

4.6.2 Examples

4.6.2.1 If the penetration index is 80, the designated quantity is 5000/80 = 62.5 g (179.7/80 = 2.25 oz).

4.6.2.2 If the penetration index is 125, the designated quantity is 5000/125 = 40.0 g (179.7/125 = 1.44 oz).

4.7 Mix thoroughly the fibre and asphalt with a spatula.

4.8 Fill a sample cup with the mixture, making sure that there are no voids or air pockets. This may be accomplished by adding the mixture in four or five increments, filling the bottom corners first, and smoothing the mixture with the spatula, using a rotary motion, after each addition. Fill level to top of cup, and strike it off smooth with the spatula held at an angle to avoid pulling the surface of the material.

4.9 Adjust the penetrometer so that the tip of the grease penetration cone just touches the surface of the mixture in the center of the cup.

4.10 Depress the clutch and allow the grease cone to drop

for exactly 5 s. Record the amount of drop to 0.1 mm.

4.11 Reposition the grease cone and remove the cup from under the penetrometer. Clean the grease cone. Paper towels may be used for this purpose.

4.12 Add a small quantity of mix to the contents of the sample cup, 5 to 10 cm^3 (0.3 to 0.6 $in.^3$), so as to have an excess. Using the spatula, remove the top half of the mixture from the sample cup and replace it upside down. Strike off smooth and take another reading as in 4.9 to 4.11.

4.13 Again add a small quantity of mix to the sample cup so as to have an excess. Using the spatula, remove nearly all of the mixture from the cup and replace it upside down in the cup. Strike off smooth and take another reading as in 4.9 to 4.11.

4.14 Compare the three readings and if the variation does not exceed 0.4 mm, calculate their average. This average is to be used as the target penetration against which samples to be tested will be compared.

Note 3 - If the three readings are not within the allowable variation of 0.4 mm, another fresh surface should be turned up and the test repeated. If three of the four readings fall within the allowable variation, those three values shall be averaged. If not, the test should be entirely repeated using a new mixture.

Note 4 - Cups and evaporating dishes may be cleansed with kerosene, and are to be dry when used. Determine the tare weight of the dish for each test.

5. Procedure

5.1 The objective of the test is to determine what quantity of the fibre under examination must be mixed with 100 g (3.489 oz) of cut-back asphalt to give the same penetration as the target penetration.

5.2 The final weight of fibre required for determination of the penetration index is calculated by interpolation from results on two different mixtures. These two readings have to be above and below the target, and must be within 20 units (2 mm) from the target.

5.3 Mix the cut-back asphalt and weigh out 100 g (3.489 oz) into the evaporating dish.

5.4 Weigh out a quantity of the fibre to be tested. If this fibre is thought to be more absorbent than the standardized fibre, weigh out a quantity less than the amount of standardized fibre used. Conversely, if this fibre is thought to be less absorbent

than the standardized fibre, weigh out a quantity greater than the amount of standardized fibre used.

5.5 Mix and test as for the standard reference fibre.

5.6 Repeat with new quantities of fibre until mixes are arrived at which will give within 20 units (2.0 mm) of the target penetration.

Note 5 - The test should be performed at room temperature, and the asphalt cut-back and fibre should be conditioned to this temperature.

Note 6 - The cone should be thoroughly cleansed after each penetration.

Note 7 - The calibration and procedure should be performed as a continuous operation, without delay or interruption, thereby avoiding any risk of the mixture thickening due to exposure.

Note 8 - The calibration should be repeated daily, or more often if laboratory conditions change significantly. Each operator who performs the test must perform his own calibration.

6. Calculations

6.1 The penetration index is calculated as follows:

$$\text{Penetration index} = 5000/A$$

$$= 179.7/B$$

Where A is the quantity of fibre, in grams, required to give the target penetration as described in section 5, and B is the quantity in ounces.

7. Precision and Accuracy

7.1 Reproducibility within ± 6 percent is obtainable by this method of test.

FOOTNOTES

1. First publication. Dates of adoption or latest revisions: Asbestos Textile Institute, latest editorial revision 28 Feb 1974; Quebec Asbestos Mining Association, adopted 29 May 1972, latest editorial revision 14 Mar 1974.

2. Quebec Standard (Q.S.) designation of chrysotile asbestos grades.

3. An automatic clutch is a permissible optional accessory.

4. Annual Book of ASTM Standards, Part 24.

5. Annual Book of ASTM Standards, Part 15.

6. Obtainable from QAMA Testing Research Laboratory, University of Sherbrooke, Sherbrooke, P.Q., Canada, J1K 2R1. Price $5.00 per sample.

7. Appears in Chrysotile Asbestos Test Manual, third edition, available from Quebec Asbestos Mining Association, 580 Grande Allée East, Suite 320, Quebec, P.Q., Canada, G1R 2K2.

G
9

Chrysotile Asbestos Test Manual

Third edition

G-9-73

T & N MAGNETIC RATING

ST0720715

First publication

Revised and adopted by:

Asbestos Textile Institute - 7 Jun 1973

Quebec Asbestos Mining Association - 15 Mar 1973

Printed in USA

ST0720716

Method for

T & N MAGNETIC RATING[1]

Designation G-9-73

1. Scope

1.1 This method covers the procedure for the determination of the magnetic rating of asbestos fiber and asbestos textile products. This method is used primarily for testing asbestos electrical insulating materials.

Note 1 - For other ASTM standards on asbestos fiber and asbestos textiles, refer to D 299, D 315, D 375, D 628, D 1061, D 1571, D 2100 and D 2590. For other standards on asbestos fiber, see footnote 3.

2. Applicable Documents

2.1 ASTM Standards:

D 123 Definitions of Terms Relating to Textile Materials[2].
D 299 Specification and Tests of Asbestos Yarn[2].
D 315 Specification and Tests for Asbestos Tape - Woven[2].
D 375 Specification and Tests for Asbestos Roving[2].
D 628 Specification and Tests for Asbestos Tubular Sleeving[2].
D 1061 Specification and Tests for Asbestos Lap[2].
D 1571 Specification and Tests for Asbestos Cloth - Woven[2].
D 2100 Specification for Asbestos Textile Used for Electrical Insulating Purposes[2].
D 2590 Sampling Asbestos Fiber for Testing[2].

2.2 ATI and QAMA Standards[3]:

A-1 Sampling Asbestos for Testing
A-2 Definitions of Terms Relating to Asbestos
G-10 Mapes Magnetic Rating of Asbestos

3. Definitions

3.1 Asbestos fiber, n. - for the purposes of this method, asbestos fiber is the hydrous magnesium silicate serpentine mineral

designated as chrysotile and having the empirical formula $Mg_3Si_2O_5(OH)_4$.

3.2 Magnetic rating (MR), n. - an empirical value that reflects the effect of the magnetic particles, such as magnetic iron compounds, in asbestos material as measured by a magnetic analyzer. It is not a quantitative measure of the number of magnetic particles in the material.

3.3 Atmosphere for testing asbestos textiles, n. - air maintained at a relative humidity of 50 ± 2 percent at 70 ± 2 °F (21 ± 1.1 °C).

3.4 For definitions of other textile terms used in this method, refer to Definitions D123.

4. Summary of Method

4.1 The unknown electromagnetic effects of a sample of asbestos material are compared with those of a reference standard in a magnetic analyzer. The inductive imbalance caused by the magnetic particles in the asbestos sample is amplified and measured with the magnetic analyzer.

5. Uses and Significance

5.1 This method of testing magnetic rating is considered satisfactory for acceptance testing of commercial shipments of asbestos fiber and asbestos textile products because current estimates of between-laboratory precision are acceptable. In cases of dispute the statistical bias, if any, between the laboratory of the purchaser and the laboratory of seller should be determined with each comparison being based on testing randomized specimens from one sample of material.

5.2 Magnetic rating is one of the measurements used for determining the suitability of an asbestos material for electrical insulation.

5.3 The electrical insulating properties of asbestos materials vary inversely with the magnetic rating. Therefore, a low magnetic iron content is required for good electrical insulation.

5.4 The types of asbestos textiles classified by magnetic rating are described in Specification D 2100.

6. Apparatus

6.1 Magnetic Analyzer[4], with constant-voltage transformer. This apparatus is shown schematically in Figs. 1 to 4. The analyzer consists of two cylindrical coils forming part of an alternating current bridge. When the test specimen is inserted into one of the coils, the resulting unbalanced current is amplified and used as a measure of magnetic rating.

Note 2 - The apparatus and procedure described in this method are preferred. The method and apparatus described in method G-10 may be used if agreed upon by the purchaser and the seller.

6.1.1 Magnetic Analyzer Accessories, including specimen tube, holder, spacer rod, and stopper.

6.2 Calibration Standards [4], supplied by the vendor of the magnetic analyzer.

7. Sampling

7.1 Refer to Method A-1 for sampling fiber[3]. Refer to the appropriate ASTM standards for the lot size of each other type of material to be tested.

7.2 Take sufficient samples at random from each shipment or lot of the asbestos fiber or textile to prepare specimens as directed in Section 9.

8. Conditioning

8.1 Condition all samples (without preconditioning) for a minimum period of 4 h, or until the material shows no progressive change in weight of more than 0.1 percent after an exposure of an additional 0.5 h, in an atmosphere having a relative humidity of 50 ± 2 percent at 70 ± 2°F (21 ± 1.1°C).

9. Preparation of Test Specimens

9.1 Asbestos Fiber:

9.1.1 Take an approximately 200 g sample of asbestos as directed in Method A-1[3].

9.1.2 Spread the sample of asbestos fiber on a smooth working surface in layers to form a pile of uniform thickness approximately 12.5 mm (0.5 in.) thick.

9.1.3 Take five 15 ± 0.1 g specimens in small increments,

being careful that the total cross section of the pile from top to bottom is taken, including all particles which may have become separated.

9.1.4 Load the specimen into the tube and depress with the spacer rod. Adjust the height of the specimen with the spacer rod to 68.5 ± 2.5 mm (2.7 ± 0.1 in.), remove the spacer rod and maintain the height with a stopper.

9.2 Asbestos Textile Products:

9.2.1 Lap - Cut rectangular pieces of lap approximately 75 mm (3 in.) square from across the width to secure a weight of 15 ± 0.1 g. Load the specimen as described in 9.1.4.

Note 3 - The term 'weight' is temporarily used in this standard because of established trade usage. The word weight is used to mean both 'force' and 'mass', and care must be taken to determine which is meant in each case (SI unit for force = newton and for mass = kilogram).

9.2.2 Tape, Sleeving and Cloth - Cut lengths of material to secure a weight of 15 ± 0.1 g by removing or adding material cut lengthwise. Load the specimen lengthwise into the tube and depress to the proper height with a spacer rod. Adjust the height of the specimen with the spacer rod to 68.5 ± 2.5 mm (2.7 ± 0.1 in.), remove the spacer rod and maintain the height with a stopper.

10. Verification of the Calibration of the Magnetic Analyzer

10.1 Start the magnetic analyzer by turning the range selector switch to 'standby' and allow it to warm up for at least 10 min. Adjust the apparatus as described in 10.2 and 10.3.

10.2 Turn the range selector switch to position 10 without any specimen in the apparatus. Balance the magnetic circuit to give the smallest possible reading of the meter pointer by adjusting the magnetic balance control (left-hand dial). Balance the resistive component of the bridge (right-hand dial) to bring the meter to a zero reading. Move the switch to the more sensitive ranges: 3, 1 and 0.3. For each range repeat the magnetic and resistive balance procedures. Turn the switch back to position 10.

10.3 Carefully insert the calibration standard of the highest MR value into the hole above the magnetic balance control knob as far as it will go. Turn the appropriate calibration adjustment (under the meter) until the pointer indication is the same as the nominal value of the calibration standard. Repeat the calibration on each of the more sensitive ranges, using the

appropriate calibration standards. Recheck the magnetic and resistive balance, between the operations of checking successive ranges. Turn the switch to 'standby' position.

11. Procedure

11.1 Start with the selector switch in position 10 to establish the proper testing range and carefully insert the loaded specimen tube into apparatus as far as it will go. If the reading exceeds 3.0 on the upper set of graduations of the meter scale, record the indicated reading as the MR of the specimen to the nearest 0.2, otherwise proceed as follows:

11.1.1 When the reading in 11.1 is less than 3.0, turn the switch to the 3-MR range. If the reading exceeds 1.0 on the lower set of graduations record the indicated reading as the MR of the specimen to the nearest 0.1.

11.1.2 When the reading in 11.1.1 is less than 1.0, turn the switch to 1-MR range. If the reading exceeds 0.3 on the upper set of graduations, record the indicated reading as the MR of the specimen to the nearest 0.02.

11.1.3 When the reading in 11.1.2 is less than 0.3, turn the switch to 0.3-MR range and record the indicated reading on the lower set of graduations as the MR of the specimen to the nearest 0.01.

11.2 After obtaining a reading in the above manner, remove the specimen tube, verify the zero point, and recheck the calibration using the appropriate magnetic calibration standard for that range. Reinsert the specimen tube and verify the MR value of the specimen.

Note 4 - The procedure here described is applicable only under those conditions wherein the magnetic particles being tested exhibit no directional properties or when the particle distribution is such as to give the ultimate in random orientation. The magnetic particles present in chrysotile asbestos, however, are most frequently needlelike or pseudo-fibrous and as such exhibit directional properties with regard to magnetic permeability. Therefore, there must be an understanding as to the extent of the fibrous characteristics and the grain size distribution of the magnetic particles present in the sample under test if a proper evaluation of the resulting magnetic rating is to be truly factual. In view of the fibrous characteristics of the magnetic particles and the resultant directional magnetic properties, the method of sample preparation and the placement of the sample in the sample holder must be carefully pursued in an endeavor to obtain a test specimen that will exhibit a maximum in random orientation.

11.3 Proceed as directed in 11.1 and 11.2 on the remaining specimens.

12. Report

12.1 State that the specimens were tested as directed in Method G-9.

12.2 Report the average magnetic rating.

13. Precision and Accuracy

13.1 Interlaboratory Test Data - An interlaboratory test was run[5] in 1969 in which 13 samples were each tested in 7 laboratories using 1 operator per laboratory; each operator tested 2 specimens of each sample. All 26 specimens of each material came from the same lot. The components of variance for magnetic rating results expressed as coefficients of variation were calculated to be:

Single-operator component	4.4	percent of the average
Between-laboratory component	9.4	percent of the average

13.2 Precision - For the components of variance reported in 13.1, two averages of observed values should be considered significantly different at the 95 percent probability level if the difference equals or exceeds the critical differences listed below.

TABLE 1 Critical Differences

Number of observations in each average	Critical differences for the conditions noted[a] Percent of grand average: Single operator precision	Between-laboratory Precision
1	12.2	28.7
2	8.6	27.4
5	5.5	26.6
10	3.8	26.3

[a]The critical differences were calculated using t = 1.960 which is based on infinite degrees of freedom.
To convert the values as listed above to units of measure, multiply the average of the two specific sets of data being compared, by the critical differences expressed as a decimal fraction.

ST0720722

13.3 Accuracy - No justifiable statement on the accuracy of Method G-9 for the measurement of magnetic rating can be made since the true value cannot be established by an accepted referee method.

Note 5 - The values of the critical differences in Table 1 should be considered to be a general statement particularly with respect to between-laboratory precision. Before a meaningful statement can be made about two specific laboratories, the amount of statistical bias, if any, between them must be established, with each comparison being based on recent data obtained on randomized specimens from one sample of the material to be tested.

FOOTNOTES

1. First publication. Dates of adoption or latest revisions: Asbestos Textile Institute, adopted 7 Jun 1973, latest editorial revision 28 Feb 1974; Quebec Asbestos Mining Association, adopted 15 Mar 1973, latest editorial revision 14 Mar 1974. Taken mainly from ASTM Method D 1118, with permission, and modified in keeping with the requirements of the Chrysotile Asbestos Test Manual[3]. Method D 1118 is under the jurisdiction of the ASTM Committee D-13 on Textile Materials and is the direct responsibility of Subcommittee D-13.14 on Asbestos Textile Products. The test method is reprinted in this manual in this revised form with the permission of ASTM Headquarters.

2. Annual Book of ASTM Standards, Part 33.

3. Appears in Chrysotile Asbestos Test Manual, third edition, available from the Quebec Asbestos Mining Association, 580 Grande Allée East, Suite 320, Quebec, P.Q., Canada, G1R 2K2.

4. The apparatus known as the Turner and Newall Magnetic Analyzer can be purchased from Turner & Newall Ltd., Asbestos Fibre Laboratory, Trafford Park, Manchester, England M17 1RU. Detailed drawings of the apparatus are on file at ASTM Headquarters, 1916 Race Street, Philadelphia, Pa. 19103, U.S.A. Detailed information on the preparation of calibration standards is available on loan the same source.

5. The interlaboratory Test data and statistical calculations are included in research report number D-13-1021 and are available on loan from ASTM Headquarters, 1916 Race St., Philadelphia, Pa. 19103.

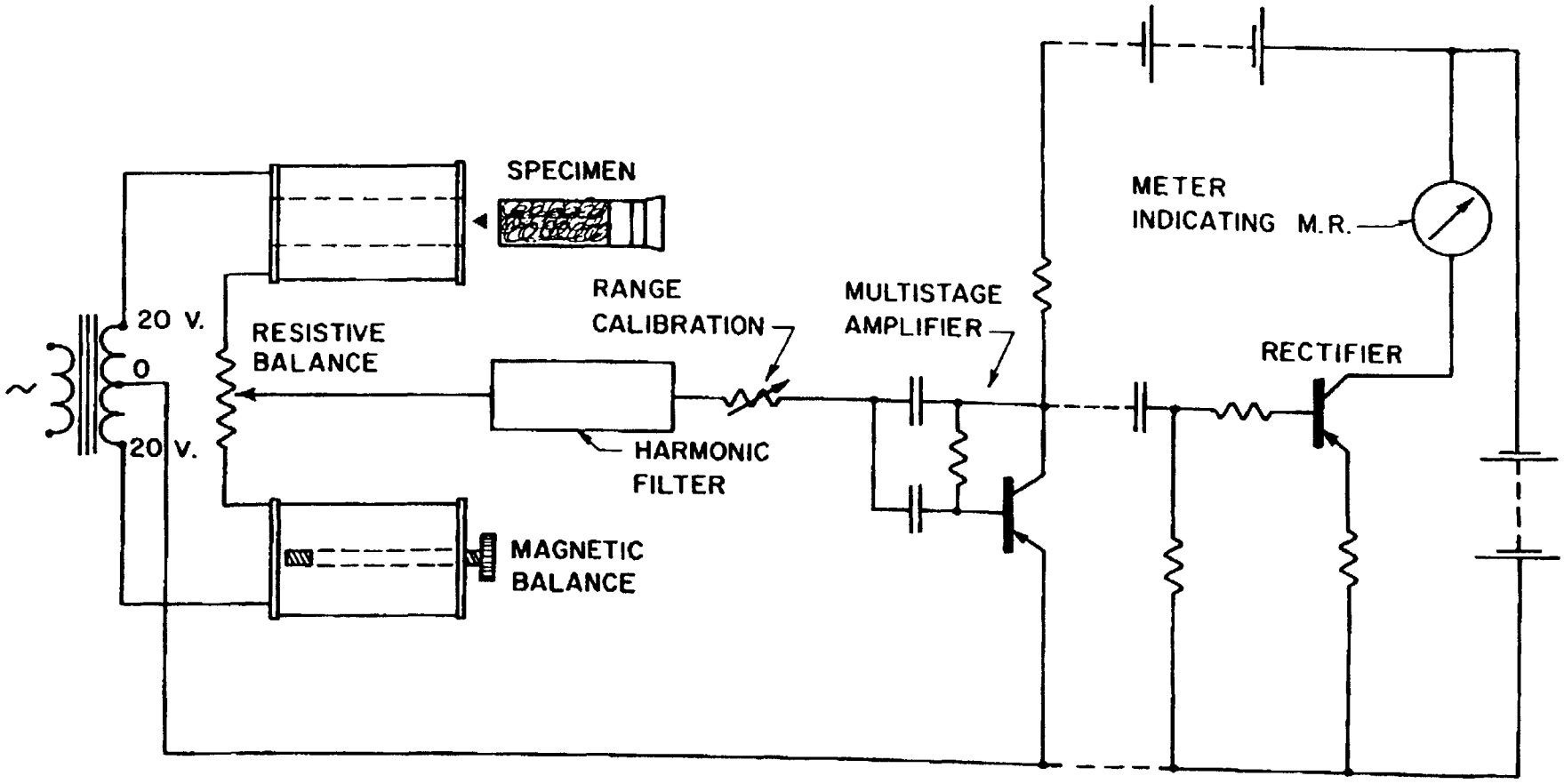

G-9/10

Fig.1- Schematic Diagram of Turner and Newall Magnetic Analyser

ST07207Z4

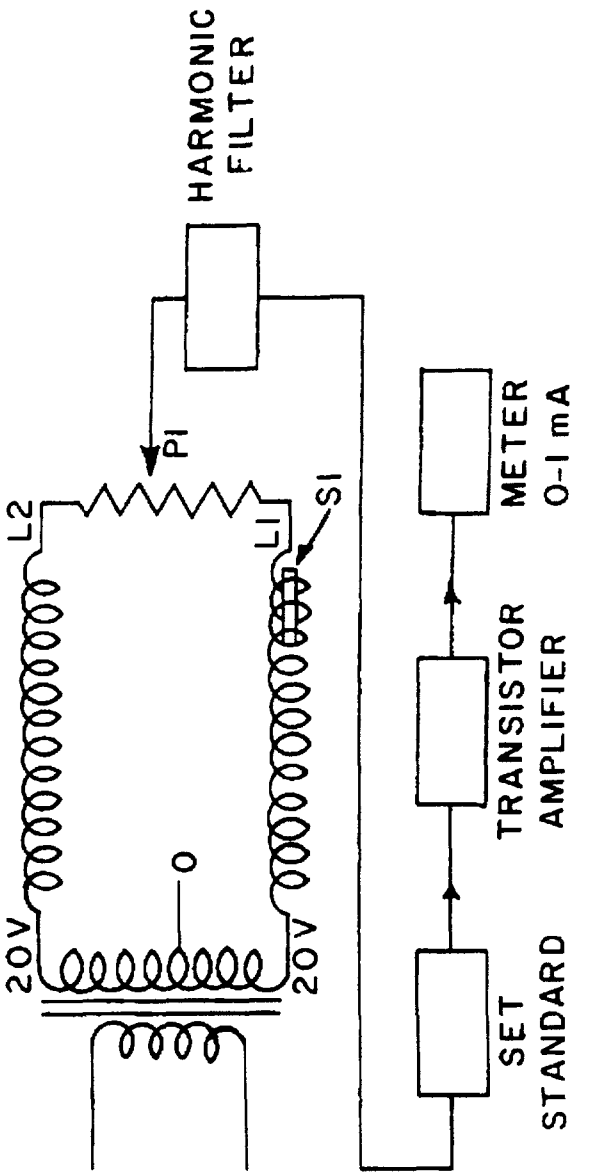

Fig.2- Magnetic Analyser. Principle of Method

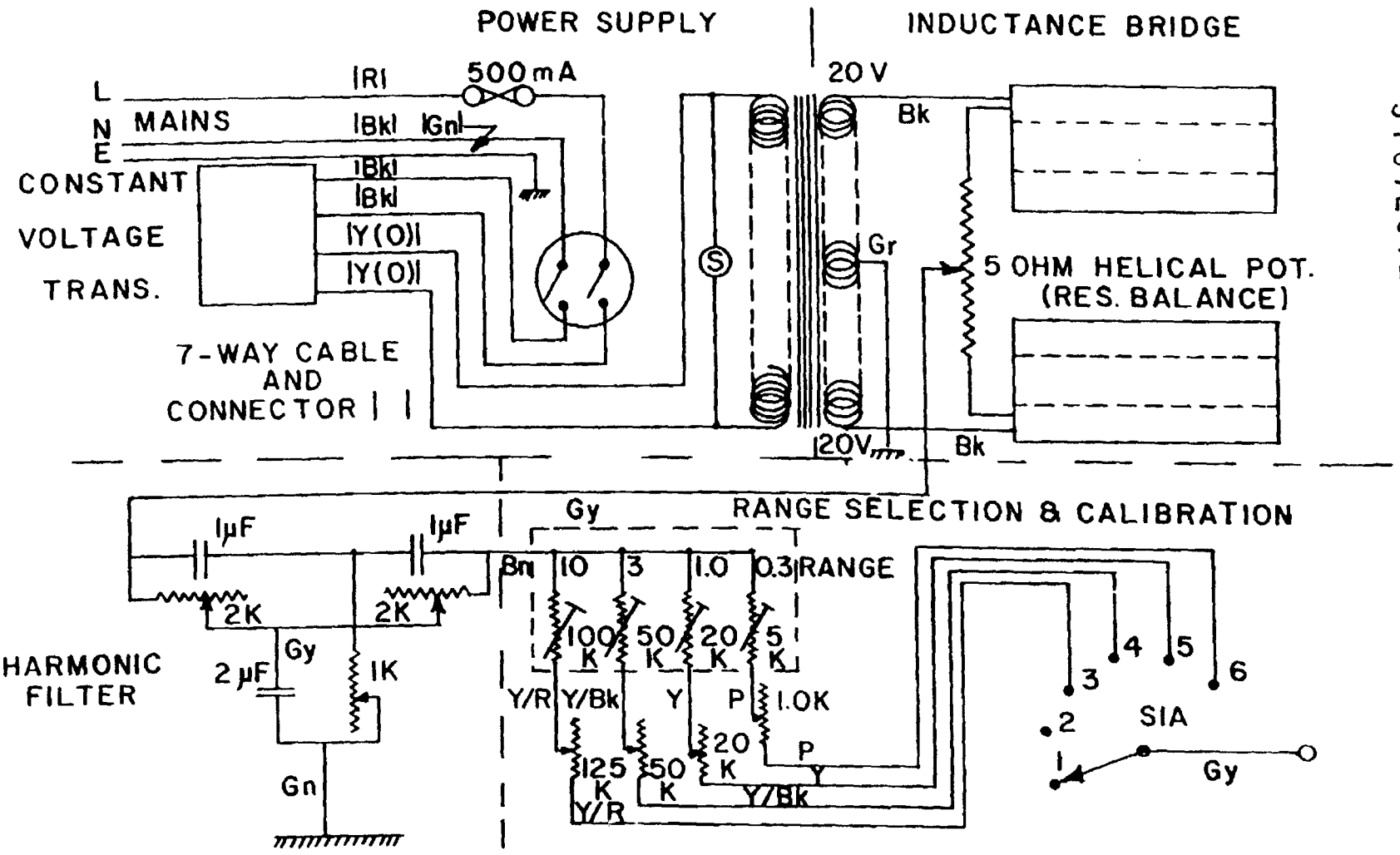

ST0720726

G-9/12

Fig.3- Magnetic Analyser. Power Supply, Bridge, Harmonic Filter and Range Selector

ST0720727

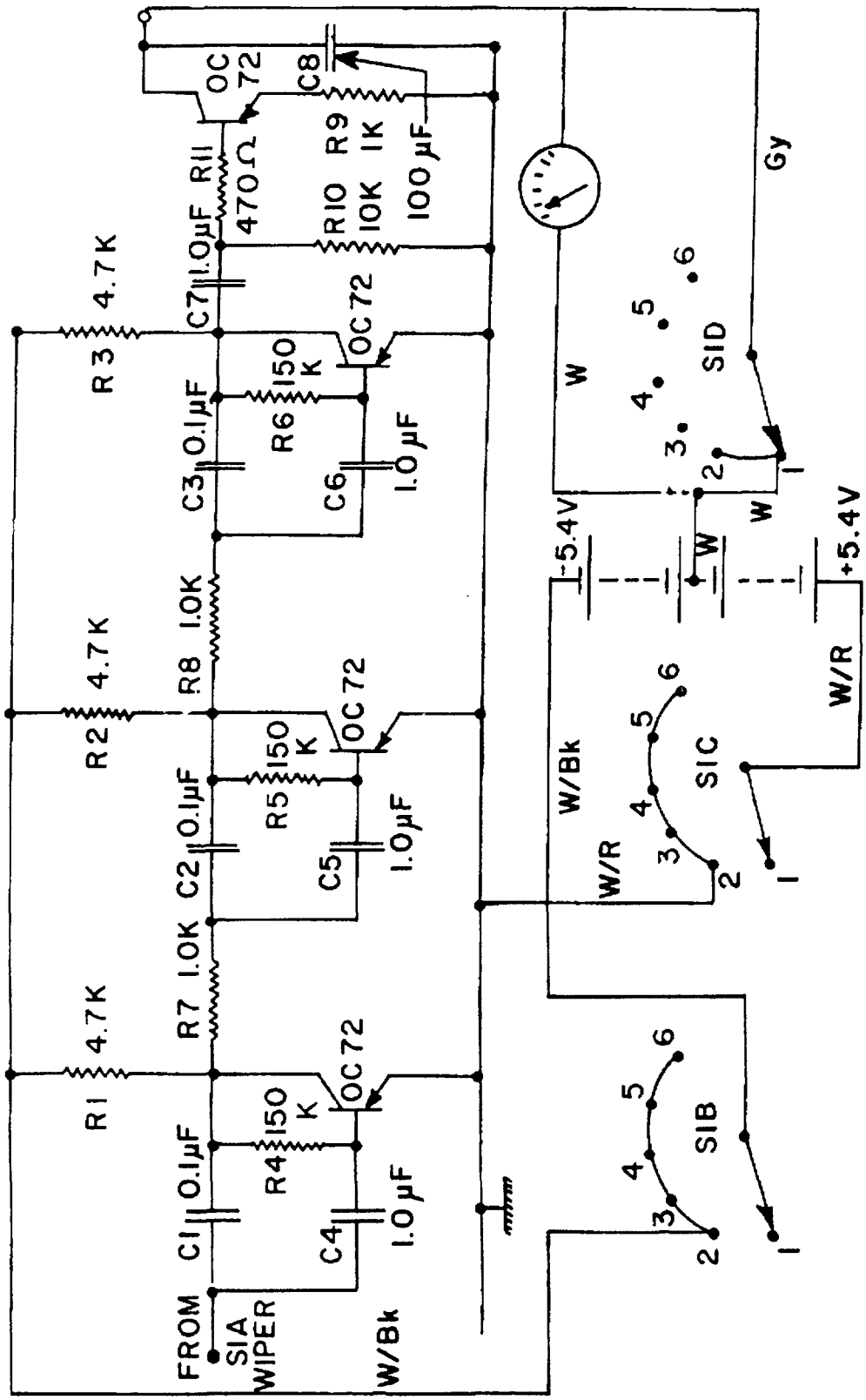

Fig.4- Magnetic Analyser. Amplifier, Meter and Switching

G-9/13

Chrysotile Asbestos Test Manual

Third edition

G-10-74

MAPES MAGNETIC RATING

ST0720728

Supersedes designation G-6 of the 1966 second edition

Revised and adopted by:

Asbestos Textile Institute - 28 Feb 1974

Quebec Asbestos Mining Association - 15 Mar 1973

Printed in USA

ST0720729

Method for

MAPES MAGNETIC RATING[1]

Designation G-10-74

1. Scope

1.1 This method covers an alternative procedure for the determination of the magnetic rating of asbestos by comparing its magnetic effect with that of a known standard. Results are an estimate of the quantity of magnetic compounds present and are empirically expressed as magnetic rating (MR).

1.2 Magnetic rating is an approximate estimate only of the magnetite content. It actually measures the magnetic effect of the magnetic compounds in a given specimen, which depends upon and varies with the permeability, size, shape, orientation, dispersion and composition of the magnetic particles in addition to their quantity.

1.3 Method G-9 for Turner and Newall Magnetic Rating of Asbestos[2] is the recommended method[3]. However, this method is being continued in view of the large number of laboratories still using the Mapes analyzer.

2. Summary of Method

2.1 The Mapes analyzer consists essentially of a primary induction coil wound around two secondary coils. The latter are wound in opposing directions and connected in series so that induced voltages oppose and cancel each other so that no current flows.

2.2 A specimen is packed into a non-magnetic container and placed in the cavity of one secondary coil, thus increasing the induced voltage and causing a current to flow which is measured on a galvanometer.

2.3 The magnetic effect of the specimen is thus evaluated and may be rated against a known standard to obtain the magnetic rating.

3. Significance

3.1 This method for the determination of magnetic rating is considered satisfactory for acceptance testing of commercial shipments of asbestos fibres, papers, felts, yarns, rovings and textile products because current estimates of inter-laboratory precision are acceptable.

3.2 In cases of dispute between buyer and vendor, referee testing should be carried out by both, based on randomized specimens from one representative sample.

3.3 Magnetic Rating is one of the measurements used for evaluating the suitability of an asbestos material for electrical insulation.

3.4 The electrical insulating properties of asbestos materials vary inversely with the magnetic rating. Therefore, a low magnetic iron content is required for good electrical insulation.

3.5 The type of asbestos textiles classified by magnetic rating are described in ASTM Specifications D 2100 for Asbestos Textile Used for Electrical Insulating Purposes[4].

4. Definitions

4.1 magnetic rating (MR) - an empirical value reflecting the effect of the magnetic particles, such as magnetic iron compounds, in asbestos material as measured by a magnetic effect analyzer. It is not a quantitative measure of the magnetic particles in the material.

4.2 unit magnetic rating (1 MR) - a calibrating standard with an MR of one is defined as containing 0.18 g of National Bureau of Standards standard sample No. 29 (a) of iron ore (magnetite)[5] uniformly distributed over the space specified for a 10-g test specimen {14 mm (0.75 in.) diameter by 73 mm (2.875 in.) long}, by dispersion in a magnetically inert material.

4.2.1 A 10-g specimen has one unit magnetic rating when it produces a magnetic effect equivalent to that of 0.18 g of standard magnetite as described above.

4.2.2 Conversely, a 10-g specimen producing a magnetic effect such that the resulting induced current in the Mapes analyzer galvanometer is k times that of the 0.18 g of standard magnetite as described above, would have a magnetic rating of MR of k.

4.3 Additional definitions are given in Definitions A-2[2].

5. Apparatus

5.1 Mapes analyzer as described in Fig. 1 and in Annex A1. Provide the analyzer with a two-stage resistance-coupled Class A amplifier[6], having sufficient resistance to permit the use of a low sensitivity scale of MR 6. A voltage divider connected at the input to the primary coil will allow full scale deflection of the galvanometer for each MR scale. This may consist of a multi-pole switch and accurate resistors of suitable rating connected in parallel.

5.1.1 Other apparatus designed on principles of induction basically similar to the analyzer specified herein, are acceptable providing their performance can be proven to be satisfactory and equivalent.

5.2 Voltage regulator to supply the analyzer with 115 V, 60 Hz ac free of voltage fluctuations which occur in the power source.

5.3 Nonmetallic and non-magnetic test specimen holders made of materials such as wood or plastic, as described in Fig. 2 and in A 1.3. Plastic is favored by some on account of the tendency of wooden holders to warp.

5.4 Reagent quality zinc oxide.

5.5 Standard sample of magnetite {No. 29 (a)}from the National Bureau of Standards, or standard magnetite which has been calibrated against sample No. 29 (a)[5].

6. Sampling

6.1 In accordance with Method A-1[2]

7. Test Specimens

7.1 Take five specimens of 10 ± 0.01 g each.

7.2 Take special care to avoid shaking out and loosing any of the grit and magnetic particles. Each fraction shall contain the total cross-section of the sample pile from top to bottom at the point where the aliquot is taken, including any grit or fines which may have segregated at the bottom.

7.3 Asbestos paper, board, felt, yarn, roving or textile products shall be cut, chopped or broken into small pieces so that they can be packed into the test specimen holder with random orientation. Alternatively, refer to Method G-9[2] for acceptable techniques of loading the test specimens.

8. Calibration and Standardization

8.1 Preparation of standards.

8.1.1 Prepare calibrating standards with MR values of 0.5, 1, 3 and 6 in the manner described below:

8.1.2 Weigh accurately the amount of standard magnetite required for each desired standard. For example, if sample 29 (a) from the National Bureau of Standards is used, weights of 0.09, 0.18, 0.54 and 1.08 g respectively, are required for MR 0.5, 1, 3 and 6.

8.1.3 Mix thoroughly with stepwise additions of zinc oxide (the quantity of zinc oxide must be determined by trial and error, but may not exceed the capacity of the specimen holder) and press firmly into the cavity of a specimen holder.

8.1.4 Cement the stopper of the specimen holder in place with a nonmagnetic cement.

8.1.5 Since the MR values of the calibrating standards may be materially changed by tapping, dropping or excessive handling (due to segregation and orientation) prepare standards in duplicate. Use one set as working standards and the other as permanent reference standards.

8.2 Analyzer calibration.

8.2.1 Plug the amplifier and detector coils into the voltage regulator and energize the latter. Allow the system to warm up and to become thermally stable.

8.2.2 If the apparatus is fitted with a voltage divider, set this at the most sensitive range, and increase the amplifier gain control to the maximum.

8.2.3 If the galvanometer does not register zero, this indicates that the two secondary coils are not in complete balance. Balance the secondary coils by moving the balancing coil closer to or farther from one secondary coil until a zero reading on the galvanometer is obtained, as described in A1.2. This setting should not have to be readjusted unless the coils are jolted or some significant parameters have changed.

8.2.4 If a voltage divider is used, set this at the MR 1 range.

8.2.5 Set the amplifier gain control at its minimum value.

8.2.6 Insert the MR 1 standard into the core of the proximate secondary coil. Adjust its position to maximize the galvanometer deflection.

8.2.7 Raise the amplifier gain control until full scale deflection of the galvanometer results.

8.2.8 Calibration with a voltage divider.

8.2.8.1 If a voltage divider is fitted, switch it to the MR 3 and MR 6 scales and note the galvanometer readings. If these readings are respectively 1/3 and 1/6 of full scale, then the response of the system may be considered linear. Otherwise, draw a calibration curve which may be used for interpreting galvanometer readings.

8.2.8.2 Insert each of the other standards in turn, using the corresponding voltage divider setting and note the resulting galvanometer deflections. If these are all full scale, then the standards are all acceptable. If some standards are judged to depart too much from their intended value, substitute new standards.

8.2.9 Calibration without a voltage divider.

8.2.9.1 For apparatus not fitted with a voltage divider, or fitted with a voltage divider that does not provide all the ranges corresponding to each calibration standard, proceed as follows:

8.2.9.2 Decrease the amplifier gain control to the minimum setting and insert the MR 6 standard, adjusting its position to produce maximum galvanometer deflection.

8.2.9.3 Raise the amplifier gain control until full scale deflection results.

8.2.9.4 Remove the MR 6 standard and insert each of the other standards and note their maximum deflections. These deflections should be 1/12, 1/6 and 1/2 respectively for MR 0.5, 1, and 3 standards.

8.2.9.5 Plot galvanometer readings as a function of the nominal MR for each standard. If a straight line is obtained, the system response is linear. Otherwise, the graph may be used to interpret galvanometer readings.

8.2.9.6 If individual standards depart significantly from their proportional galvanometer deflections, substitute new standards.

8.2.9.7 If the system response is nonlinear, but constant, then an appropriate nonlinear galvanometer scale may be substituted for the linear scale to dispense with the use of the calibration graph.

9. Procedure

9.1 Insert a specimen into a holder by means of a wide-mouthed funnel, in several pinches, and pack each pinch into place. Each pinch must include a complete cross section of the specimen and must not be sprinkled into the funnel. Refer to 7.3 for non-fibre specimens. If the density of the specimen is too great to fill the volume, disperse in zinc oxide, or other inert material.

9.2 Set the analyzer to give full scale deflection with an MR 6 standard and insert the test specimen holder adjusting its position to produce maximum response.

9.3 Note the galvanometer reading.

9.4 If a voltage divider is fitted, and if the galvanometer reading is less than half scale, then switch the divider to the appropriate scale, calibrate with the corresponding standard, and determine the MR of the test specimen under these conditions.

9.5 Repeat the above procedure on the other four specimens.

10. Calculation

10.1 Multiply the galvanometer reading by the value of the standard used to set full-scale deflection of the galvanometer, and divide this product by the maximum scale value to obtain the magnetic rating of the specimen.

10.2 Example: Full-scale deflection was set with the MR 3 standard. The scale is calibrated from 0 to 100. The reading on the specimen was 62. The magnetic rating is calculated as follows;

$$MR = 3 \times 62/100 = 1.86$$

11. Report

11.1 Report the average of five determinations.

11.2 Fully identify the sample as to designation and origin.

12. Precision and Accuracy[7]

12.1 Precision.

12.1.1 Single-apparatus, single-operator.

12.1.1.1 The single-laboratory, single-operator coefficient of variation is of the order of ± 3 percent from the average.

12.1.1.2 The critical difference between two averages of observed values beyond which they should be considered significantly different at the 95 percent probability level is of the order of 8.5 percent on the average.

12.1.2 Multi-laboratory, multi-operator.

12.1.2.1 The multi-laboratory, multi-operator coefficient of variation is of the order of ± 5 percent from the average.

12.1.2.2 Two averages of observed values should be considered significantly different at the 95 percent probability level if their difference is of the order of 14 percent from the average.

12.2 Accuracy.

12.2.1 No justifiable statement on the accuracy of this method for magnetic rating can be made since the true value of the property cannot be established by an acceptable reference method.

ANNEX

A1. ABSTRACT FROM ASTM METHOD D 1118-57 FOR MAGNETIC RATING OF ASBESTOS[8]

A1.1 Principle of operation of apparatus.

A1.1.1 A schematic drawing of the apparatus for Procedure A is shown in Figure 1. The apparatus consists of a testing solenoid T having a primary winding M to produce a strong magnetic field, and secondary windings S and B to measure the change of flux caused by the specimen, a Class A audio amplifier, A, to increase the signal sufficiently to operate an indicating instrument I. This apparatus operates from a 115-V, 60-Hz ac power supply. The secondary winding S is wound in two equal sections and connected so that their voltages oppose each other when the primary winding M is energized. Coil B is used in series with S to balance out any small voltage difference between the two sections, so that the voltage to the amplifier is zero when no specimen is in the coil. Under this condition, a small amount of magnetic material in one section of S will cause a small voltage at the input to the amplifier due to the increased magnetic flux in that section. This voltage is amplified sufficiently by A to be read by instrument I. It has been found that the readings of I are nearly directly proportional to the magnetic rating up to a magnetic rating of six. The primary and secondary windings of the testing solenoid, the amplifier gain, and the indicating instrument sensitivity can be varied as long as the over-all amplification is sufficient to give a full-scale deflection for the standard corresponding to the maximum scale value.

A1.2 Testing Solenoid.

A1.2.1 The testing solenoid shall have a primary winding of 17 layers of 1.45 mm (0.057 in.) enameled single cotton covered copper wire (approximately 4200 turns). This coil shall be wound on a compound tube 57.15 mm (2.25 in.) in outside diameter with an inside diameter of 50.8 mm (2 in.), a length of 457 mm (18 in.), and end flanges 130 mm (5 in.) square by 25 mm (1 in.) in thickness. Inside of and concentric with the primary winding is the main secondary winding. This winding shall be in two sections on a compound tube 50.8 mm (2 in.) in outside diameter with an inside diameter of 25 mm (1 in.) and a length of 457 mm (18 in.) having two winding spaces each 76.2 mm (3 in.) in length with a diameter of 38.1 mm (1.5 in.) located an equal distance from the ends of the tube and 28.67 mm (1.125 in.) apart. Each section shall be

wound with one layer of 0.254 mm (0.010 in.) enameled single silk covered copper wire (approximately 220 turns). These coils shall be electrically connected so that their voltages are opposing each other. A small sliding coil, B, Figure 1, shall be connected in series with the secondary winding and is used for fine adjustment of the secondary voltage. This coil shall be made to slide in the end of the secondary winding coil form with provision to lock it in place at any position up to 50 mm (2 in.) inside the form. The winding space for the sliding coil shall be 25 mm (1 in.) outside diameter with an inside diameter of 22 mm (0.875 in.) and a length of 6 mm (0.25 in.). The number of turns on this coil is determined during test as follows: Energize the primary coil from a 115-V, 60 Hz ac source and measure the voltages across the secondary coils. Then connect these coils in series so that their combined voltage is near zero. Then using a more sensitive indicating instrument, remove turns from the stronger section one turn at a time until it is within one turn of being exactly equal to the other section. Then wind the sliding coil with a sufficient number of turns so that the sections are exactly balanced at some point within its limits of motion and unbalanced in opposite directions at the extreme positions the sliding coil can take. This final balancing is usually made with the complete analyzer apparatus and the proper balance is indicated when the indicating instrument will show an appreciable deflection with the balance coil at one extreme of its limits of motion and then decrease to approximately zero and then increase to an approximately equal unbalance as the coil is moved to its other extreme limit.

A1.3 Test specimen holder.

A1.3.1 Test specimens shall be placed in a holder to facilitate setting them in and removing them from the testing solenoid. This specimen holder shall be slightly less than 25 mm (1 in.) in diameter so that it will easily slide inside the secondary coil. It shall be made with a handle at one end and a cork at the other end leaving a space 19 mm (0.75 in.) in diameter by 73 mm (2.875 in.) in length for the test specimen. The handle shall be made with a stop and its length shall be such that the specimen holder is centrally located under the nearest section of the secondary winding when the stop is against the solenoid.

A1.4 Amplifier.

A1.4.1 The amplifier[6] shall be a two-stage resistance-coupled Class A amplifier, using a pentode (type 57) for the first stage and a triode (type 56) for the second stage. The input is transformer coupled with a high secondary-to-primary-turn ratio transformer. The secondary of the input transformer is shunted by a resistance to change from the high sensitivity scale to the low sensitivity scale. This shunt circuit is controlled by a switch mounted on the amplifier panel. The amplifier gain is controlled by varying the screen grid voltage of the type 57 tube with the potentiometer G, Figure 1. The indicating instrument I, included in the amplifier, is a d-c milliampere meter with a

sensitivity of 1 ma for a full scale deflection. This instrument is used with a copper oxide instrument rectifier for use on alternating current. It is coupled to a 30-henry choke in the output of the type 56 tube by means of two 2-µf capacitors.

ST0720739

FOOTNOTES

1. Supersedes designation G-6 of the 1966 second edition. Dates of adoption or latest revision: Asbestos Textile Institute, adopted 11 Feb 1965, latest editorial revision 28 Feb 1974; Quebec Asbestos Mining Association, adopted 15 Mar 1973, latest editorial revision 14 Mar 1974.

2. Appears in the Chrysotile Asbestos Test Manual, third edition, available from Quebec Asbestos Mining Association, 580 Grande Allée East, Suite 320, Quebec, P.Q., Canada, G1R 2K2.

3. Refer also to ASTM Method D 1118 for Magnetic Rating of Asbestos Fiber and Textile Products, Annual Book of ASTM Standards, Part 33.

4. Annual Book of ASTM Standards, Part 33.

5. Current calibration magnetite samples referenced to NBS sample 29 (a) are available from the Executive Secretary of the Asbestos Textile Institute, Box 239 Pompton Lakes, N.J. 07442, U.S.A.

6. The Class A amplifier manufactured by David Bogen Co. Inc., New York 14, N.Y., U.S.A., has been found satisfactory for this purpose. An amplifier with similar characteristics of a more recent design may be used to advantage.

7. Based upon values determined for Method G-9 that were found to have equivalent precision[2].

8. Permission for reproduction obtained from American Society for Testing and Materials and Committee D-13 on Textile Materials.

ST0720740

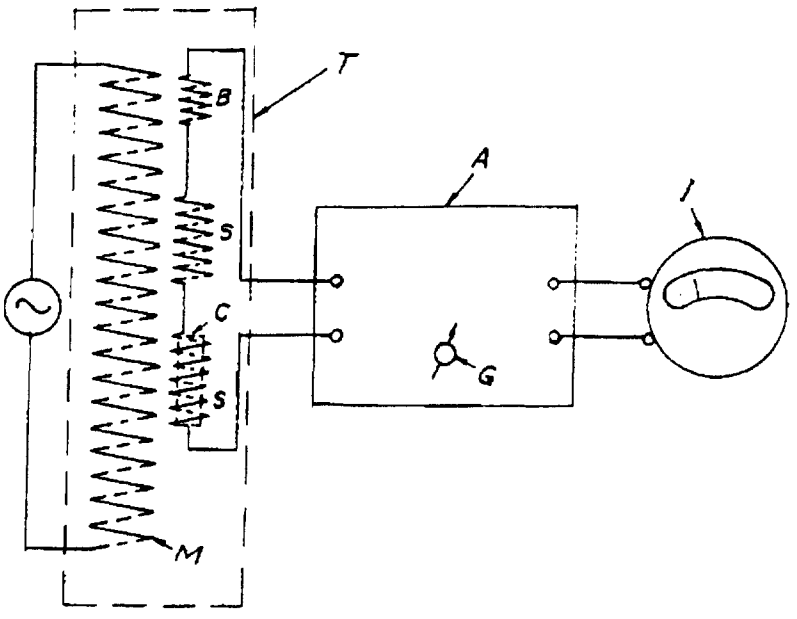

LEGEND

A - Amplifier
B - Balancing coil
C - Test Specimen
G - Amplifier gain control
I - Indicating galvanometer
M - Magnetizing coil
S - Secondary coils
  - Alternating current source
T - Test solenoid

Fig.1— Schematic Diagram of the Mapes Analyser

G-10/13

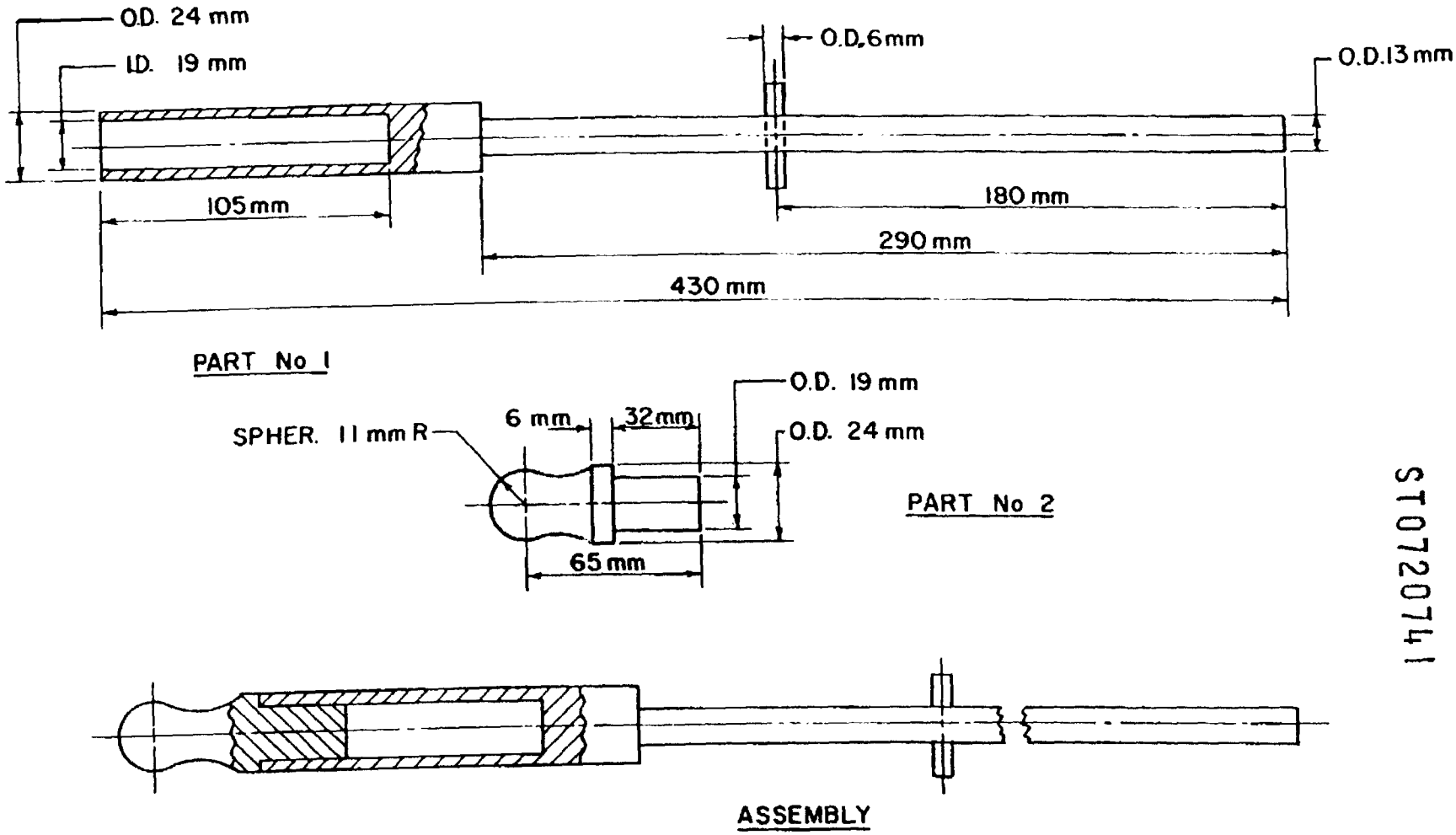

ST0720741

G-10/14

Fig.2– Specimen Holder