Harnischfeger

P&H®

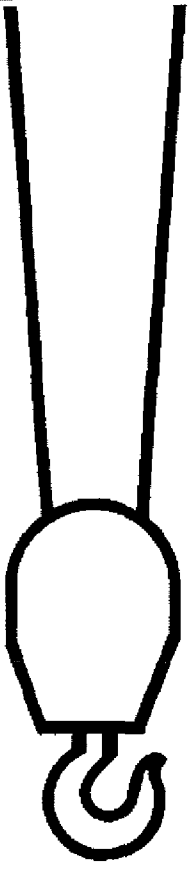

OVERHEAD CRANES

INSTRUCTION MANUAL

BULLETIN C-7-3

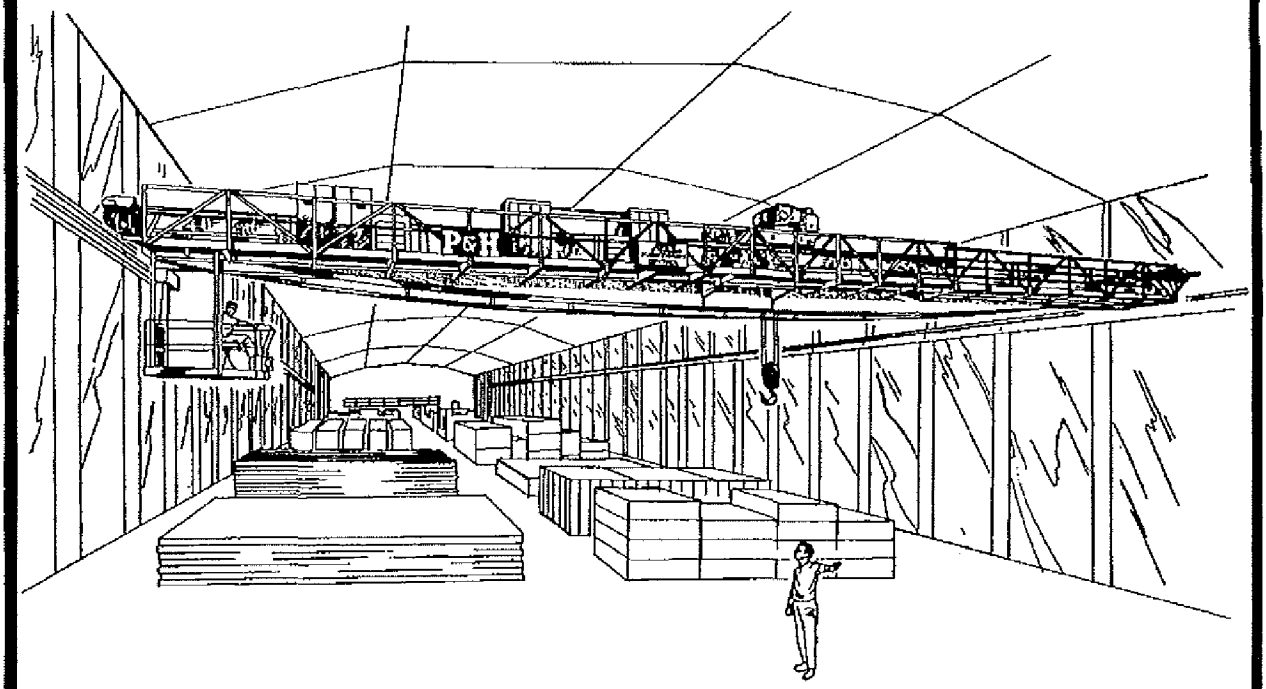

Harnischfeger

P&H

milwaukee, wisconsin 53246

BULLETIN C-7-3
REVISED 11/79

Toth 00590

TABLE OF CONTENTS

SECTION NUMBER	SECTION TITLE	PAGE
I	DESCRIPTION	1-1
	General	1-1
	Description of Operation	1-1
	Purchased Components	1-1
	Safety	1-1
	Warranty	1-2
	Terminology	1-2
II	INSTALLATION	2-1
	General	2-1
	Match-Marking	2-1
	Runway	2-2
	Mainline Conductors	2-5
	Erection	2-5
	Initial Lubrication	2-5
	Installation Testing	2-5
	Reeving	2-7
III	SAFE PRACTICES	3-1
	General	3-1
	Safety Instructions	3-1
	Hand Signals	3-3
IV	LUBRICATION	4-1
	General	4-1
	Lubricant Specifications	4-2
	Wire Rope Lubrication	4-6
	Electric Motors	4-7
	Centralized Lubrication Systems	4-12
	Collector Lubrication	4-12

Toth 00591

SECTION NUMBER	SECTION TITLE	PAGE
V	CONTROL SYSTEMS	5-1
	General	5-1
	Protective Panels	5-1
	General	5-1
	Magnetic Overload Relays	5-2
	AC Magnetic Control	5-4
	Description	5-4
	Adjustment	5-7
	DC Magnetic Control	5-8
	Description	5-8
	Adjustment	5-9
	MAGNETORQUE® Control	5-10
	Description	5-10
	Adjustment	5-11
	Control Components	5-13
	Contactors	5-13
	Interlocks	5-17
	Resistors	5-18
	Controllers	5-19
	Joy Stick Control Unit	5-22
VI	BRIDGE DRIVE SYSTEM	6-1
	Introduction	6-1
	Electric Motors	6-1
	Motor Brakes	6-7
	Couplings	6-7
	MAGNETORQUE®	6-8
	Gear Case	6-8
	Bridge Drive Wheels	6-8
	Collectors and Conductors	6-9
VII	TROLLEY DRIVE SYSTEM	7-1
	Description	7-1
	Electric Motor	7-2
	Motor Brakes	7-2
	Couplings	7-2
	MAGNETORQUE®	7-2
	Gear Case	7-2
	Collectors and Conductors	7-2
	Trolley Drive Wheels	7-3
VIII	HOIST SYSTEM	8-1
	General	8-1
	Electric Motor	8-2
	Motor Brakes	8-2
	Couplings	8-2
	MAGNETORQUE®	8-2
	Gear Case and Load Brake	8-2
	Gear Case	8-2
	Load Brake	8-2
	Hoist Limit Switches	8-4
	Maintenance of Wire Rope	8-7
	Cable Replacement	8-9
	Inspection and Maintenance of Bottom Block Assemblies.	8-14
	Magnet Cable Reels	8-14

Toth 00592

SECTION NUMBER	SECTION TITLE	PAGE
IX	MOTOR BRAKES	9-1
	Introduction	9-1
	Electric Brakes	9-1
	Shoe Brake	9-1
	Disc Brake	9-3
	Hydraulic Brakes	9-4
	Shoe Brake	9-4
	Disc Brake	9-4
	Electric-Hydraulic Brakes	9-6
	Shoe Brake	9-6
	Disc Brake	9-6
	Hydraulic System	9-7
	General Maintenance	9-7
	Bleeding	9-8
	Draining and Flushing	9-9
	Refilling	9-9
	Hydraulic System Components	9-10
	General	9-10
	Master Cylinders	9-10
	Wheel Cylinders	9-12
	Crossover Valve	9-13
	Brake Rectifiers	9-13
	Introduction	9-13
	Brake Rectifier Maintenance	9-13
X	GENERAL MAINTENANCE	10-1
	General Disassembly Instructions	10-1
	General Inspection and Repair Instructions	10-1
	General Reassembly Instructions	10-2
	Preventive Maintenance	10-4

Toth 00593

SECTION I
DESCRIPTION

GENERAL

This manual describes the operation, adjustment, lubrication, and general maintenance necessary for the safe and efficient operation of electric overhead cranes.

Because this manual will describe a large number of different crane components, it will in some cases be written in general terms. When explicit information not contained in this manual is required, consult the Harnischfeger Service Department.

The maintenance of the various components will be described in five sections of this manual. They are:

1. Control Systems
2. Bridge Drive System
3. Trolley Drive System
4. Hoist System
5. Motor Brakes

A crane inspection report form has been included in the rear of this manual to aid in establishing a preventive maintenance program. Written, dated and signed inspection reports and records should be made on critical items such as crane hooks, chains, ropes and slings. Reports should be kept where readily available to appointed personnel. The inspector must be thoroughly familiar with the information contained in the latest edition of USAS B30.2.0, Safety Code for Cranes, Derricks, and Hoist, published by the American Society of Mechanical Engineers.

DESCRIPTION OF OPERATION

GENERAL. The basic components of any overhead crane are illustrated in Figure 1-1. Any overhead crane consists of three basic units, the bridge, trolley, and hoist.

BRIDGE. The bridge is the main structural member used to span the width of the runway area. It travels the length of the runway on rails fastened to the runway. The trolley travels on rails fastened on the top of the bridge girders.

TROLLEY. The trolley is a motor driven vehicle, which travels along the rails fastened to the bridge girders, and supports the hoist and trolley mechanism.

HOIST. The hoist unit is an apparatus which exerts a force for lifting or lowering. It is power driven through a gear reducer and hoist drum. The bottom block is suspended from the hoist cable reeved between the upper block sheaves on the trolley structure, the bottom block sheaves, and dead ended at the hoist drum.

PURCHASED COMPONENTS

Components which are not manufactured by P&H are not necessarily covered in this manual. Refer to the literature provided by the manufacturer of such equipment.

SAFETY

A separate section of this manual has been devoted entirely to safe operating practices. It is most important that the operator read that section and be familiar with this manual before operating the crane, both for his own protection and the protection of others.

Toth 00595

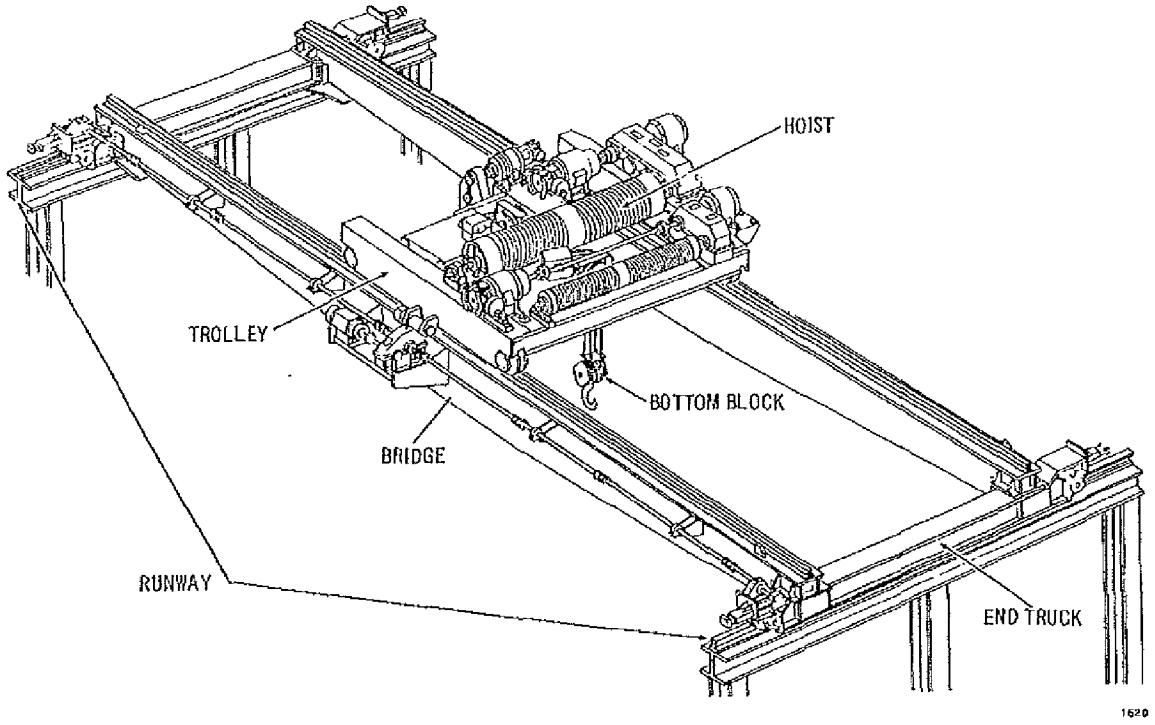

Figure 1-1. Overhead Crane

WARRANTY

The terms under which these cranes are guaranteed are clearly defined under the warranty which accompanies every P&H product. This warranty, while generous, will be voided if the crane is operated with loads in excess of the nameplate rating, under unsafe operating practices or conditions, or with accessories or attachments not designed or furnished and approved by the Harnischfeger Corporation. Modifications made on the machine which affect safe operation or capacity will void the warranty.

TERMINOLOGY

Certain terms are frequently used in this manual. For better understanding, several are defined below. See Figure 1-1.

1. BRIDGE. That part of a crane consisting of girders, end trucks, end ties, footwalks, and drive mechanism on which the trolley or trolleys operate.

2. TROLLEY. The unit which travels on the bridge girder rails and carries the hoisting and trolley travel mechanism.

3. HOIST. An apparatus which is part of the crane, exerting a force for lifting or lowering a load.

4. RUNWAY. An assembly of rails, beams, girders, brackets, and framework on which the crane or trolley travels.

5. SPAN. The horizontal distance, center to center, of the runway rails.

6. END TRUCK. The unit consisting of a frame, wheels, bearings, and axles which support the bridge girders or trolleys.

7. LOAD. The total superimposed weight on the bottom block.

8. BOTTOM BLOCK. The assembly of hook, bearing, sheaves, pins, swivel, and frame suspended by the hoisting ropes.

9. COUNTERTORQUE. A method of control by which the power to the motor is reversed to develop torque in the opposite direction.

10. DYNAMIC. A method of controlling crane motor speed when in the overhauling condition to provide a retarding force.

11. REGENERATIVE. A form of dynamic braking in which the electrical energy is fed back into the power system.

The definitions in this section have been taken, in part, from the Safety Code for Cranes, Derricks, and Hoists (USAS B30.2.0 - 1967).

Toth 00596

SECTION II
INSTALLATION

GENERAL

Prior to erecting the crane, the building dimensions must be verified. The measurements must correspond with those shown on the certified clearance drawing and the crane must be erected with the same relationship to the building as shown on the drawing.

It is recommended that the crane be inspected by a qualified P&H Service Department Representative prior to the initial operation of the crane.

MATCH-MARKING

Upon completion of shop testing, the crane is match-marked and disassembled for shipment. Figure 2-1 illustrates an example of match-marking. The right front corner is designated as corner No. 1 and the numbers continue around the crane clockwise in sequence to the right rear corner, which is designated as corner No. 4.

A match-mark number is stenciled on the crane and/or every part removed from the crane at the

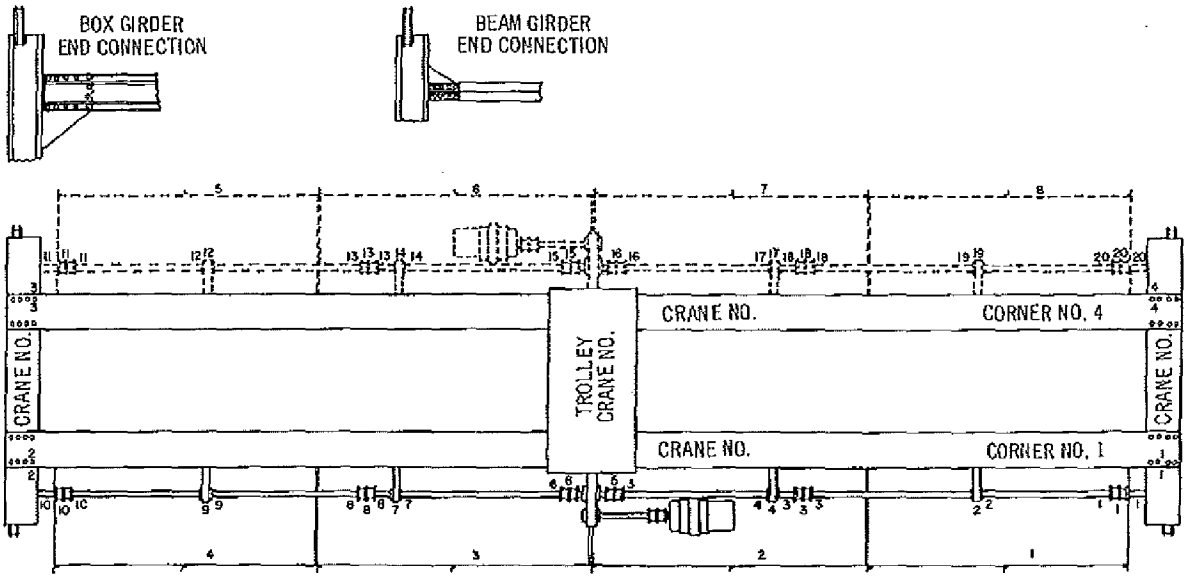

Figure 2-1. Crane Match-Marking

1621

Toth 00597

point of disassembly. When two or more cranes of the same type are shipped to the same job site, each crane is color coded in addition to match-marking. All electrical terminals and wires are tagged to insure proper reconnection.

When match-marking is completed, the crane is disassembled to the extent required for shipment. Figures 2-2 through 2-4 illustrate the extent to which typical cranes are disassembled for shipment.

RUNWAY

GENERAL. For proper operation of a P&H crane, an adequate and properly aligned supporting structure must be provided. The runway dimensions must be verified with the certified clearance drawing.

RAIL INSTALLATION. The runway rail adjacent to the mainline power conductors must be installed

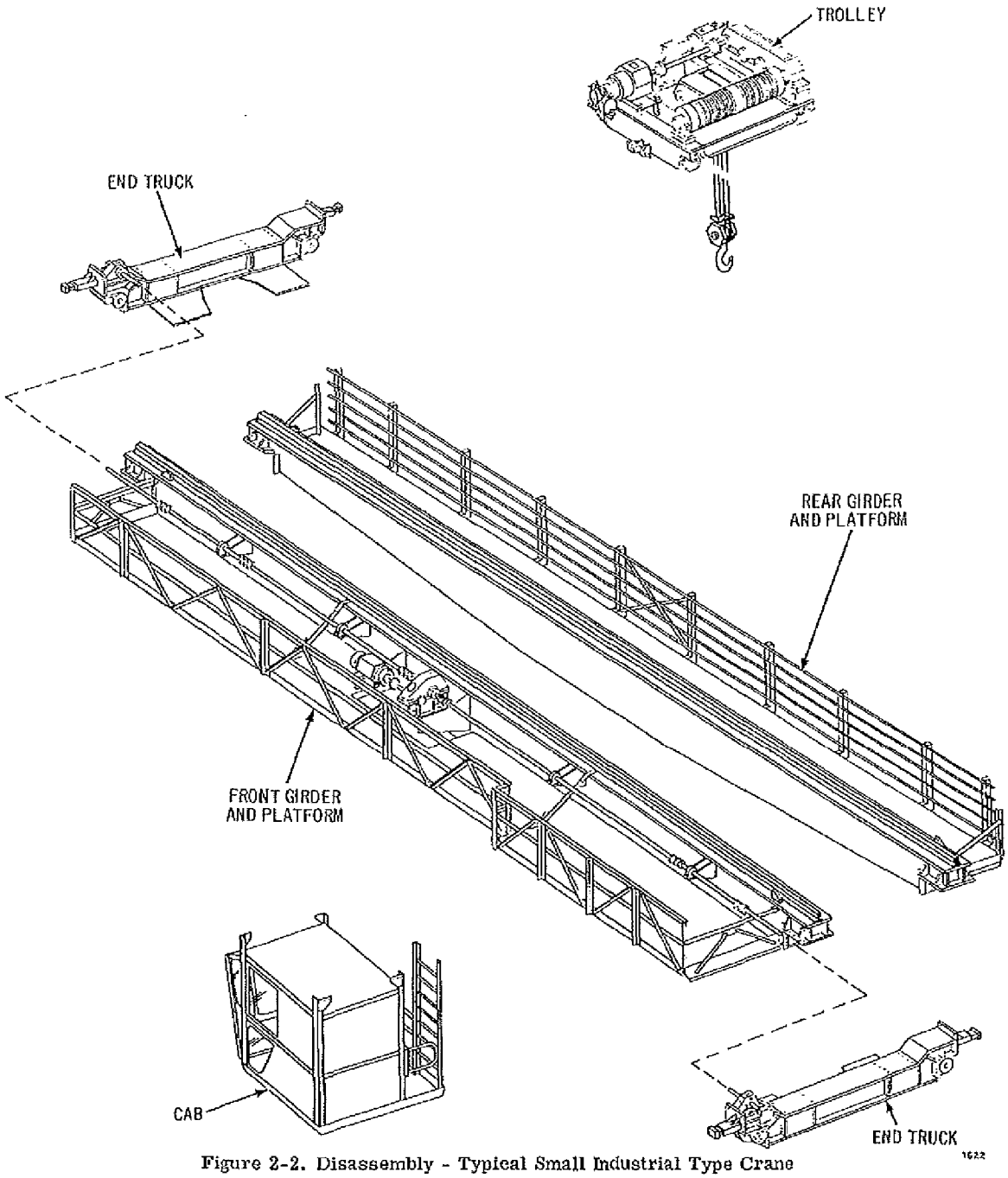

Figure 2-2. Disassembly - Typical Small Industrial Type Crane

Toth 00598

first. The following procedure should be used when installing runway rails.

1. Align the rail sections on the center of the runway beam with a transit. On very short runways a chalk line can be used to align the rails.

2. Bolt or weld the rail section together. The rail joints must be tight and at the same elevation to provide a smooth running surface. For recommended welding procedures, consult the Harnischfeger Service Department.

3. Fasten the rail to the runway beam.

4. Install the opposite runway rail in the same manner as described in steps 1, 2, and 3. The distance between the runway rails must be within ±1/8 inch, center to center, in a straight line along the entire length of the runway. The runway elevation must be equal and level within ±1/4 inch in a straight line along the entire length of the runway, as determined by transit measurements.

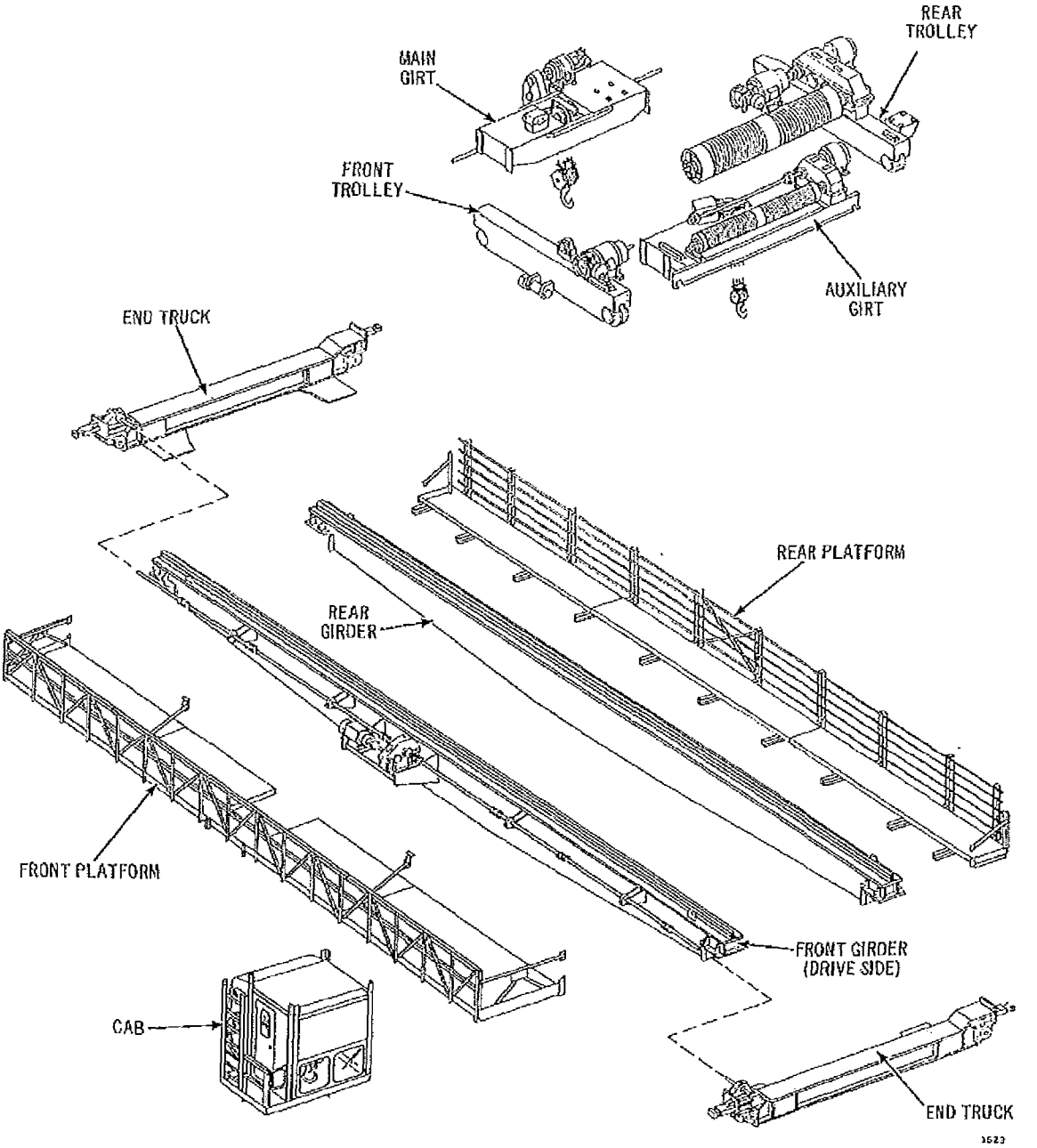

Figure 2-3. Disassembly - Typical Large Industrial Type Crane

Toth 00599

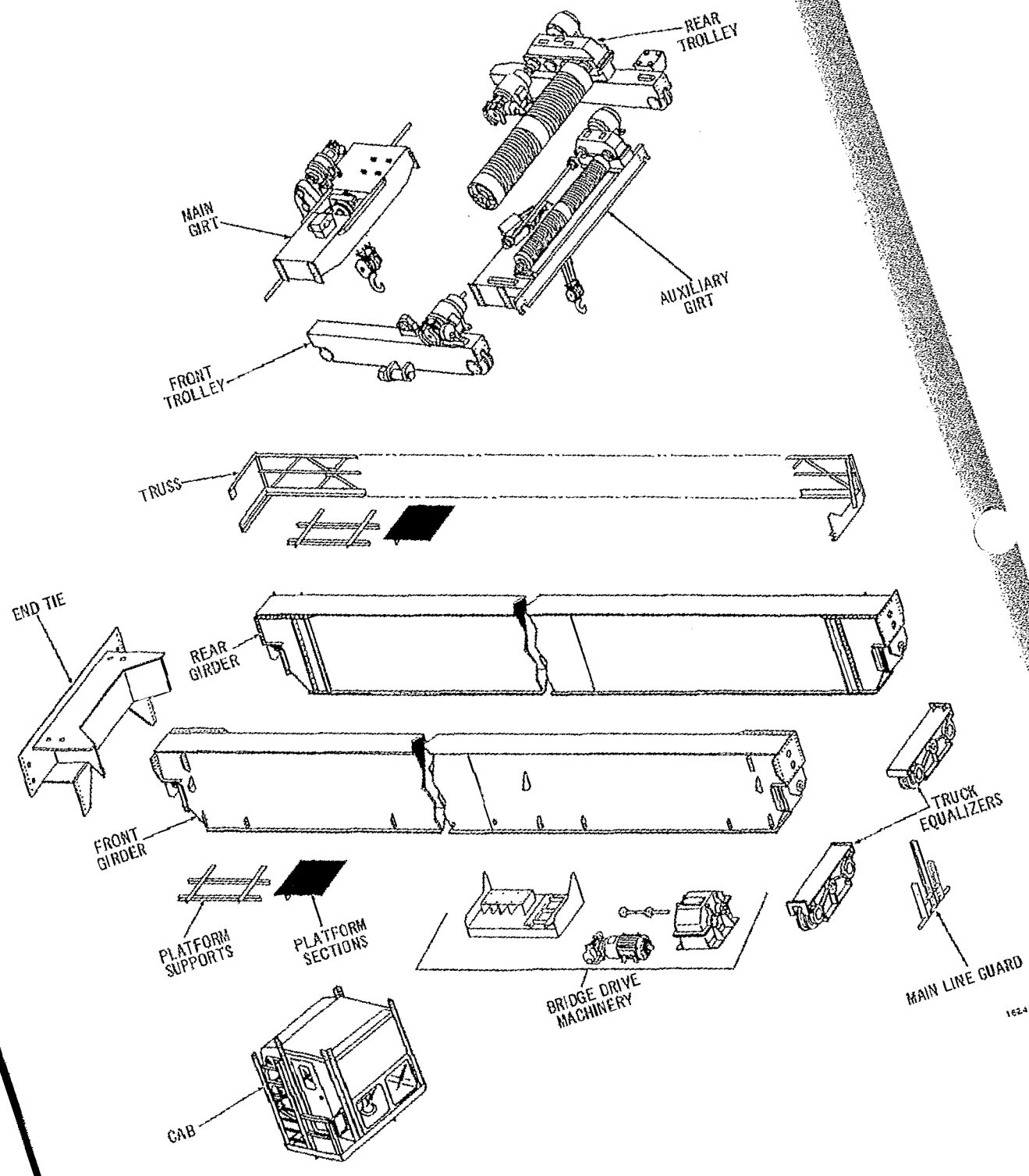

Figure 2-4. Disassembly - Typical Mill Type Crane

Toth 00600

MAINLINE CONDUCTORS

The mainline conductors are current carrying conductors used to provide electrical power to the crane as it moves along the runway.

The horizontal and vertical alignment of the conductors must be straight and true. The alignment must be made with respect to the runway rail and NOT the runway beam.

ERECTION

GENERAL. The crane must be assembled and installed in accordance with the erection drawings furnished and the match-marks on the crane. The crane must be erected with the same relationship to the building as shown in the drawings.

BRIDGE. The bridge girders are fastened to the end truck or end ties with body bound bolts to maintain the "built-in" squareness of the crane. These bolts have machined shanks, which are closely fitted into precision reamed holes. If it is necessary to align the holes in the girder with the holes in the end truck or end tie, use a size-on-size barrel pin.

CAUTION

DO NOT USE tapered drift pins, since these will offset the advantage gained by using body bound bolts.

TROLLEY. Position the trolley on the bridge as shown on the erection drawings.

COUPLINGS. When the crane is disassembled for shipment, some of the compression couplings may have been slid back from the end of the shaft for temporary storage during shipment. Refer to the erection drawings for the correct placement of the couplings and refer to SECTION VI, BRIDGE DRIVE SYSTEMS for the correct installation procedure.

OPERATOR'S CAB. Attach the operator's cab to the crane structure.

ELECTRICAL CONNECTIONS. The operator's cab is completely wired at the factory. All external conduits from the cab are fitted and removed for shipping. Electrical equipment that has been removed for shipping is marked with identification tags to assist in reconnection.

Complete wiring diagrams are furnished with the crane and must be used to assure proper connection of the electrical equipment.

HYDRAULIC CONNECTIONS. If hydraulic brakes are used, a line is installed from the master cylinder to the top of the operator's cab. A sufficient amount of tubing is furnished to make the connections from the cab to the wheel cylinder and reservoir. After the cab has been installed, complete the hydraulic connection. The tubing must rise slightly from the cab to the brake to prevent air from being trapped in the hydraulic line. Before operating the brake, it is necessary to:

1. Fill the master cylinder or reservoir, with hydraulic brake fluid of the required type.

2. Bleed the system.

3. Adjust the brake as required.

Refer to SECTION IX, MOTOR BRAKES for proper bleeding and adjustment procedures.

INITIAL LUBRICATION

The crane is lubricated at the factory prior to shipping. However, all grease fittings must be relubricated before operating the crane, and all gear case oil levels must be checked.

INSTALLATION TESTING

GENERAL. The following tests must be done under three different conditions. They are:

1. Preliminary test
2. No-load test
3. Load test

Prior to reeving the bottom block and applying power to the crane, check the following:

1. The material in this manual must be read and thoroughly understood, especially those portions concerning proper assembly, alignment and adjustments.

2. Main line disconnect switch is in the OPEN position.

3. Runway rail alignment for parallelism in span and vertical and horizontal line-up.

4. All lockwashers are in place and bolts are in proper location (especially bridge end ties) and securely fastened.

5. Electrical connections for good contact and conformance with wiring diagram.

6. Overload relays are properly adjusted and where required dash pots filled to proper oil level.

7. Bridge conductor system for line-up with top and centerline of bridge rail.

8. Bridge collector staff for secureness, collector line-up and contact with conductor system.

9. Runway conductor system for line-up with top and centerline of runway rail.

Toth 00601

10. Runway collector staff for secureness, collector line-up and contact with conductor system.

11. All brakes (electric and hydraulic) for adjustment, tight hydraulic line connections and bleeding of system.

12. Limit switch manually for free operation.

13. All lubrication and oil levels for sufficient lubricant.

14. All guards are in place and securely fastened, coupling, bridge and trolley rail guards, etc.

15. Power supply in conformance with crane specification as ordered.

PRE-TEST PRECAUTIONS. The main line disconnect switch on the crane shall remain open. Before starting the tests remove all loose objects which could fall and cause injury to personnel or damage to equipment. Open all power and control circuit master switches on each motion control panel. Place all controllers in the neutral or OFF position.

PRELIMINARY TEST. The preliminary test is done without the bottom block reeved. Test the hoist motion as follows:

1. Close main line disconnect switch on the crane.

2. Close control circuit switch on hoist control panel.

NOTE

The plugging and accelerating relays on an AC powered crane must be blocked so that the normally open contacts are closed in order to check contactor sequence.

3. Operate hoist controller in both directions and observe that control panel components function in agreement with wiring diagram sequence.

4. Return controller to neutral position and close main power switch on hoist control panel.

5. Operate hoist controller in both directions for a period of time just sufficient to observe and verify that motion occurs, that direction of rotation is correct and speed control is available. If direction of rotation is reversed, reverse in accordance with the instructions in SECTION VI, BRIDGE DRIVE SYSTEMS.

Test the trolley motion as follows:

CAUTION

When propelling the trolley or bridge, watch for interference along the travel distance including overhead obstructions.

1. Close control circuit switch on trolley control panel.

2. Operate trolley controller in both directions and observe that control panel components function in agreement with wiring diagram sequence.

3. Return controller to neutral position and close the power switch on trolley control panel.

4. Operate trolley controller in both directions for a period of time just sufficient to observe and verify that motion occurs, that direction of travel is correct and speed control is available. If direction of travel is reversed, reverse motor rotation in accordance with the instructions in SECTION VI, BRIDGE DRIVE SYSTEMS.

5. Open control circuit switch on trolley control panel.

The procedure for testing the bridge motion is the same as described above for the trolley motion.

NO-LOAD TEST. Before proceeding with the no-load test, reeve the bottom block in accordance with the reeving diagram furnished with the crane erection drawings. Figures 2-6 through 2-16 illustrate typical reeving arrangements used on P&H overhead cranes.

Test the hoist motion as follows:

1. Close the main power and control circuit switches on the hoist control panel.

2. Raise the bottom block to a point approximately two feet from the limit switch reset counterweight and stop the bottom block.

3. Test the hoist limit switch for proper operation as follows:

A. Check to see that the hoist limit switch reset counterweight is at the bottom of its travel and is free to move.

B. Using extreme care, slowly "inch" the bottom block into contact with the limit switch reset counterweight.

C. Again using extreme care, inch the bottom block upward a distance not to exceed 4 inches for the Type DB limit switch, or 8 inches for the Type HB limit switch. The limit switch must open somewhere within these tolerances.

D. If the limit switch fails to stop the bottom block within these tolerances after making contact with the limit switch reset counterweight, check the wiring diagram for the possible cause. Find and correct the defect.

Toth 00602

WARNING

Open the main power supply knife switch and lock it in the open position before examining the components of the limit switch circuit.

4. Repeat operations 1 through 3 until the malfunctioning is corrected and positive limit switch operation is obtained.

5. Check the upper and lower limits of travel when a geared limit switch is used. The lower limit should be set so that the LOWER circuit is opened when two wraps of wire rope remain on the drum. The upper limit should be set so that the RAISE circuit is opened when the bottom block reaches the upper limit of the lift dimension shown on the certified clearance drawing. The procedure for adjusting the geared limit switch is described in SECTION VIII.

WARNING

Sufficient clearance must be allowed to provide for a few inches of drift after the RAISE circuit is opened by the limit switch.

6. Operate the hoist several times, raising and lowering the bottom block, and observe speed control, motor brake, and limit switch operation.

7. Check all other hoist safety devices for proper and safe operation.

Test the trolley motion as follows:

CAUTION

When propelling the trolley or bridge, watch for obstructions, including overhead obstructions, and be prepared to stop short of them.

1. Operate the trolley across the full length of the bridge in both directions several times, observing speed control and motor brake operation.

2. Check all other trolley safety devices for proper and safe operation.

The procedure for testing the bridge motion is the same as described above for the trolley motion.

LOAD TEST. Prior to initial use, all new cranes must be tested by or under the direction of an appointed or authorized person and a written report must be furnished by such person(s), confirming that the crane is capable of handling rated load. The rated load should not be more than 80 per cent of the maximum load sustained during the test. The test loads shall not be more than 125 per cent of the crane rating. All load movements during the test shall be initiated, supervised by, and the responsibility of the appointed person.

The test load shall be a weighted or known load, as near as possible to 125 per cent of crane rating, but not exceeding 125 per cent of rating.

The procedure for the load test is as follows:

1. Have an experienced, competent crane operator at the control when conducting the load test.

2. See that the master switches and/or controllers for all motions are in the neutral position.

3. Close the main power and control circuit switches on the crane for all motions.

4. Hitch the test load to the bottom block.

5. Before lifting the load, the hook must be brought over the load for a straight vertical lift so the load will not swing when lifted.

6. The appointed person directing the lift shall see that the load is well secured and properly balanced in the sling or lifting device, and that the crane is operating in a clear, unobstructed area.

7. Raise the load a few inches and stop the motion to check the stopping and holding ability of the hoist brakes.

8. Check the operation of all motions, and observe the operation of the limit switch(es), control system, brakes, etc.

REEVING

Figures 2-6 through 2-18 illustrate typical, double-reeving arrangements used on overhead cranes. Other reeving arrangements can also be achieved, by following the general patterns shown in Figures 2-6 through 2-18. For special applications, reeving information should be obtained from the Harnischfeger Sales or Service Office in your area.

NOTE

Single-reeving may be used on some light-duty cranes. If 2 or 4 part single-reeving is specified, it may be necessary to put 2 to 4 reverse twists in the wire rope to keep the bottom block straight.

Figure 2-5 illustrates the correct method of attaching the wire rope end to the hoist drum.

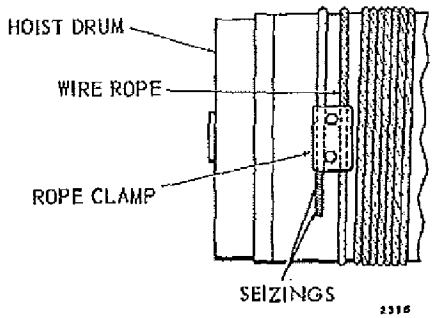

Figure 2-5. Attaching Wire Rope to Drum

Toth 00603

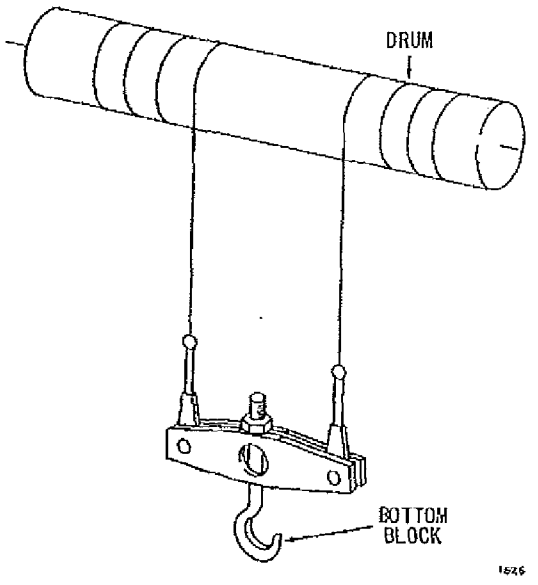

Figure 2-6. Direct Lift Reeving

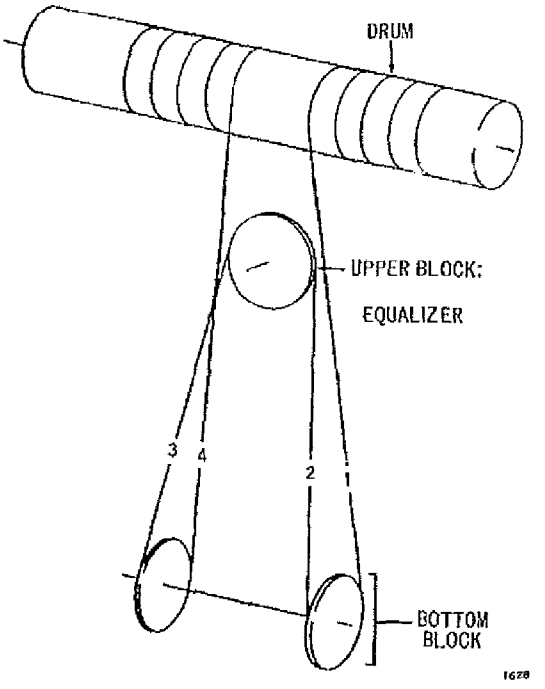

Figure 2-8. 4 Part Conventional Reeving

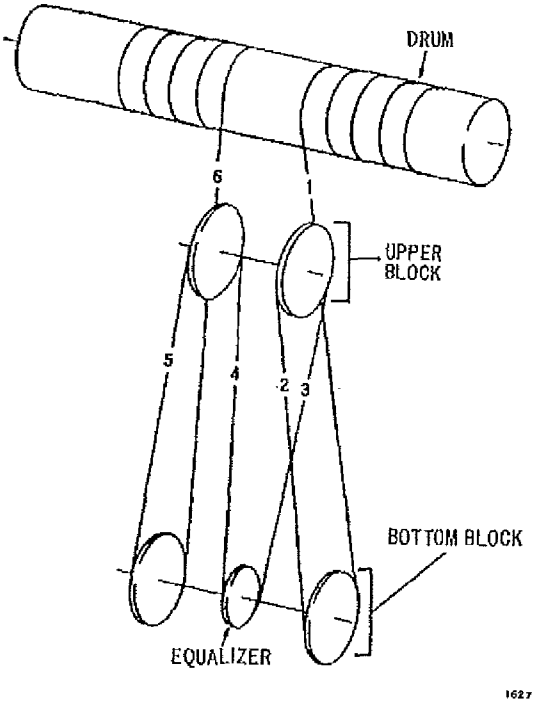

Figure 2-7. 6 Part Cross Reeving

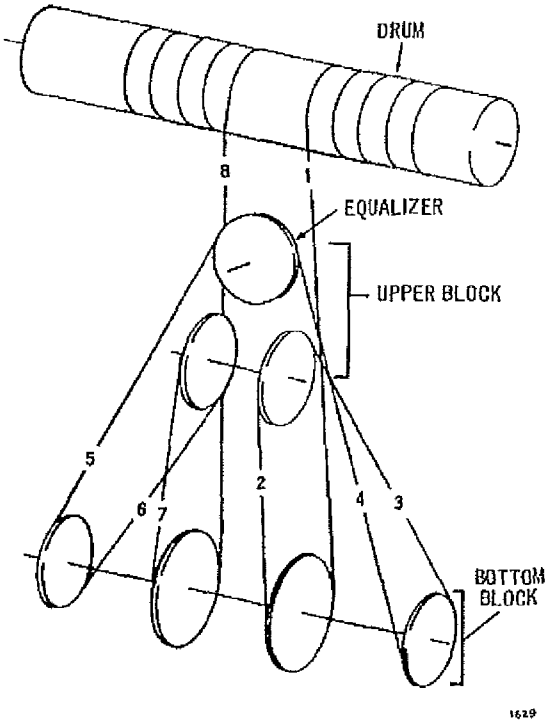

Figure 2-9. 8 Part Conventional Reeving

Toth 00604

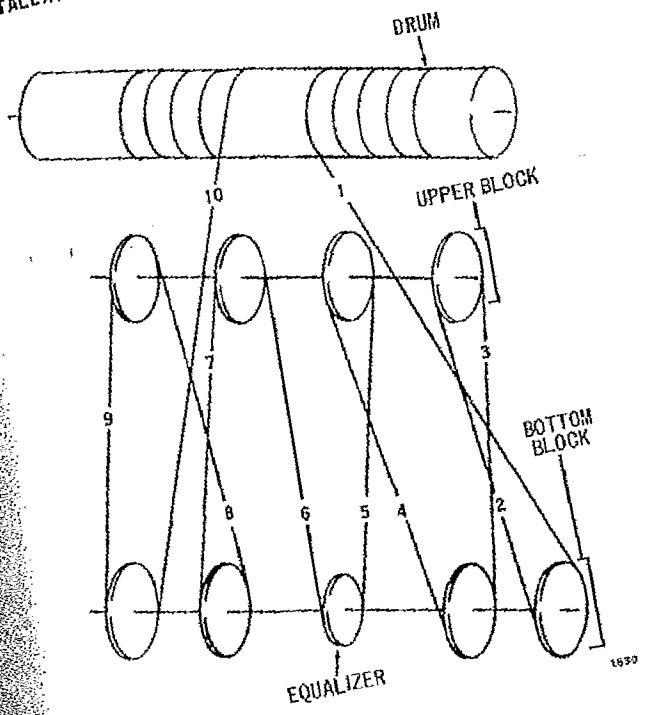

Figure 2-10. 10 Part Cross Reeving

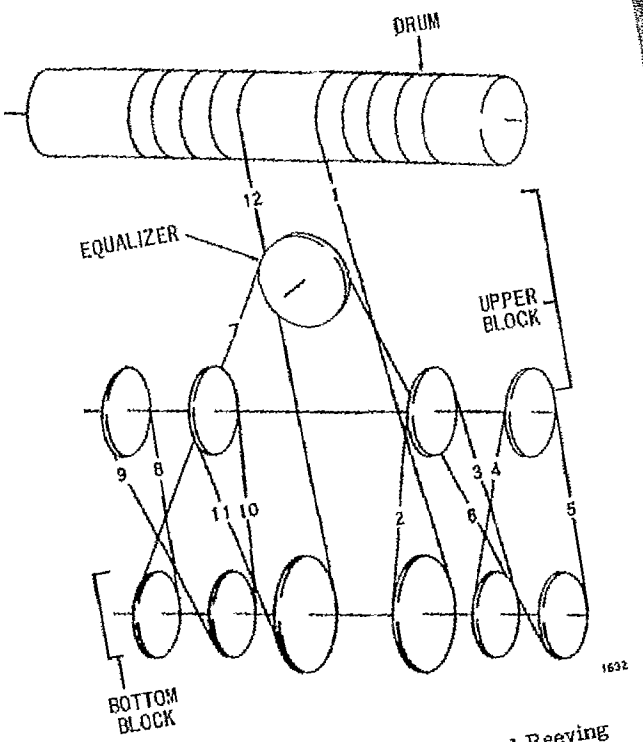

Figure 2-12. 12 Part Conventional Reeving

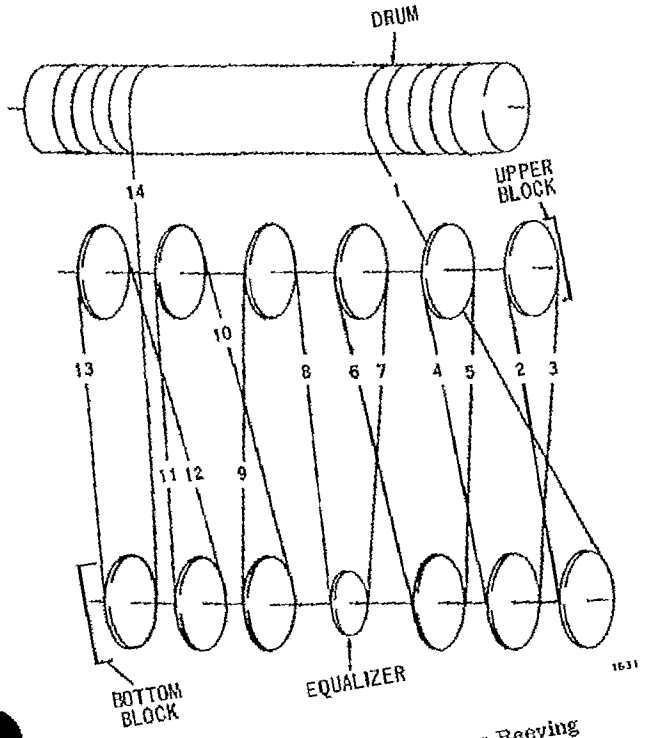

Figure 2-11. 14 Part Cross Reeving

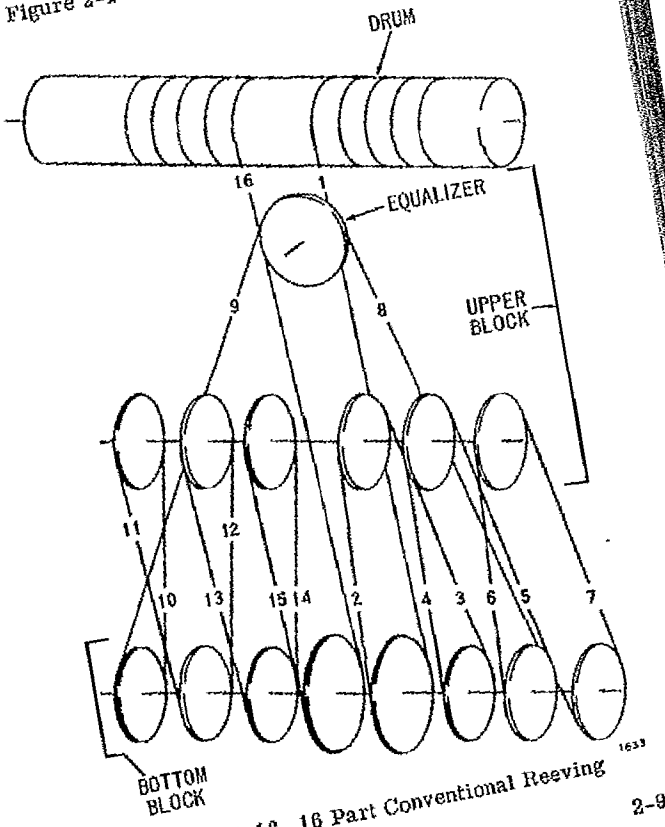

Figure 2-13. 16 Part Conventional Reeving

Toth 00605

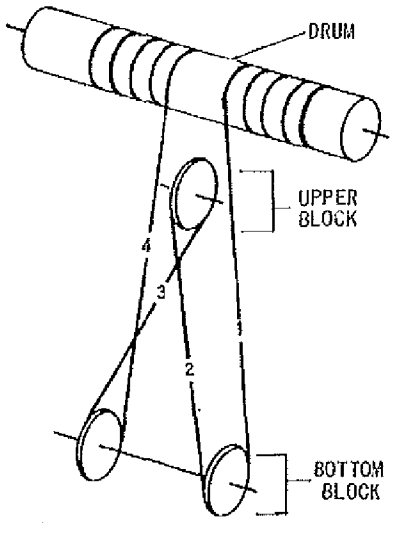

Figure 2-14. 4 Part Cross Reeving

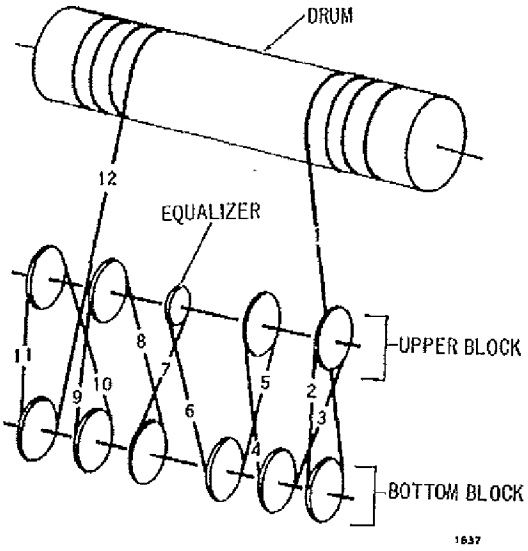

Figure 2-17. 12 Part Cross Reeving

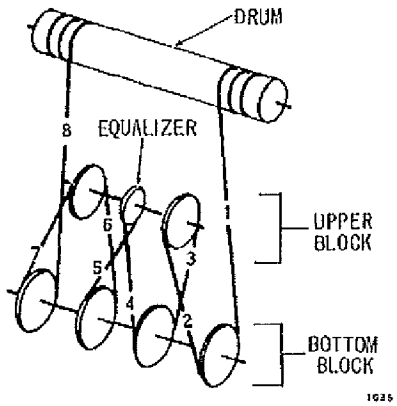

Figure 2-15. 8 Part Cross Reeving

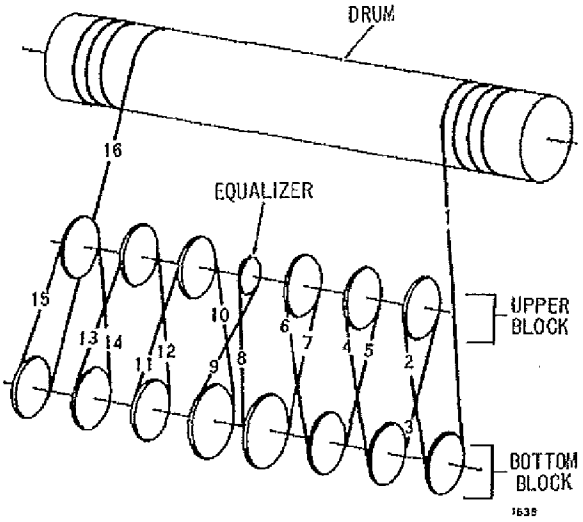

Figure 2-18. 16 Part Cross Reeving

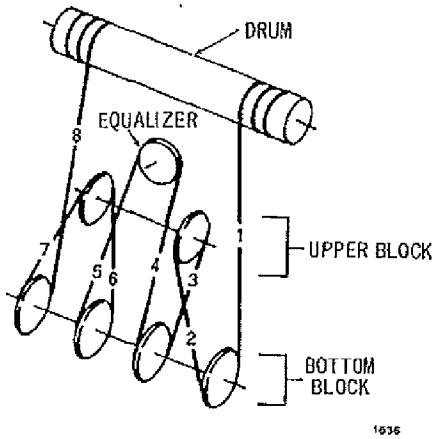

Figure 2-16. 8 Part Conventional Reeving

NOTE

For 8 part reeving when all sheaves in the bottom block are the same diameter, refer to Figure 2-16. For 8 part reeving when two inside sheaves in the bottom block are larger diameter than two outside sheaves in the bottom block, refer to Figure 2-9.

Toth 00606

SECTION III
SAFE PRACTICES

GENERAL

The use of cranes is subject to hazards that can only be met by the exercise of intelligence, care, and common sense. It is therefore essential to have competent and careful operators, physically and mentally fit, thoroughly trained for safe operation of the equipment, and the handling of loads.

All of the situations described in this section have at one time or another, contributed to unnecessary accidents. The operator of the crane is urged to carefully read this section and to avoid the hazardous operating conditions described herein. It is impossible to foresee all such conditions, and it must remain the responsibility of the operator to anticipate and avoid any unsafe conditions not covered in detail in this manual.

No machine is entirely safe unless it is properly maintained. Therefore, it becomes important to practice a program of periodic inspection and preventive maintenance. The information in this manual outlines such a program.

WARNING

Never depend on the brakes to suspend the load aloft, unless the operator is at the controls, alert, and in a position of readiness to handle the load.

SAFETY INSTRUCTIONS

1. It is assumed that personnel assigned to operate overhead and gantry cranes of the size, complexity, and cost represented by these cranes are competent and experienced in their work. It is recommended that all operators and their supervisors be familiar with the safety, inspection, and maintenance provisions of USAS B30.2.0, latest edition, published by the American Society of Mechanical Engineers at 345 East 47th Street, New York, N.Y., 10017.

2. All controls and safety devices shall be tested by the operator at the start of a shift. Any discrepancies shall be reported to the supervisor. Controls or devices not operating properly shall be adjusted, repaired, or replaced before the crane is operated. Check for the proper operation of all limit switches at the start of a shift.

WARNING

The upper limit switch is a safety device rather than an operating control and shall not be unnecessarily actuated during normal operation of the crane.

3. Check the bell or warning device at the start of a shift.

4. Load shall be well secured and properly balanced before being raised or lowered.

5. Chains, ropes, and slings used for lifting must be continually inspected for damage or wear that could make them unsafe for use.

6. The hoist lines must be vertical before starting a lift.

7. Avoid sudden starts and stops of all crane motion.

Toth 00607

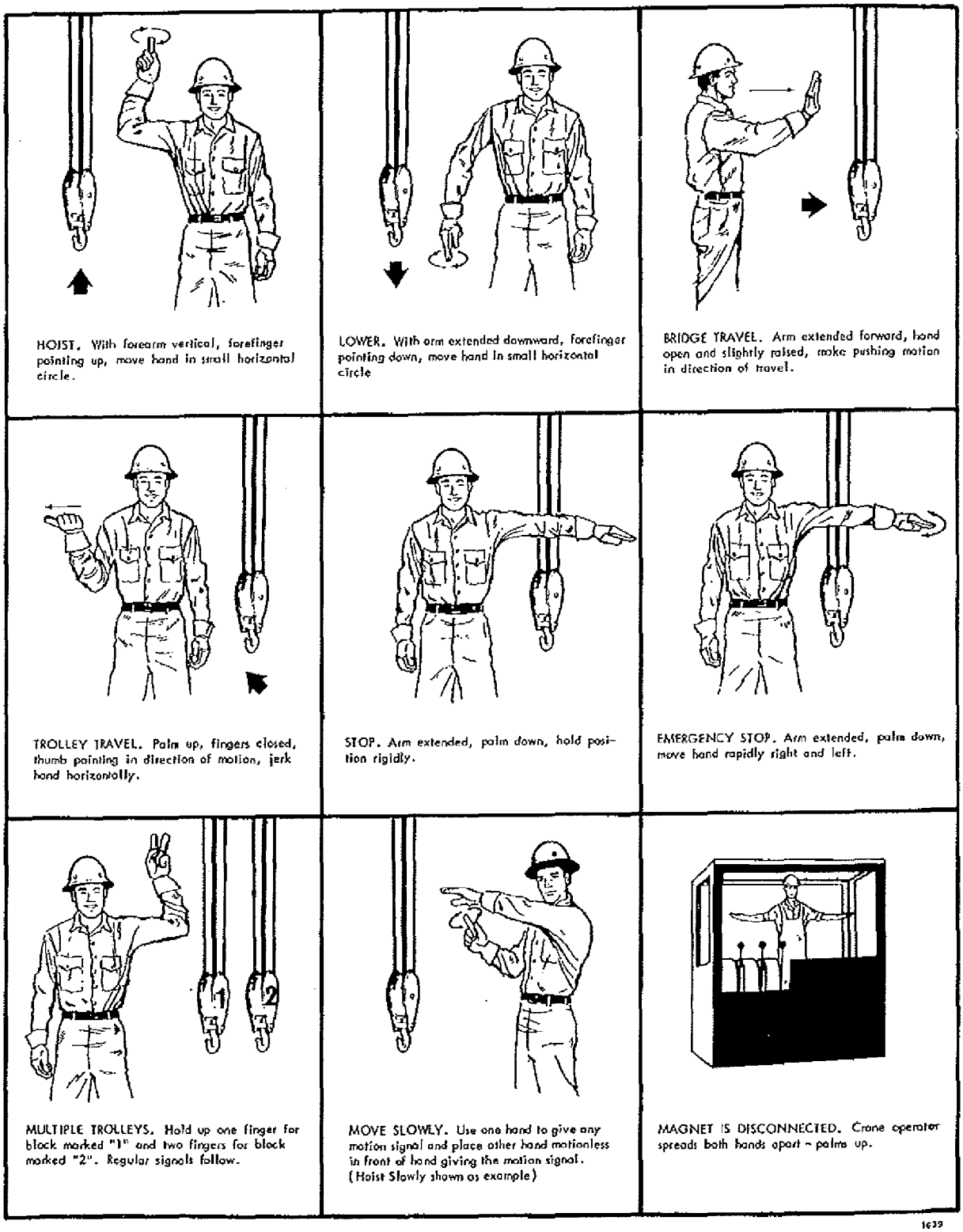

Figure 3-1. Standard Hand Signals

Toth 00608

8. Start a lift only upon receipt of a proper signal from the person who is directing the lift, or an appointed signalman. However, the operator must obey a stop signal at all times no matter who gives it.

9. Loads shall never pass over the heads of workmen or other personnel, or any way endanger their safety.

10. A warning device shall be sounded each time before traveling, and intermittently during travel, especially when approaching floor personnel.

11. Caution shall be exercised to insure that the load does not contact or catch on any obstructions when traveling or lifting.

12. No one shall ride the load, hook, or other lifting devices, or be on the crane while it is in operation.

13. The load shall not be lowered beyond a point where less than two wraps of wire rope remain on the drum, and never below floor level.

14. Know the rated capacity of the crane and do not exceed this capacity, except for test purposes under properly supervised conditions.

15. Whenever a load which approaches the rated capacity of the crane is lifted, raise the load a few inches, return master switch and/or controller to OFF position and check to insure the ability of the brake to hold the load suspended.

16. Before leaving the control station of a crane, the operator shall lower the load to the floor.

WARNING

The operator shall not leave his position at the controls while a load is suspended.

17. An operator's attention to the load and work area shall not be diverted while operating the crane.

18. Wire rope should be visually inspected, daily, for broken wires, excessive wear, stretch, kinking, or twisting. Details of such an inspection are given in SECTION VIII, HOIST SYSTEM.

19. When two or more cranes are used simultaneously to handle a load, an appointed signalman shall direct the operation.

20. If it is necessary to use one crane to push another, carefully inch the crane to engage the second crane, and proceed to push at a slow rate of travel.

21. If the power supply is interrupted during operation of a crane, the operator shall immediately place all controllers in the OFF position.

22. If the crane is used for outdoor operation, it shall be locked in a secure "home" position, prior to leaving the crane, to prevent it from being moved by wind force.

23. Before mechanical or electrical adjustments or repairs are started, all controllers shall be in the OFF position. Main and emergency switches shall be opened with one of them being locked open. Warning signs shall be placed on these switches and later removed only by the person who placed them there. Operators of other cranes on the same runway shall be alerted to prevent danger to the men working on the crane.

24. When a lifting magnet is being connected, disconnected, or repaired, the workman on the ground who is actually performing the work shall signal the crane operator to open the magnet safety switch until work is completed.

25. Replace all protective guards before operating the crane.

26. At least annually, the crane hook should be inspected for cracks by the magnetic particle or other suitable crack testing inspection method, to determine that no cracks are discernible. A hook that is cracked shall be replaced immediately. A hook that is bent so that the throat opening is increased by more than 15% in excess of normal, or is twisted more than ten degrees shall be replaced.

27. Operators shall be familiar with the operation of fire extinguishers, when provided.

HAND SIGNALS

If signals are given from the floor to the crane operator by hand, they must be in accordance with those shown in Figure 3-1.

Toth 00609

SECTION IV
LUBRICATION

GENERAL

To insure proper operation of this machine, all points requiring lubrication must be serviced with the correct lubricant, at the proper time interval. Normal wear points which require lubrication are shown in Figures 4-2 through 4-5. The intervals between lubrication and the type of lubricant to be used are also shown in the illustrations. All of the various arrangements of gear cases, truck assemblies and so forth are not shown, but the general outline for the proper lubrication will apply to any crane regardless of the type or arrangement of components.

Points not considered to be normal wear points (levers, linkages, pins, and so forth) should be lubricated with an oil can once a week. Apply a few drops of motor oil to each exposed pin or lever not equipped with grease fittings to prevent rusting and to provide the limited lubrication required.

The lubrication intervals recommended in this manual are based on one eight hour shift operation of the machine, five days per week. Where more than one shift operates the machine, lubrication schedules should be adjusted accordingly.

Refer to the manufacturer's manual furnished with each machine for information concerning lubrication instructions for purchased equipment. The manufacturer's instructions take precedence over lubrication recommendations in this manual, if a conflict exists.

The following points must be kept in mind when lubricating the machine.

1. Do not allow oil or grease to come in contact with brake shoes or wheel.

2. Wipe up any spilled or overflowed lubricants.

3. Do not overfill gear cases. They are not intended to retain lubricants when filled beyond the maximum indicated oil levels. Use the dipstick, visual oil level indicator or oil level pipe to maintain the proper oil level in the gear case.

4. Before and after applying grease to the grease fittings, wipe the fitting clean to prevent an accumulation of dirt which could be forced in the part being lubricated.

5. Be sure the lubricants are not contaminated before using them.

Toth 00611

LUBRICANT SPECIFICATIONS

The following list identifies lubricants suitable for use on the machine by three methods. These methods are as follows:

CAUTION

The multipurpose grease (MPG) used for initial lubrication at the factory is a soap base, 12-Hydroxy Lithium Stearate type. Other soap base greases are not always compatible with this type of grease. Barium base grease is definitely not compatible. Another soap base grease may be used if experience has proven that the substitute grease is acceptable for the particular application. Before switching to any other type of grease, however, the grease systems must be thoroughly purged of the original type of grease and the affected parts must be removed and cleaned.

1. By P&H Specification Number. This specification number identifies the initial fill lubricant as classified by internal Harnischfeger Corporation Standards.

2. By Military Specification Number. If a Military Specification Number exists for a lubricant that corresponds to the P&H Number in the same line, the Military Specification Number is entered.

NOTE

The absence of a Military Specification Number does not necessarily mean that the lubricant does not meet a Military Specification. It may mean, for instance, that the lubricant has not been tested and qualified by the military because it is relatively new. For that reason, it is not certified as meeting the standards of a particular Military Specification, even though it may be capable of doing so.

3. By Equivalent Lubricant. Equivalent lubricants presently confirmed as meeting the requirements of the P&H specification are listed by manufacturer and trade names. It should be noted that omission of a trade name from the list does not signify disapproval of that particular lubricant. It merely means that, as of the date of this writing, the lubricant has not been tested by P&H. Also, no superiority of a brand of lubricant is to be inferred from the order of appearance on a list. Each list is alphabetical and all products listed are equally acceptable.

HEAVY DUTY MOTOR OIL

INTENDED USE: Lubricating hand-oiled items such as pins, levers and linkages. Also used as gear lube in magnetic cable reel drive gearcase, on cranes so equipped.

SYMBOL	P&H SPEC. NO.	AMBIENT RANGE	MILITARY SPEC. NO.	EQUIVALENT LUBRICANTS	SAE GRADE	MANUFACTURER
MO	451A	-40°F to +50°F	MIL-L-2104B (or latest issue in effect)	Conoco Tracon	SAE 10W	Continental Oil Company
				Encolube HDX	"	Exxon
				Delvac 1200 Series	"	Mobil Oil Corporation
				Rotella T Oils	"	Shell Oil Company
				TBD Mil B Motor Oil	"	Sun Oil Co. - DX Division
				Ursa Oils - Extra Duty	"	Texaco, Inc.
				Super Tenol	"	Sinclair Refining Company
				Amoco 200 Motor Oils	"	Amoco
MO	451C	+10°F to +100°F	MIL-L-2104B (or latest issue in effect)	NOTE: Equivalent lubricants and manufacturers are the same as for P&H Spec. 451A Motor Oil as described above. The only difference, insofar as this description is concerned, is that P&H Specification 451C is an SAE 30 grade oil.		

Toth 00612

SEMI-FLUID GREASE

INTENDED USE: Vertical trolley gear cases not equipped with lube pumps.						
SYMBOL	P&H SPEC. NO.	AMBIENT RANGE	MILITARY SPEC. NO.	EQUIVALENT LUBRICANTS	SAE GRADE	MANUFACTURER
SFG	460	0°F to 200°F		Mobilux EP-023	---	Mobil Oil Corporation

OPEN GEAR AND WIRE ROPE LUBRICANT

INTENDED USE: Brushed or sprayed onto open gears and racks. Wire rope lubrication, in heated condition.						
SYMBOL	P&H SPEC. NO.	AMBIENT RANGE	MILITARY SPEC. NO.	EQUIVALENT LUBRICANTS	SAE GRADE	MANUFACTURER
GL	464	All	VV-L-751	Amovis Lubricant and Amoco Open Gear Comp'd.	*	Amoco
			Type 1 - Regular Grade 1 - Light Grade 1 - Medium Grade 3 - Heavy MIL-L-43914 Grade 1	Richcote Lubricant, Jet Lubricants "Sinclair", and Atlantic-Lubricants 36 thru 40	*	Atlantic Richfield Company
				Coglube	*	Continental Oil Company
				Surett	*	Exxon
				Mobiltac	*	Mobil Oil Corporation
				Cardium EP Comp'ds & Fluids	*	Shell Oil Company
				Crater 2X	*	Texaco, Inc.
				Union Gearshield	*	Union Oil Company of Calif. - Union 76 Division
				Liquid Gear Composition	*	Whitmore Mfg. Co.

*Consult lubricant manufacturer for proper viscosity grade, which will depend on application and climate.

Toth 00613

MULTIPURPOSE GREASE

INTENDED USE: Shaft couplings and bearings, wheel bearings, some motor bearings, and other points equipped with grease fittings.

SYMBOL	P&H SPEC. NO.	AMBIENT RANGE	MILITARY SPEC. NO.	EQUIVALENT LUBRICANTS	MANUFACTURER
MPG	472A (NLGI #0 EP)	*Below -10°F	MIL-G-10924 MIL-G-23827 MIL-G-81827	Litholine Industrial 0 EP "Sinclair"	Atlantic Richfield Oil Co.
				Conolith EP #0	Continental Oil Company
				Rolubricant 0	Humble Oil and Refining Company
				Mobilux EP #0	Mobil Oil Corporation
				Alvania EPRO	Shell Oil Company
				Prestige EP #0	Sun Oil Co. - DX Division
				Multifak EP #0	Texaco, Incorporated
MPG	472B (NLGI #1 EP)	*-20 to +40°F	See above	Amolith No. 1 EP	American Oil Company
				Litholine Industrial 1 EP "Sinclair"	Atlantic Richfield Company
				Conolith EP #1	Continental Oil Company
				Rolubricant 1	Humble Oil and Refining Company
				Mobilux EP #1	Mobil Oil Company
				Alvania EP #1	Shell Oil Company
				Prestige EP #1	Sun Oil Co. - DX Division
				Multifak EP #1	Texaco, Incorporated
MPG	472C (NLGI #2 EP)	*+20 to 125°F	See above	Amolith No. 2 EP	American Oil Company
				Litholine EP Moly "Sinclair"	Atlantic Richfield Oil Co.
				Conolith EP #2	Continental Oil Company
				Rolubricant 2	Humble Oil and Refining Company
				Mobilux EP #2	Mobil Oil Corporation
				Alvania EP #2	Shell Oil Company
				All Purpose EP #2	Sun Oil Company
				Multifak EP #2	Texaco, Incorporated

*Pumpability tests also required when used in centralized lubrication systems. Consult manufacturer of system.

Toth 00614

HIGH TEMPERATURE GREASE

INTENDED USE: This is a special grease which shows high thermal stability and resistance to shock loading and adverse chemical environmental conditions. It is used as a replacement for P&H 472 MPG when reversing service, long life, or high temperature operation demands this premium lubricant.

SYMBOL	P&H SPEC. NO.	AMBIENT RANGE	MILITARY SPEC. NO.	EQUIVALENT LUBRICANTS	MANUFACTURER
HTG	476	(working temperature range) 0°F to +450°	Not available	Shell Darina No. 2 E.P.	Shell Oil Company

Note: The above lubricant is the only one currently approved as meeting P&H Specification No. 476. It is Shell Oil Code Number 71522.

PETROLEUM GEAR OIL

INTENDED USE: All trolley gearcases equipped with lube pumps and all bridge and hoist gearcases, within temperature range indicated. Note: Conforms to AGMA #5.

SYMBOL	P&H SPEC. NO.	AMBIENT RANGE	MILITARY SPEC. NO.	EQUIVALENT LUBRICANTS	MANUFACTURER
GO	486	+40°F to +125°F	---	American Industrial Oil 95	American Oil Company
				Duro Oil S-1000	Atlantic Richfield Company
				Dectol R&O Lubricating Oil, Grade 92	Continental Oil Company
				Nato 220	Exxon USA
				Vactra Oil BB	Mobil Oil Corporation
				Hydraulic Oil, #220	Shell Oil Company
				Sunvis 999	Sun Oil Company - DX Division
				Regal R & O 220	Texaco, Incorporated
				Union UNA x 1000	Union Oil Company of California - Union 76 Division

Toth 00615

HYDRAULIC BRAKE FLUID

INTENDED USE: Intended for use in manual hydraulic brake systems. DO NOT USE IN POWER ASSIST SYSTEMS.					
SYMBOL	P&H SPEC. NO.	AMBIENT RANGE	MILITARY SPEC. NO.	EQUIVALENT LUBRICANTS	MANUFACTURER
HBF	492	All	VV-B-680 (latest issue)	21B Brake Fluid Formula H-63 UCON Brake Fluid 4823	Wagner Electric Corporation Union Carbide Corporation.

SYNTHETIC GEAR OIL - ARCTIC SERVICE

INTENDED USE: Substitute for Petroleum Gear Oil (GO-P&H Spec. 486) in ambient temperatures lower than +20°F.				
SYMBOL	P&H SPEC. NO.	MILITARY SPEC. NO.	EQUIVALENT LUBRICANTS	MANUFACTURER
GOA	474	MIL-L-2105B	Polar Start DN-600 Mobilube SNC Gear Oil	Continental Oil Company Mobil Oil Corporation

WIRE ROPE LUBRICATION

Each time a rope bends over a sheave or straightens from a slack position, many strands move or slide against each other.

Lubrication is a necessity to prevent wear as a result of movement. An equally important reason for correct lubrication is to prevent corrosion of wires and deterioration of the fibre core.

No set rule can be given concerning the frequency of lubrication. This will depend on the conditions to which the rope is subjected. The severity of the duty and the amount of corrosive elements to which the rope is subjected will have to serve as an index in determining the need for relubrication.

An open gear and wire rope lubricant (GL) conforming to P&H specification 464 is recommended for use as wire rope lubricant. All wire rope lubricants must have the following general qualities:

1. They should contain no acids or alkalies.

Toth 00616

2. They should have sufficient adhesive strength to stay on the rope.

3. They should be able to penetrate between the wires and strands.

4. They should be insoluble under the conditions of application.

5. They should have high film strength.

6. They should resist oxidation.

Correct methods should be used in applying the lubricant. Wire ropes that have been in service should always be cleaned thoroughly before they are relubricated. Use wire brushes, scrapers, or compressed air to clean the rope. All possible foreign material and old lubricant should be removed from the valleys between the strands and the spaces between the outer wires.

The lubricant should be thin enough to penetrate the strands to the core, but not so thin that it will run off the rope. It must not be so thick that it merely coats the outside of the rope. The best lubricant is a fairly thick, semi-plastic type, which is applied hot, in a thinned condition. This type of lubricant will penetrate while hot and cool off to form a plastic filler and coating, which will then resist the penetration of water.

Three methods of applying lubricant to wire rope are illustrated in Figure 4-1. Each has its advantages, and no single method is recommended in preference to the other. The most convenient method should be used, whenever necessary.

ELECTRIC MOTORS

Complete lubrication instructions are provided in the ED Bulletins covering the electric motors. Refer to Bulletin ED-6 for AC wound-rotor motors, to Bulletin ED-7 for DC motors, and to Bulletin ED-11 for AC squirrel-cage motors.

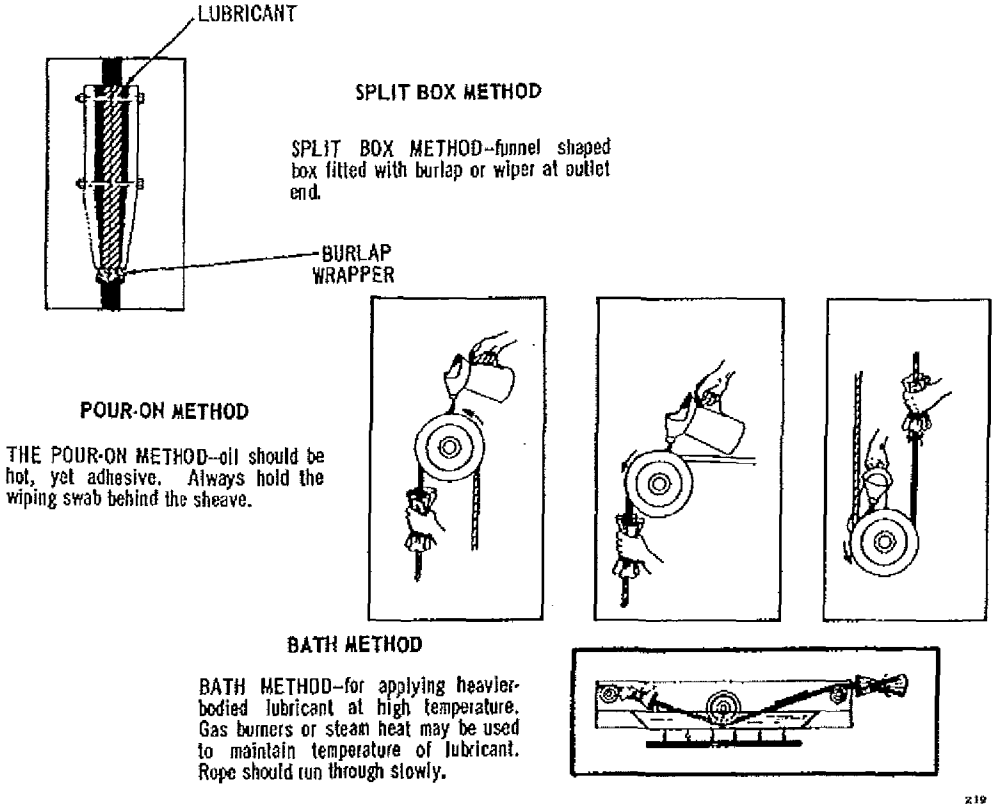

Figure 4-1. Lubricating Wire Rope

Toth 00617

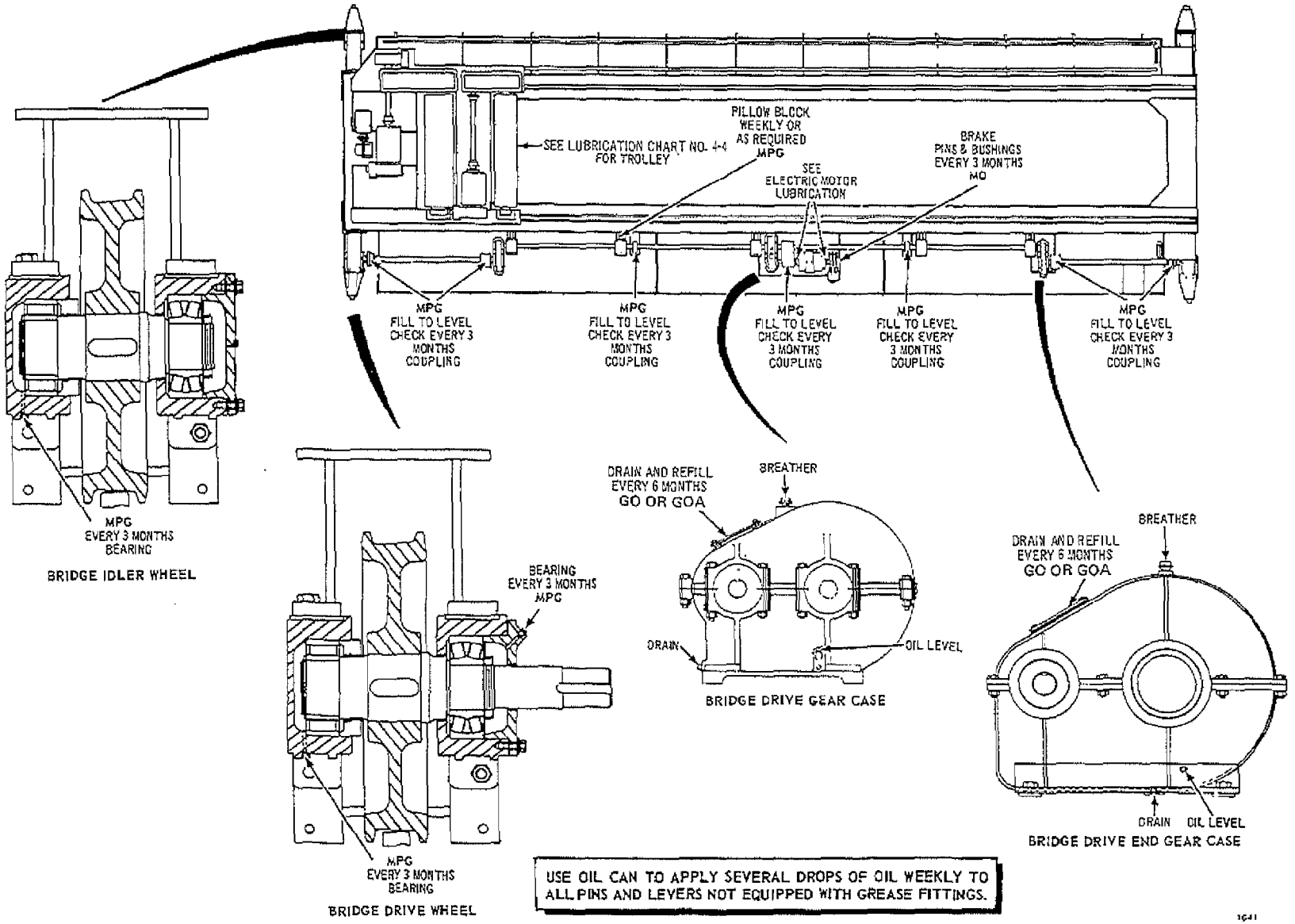

Figure 4-2. Lubrication Chart (Typical Bridge)

Toth 00618

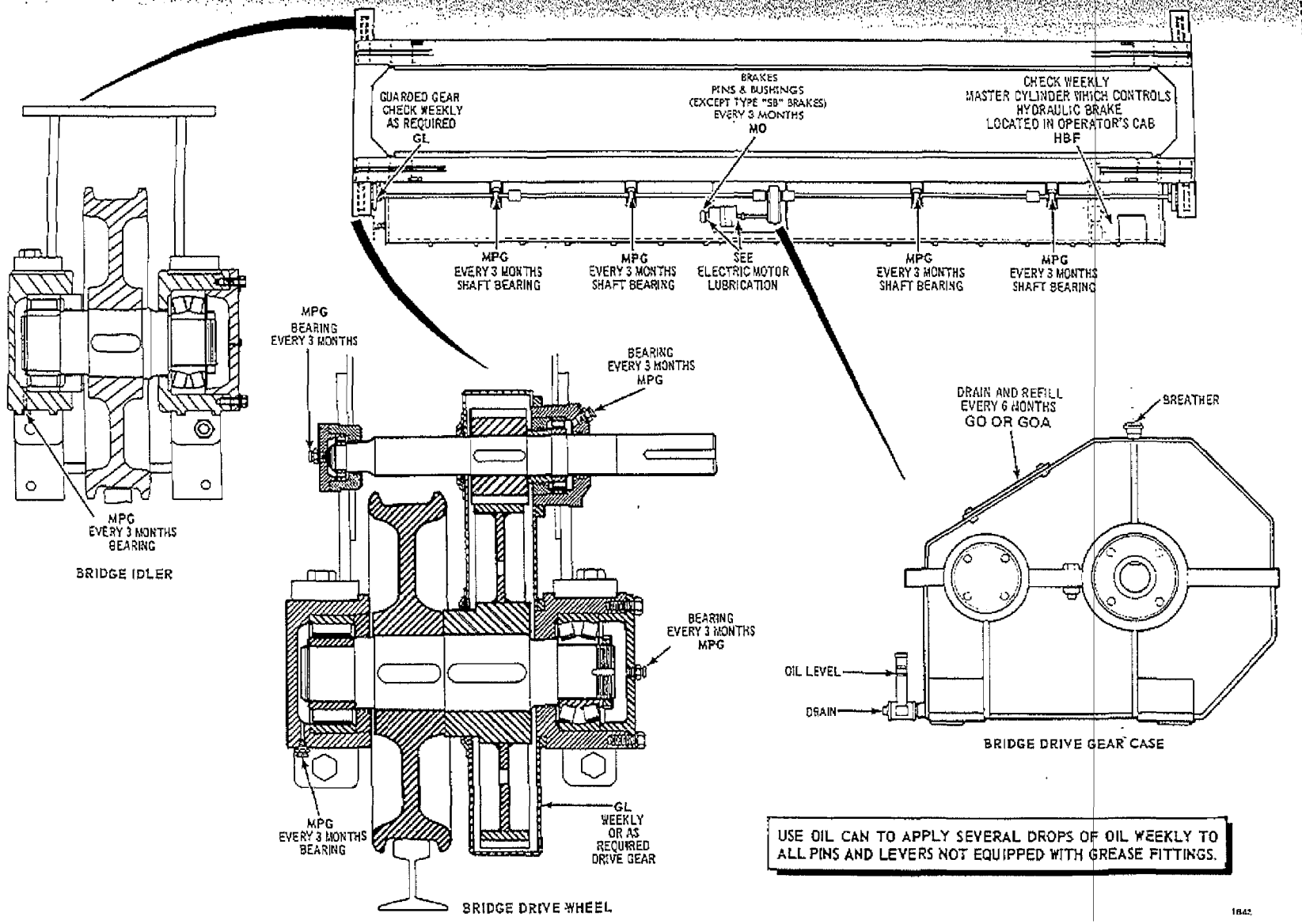

Figure 4-3. Lubrication Chart (Typical Bridge)

Toth 00619

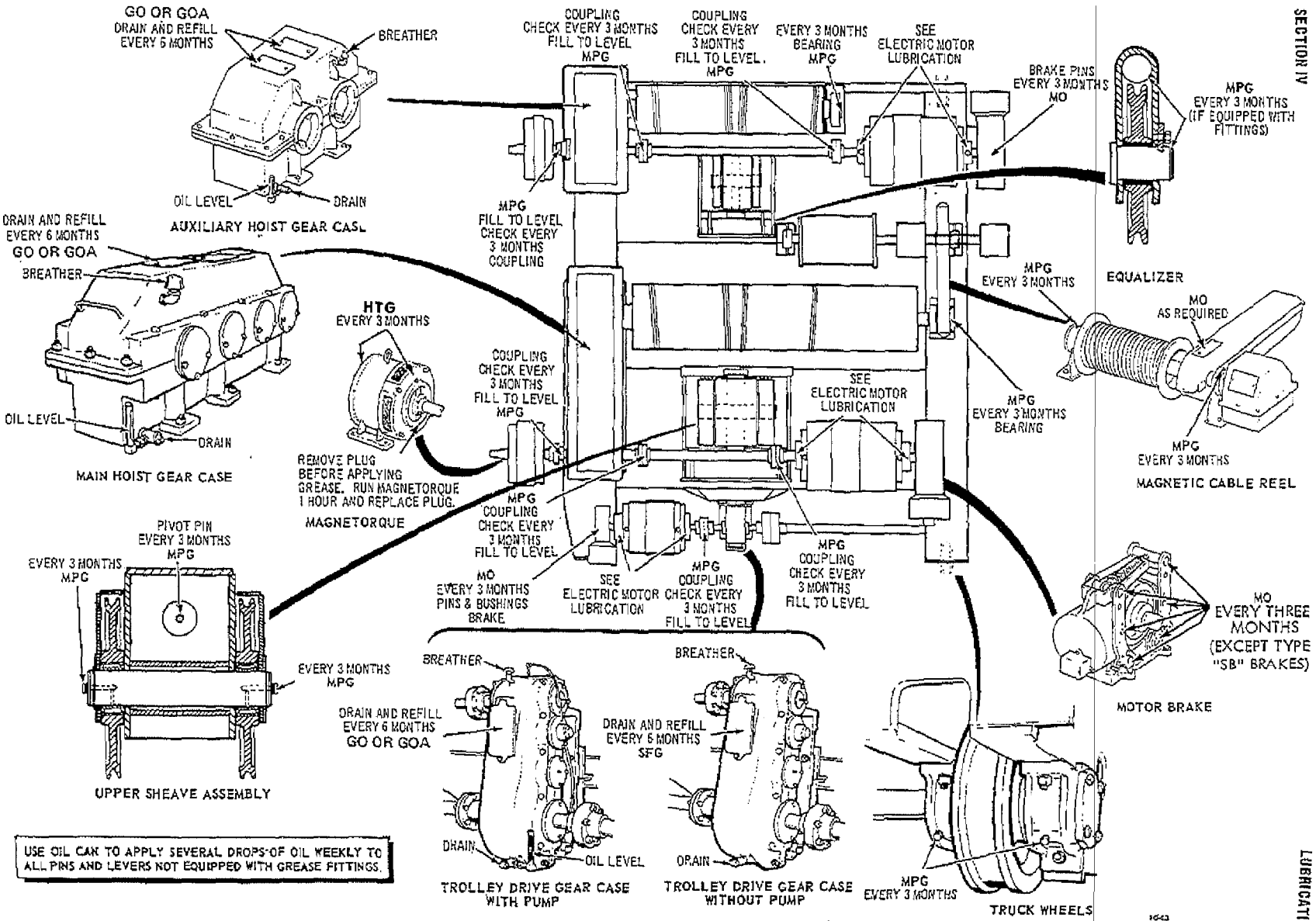

Figure 4-4. Lubrication Chart (Typical Trolley)

Toth 00620

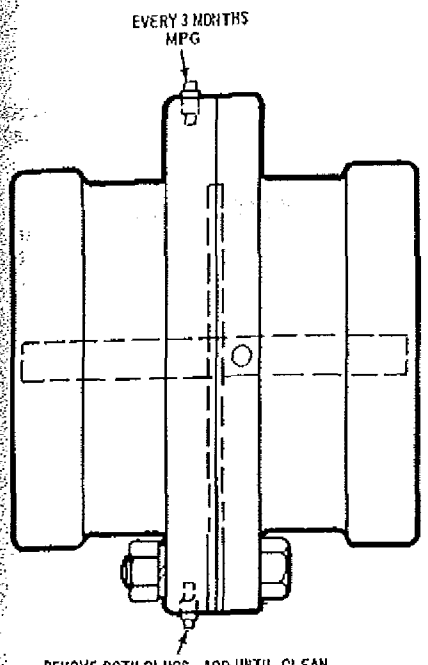

REMOVE BOTH PLUGS. ADD UNTIL CLEAN LUBRICANT APPEARS AT OPPOSITE HOLE.

FLEXIBLE COUPLING

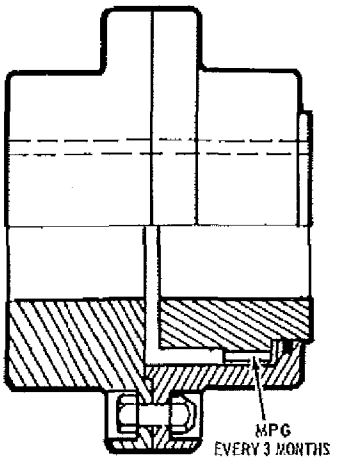

REMOVE BOTH PLUGS. ADD UNTIL CLEAN LUBRICANT APPEARS AT OPPOSITE HOLE.

SEMI-FLEXIBLE COUPLING

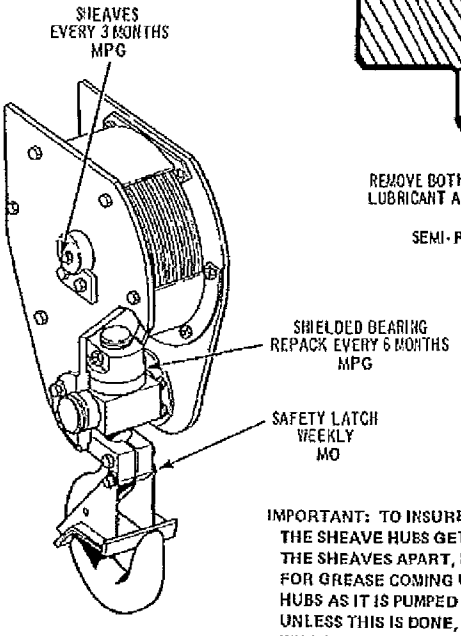

BOTTOM BLOCK

IMPORTANT: TO INSURE THAT THE FACES OF THE SHEAVE HUBS GET LUBRICATED, PRY THE SHEAVES APART, IN PAIRS, AND OBSERVE FOR GREASE COMING UP BETWEEN THE SHEAVE HUBS AS IT IS PUMPED INTO THE FITTING. UNLESS THIS IS DONE, THE HUB SIDE SURFACES WILL WEAR RAPIDLY AND THE RESULTING METAL FILINGS CAN CAUSE BEARING FAILURE.

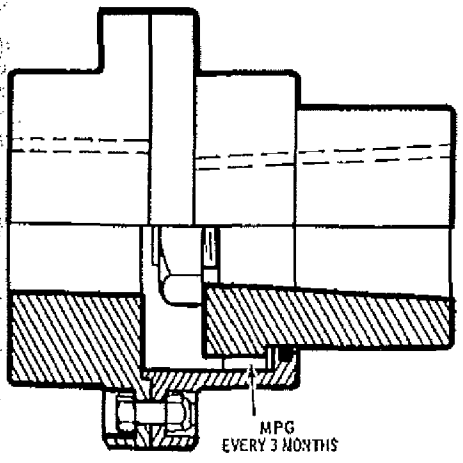

REMOVE BOTH PLUGS. ADD UNTIL CLEAN LUBRICANT APPEARS AT OPPOSITE HOLE.

FLEXIBLE COUPLING

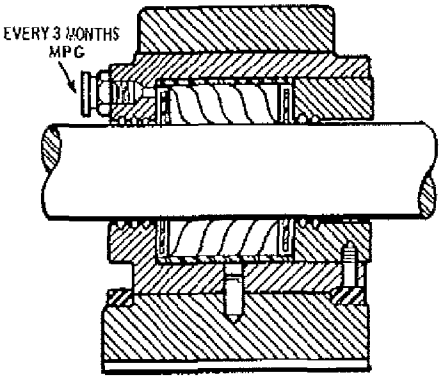

PEDESTAL BEARING

USE OIL CAN TO APPLY SEVERAL DROPS OF OIL WEEKLY TO ALL PINS AND LEVERS NOT EQUIPPED WITH GREASE FITTINGS.

1644

Figure 4-5. Lubrication Chart

Toth 00621

CENTRALIZED LUBRICATION SYSTEMS

Cranes equipped with Centralized Lubrication Systems should use Multipurpose Grease (MPG), NLGI #1. For outdoor operation in low ambient temperatures, NLGI #0 should be used instead of NLGI #1.

Refer to the manufacturer's instructions furnished for the operation and maintenance of the system.

COLLECTOR LUBRICATION

All hinge points of collectors should be lubricated, as required, with a few drops of oil (MO) to insure free movement.

NOTE

Do not lubricate hinge points of collectors if atmospheric conditions are such that dirt will build-up on the oil and affect the movement of the collectors.

Toth 00622

SECTION V
CONTROL SYSTEMS

GENERAL

This section covers the theory of operation, maintenance, and adjustment of a number of different types of control systems. Because of the many different combinations of a basic type of control, the descriptions will be general without references to any particular applications.

The power supply must be in accordance with the crane specifications as ordered. If the crane is operated on a power supply other than that specified, serious damage could result to the electrical equipment.

PROTECTIVE PANELS

GENERAL

The crane protective panels, when used, include all disconnect and overload devices, which include the main disconnect knife switch (with provisions for external operation), main contactor, overload relays for each motor circuit, and control circuit fuses. When a manual type control with a control circuit limit switch is used, the reversing and limit switch contactors are included on the panel.

On direct current protective panels an inverse time overload relay is supplied for each motor circuit, and an instantaneous trip overload relay in the common line.

On alternating current crane protective panels, two inverse time overload relays are supplied for each motor circuit. Figure 5-1 illustrates a typical AC protective panel and Figure 5-2 illustrates a typical DC protective panel.

All the equipment is mounted in a heavy gage sheet steel enclosure. The enclosure has hinged doors that are interlocked with the main disconnect knife switch so that the door cannot be open unless the switch is in the OFF or OPEN position. This same interlock prevents the switch from being closed until the doors are closed.

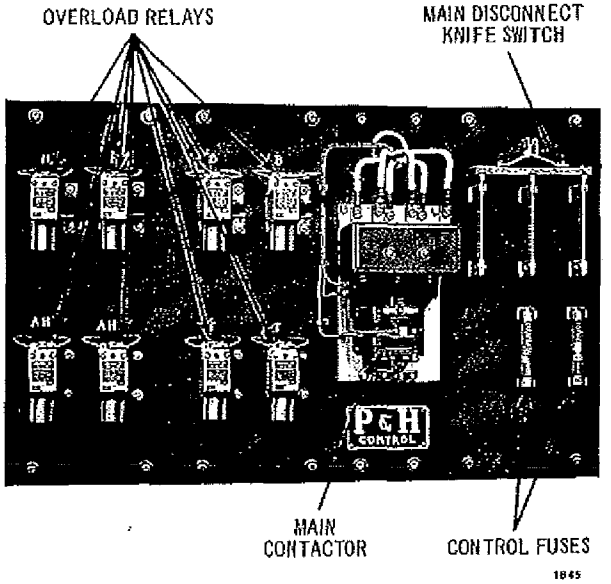

Figure 5-1. AC Protective Panel

Toth 00623

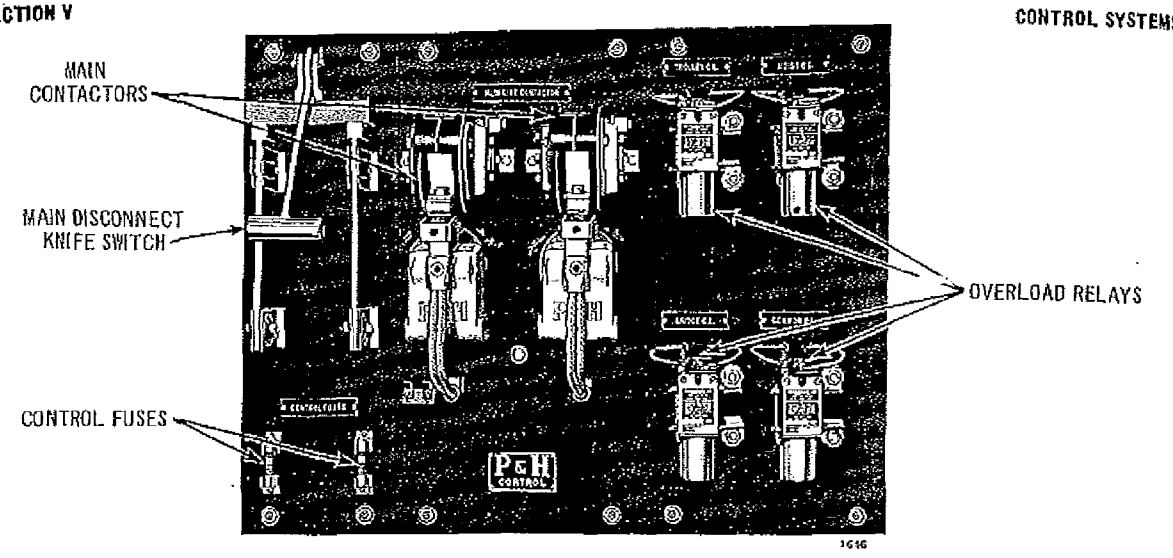

Figure 5-2. DC Protective Panel

The main contactor is reset and opened by the START-STOP pushbutton mounted in the front of the cab so that it is easily accessible to the operator.

MAGNETIC OVERLOAD RELAYS

GENERAL. The magnetic overload relays used for motor overcurrent protection are of the automatic reset type.

The plunger (Figures 5-3 and 5-4) of each relay is stamped L, M, and H (low, medium, and high). The nameplate lists the amperage values which corresponds to the plunger markings.

Magnetic overload relays are of two types: time limit and instantaneous trip. The time limit overload relay has a time delay before tripping on overload. The instantaneous trip overload relay trips immediately on overload.

ADJUSTMENT (TIME LIMIT RELAY). The correct position of the adjusting indicator on the plunger rod in relation to the solenoid plunger must be determined before the relay can be properly adjusted. To determine the correct position, proceed as follows:

1. Obtain the full load ampere rating from the motor nameplate.

2. For AC or series reversing DC motors add 25 per cent to full load rating. Select proper location of the adjusting indicator on plunger rod by comparing the ampere requirements of the motor with the amperage ratings listed under L, M, and H on the relay nameplate, and set the adjusting indicator to correspond with the location on the solenoid plunger.

3. For DC dynamic brake circuits the procedure is the same as described above, except that 50 per cent is added to the full load ampere rating of the motor.

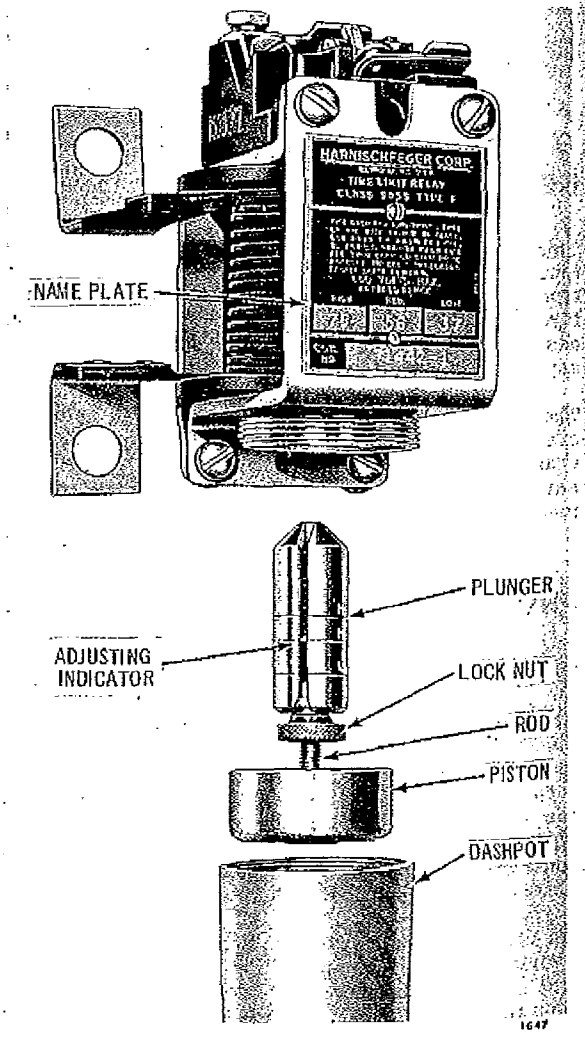

Figure 5-3. Magnetic Overload Relay (Time Limit Type)

Toth 00624

The time limit relay has two adjustments that must be considered.

1. Proper amperage rating

2. Proper timing

After the correct adjusting indicator location has been determined, the procedure for adjusting the amperage setting of the time limit relay is as follows:

1. Unscrew the dash pot and remove the plunger and piston assembly. See Figure 5-3.

CAUTION

Care should be taken that the exposed dash pot oil does not become contaminated.

2. Loosen the knurled locknut at the base of the plunger.

3. Rotate the plunger until the adjusting indicator on the plunger rod is at the correct setting, as determined above.

4. Tighten the locknut. Place the piston assembly in the dash pot. Fill the dash pot to the proper oil level. Slide the dash pot and piston onto the relay. Tighten the dash pot.

NOTE

The dash pot must be 2/3 full with the piston assembly in place in the dash pot. USE ONLY DASH POT OIL FOR FILLING.

The length of time the time limit relay is delayed is controlled by a valve disc at the bottom of the piston assembly. By covering the different size holes in the piston, the time delay can be increased or decreased. The following table shows the relatively time delay that can be obtained by covering the various holes.

WARNING

Do not cover all the holes or the unit will not operate.

	DELAY	LARGE HOLE	LARGE HOLE	SMALL HOLE
1.	Shortest	Open	Open	Closed
2.	Intermediate Short	Closed	Open	Open
3.	Intermediate Long	Open	Closed	Closed
4.	Longest	Closed	Closed	Open

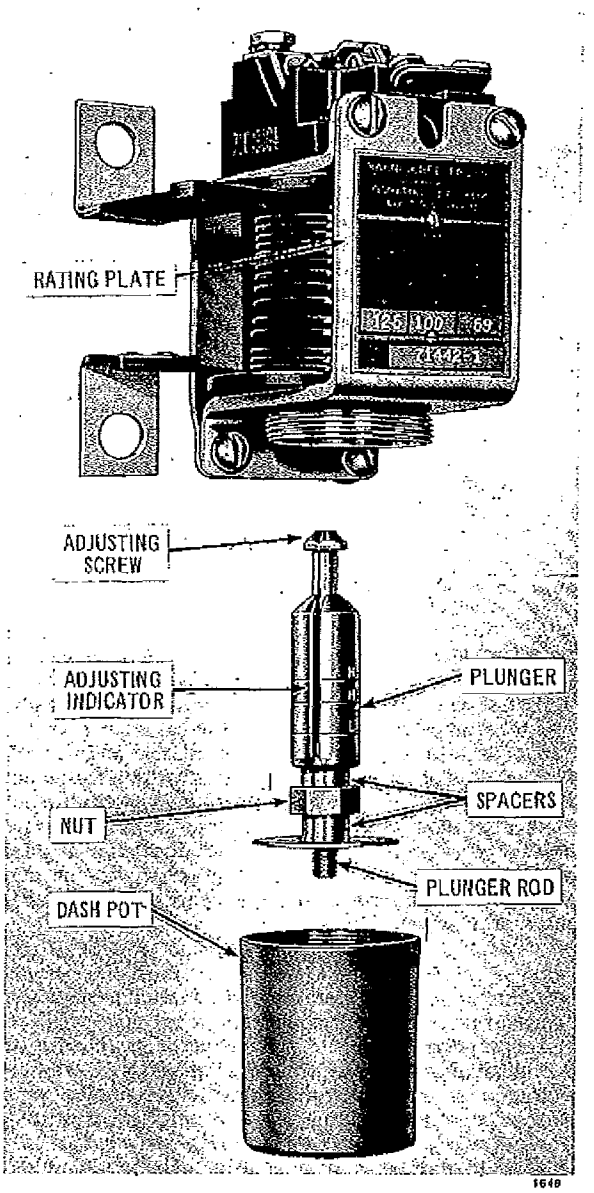

Figure 5-4. Magnetic Overload Relay (Instantaneous Trip)

Minor variations from the exact amperage setting may be expected; therefore, in some cases it may be necessary to set the relay amperage setting slightly above the amperage setting determined from motor nameplate rating. However, with the time limit relay this should not be done until the time delay adjustment has been completed.

ADJUSTMENT (INSTANTANEOUS TRIP RELAY). The procedure for adjusting the instantaneous trip relay is as follows:

1. The instantaneous trip relay should be adjusted to trip when overloaded to approximately 250-300 per

Toth 00625

cent of motor full load ampere rating. The motor full load ampere rating is obtained from the motor nameplate. After the overload rating has been determined, compare the overload rating with the L, M, and H ratings on the relay nameplate to determine the correct location of the adjusting indicator in relation to the plunger.

2. Remove the dash pot, and remove the plunger assembly. Hold the nut and turn the adjusting screw until the adjusting indicator is at the correct location as determined above. See Figure 5-4.

3. Replace the plunger in the dash pot and reassemble the relay.

WARNING

Do not put oil in the dash pot.

AC MAGNETIC CONTROL

DESCRIPTION

THEORY OF OPERATION. The voltage on the slip rings of an AC wound rotor motor varies directly in proportion to the slip frequency of the rotor. The frequency and voltage are at twice the line frequency and double the motor secondary voltage when plugging at synchronous speed. Therefore, if the slip ring voltage is applied to a rectifier the resulting DC voltage output will vary proportionally to the slip frequency of the rotor and inversely proportional to the motor speed.

As there are innumerable combinations of motor horsepower and secondary voltage rating possibles, the operating voltage of the control is chosen to be constant. By using a potentiometer, the control voltage is matched to the particular motor open secondary voltage. For practical purposes the surge voltage when starting will equal the nameplate open secondary voltage and the surge voltage when plugging will be 100-200 per cent of the open secondary voltage.

The DC full wave rectifier output is filtered by a condenser to prevent faulty operation or relay chatter.

The relays are connected in parallel across the rectifier and each relay has a normally closed contact in series with an accelerating contactor coil. The surge voltage due to starting or plugging will operate all the relays to open the accelerating contactor coil circuits. As the voltage decreases due to an increase in speed, the relays drop-out in turn allowing the accelerating contactor to close. Relay drop-out is governed by coil voltage and relay adjustment. The relay coil is designed to have a drop-out voltage low enough for the highest speed step.

On countertorque hoist applications, one of the relays is connected and adjusted to act as an overspeed relay to prevent excessive lowering speed in the minimum countertorque control step.

REVERSING-PLUGGING CONTROL. The magnetic reversing-plugging control provides five speed steps for both directions of travel. A motor circuit and fused control circuit knife switch are provided on the control panel. By opening the motor circuit knife switch the control circuit and contactor sequence can be checked without energizing the motor circuit. Place a jumper across the normally open contacts of relay 4R to check the contactor sequence. See Figure 5-5.

CAUTION

The jumper across the normally open contacts of relay 4R must be removed after the contactor sequence has been checked. Failure to remove the jumper may result in faulty operation or possible damage to the control system.

Motor circuit overcurrent protection is provided with inverse time overload relays in two phases of the motor circuit. Low voltage protection prevents restarting of the motion after the low voltage relay

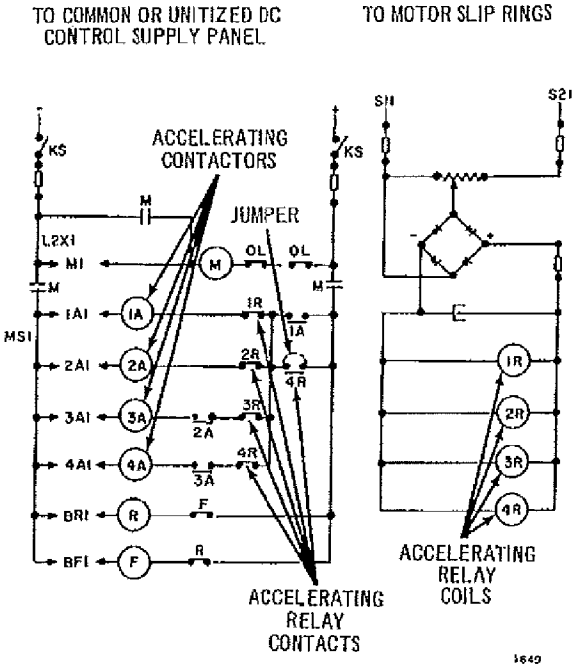

Figure 5-5. Typical Reversing - Plugging Control

Toth 00626

opens. When the power is interrupted by opening the main power supply switch, due to low voltage or an overload relay tripping, the master switch must be returned to the neutral position before the low voltage relay will close and the control panel becomes operative.

The reversing contactors are mechanically and electrically interlocked. All accelerating contactors are controlled by accelerating relays. The first accelerating relay serves as a plugging relay. This permits the operator to manually control the acceleration or hold any speed step. Acceleration is controlled automatically when the master switch is rapidly advanced. The plugging and accelerating relays are controlled by a simple automatic scheme which is dependent on the motor secondary voltage. This prevents high current surges when plugging or accelerating, and also protects the mechanical parts from excessive shock.

MAGNETORQUE CONTROL. The MAGNETORQUE® control is used in conjunction with a conventional slip ring motor and eddy current load brake.

The control provides five speed steps in both the hoisting and lowering directions. A motor circuit and fused control circuit knife switch are provided on the control panel. By opening the motor circuit knife switch, the control circuit and contactor sequence can be checked without energizing the motor circuit. The plugging and accelerating relay contacts must be maintained in the closed position, and a jumper placed across the normally open contacts of relay 4R to check the contactor sequence. See Figure 5-5.

CAUTION

The jumper across the normally open contacts of relay 4R must be removed after the contactor sequence has been checked. Failure to remove the jumper may result in faulty operation or damage to the control system.

Motor circuit overcurrent protection is provided with inverse time overload relays in two phases of the motor circuit. Low voltage protection prevents restarting of the motion after the low voltage relay opens. When the power is interrupted by opening the main power supply switch, due to low voltage or an overload relay tripping, the master switch must be returned to the neutral position before the low voltage relay will close and the control panel becomes operative.

The reversing contactors are mechanically and electrically interlocked. The last three accelerating contactors are controlled by accelerating relays. This permits the operator to manually control the acceleration or hold any speed step.

Acceleration is controlled automatically when the master switch is rapidly advanced. The accelerating relays are controlled by a simple automatic scheme which is dependent on the motor secondary voltage. This prevents high current surges when plugging or accelerating, and also protects the mechanical parts from excessive shock.

REVERSING-COUNTERTORQUE LOWERING CONTROL. The magnetic countertorque control is designed for service where an initial load is suspended from the hoist at all times. Such applications as grab bucket cranes and constant service magnet cranes are typical. The control differs from the conventional type of control by the use of reverse torque to offer subsyncronous speed control.

The control provides five speed steps in both hoisting and lowering. The first three lowering control steps are countertorque points. A motor circuit and fused control circuit knife switch are provided on the control panel. By opening the motor circuit knife switch, the control circuit and contactor sequence can be checked without energizing the motor circuit. Accelerating relay contacts must be maintained in the closed position to check contactor sequence. To check the overspeed circuit, manually operate the overspeed relay to close the normally open contacts. Motor circuit overcurrent protection is provided with inverse time overload relays in two phases of the motor circuit. Low voltage protection prevents restarting of the motion after the low voltage relay opens. When the power is interrupted by opening the main power supply switch, due to low voltage or an overload relay tripping, the master switch must be returned to the neutral position before the low voltage relay will close and the panel becomes operative.

The reversing contactors are mechanically and electrically interlocked. The last three accelerating contactors are controlled by accelerating relays. This permits the operator to manually control the acceleration and hold any speed step. Acceleration is controlled automatically when the master switch is rapidly advanced. An overspeed relay is also included to prevent excessive lowering speed in the minimum torque steps two and three. The accelerating relays and overspeed relay are controlled by a simple automatic scheme which is dependent on the motor secondary voltage. This prevents high current surges when plugging or accelerating, and also protects the mechanical parts from excessive shock.

OFF POSITION COUNTERTORQUE CONTROL. Refer to Figure 5-6 when reading the following description. The off position countertorque lowering control operates exactly the same as the reversing countertorque lowering control. The off position countertorque lowering control has an additional circuit which automatically retards the lowering motion and sets the motor brake when the master switch is returned to the OFF position. This ensures that the motion slows down before the motor brake sets, thereby reducing motor brake lining wear and shock loading of the mechanical components.

Toth 00627

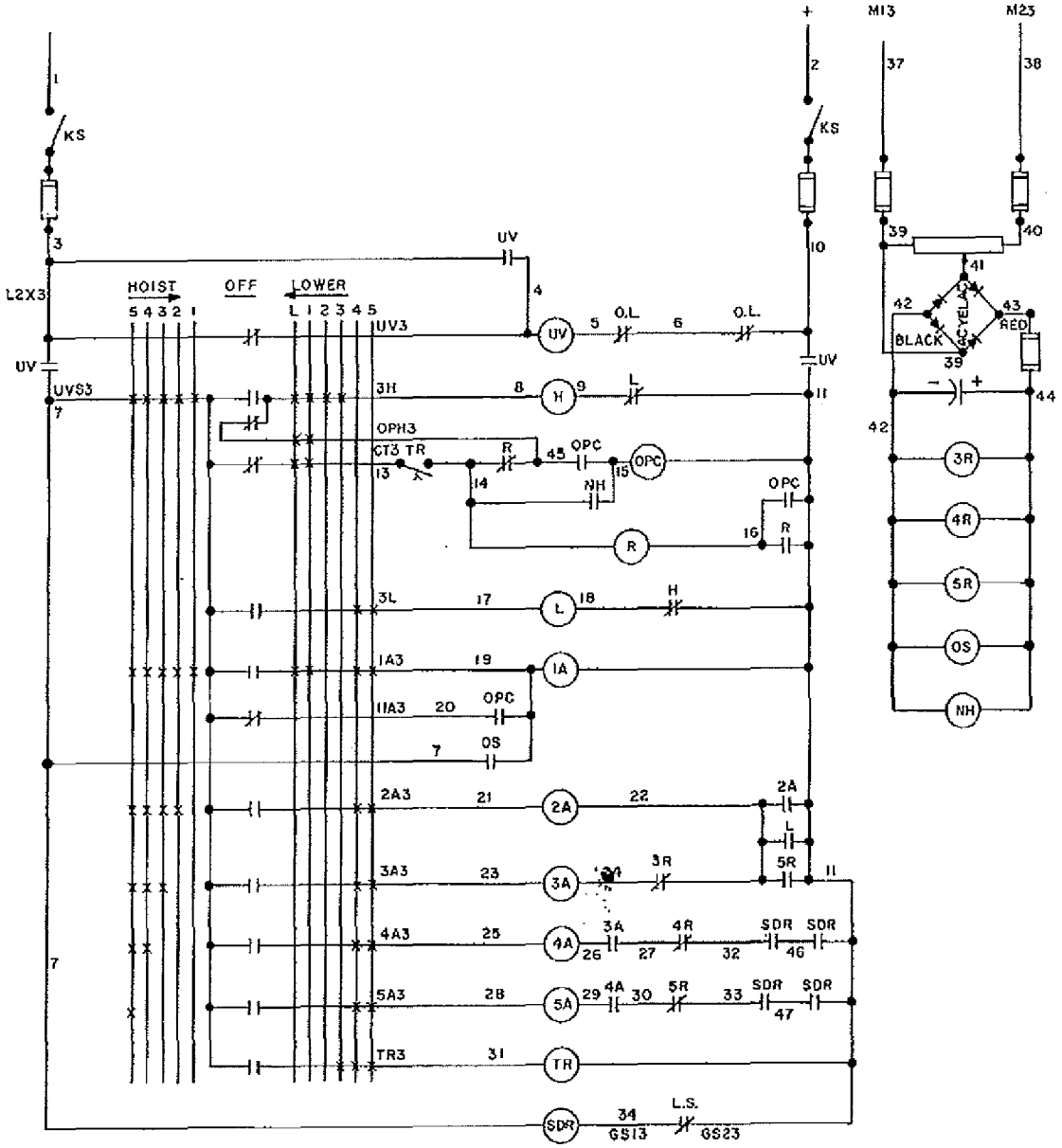

CONTACTOR SEQUENCE														
CONT	HOIST					OFF	LOWER							
	5	4	3	2	1		L	1	2	3	4	5		
L											X	X		
H	X	X	X	X	X		X	X	X	X				
1A	X	X	X	X	X		X	X			X	X		
2A	X	X	X	X							X	X		
3A	X	X	X								X	X		
4A	X	X									X	X		
5A	X										X	X		
UV	X	X	X	X	X	X	X	X	X	X	X	X	X	
TR											X	X	X	

"X"- INDICATES CONTACTOR CLOSED

1650

Figure 5-6. Typical Off-Position Countertorque Control

Toth 00628

When the master switch is placed in the third, fourth, or fifth steps lowering, relay TR will be actuated, thus setting up the circuit to make the off position countertorque circuit effective when the master switch is returned to the OFF position. Relay contacts CT3, TR, and NH will close maintaining a circuit for relay OPC. Relays H and 1A will be closed, offering the same maximum countertorque as if the operator had held the master switch in the first lowering step. Contactor OPC then closes relay R, which transfers the maintaining circuit to relays TR and NH. Normally the load will be decelerated by motor retarding torque and relay NH will drop out. If relay OPC does not operate, timing relay TR will open the R relay, stopping the lowering motion and setting the motor brake.

ADJUSTMENT

To adjust the AC magnetic voltage control system, proceed as follows:

1. Remove potentiometer connection (T, Figure 5-7) and connect a source of 60 cycle variable voltage to the AC input terminals of the rectifier. Connect an AC voltmeter (V1) across the AC input terminals. The supply voltage must be variable between 130 volts and zero volts.

2. Adjust the relay air gap (A, Figure 5-8) and spring length (B) to obtain pickup and drop-out voltages at V1 to within 1 or 2 volts of the voltages shown in Table 5-1.

3. Reconnect potentiometer tap (T), connect a second voltmeter (V2) and a source of 60 cycle voltage to S1 and S2. This power source must be capable of delivering a voltage equal to the motor secondary voltage, and the meter (V2) must have a range that extends through this value.

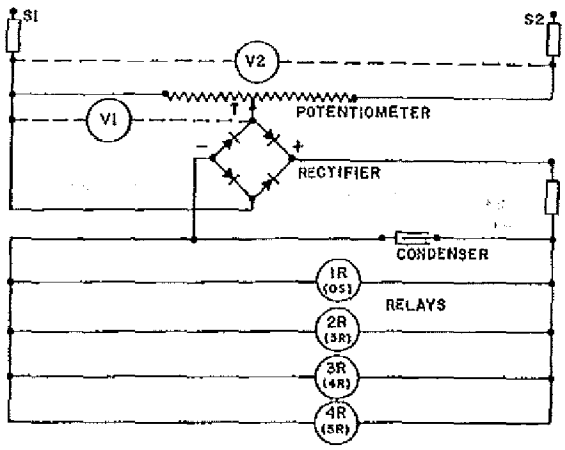

Figure 5-7. Wiring Diagram

4. Adjust potentiometer tap (T) until V1 reads 75 volts when V2 reads the motor secondary voltage.

CAUTION

Do not maintain the voltages at these values for any length of time. The resistors and relay coils are designed for part time duty only at these values, therefore, are in danger of becoming overheated.

5. The potentiometer must also be adjusted after the motor, resistors and control are installed and wired. Connect a voltmeter (V1) across the rectifier AC input terminals. With the motor held in a stationary

Table 5-1. Pickup and Drop-Out Voltage

Application	Relay	NH	0S	1R	2R	3R	4R	5R
COM-1 Rev. Bridge or Trolley	Pickup			74	68	56	32	
	Drop-out			66	54	46	25	
COM-161 Magnetorque Bridge Braking	Pickup			74	68	56	32	
	Drop-out			66	54	46	25	
COM-1 Load Brake Hoist	Pickup			68	56	32		
	Drop-out			54	46	25		
COM-61 Magnetorque Hoist	Pickup			78	56	32		
	Drop-out			71	46	25		
COM-55 Countertorque Hoist	Pickup	82	128			66	58	42
	Drop-out	72	82			54	47	34

Toth 00629

Table 5-2. V1 Voltmeter Reading with Motor Secondary Resistor Connected to Slip Rings

Application	Master Controller Position	V1 Volts
COM-1 Rev. Bridge or Trolley	First Step - Either Direction	68-72
COM-161 Magnetorque Bridge	First Step - Either Direction	68-72
COM-1 Load Brake Hoist	First Step - Hoist or Lower	68-72
COM-61 Magnetorque Hoist	First Step - Lower	72-76
COM-55 Countertorque Hoist	Third Step - Lower	68-72

position, move the master switch to the position indicated in Table 5-2. Be sure the motor does not rotate. Read V1 and return the master switch to the OFF position. Open the control circuit knife switch and move the potentiometer tap (T) in the required direction to obtain the voltage shown in Table 5-2 at V1.

On any particular crane installation the motor will most likely be loaded to a greater or lesser degree than average. Therefore, improved performance may often be obtained by moderately changing these adjustments on the job.

Relay 1R should be adjusted to close just before the motor reverses during a plugging operation. The relays may be made to close earlier by reducing the air gap (A, Figure 5-8) or to close later by increasing the air gap.

The relay may also be made to close earlier by increasing the spring length (B) or later by decreasing it. Generally, more positive relay operation will result with a stiff (short) spring and a long air gap.

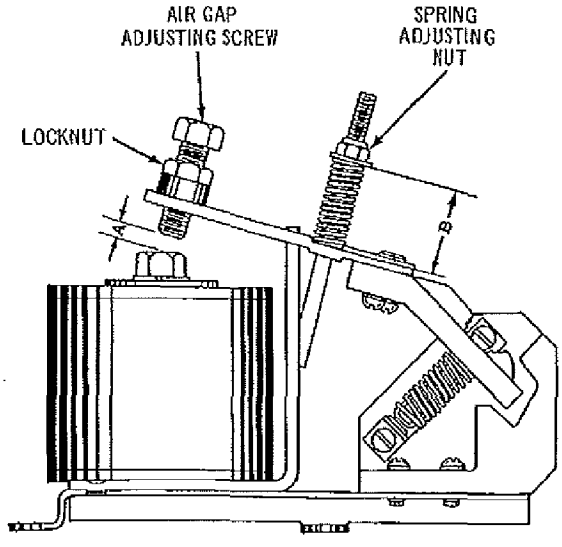

Figure 5-8. Type CV-3 Relay

It is best not to change the factory adjustment of the spring, except in extreme cases. The air gap should be maintained to within 0.010 to 0.015 inch.

CAUTION

NEVER turn the air gap adjusting screw down to the point where the adjusting screw can touch the relay coil retainer screw. Be sure the jam nut locks the adjusting screw.

When field adjustments are desirable, they should be made to obtain approximately equal motor current surges not exceeding 200 per cent on each control step. This results in the smoothest acceleration.

DC MAGNETIC CONTROL

DESCRIPTION

THEORY OF OPERATION. Voltage acceleration is a simple automatic control scheme which is dependent on armature voltage. After the initial adjustment, the rate of acceleration will remain fixed. This control prevents high current surges when plugging or accelerating, and also protects the mechanical parts from excessive shock.

The armature voltage of a DC motor depends on the field strength and armature speed. It varies from nearly line voltage when the motor is running, through zero at zero speed to nearly line voltage (of reverse polarity) when the motor is plugged at 100 per cent speed. Thus, the armature voltage can be considered as varying directly with motor speed.

The DC voltage acceleration control consists of a group of normally open acceleration relays whose coils are connected so as to measure this armature voltage. Each of these relays are adjusted to operate at a different preset voltage. As the armature voltage rises during the acceleration of the motor, these relays close in sequence; their contacts close circuits to the accelerating contactors which in turn close to bring the motor up to normal speed.

Toth 00630

The plugging control portion of this system consists of another normally open relay PR with a double coil; PR1 and PR2. PR1 is connected to the motor armature circuit the same as the accelerating relay coils above. PR2 is connected across the control circuit power supply. When the motor starts from rest PR2 closes the PR contacts immediately. This completes the acceleration contactor coil circuit so that the motor accelerates normally under control of the accelerating relays.

However, if the operator plugs the motor (suddenly reverses the control while the motor is still running in the original direction) the polarity of coil PR1 reverses, causing it to "buck" coil PR2. This prevents the PR contacts from closing and locks out all the accelerating contactors. The motor is smoothly decelerated with all the motor accelerating resistance in the circuit. As the motor slows down the armature voltage diminishes, which weakens the "bucking" effect of coil PR1. Near zero speed PR2 closes the PR contacts and the motor is accelerated the same as when starting from rest.

REVERSING-PLUGGING CONTROL. The magnetic reversing-plugging control provides five speed steps for both directions of travel. A motor circuit and fused control circuit knife switch are provided on the control panel. By opening the motor circuit knife switch, the control circuit and contactor sequence can be checked without energizing the motor circuit. The plugging and accelerating relays must be blocked closed to check contactor sequence. Motor circuit overcurrent protection is provided by one inverse time and one instantaneous overload relay. Low voltage protection prevents restarting of the motion after the low voltage relay opens. When the power is interrupted by opening the main power supply switch, due to low voltage or an overload relay tripping, the master switch must be returned to the neutral position before the low voltage relay will close and the panel becomes operative.

The reversing contactors are mechanically and electrically interlocked. The first accelerating contactor is controlled by a plugging relay; all the other accelerating contactors are controlled by accelerating relays. These permit the operator to manually control the acceleration or hold any speed step. Acceleration is controlled automatically when the master switch is rapidly advanced. The plugging and accelerating relays are controlled by a simple automatic scheme which is dependent on the motor armature voltage. This prevents high current surges when plugging and accelerating, and also protects the mechanical parts from excessive shock.

REVERSING-DYNAMIC LOWERING CONTROL. The hoist control provides power hoisting and power or dynamic lowering.

The change from power to dynamic lowering or vice versa when lowering is an inherent characteristic of the circuit. An emergency dynamic braking circuit is established when the master switch is brought to the neutral position.

Five steps of control are provided for both hoisting and lowering. A motor circuit and fused control circuit knife switch are provided on the control panel. By opening the motor circuit knife switch, the control circuit and contactor sequence can be checked without energizing the motor circuit. The plugging and accelerating relays must be blocked closed to check the contactor sequence. Motor circuit overcurrent protection is provided by one inverse time and one instantaneous overload relay. Low voltage protection prevents restarting of the motion after the low voltage relay is opened. When the power is interrupted by opening the main power supply switch, due to low voltage or an overload relay tripping, the master switch must be returned to the neutral position before the low voltage relay will close and the control panel becomes operative. The reversing contactors are mechanically and electrically interlocked.

When hoisting, the first three steps are controlled manually, directly from the master switch. The last two steps are controlled manually as well as automatically by the accelerating relays. The accelerating relays are controlled by a simple automatic scheme which is dependent on the motor armature voltage. This prevents high current surges when accelerating and also protects the mechanical parts from excessive shock. The first step hoisting is provided with an armature shunt to give good speed control under light loads.

ADJUSTMENT

230 VOLT REVERSING-PLUGGING CONTROL. The accelerating relays are adjusted at the factory to approximately the following values:

Relay	Volts to Close	Volts to Open
1AR	89	40-50
2AR	146	100-130
3AR	192	120-170

The PR relay coils PR1 and PR2 are connected so that they act cumulatively while the motor is accelerating and running. PR1 (the coil nearest the control panel) is the only coil used during the adjusting procedure of the PR relay. It is factory adjusted to close at about 200 volts and to open at about 100 volts.

230 VOLT HOIST DYNAMIC-LOWERING CONTROL. The accelerating relays are adjusted to approximately the following values:

Relay	Volts to close	Volts to Open
AR2	40	10-25
AR1	115	65-95

Toth 00631

DC VOLTAGE ACCELERATION AND PLUGGING CONTROL. On any particular crane installation the motors will most likely be loaded to a greater or lesser degree than the average. Therefore, improved performance may often be obtained by moderately changing these adjustments on the job site.

The DR relay should be adjusted to close just before the motor reverses during a plugging operation. For hoist control, relays AR1 and AR2, and for reversing-plugging control, relays 1AR, 2AR, and 3AR may be made to close earlier by reducing the air gap (A, Figure 5-8) or to close later by increasing the air gap.

The relay may also be made to close earlier by increasing the spring length (B) or later by decreasing the spring length. Generally, more positive relay operation will result with a stiff (short) spring and a wide air gap. It is best not to change the factory adjustment of the spring except in extreme cases.

CAUTION

NEVER turn the air gap adjusting screw down to the point where the adjusting screw can touch the relay coil retainer screw. Be sure the jam nut locks the adjusting screw.

When field adjustments are desirable, they should be made to obtain approximately equal motor current surges not exceeding 200 per cent on each control step. This results in the smoothest acceleration.

MAGNETORQUE CONTROL

DESCRIPTION

The MAGNETORQUE ® control is exactly what the word MAGNETORQUE implies, an electromagnet exerting torque on the motor to preload the motor, thereby utilizing the better part of the slip ring motor characteristics. The wound rotor induction motor, due to its inherent characteristics is the most desirable type for crane service. Since slip ring motors have poor speed regulation under no-load or light-load conditions, the motor tends to run at synchronous speed. Therefore, the MAGNETORQUE control incorporates a MAGNETORQUE unit (eddy current load brake) to preload the motor and to provide the speed control of a normally loaded motor without the use of a mechanical load brake.

The MAGNETORQUE unit is a device for transmitting torque by means of electromagnetic fields, therefore, there are no mechanical connections between the stationary and rotating members of the MAGNETORQUE unit. Figure 5-9 illustrates the MAGNETORQUE unit assembly. The stationary field member comprises a doughnut shaped coil, excited by low voltage direct current, encased in a circular

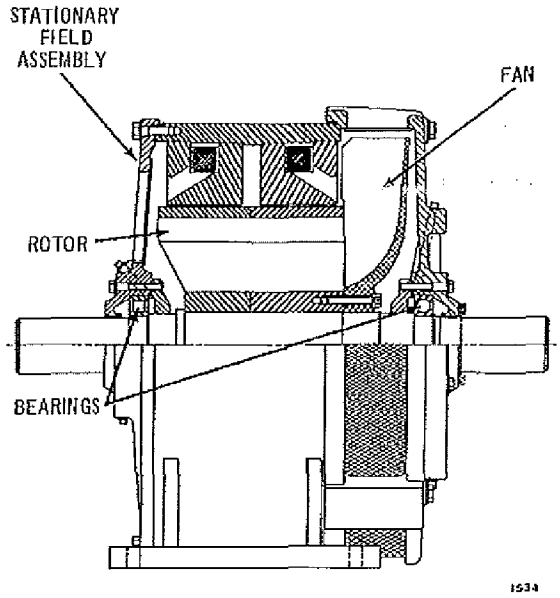

Figure 5-9. MAGNETORQUE Unit Assembly

magnet spider. The spider is arranged to provide a large number of alternate north and south magnetic poles. The rotating member, or rotor, is very light in weight for the horsepower.

The MAGNETORQUE unit should require very little attention, as the construction of the unit does not require any wearing parts.

The MAGNETORQUE unit is coupled to the hoist unit to rotate at motor speed. Since the field member is stationary and the rotor has no electrical connection, there are no moving electrical parts requiring maintenance. The braking torque is accomplished through magnetic lines of force between the stationary field member and rotor. Therefore, only magnetic lines are broken - the result - no wearing parts, no replacement of friction surfaces. Direct current excitation to the stationary field is obtained through a step-down transformer and a rectifier. MAGNETORQUE control results are achieved with the MAGNETORQUE unit exerting a torque resisting the driving torque of the motor. By properly matching the motor torque through secondary resistance, and the braking torque through resistance which controls the MAGNETORQUE unit excitation, the desired characteristics are obtained.

MAGNETORQUE control provides superior speed regulation over any other AC crane control and actually excels the control available with DC dynamic lowering control. In hoisting, all loads can be controlled at slow, medium, and high speeds. An outstanding feature of MAGNETORQUE control is the fact that it is impossible for the load to lower with the controller on any hoist position. Even on the first hoist control step, the load will always raise

Toth 00632

through the entire load range from no-load to 125 per cent of rated crane capacity. As there is only a 15 per cent change in speed from no-load to full-load on the first step of control, the hoist unit will gradually take the slack out of the sling and then smoothly raise the load. This is a very desirable feature and eliminates the necessity for inching or jogging. When heavy loads are only partially raised and then stopped, the load will not lower when hoisting motion is resumed, which is the case on all other electrical schemes including DC dynamic lowering.

In lowering, all loads can be lowered at slow, medium, and high speeds; this is true for overhauling as well as non-overhauling loads. Capacity loads can be lowered at 12 per cent of full load hoisting speed, which means accurate spotting of all loads, without the necessity of inching or jogging. MAGNETORQUE control insures positive hook action, no inadvertent lowering when hoisting is expected, and flat speed load characteristics on all lowering speed steps.

Off-position braking is a safety feature with MAGNETORQUE control. With the controller in the off-position, the MAGNETORQUE unit is excited at a reduced voltage. In case of electric motor brake failure, the load will overhaul the hoisting unit, but the MAGNETORQUE brake will exert a braking torque to slowly lower the overhauling load to the floor, thus, preventing a free falling load.

An additional safety feature can be incorporated with MAGNETORQUE control and is known as ALL POSITION BRAKING. This feature consists of an auxiliary permanent magnet alternator and rectifier, with an automatic switching means for excitation of the MAGNETORQUE unit. In case of simultaneous power and electric motor brake failure, the suspended load will overhaul the hoisting unit. In this case the alternator will automatically generate current and excite the MAGNETORQUE unit, thereby, retarding the overhauling load speed to approximately 40 per cent of full load speed. This safety feature is accomplished regardless of position of controller handle. The alternator is open circuited under normal operation and is only inserted when the mainline disconnect switch is open, or in case of power failure.

The ALL POSITION BRAKING feature is similar to the off-position dynamic braking as obtained with DC dynamic lowering control.

A series relay is connected in series with the MAGNETORQUE field circuit. This relay insures excitation on the MAGNETORQUE unit before the motor directional contactors H and L can close, except the last three hoisting and last lowering control steps, because in these steps the MAGNETORQUE brake is not excited. This insures positive safe control in case of an open circuit in the MAGNETORQUE unit. Failure of current in the MAGNETORQUE unit circuit will result in opening of series relay, automatically opening the directional contactor coil circuits, thereby, interrupting the motor and electric motor brake circuits.

ADJUSTMENT

GENERAL. The adjustment of MAGNETORQUE control is similar for both FULL MAGNETIC and MANUAL DRUM CONTROL. The only difference in these controls is the method of control and number of speed steps: full magnetic control having five (5) hoisting and five (5) lowering control speed steps, manual drum control having seven (7) hoisting and eight (8) lowering control speed steps. On full magnetic control, speed steps 2 and 4 hoisting and 2, 4 and 6 lowering are omitted from manual drum control.

All adjustment should be accomplished by varying the excitation current in the MAGNETORQUE unit. It should not be necessary to change the motor characteristics by changing the motor secondary resistance. Changing the motor secondary resistance may result in excessive motor current. Changing the motor characteristics or increasing the motor torque by changing the motor secondary resistance also necessitates increasing the excitation on the MAGNETORQUE unit and will also result in excessive heating of MAGNETORQUE unit. The motor secondary resistance should not be changed without first obtaining approval from the Harnischfeger Engineering Department.

For the best result the adjustments of the control should be made with loads ranging from 50 per cent to 100 percent of rated hoist capacity, preferably 100 percent load. Before proceeding with adjustment be sure that motor brake is properly adjusted and brake shoes are not dragging on wheel. Also check MAGNETORQUE unit series relay to be sure that relay armature pulls in at minimum brake excitation. Proceed with adjustment by checking the lowering speed on all lowering control steps. After establishing maximum MAGNETORQUE unit excitation the intermediate and low current should be approximately 65 per cent and 45 per cent of the maximum excitation current. Check the results with speeds for the corresponding load on the speed-load graph, Figure 5-10. The speed in the various steps should be within 3 per cent to 8 per cent of the speeds on the graph for a given load and speed. The speed on the various control steps should be within 3 per cent plus or minus at no load, and within 8 per cent plus or minus at full load. For example step 3 lowering manual drum control the no load graph speed is 12 per cent of synchronous motor speed, a deviation of 9 per cent to 15 per cent speed is allowed at this point. At 100 per cent load the graph speed is 34 per cent of synchronous motor speed, a deviation of 26 per cent to 42 per cent speed is allowed at this point. The variations from the graph should all be in the same direction, in other words if the speed is high in a certain step the speed in all steps must either fall on the graph or to the high side. If the speeds obtained are in excess of the graph speeds, increase the torque on the MAGNETORQUE unit by

Toth 00633

shorting out resistance in the circuit. If the speed obtained is slower than graph speeds, reduce the torque on the MAGNETORQUE unit by increasing the resistance in the circuit.

A supply voltage variation will affect the adjustment and change the speed load characteristics. An increase in supply voltage after adjustments are made will increase the speed and a decrease will reduce the speed on all MAGNETORQUE control steps, in fact on all control steps. The MAGNETORQUE unit should be set with normal operating voltage.

MAGNETIC CONTROL. For full magnetic control step 1 hoisting has maximum MAGNETORQUE unit excitation, step 2 has a reduced excitation and on steps 3, 4 and 5 the MAGNETORQUE unit circuit is open. In lowering steps 1, 2 and 3 have maximum excitation on the MAGNETORQUE unit, step 4 has a reduced excitation and on step 5 the MAGNETORQUE unit circuit is open.

The MAGNETORQUE unit excitation in step 1 HOIST and steps 1, 2, and 3 LOWER are identical and the excitation is governed by the resistance between M13 for the main hoist, M14 for the auxiliary hoist and R60. The excitation in step 2 HOIST and step 4 LOWER are identical, and is governed by the resistance between R60 and R61. Decreasing the resistance between M13 or M14 and R60 will increase the MAGNETORQUE unit excitation and decrease the hoisting and lowering speeds in step 1 HOIST and steps 1, 2, and 3 LOWER. Decreasing the resistance between R60 and R61 will increase the MAGNETORQUE unit excitation and decrease the hoisting and lowering speeds in step 2 HOIST and step 4 LOWER. Increasing the resistance will have the opposite results, increasing the speed in the same corresponding steps. The speeds in steps 3, 4, and 5 HOIST and step 5 LOWER should be checked, but should not require any adjustment.

MANUAL DRUM CONTROL. For manual control steps 1 and 2 hoisting have maximum MAGNETORQUE unit excitation, step 3 has an intermediate reduced excitation, step 4 has low excitation, and on steps 5, 6 and 7 the MAGNETORQUE unit circuit is open. There are actually 8 hoist control steps, steps 7 and 8 being identical. In lowering steps 1, 2, 3, 4, 5 and 6, maximum excitation is on the MAGNETORQUE unit, step 7 has an intermediate reduced excitation and in step 8 the MAGNETORQUE unit circuit is open. The MAGNETORQUE unit excitation in steps 1 and 2 hoisting and steps 1, 2, 3, 4, 5 and 6 lowering are identical and excitation is governed by resistance M13 for main hoist, M14 for auxiliary hoist and R60. The excitation in step 3 hoisting and step 7 lowering are identical and governed by the resistance between R60 and R61. The excitation in step 4 hoisting is governed by the resistance between R61 and R62. Decreasing the resistance between M13 main hoist or M14 auxiliary hoist and R60 will increase the MAGNETORQUE unit excitation and decrease the hoist and lowering speeds in steps 1 and 2 hoist and steps 1, 2, 3, 4, 5 and 6 lower. Decreasing the resistance between R60 and R61 will increase the MAGNETORQUE unit excitation and decrease the hoisting and lowering speeds in step 3 hoist and step 7 lower. Decreasing the resistance between R61 and R62 will only affect step 4 hoist reducing the speed in this step. Increasing the resistance will have the opposite results, increasing the speed in the same corresponding steps. The speeds in steps 5, 6 and 7 hoist and step 8 lower should be checked, but should not require any adjustment.

Before making adjustments check the MAGNETORQUE unit air-gap and be absolutely sure that same is fairly uniform.

CHECKING AND ADJUSTMENT PROCEDURE. Make the adjustments with load of 50 per cent to 100 per cent of rated capacity. The weight of load should be checked so that actual weight is known and no false adjustments are made. It is only necessary to adjust the speed with one load, the speed-load characteristics for all other loads should follow the graph fairly close. The adjustments should be made for the lowering operation. Adjust the MAGNETORQUE unit excitation so that the speeds, lowering, conform with speeds on speed-load curves, Figures 5-10 or 5-11. Increase or decrease the resistance between M13 or M14 depending on main or auxiliary hoist and R60 to obtain the speeds in steps 1, 2, and 3, full magnetic, or 1, 2, 3, 4, 5 and 6, manual drum control to correspond with the speeds on the corresponding step and load on the speed-load curves. Increase or decrease the resistance between R60 and R61 to obtain the speed in step 4 full magnetic or 7 manual drum control to correspond with the corresponding speed, and load on the speed-load curves, Figures 5-10 or 5-11.

After completing adjustment for lowering operation check hoisting speeds with the same load. The only step hoisting which can be varied without changing adjustment for lowering is step four (4) manual drum control only. The speed in this step can be increased or decreased by increasing or decreasing the resistance between R61 and R62. After completing adjustment for lowering it should not be necessary to make any adjustments for hoisting steps as the speeds for these steps should be fairly close to the corresponding steps on the speed-load curves. A slight variation of 3 per cent to 8 per cent speed in the actual speed as previously explained, with the corresponding speed-load curve, due to variation in MAGNETORQUE unit characteristics can be expected. The speeds on steps 3, 4 and 5 hoist and 5 lower full magnetic, or 5, 6, and 7 hoist

Toth 00634

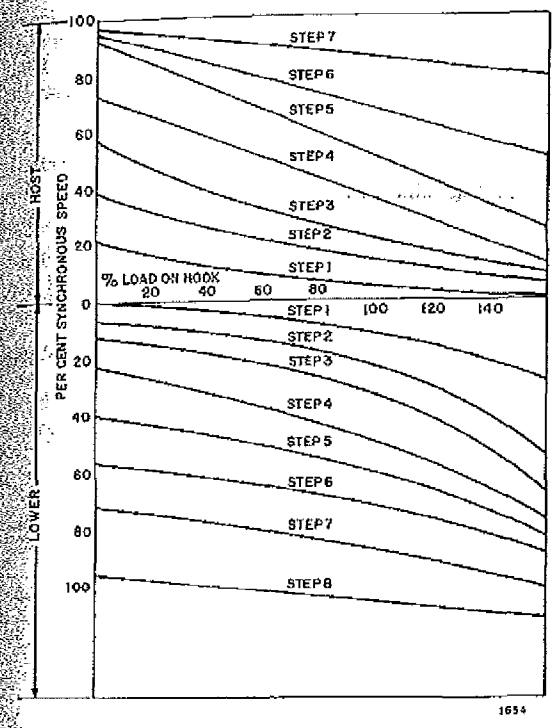

Figure 5-10. Manual Drum Control Speed - Load Curves

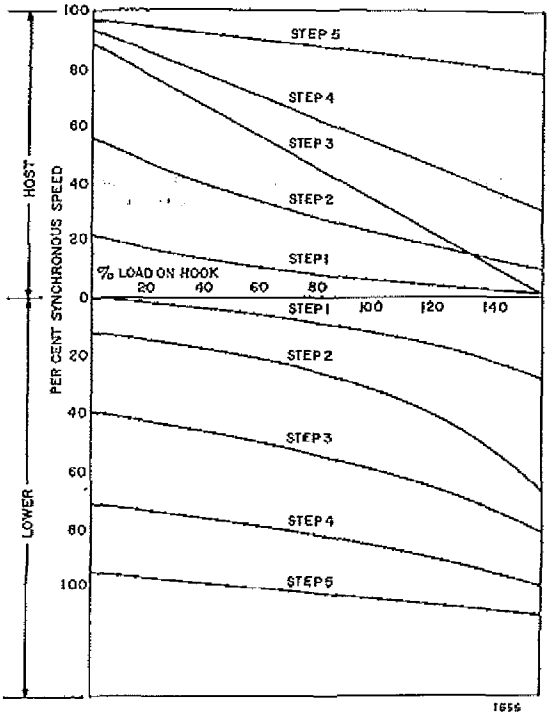

Figure 5-11. Full Magnetic Control Speed - Load Curves

and 8 lower manual drum control should be checked, but should not require any adjustment as there is no MAGNETORQUE unit excitation on these steps.

After completing the adjustment with a load, remove the load and check the speeds under no-load conditions in all control steps. These speeds should be fairly close to those on the characteristic curve. A record should be kept of the weight of the load used, motor speed, and MAGNETORQUE unit current, in all control steps hoisting and lowering both with load and no load.

MAGNETORQUE SERIES RELAY ADJUSTMENT. The MAGNETORQUE series relay is a protective device that insures excitation on the MAGNETORQUE unit before the motor or motor brake circuit can be energized.

Adjust the magnetic air gap (A, Figure 5-8) by turning the adjusting screw so the relay pulls in and closes the contacts at the lowest MAGNETORQUE excitation. Always maintain a slight air gap so that the relay will drop out quickly when the MAGNETORQUE circuit is de-energized.

Adjust spring length (B) to allow sufficient compression for quick opening of the contacts when the MAGNETORQUE circuit is de-energized. This spring adjustment must also be balanced with the air gap adjustment so that it will not interfere with the relay closing at the lowest MAGNETORQUE excitation.

Be sure the jam nut locks the adjusting screw securely.

CONTROL COMPONENTS

CONTACTORS

GENERAL. All contactors are equipped with large forged copper silver plated contacts and powerful blowout coils.

The operating magnet structure and coils are designed for direct current operation, thereby eliminating the troubles with laminated cores. For alternating current applications a rectifier is used to supply direct current.

The stationary contacts are rigidly mounted on heavy copper posts with milled seats.

The movable contacts are rigidly mounted on the low inertia movable contact holder, precision molded of aluminum alloy with a milled seat.

Toth 00635

The contacts are arranged for a rolling, self-cleaning action, striking first at the top then rolling to a stop at the bottom of the contact where no arcing occurs.

The operating magnet armature of the Type A and B contactors are precision casted of aluminum alloy with a soft steel insert. The Type AA operating magnet armature is made of low carbon steel, which is formed and machined.

The armatures, movable contact holders, and contact arms are balanced to virtually eliminate contact bounce.

The type A contactors are single pole with normally open contacts. The type B contactors are single pole with normally closed contacts. The type AA contactors are available in two, three, or four pole arrangements with normally open contacts. The last digit in the type number designates the number of contacts.

Both normally open and normally closed electrical interlocks are available. Reversing contactors are mechanically interlocked.

TYPE A CONTACTOR MAINTENANCE. Oil impregnated bearings are used at the pivot points of the contactor. These do not require lubrication.

The arc gap "B" and magnetic gaps "C" and "D" are factory adjusted and no provisions are made for adjustment. See Figures 5-13 through 5-15. Variation from Table 5-3 indicate wear in the operating parts.

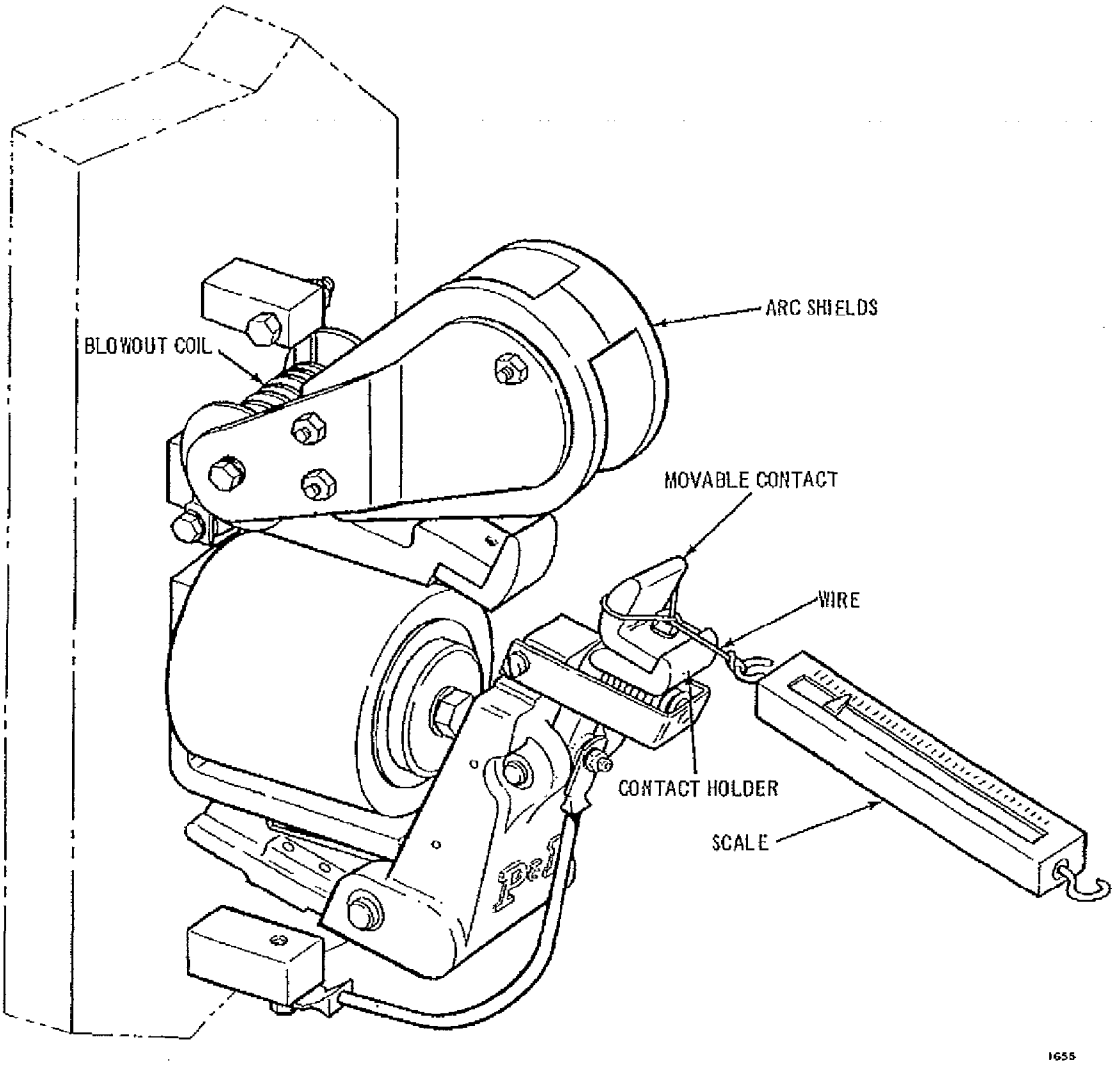

Figure 5-12. Checking Initial Contact Pressure

Toth 00636

Table 5-3. Contactor Tolerances

Type	Contact Pressure (Pounds) At Center Of Contact Tips		Arc Gap "B" (Inches) With New Contact Tips	Magnetic Gap "C" (Inches) At Center Of Magnet Core	Magnetic Gap "D" (Inches)		MIM. THICKNESS Per Contact Tip
	Initial Pressure Contacts Open	Final Pressure Contacts Sealed			Contacts Sealed	Contacts Open	
A-100	3.0 ± 5 oz	4.5 ± 6.5 oz	5/8 ± 1/32	15/32 ± 1/64	1/32		3/8"
A-300	6.2 ± 9.5 oz	10.0 ± 1 lb	13/16 ± 1/32	5/8 ± 1/64	1/32		7/16"
A-600	9.0 ± 14.5 oz	16.0 ± 1 lb 9 oz	15/16 ± 3/64	23/32 ± 1/32	1/32		1/2"
B-100	3.0 ± 5 oz	4.5 ± 6.5 oz	7/16 ± 1/32	33/64 ± 1/64		1/32	3/8"
B-300	6.2 ± 9.5 oz	10.0 ± 1 lb	17/32 ± 1/32	5/8 ± 1/64		1/32	7/16"
AA-102 AA-103 AA-104	3.0 ± 5 oz	4.5 ± 6.5 oz	1/2 ± 1/32	1/2 ± 1/64	1/32		3/8"
AA-302 AA-303 AA-304	6.2 ± 9.5 oz	10.0 ± 1 lb	11/16 ± 1/32	21/32 ± 1/64	1/16		7/16"

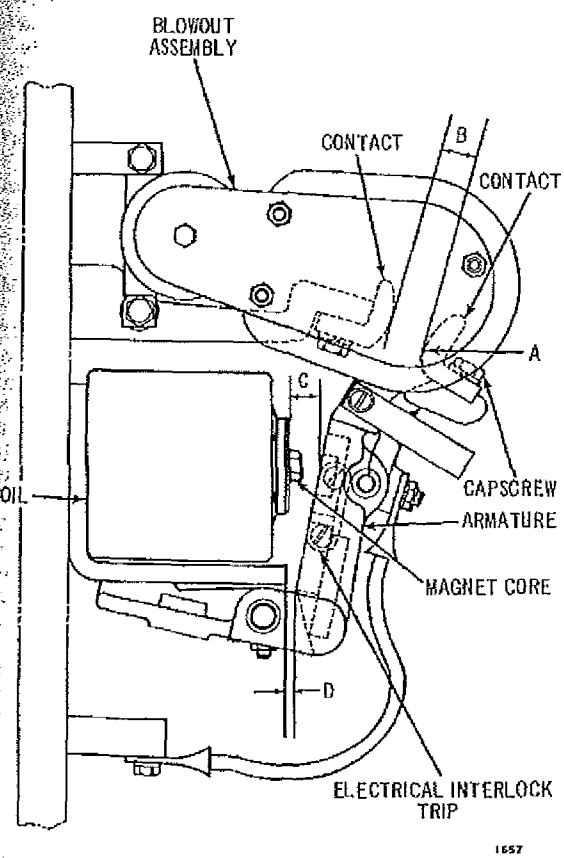

Figure 5-13. Type "A" Contactor

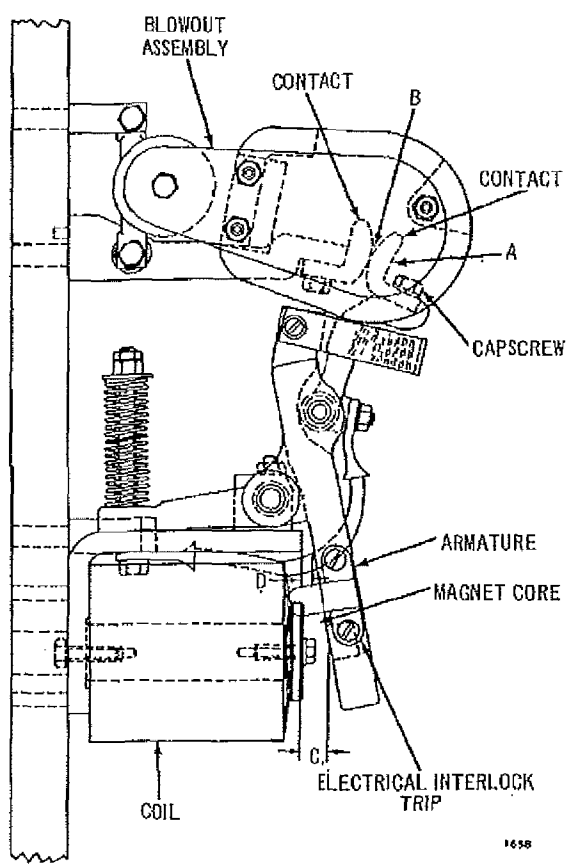

Figure 5-14. Type "B" Contactor

Toth 00637

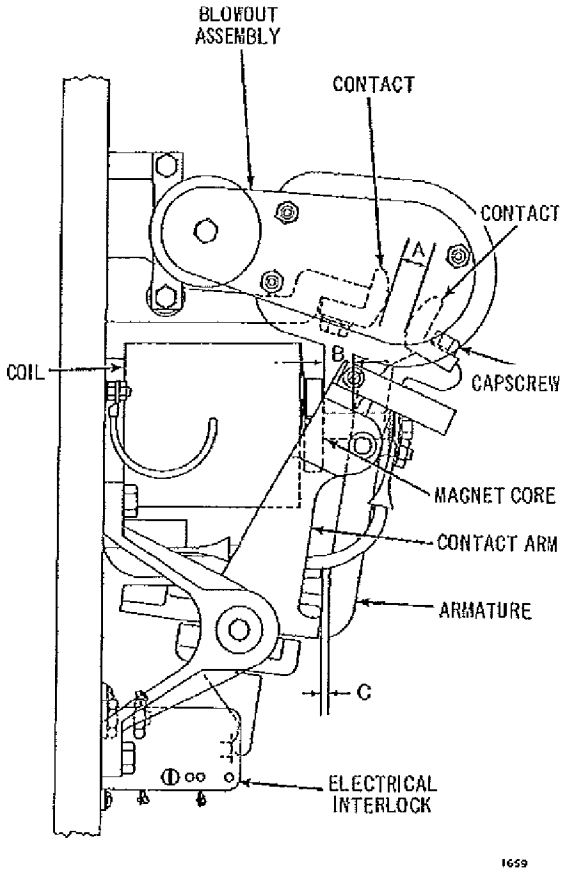

Figure 5-15. Type "AA" Contactor

For proper operation the worn parts should be replaced.

The contacts should be replaced when they are worn to one-half the original thickness at the contact surface.

Check the initial contact pressure by looping a piece of wire or string around the movable contact at the center of the contact face as shown in Figure 5-12. With the contacts open as shown, fasten a spring scale to the wire or string, pull on the scale and take a scale reading just as the contact holder moves.

The final contact pressure must be checked when new contacts are installed. Use the same general procedure as described above for initial contact pressure, except that the contactor must be closed manually. Take scale reading just as the contact opens.

Initial and final contact pressures should be maintained within the tolerances specified in Table 5-3.

CAUTION

Always be sure the arc shields on the blowout assembly are down and in proper position after checking contactors.

TYPE B CONTACTOR MAINTENANCE. Oil impregnated bearings are used at the pivot points for the armature and movable contact holder. These do not require lubrication.

The arc gap "B" and magnetic gaps "C" and "D" are factory assembled and no provision is made for adjustment. Variations from Table 5-3 indicates wear in the operating parts. For proper operation worn parts should be replaced.

The contacts should be replaced when worn to one half the original thickness at contact surface.

Check initial contact pressure by looping a piece of wire or string around the movable contact at center of contact face as shown in Figure 5-12. Manually open the contacts and fasten a spring scale to the wire or string and pull scale, taking scale reading just as contact holder moves. The final contact pressure must be checked with new contacts. Use same general procedure as above for initial pressure except that the contact must be kept closed manually to prevent armature movement. Take scale reading just as contacts open.

Initial and final contact pressures should be maintained within tolerances specified in Table 5-3.

CAUTION

Always be sure the arc shields on the blowout assembly are down and in proper position after checking contactors.

TYPE AA CONTACTOR MAINTENANCE. Oil impregnated bearings are used at the pivot points for the main hinge bearings and movable contact holders. The main hinge bearings are rubber cushioned to provide resiliency for self alignment and to absorb shock. These bearings do not require lubrication.

The arc gap "B" and magnetic gaps "C" and "D" are factory assembled. These should not require adjustment for the life of the contactor. Variations from Table 5-3 usually indicate wear in the operating parts. For proper operation worn parts should be replaced. The arc gap "B" and magnetic gap "C" can be changed by changing the position of the contact arms and armature on the shaft. This can be done by loosening and tightening of the bolts in the clamps. This adjustment must only be made with new contacts to insure proper gaps.

The contacts should be replaced when worn to one half the original thickness at contact surface.

Toth 00638

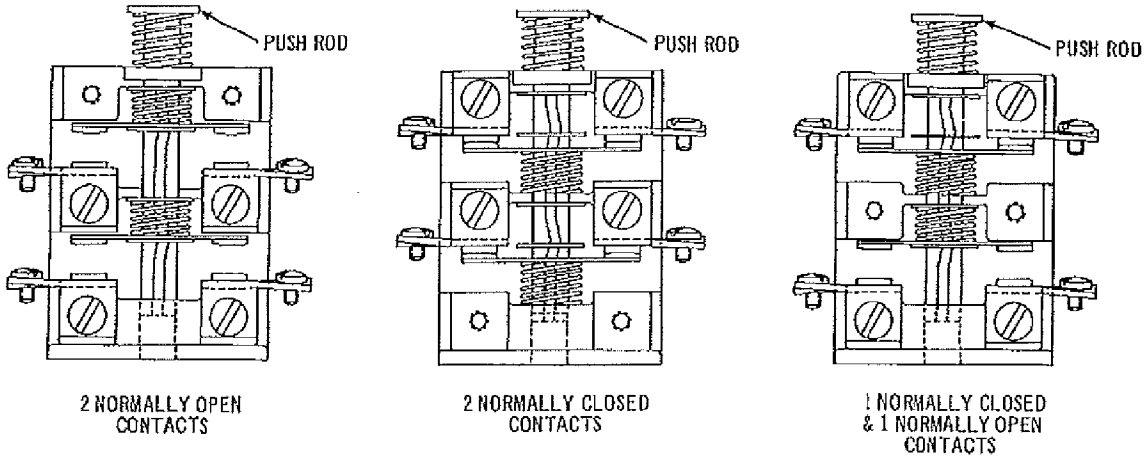

Figure 5-16. Electrical Interlock

Check initial contact pressure by looping a piece of wire or string around the movable contact at center of contact face as shown in Figure 5-12. With contacts open as shown in Figure 5-15, fasten a spring scale to the wire or string and pull scale taking scale reading just as contact holder moves or is just free from contact arm seat.

The final contact pressure must be checked with new contacts. Use same general procedure as above for initial pressure except manually close the contactor. Take scale reading just as contacts open.

Initial and final contact pressures should be maintained within tolerances specified in Table 5-3.

INTERLOCKS

ELECTRICAL INTERLOCKS. The electrical interlocks used with the type A, B and AA contactors are self-contained units. They are mounted on the contactor panel by a mounting bracket and actuated by a trip arm mounted on the contactor armature. The electrical interlock assembly consists of two separate sets of contacts. See Figure 5-16.

The electrical interlock housing is a bakelite molding. The stationary and movable contacts have silver alloy tips. The stationary contacts are mounted in the housing. The movable contacts are mounted on a nylon molded push rod. By rearranging the contacts and springs the assembly can offer two normally open, or two normally closed, or one normally open and one normally closed contact arrangements.

The contacts are actuated by the contactor trip arm contacting the interlock push rod.

MECHANICAL INTERLOCK. The mechanical interlock used with the type A and AA reversing contactor is a self-contained unit. They are mounted directly on the contactor panel. Clearance in the panel holes for mounting provide adjustment for proper operation. The interlock is actuated by the armature tail piece on the type A contactors and the inside movable contact arm tail piece on the type AA contactors. See Figure 5-17.

The mechanical interlock has two bakelite molded cam levers mounted and hinged on a common bolt. A cam follower is mounted on a separate bolt. Two nylon rollers on the cam follower contact the cam levers to provide the interlocking. A torsion spring returns and holds the cam follower in the neutral position. The two bolts supporting the cam levers and cam follower provide a pivot for these members and also a means of securing the interlock to the panel.

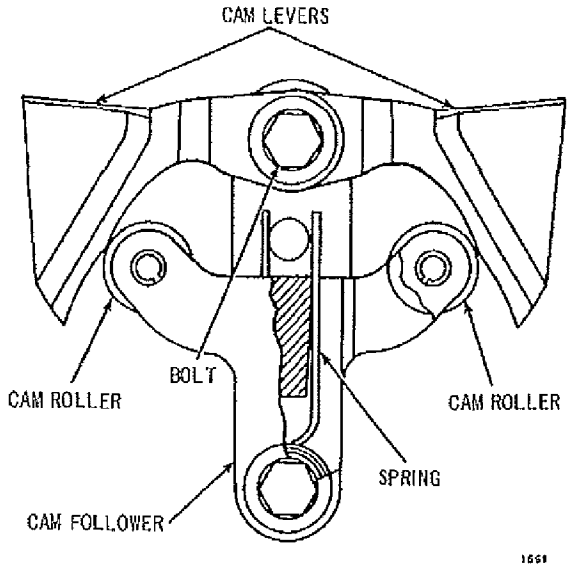

Figure 5-17. Mechanical Interlock

Toth 00639

When one of the contactors on a reversing contactor panel is energized the tail piece contacts the interlock cam lever. The lever is rotated about its pivot point. This in turn rotates the cam follower bracket. When the contactor is completely sealed and the tail piece is at maximum travel, the opposite side cam lever interlocks the other reversing contactor.

RESISTORS

GENERAL. The type of resistors generally used on AC and DC cranes are either cast grid, wire wound or stamped steel. The crane service and motor horsepower determine which of the three resistors to use.

Resistor classifications are selected on the basis of the crane service requirements and duty cycle.

The cast grid, wire wound and stamped steel resistors have these characteristics in common:

1. Relatively constant resistance value regardless of temperature changes.

2. Good air circulation providing fast heat dissipation.

3. Fast and simple replacement of individual grids.

4. Can withstand severe vibrations.

5. Positive grip connecting lugs for external wires.

The resistors may be installed in a resistance rack making it possible to remove one individual resistor bank or box without disturbing the remaining resistor banks.

INSPECTION. The following items should be checked periodically:

1. Check all resistor connections for tightness.

2. Check the rod bolts on the resistor end plates for tightness.

3. Check the contact surfaces of the resistor grids for breaks, burns or pitting.

4. Check the jumpers used on wire wound resistors and the outgoing connection for tightness.

If any of the above conditions exist, take corrective action to eliminate all of the deficiencies. Be careful not to deform the resistance units.

CAST GRID RESISTORS. The cast grid resistors are made of an alloy cast iron. The grids (Figure 5-18) are mounted on mica insulated rods and stacked between heavy pressed steel end plates. Clamp type terminals are used on the cast grid resistors. Mica tubes and washers provide insulation for the grids and high temperature insulation bushings insulate the rods from the end plates.

The smaller grid size (sizes A, B, C, and 2101 to 2106 inclusive) can be removed by loosening the mounting rod bolts and slipping the grids out. To remove the larger grid sizes (2107 to 2111 inclusive) the grid box must be disassembled and then remove the mounting rod bolts with the mica tube.

WIRE WOUND RESISTOR. The wire wound resistors (Figure 5-19) are used with smaller horsepower motors where a high resistance and low current is required. The wire wound resistors use a special resistance wire wound around porcelain cores. The

Table 5-4. Classification of Resistors

Approx. Per Cent of Full Load Current on First Point	Class Numbers Applying to Duty Cycles				
	15 Sec. On Out of Each 90 Sec.	15 Sec. On Out of Each 60 Sec.	15 Sec. On Out of Each 45 Sec.	15 Sec. On Out of Each 30 Sec.	Continuous Duty
25	141	151	161	171	91
50	142	152	162	172	92
70	143	153	163	173	93
100	144	154	164	174	94
150	145	155	165	175	95
200 or Over	146	156	166	176	96

NOTE: For crane application select resistors at 50 per cent of full load current on first point.

Toth 00640

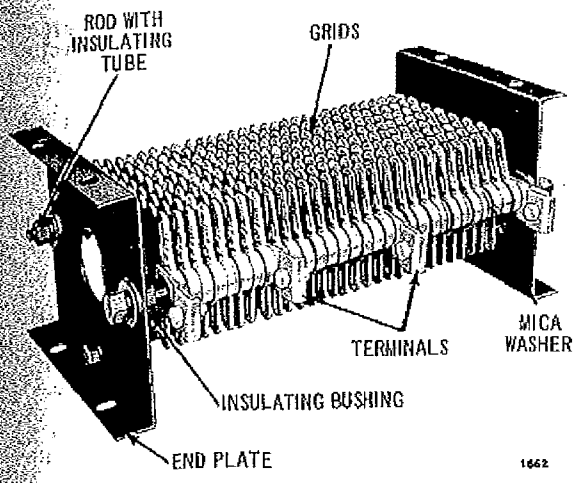

Figure 5-18. Cast Grid Resistor

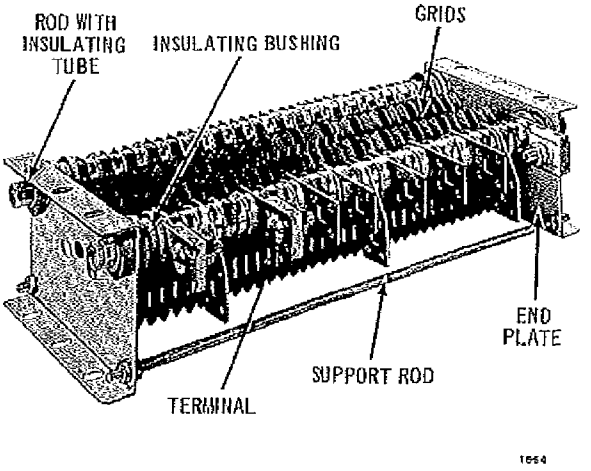

Figure 5-20. Stamped Steel Plate Resistor

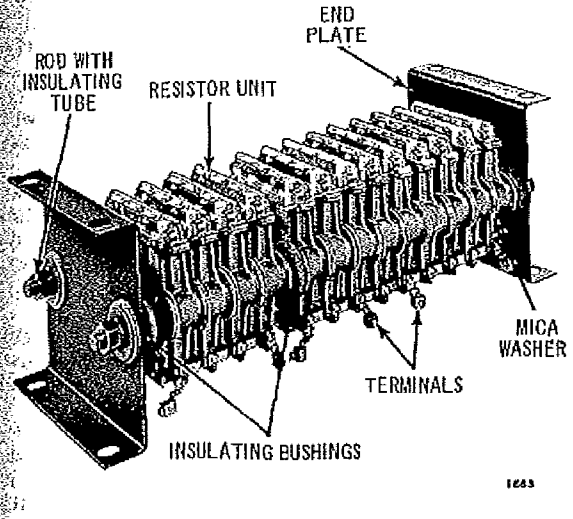

Figure 5-19. Wire Wound Resistor

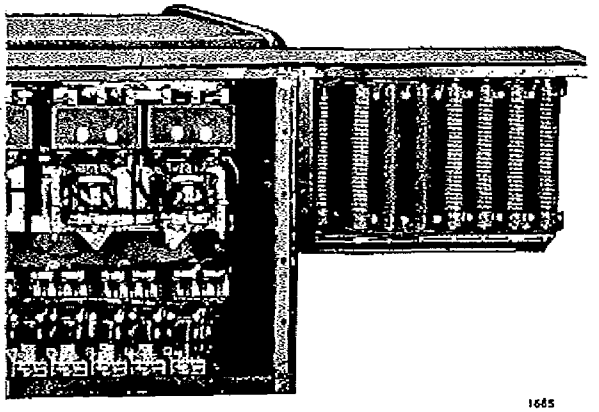

Figure 5-21. Edge Wound Resistor Assembly

cores are spiral grooved to prevent adjacent turns from touching and shorting out. The cores with the coils are then assembled on aluminum frames to form a resistor unit.

The resistor units are mounted on mica insulated rods and stacked between pressed steel end plates. Solderless terminals are used for the external connections.

The resistor units can be replaced by removing the mounting rods and insulating tubes. Mica tubes and washers provide insulation for the resistor units and high temperature insulating bushings insulate the rods from the end plates.

STAMPED STEEL PLATE RESISTORS. The stamped steel plate resistors (Figure 5-20) use grids made of a special stainless steel which is non-breakable and highly resistant to corrosion.

EDGEWOUND RESISTORS. The edgewound resistor unit (Figure 5-21) is a ribbon edge wound on a ceramic tube and fired over with a vitreous enamel.

The units are supported in a frame by shoulder washers and through bolts.

CONTROLLERS

MANUAL DRUM CONTROLLER. The manual drum controller controls the motor for the various crane motions directly. It starts, stops, and reverses the motion, and also provide speed regulation. A modified version of the control is the Semi-Magnetic Control which includes reversing contactors.

The operating head can be either a straight line lever, an under lever or a radial (crank) lever. For floor control the head is provided with a spring return rope operated sheave wheel. See Figure 5-22.

Toth 00641

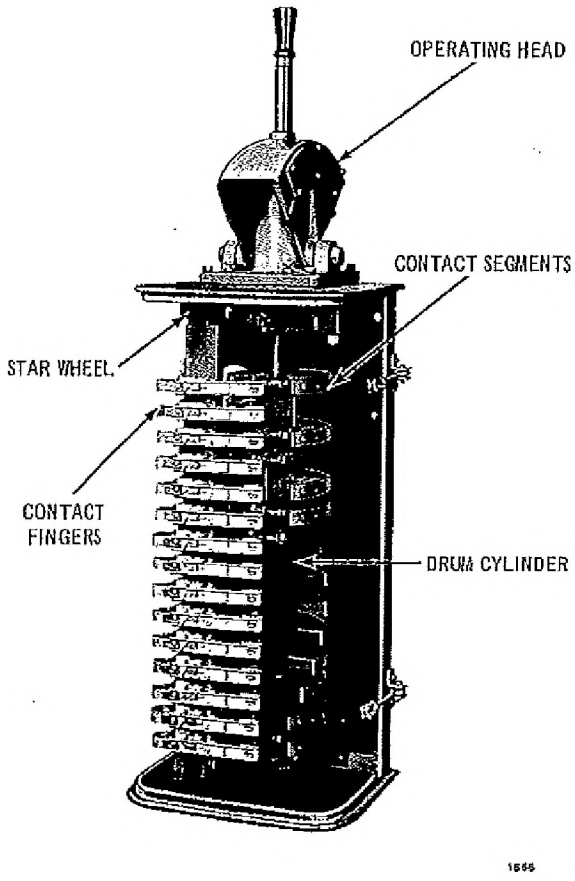

Figure 5-22. Manual Drum Controller

The drum cylinders are mounted on a square shaft, insulated with impregnated fibre angles. The fibre angles are placed on the shaft so as to provide ample insulation. Formed copper segments are mounted on the drum cylinder. The longer copper segments have leader segments. The leader segments are used for maintenance purposes, so it is only necessary to replace a short segment when the contact end is burned from making and breaking the motor circuit. A position indicating starwheel is also mounted on the drum shaft. The complete drum cylinder and shaft assembly can be removed through the bearing plate at the lever end.

The contact fingers consist of forged copper tips riveted to steel fingers. These tips are removable and replaceable. A flexible copper shunt is provided between the contact finger and outgoing connection. The fingers are adjustable for wear. Keep the fingers adjusted to allow for 1/16 of an inch of movement between the finger tip and drum segment. The adjustment is maintained by a set screw. A flat spring resting against the sides of the set screw head prevents the set screw from turning during controller operation.

For alternating current the controller is provided with arc shields between part or all of the controller fingers.

For direct current the controller is provided with arc shields and magnetic blowout coils to quickly extinguish and confine the arc.

For small horsepower AC and DC motors, arc shields and blowout coils are not used.

NOTE

Always advance the controller slowly. Never throw the controller to the full ON position without giving the motor time to accelerate.

The following parts of the controller should be inspected and the maintenance indicated should be performed:

1. Lubricate the pivot points.

2. Inspect the finger tips and contact segments. If pitted, smooth with a fine file or sandpaper. If dirty, clean with electrical cleaning solvent.

3. Lubricate the fingers and contact segments with clean petroleum jelly. Never use oil or grease.

4. Operate the controller. Adjust the spring tension at the starwheel latch for proper feel of controller steps.

5. Replace all the damaged arc shields.

6. When it is necessary to replace the blowout coil on a direct current controller be sure that the blowout coil replacement is connected to give the proper polarity.

7. When ordering separate contact segments, list the piece number stamped on the contact segment. If no piece number is stamped on the contact segment, list the following information:

A. The distance from tip to tip of the inside arc (A, Figure 5-23).

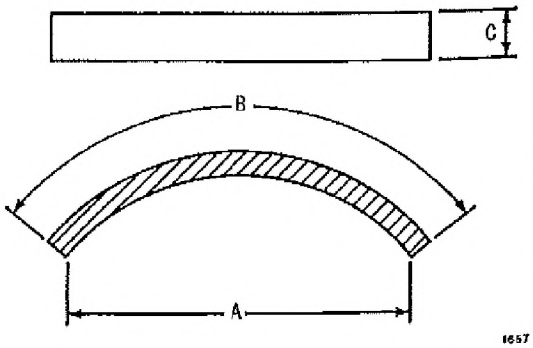

Figure 5-23. Controller Segment Diagram

Toth 00642

B. The distance from tip to tip, around arc (B).

C. The width of the segment (C).

The fingers are adjusted by turning the set screw until the finger tip is lifted by the contact segment 1/16 of an inch. See Figure 5-24.

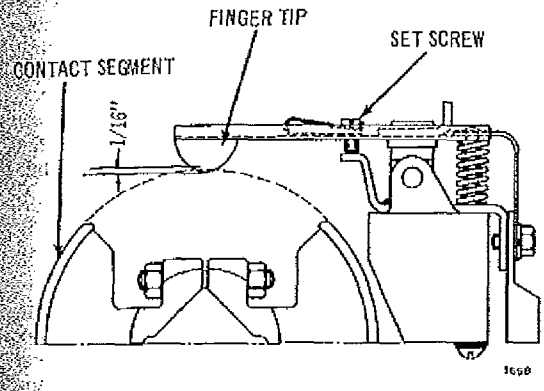

Figure 5-24. Finger Adjustment

CAM OPERATED CONTROLLERS. Two types of cam operated controllers are used for crane control. The cam operated controllers are illustrated in Figures 5-25 and 5-26. Both of the controllers operate in a similiar manner, that is, they are actuated by molded cams mounted on a single shaft. The shaft is rotated by the controller lever. The difference between the two controllers is the manner in which the shaft is rotated, the type of contacts and the size of the units.

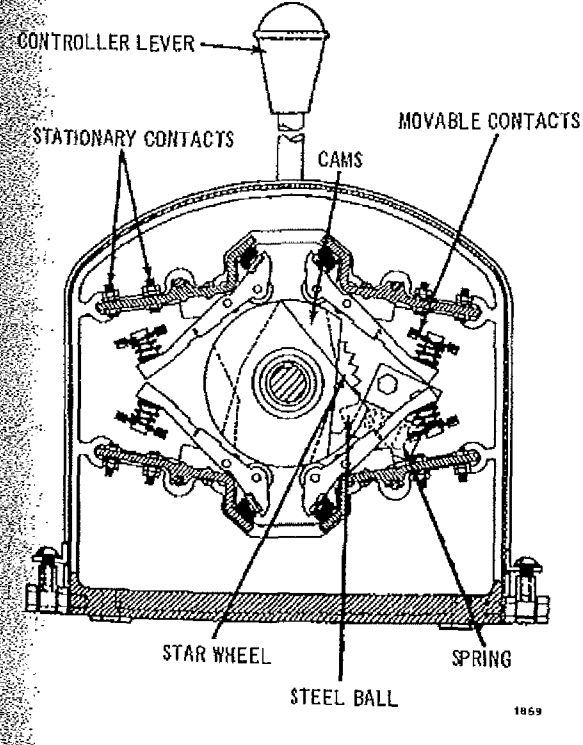

Figure 5-25. Cam Operated Controller

The controller illustrated in Figure 5-25 is the larger of the two controllers and is actuated by molded cams mounted on a horizontal shaft coupled directly to the controller lever. The cams are arranged so that the contacts are closed in a predetermined sequence. The movable contacts are mounted on contact levers, which are hinged to the stationary contact moldings. A roller type cam follower is held against the cam by a spring between the contact lever and stationary contact molding. The

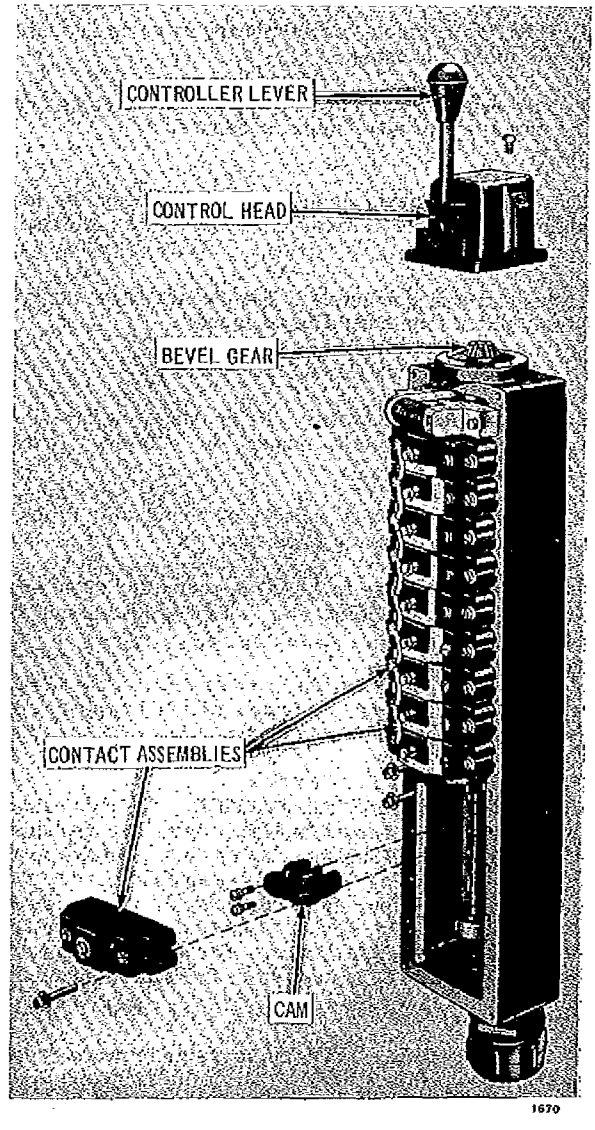

Figure 5-26. Cam Operated Controller

Toth 00643

movable contacts have tips on each side of the contact bridge and can be turned over for increased contact life. Control position indication is given by a hardened steel starwheel in contact with a spring pressurized steel ball.

The controller illustrated in Figure 5-26 is a miniaturized version of the controller illustrated in Figure 5-25. The operation of this controller is basically the same as the operation of the larger controller, with the following exceptions:

1. The shaft that the cams are mounted on is vertical.

2. The shaft is rotated by bevel gears in the control head.

3. Both the movable and stationary contacts are in a single molded housing.

4. The contacts are normally open and are closed by the cams in a predetermined sequence.

The following parts of the controller should be inspected and the maintenance performed as indicated:

1. Inspect the contacts. If the contacts are excessively pitted they should be replaced.

2. Inspect the cams for excessive wear.

3. Operate the controller. If the steps of the controller cannot be felt, inspect the starwheel, ball, and spring.

4. Inspect the contact support or housing for cracks or defects, and replace if necessary.

5. The ball bearings in the large controller should be lubricated periodically with a high grade of multipurpose grease.

6. The bevel gears in the control head of the small controller should be lubricated with a high grade of multipurpose grease periodically.

PUSHBUTTON CONTROL STATION. The pushbutton control station is used for floor controlled operation of the crane. The pushbuttons are housed in a weather-proof case which is suspended from the crane. The number of pushbuttons in the station is determined by the number of motion to be controlled from the pushbutton station. Three types of pushbuttons are used, depending on the type of control.

The single speed pushbutton is a simple make-break switch. When this type of button is used, only one speed can be obtained from the motion. The speed of the motion is unaffected by the amount of pressure used to depress the button.

For two speed control, a three contact pushbutton is used. Partially depressing the pushbutton closes the direction and low speed circuits. Fully depressing the button opens the low speed circuit and closes the high speed circuit.

For the five step variable speed control, a five step pushbutton is used. Initial depression of the pushbutton closes the direction circuit. Progressively depressing the button in increments of approximately one-eighth inch actuates additional accelerating contactors. The accelerating contactors short resistance out of the motor circuit and motor speed increases.

All the pushbuttons are of the "Dead Man" type, that is they have a spring in the button to return the button to the OFF position when it is released.

JOY STICK CONTROL UNIT

GENERAL. The joy stick is a means of operating two controllers with one control lever. Two versions of the joy stick are used with the different types of controllers. The operation and maintenance of both joy sticks is described in the following paragraphs.

TYPE I JOY STICK. As illustrated in Figure 5-27, the operating mechanism consists of two yokes mounted at right angles to each other. A gear segment is fastened to each yoke and is meshed with the pinion on the coupling shaft, which transmits the motion to the controller. The operator's lever passes through a slot in the center of each yoke. As the operator moves the lever in one direction, the lever causes one of the yokes to swing in an arc, while the lever moves along the slot in the other yoke. Diagonal movement of the lever causes both yokes to move simultaneously.

Adjusting screws and locknuts are provided on the top of the unit. These provide stops to prevent an over travel of the controller in the full ON position.

The gear segments in the unit should be lubricated periodically with a high grade of multipurpose grease.

TYPE II JOY STICK. The operation of the Type II joy stick is as follows: See Figure 5-28.

1. Movement of the joy stick handle from left to right, as viewed from the operator's seat, causes the bevel gear to rotate. The movement of the bevel gear rotates another bevel gear attached to the controller. The speed of the motion is determined by the amount of handle movement from the centered OFF position.

2. Movement of the joy stick handle from front to back, as viewed from the operator's seat, causes the handle gear to move the round rack gear back and forth. The back and forth movement of the round

Toth 00644

rack gear causes the rack gear to move back and forth, and rotates the gear attached to the controller. The speed of the motion is determined by the amount of handle movement from the centered OFF position.

3. Diagonal movement of the joy stick handle will cause the bevel gear and rack gear to actuate their individual controllers, which in turn actuate their respective motions. The speed of the two motions will depend on the amount of handle movement in a diagonal direction from the centered OFF position. Should the handle be moved more to the left or right, in relation to the front and back movement, the controller actuated by the bevel gear will be more ON than the controller actuated by the rack gear.

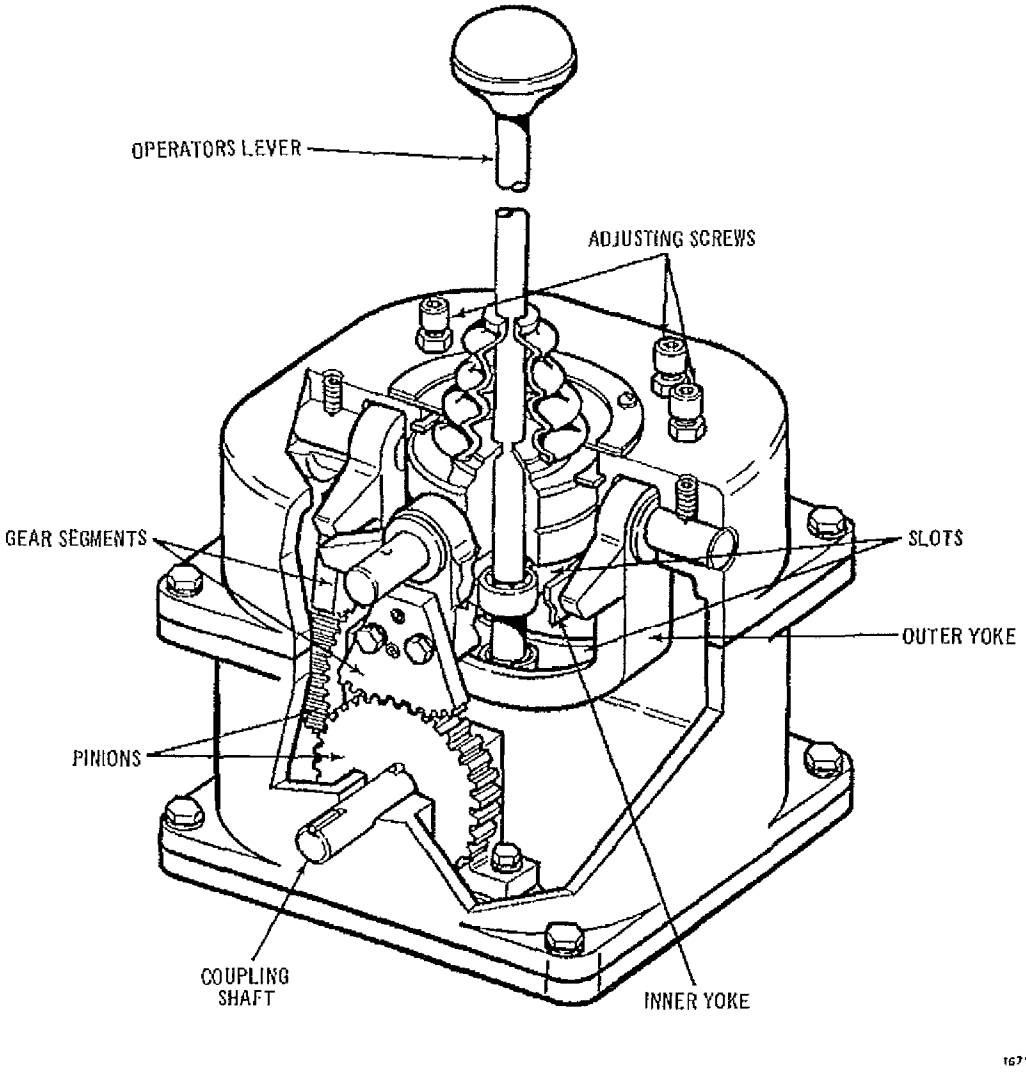

Figure 5-27. Type I Joy Stick Control Unit

Toth 00645

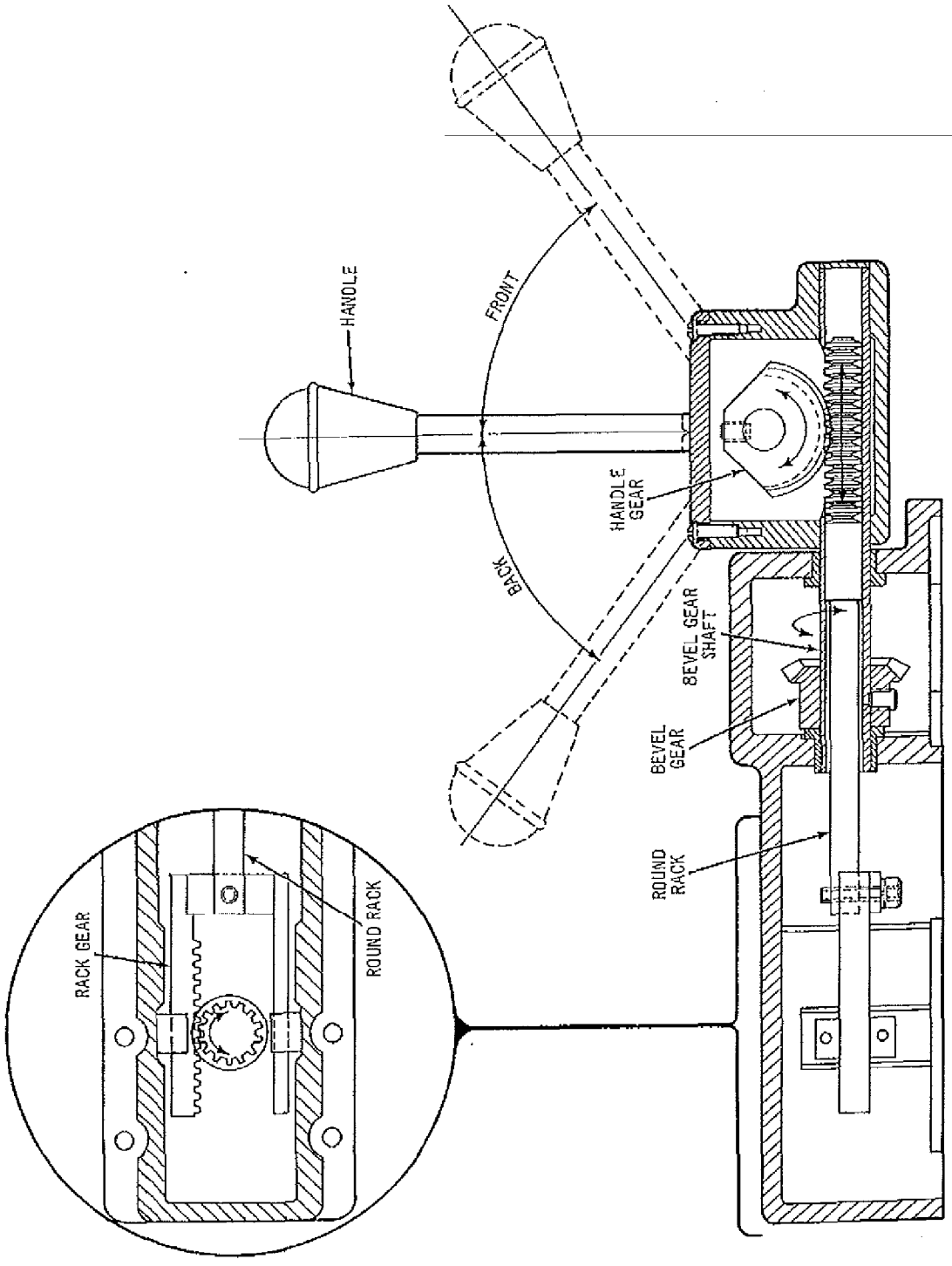

Figure 5-28. Type II Joy Stick Control Unit

Toth 00646

SECTION VI
BRIDGE DRIVE SYSTEM

INTRODUCTION

Four basic types of bridge drives are used on electric overhead cranes. Each is illustrated in Figure 6-1.

1. Center Gear Case Drive
2. Center Motor Drive
3. Dual Gear Case Drive
4. Individual Wheel Drive

The function of the bridge drive is to propel the bridge along the bridge runway. All the drives are similar, in that power from an electric motor is transmitted through a gear case and suitable shafts to the drive wheels at the ends of the bridge girder.

The center gear case drive is illustrated in Figure 6-2. The drive consists of a single electric motor supplying power to a single reduction gear case. The gear case is connected by shafts to the drive wheels at the ends of the bridge girder. As illustrated in Figure 6-2 the drive wheels can be directly connected to the gear case, or connected to the gear case through a gear and pinion at the drive wheels.

Figure 6-3 illustrates the typical center motor drive. This drive uses a single electric motor, with the output shaft extending from both ends of the motor. Shafts connect the motor to two gear cases, one located near each end of the bridge girder. The drive wheels are connected directly to the gear cases.

Figure 6-4 illustrates the typical dual gear case drive. This drive is a combination of the center gear case and center motor drives. It incorporates a single motor and gear case at the center of the bridge girder with two gear cases near each end of the bridge girder. The drive wheels are connected directly to the gear cases near the ends of the bridge girder.

Figure 6-5 illustrates the typical individual wheel drive. It consists of a single motor, gear case, shaft, and wheel, driving one end of the bridge. Two individual wheel drives are used to propel the bridge along the runway. Each electric motor supplies power to a gear case, which is directly connected to a drive wheel on the bridge. A variation of this drive is shown in Figure 6-1. The cross shafting which connects the two motors together allows the bridge to continue to run at a reduced speed in the event that one electric motor fails.

The maintenance and adjustment of the above components are described in the order they appear in Figure 6-1, starting with the electric motor.

ELECTRIC MOTORS

NOTE

The description and maintenance procedures in the following paragraphs are general in nature. For more specific information, refer to P&H Bulletins ED-6 (AC wound rotor motors), ED-7 (DC motors) and ED-11 (AC squirrel cage motors).

Toth 00647

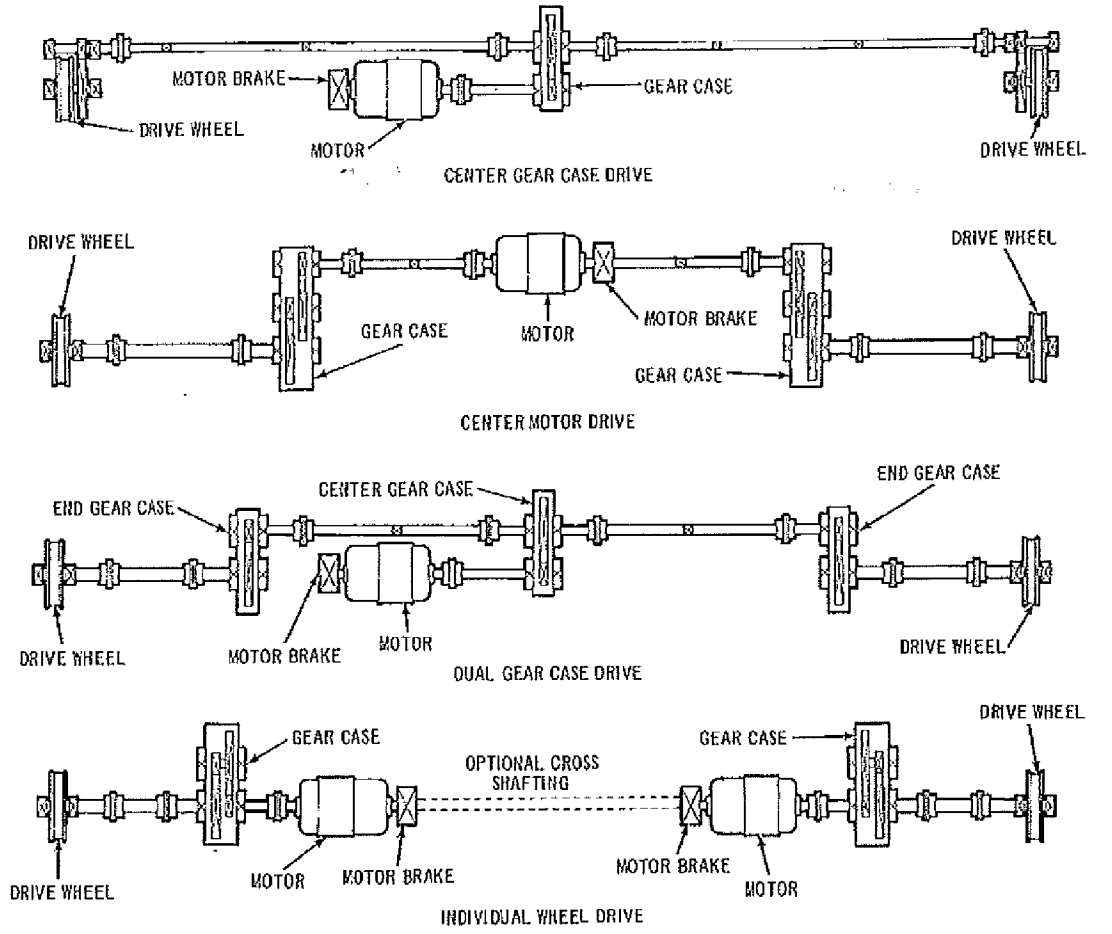

Figure 6-1. Typical Bridge Drive Arrangements

GENERAL. All crane motors are built specifically for rugged crane service. They are designed for rapid acceleration and frequent reversals. Both Alternating Current (AC) and Direct Current (DC) motors are used for crane applications, depending on the type of power supply.

The DC motors are normally series wound, totally enclosed, with a split or solid frame. The AC motors are normally of the three phase wound rotor or squirrel cage induction type, with an enclosed or enclosed fan-cooled housing.

WARNING

Disconnect and lock open the power supply on the crane before starting any work on the motors.

MAINTENANCE. The maintenance procedures for the electric motors, both AC and DC are similar. It is recommended that a periodic inspection schedule be set up to inspect and clean the motors. Various forms are provided at the rear of this manual for the purpose of recording test results and various motor information. These forms should be copied and included as part of the periodic inspection schedule.

The following points should be kept in mind when inspecting the motors:

1. The motor should be blown out or vacuumed at least every 6 months, more often if conditions warrant, to keep the motor free of dust or other contaminants. Wipe any dirt from the exposed conductors, so a short circuit cannot be established between the conductors.

2. The stator and rotor should be subjected to an insulation resistance test by means of a 500 volt megger. The insulation resistance between the rotor, stator, and ground should not be less than 1 Megohm.

Toth 00648

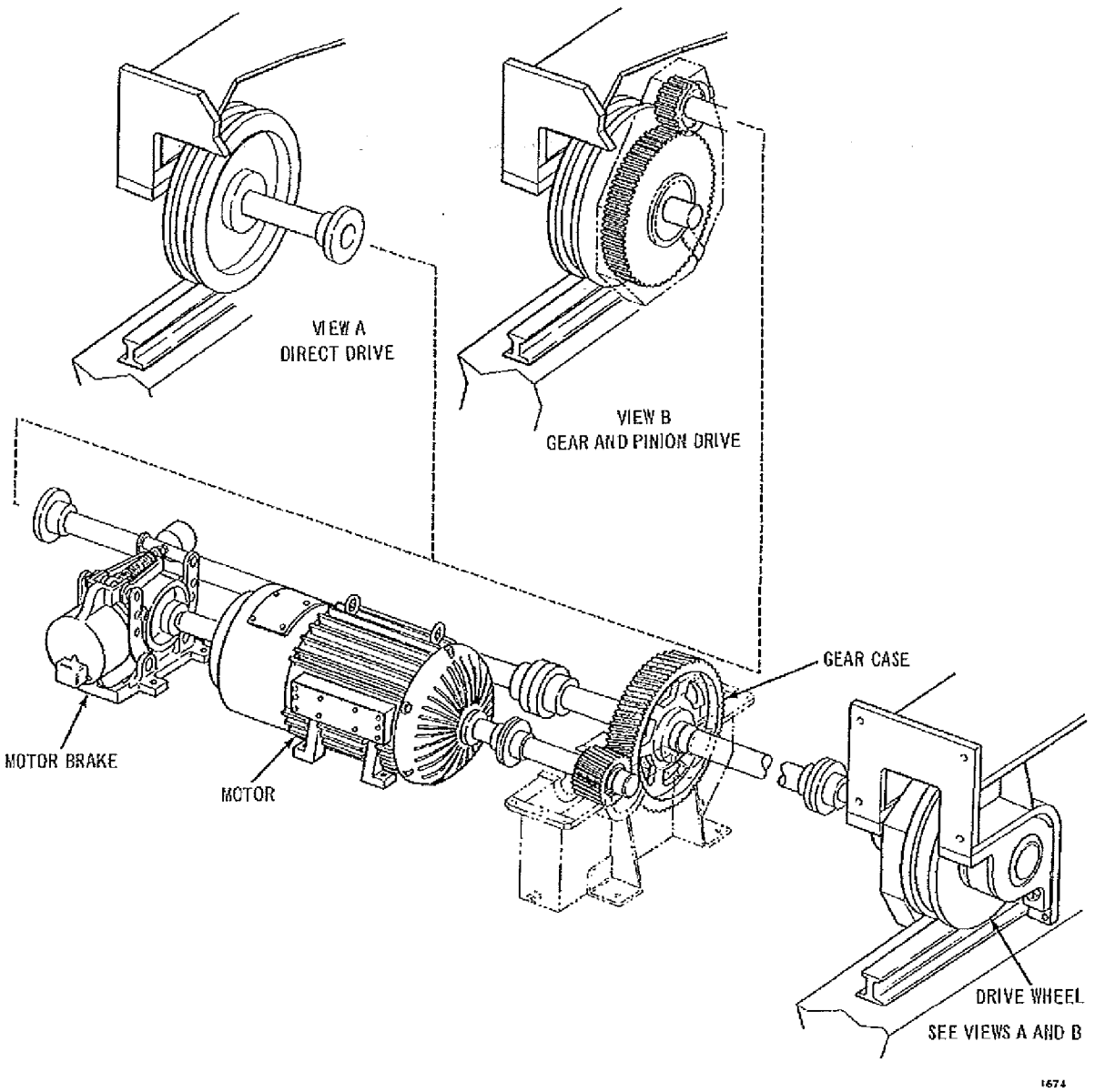

Figure 6-2. Typical Center Gear Case Drive

The frequency at which the test should be performed will depend on the operating conditions.

3. Inspect the banding for tightness.

4. The flexible copper brush shunt must be securely fastened to the brush holder.

5. When replacing or renewing the brushes, they must be carefully fitted to the contour of the commutator or slip rings with fine sandpaper (#00). After seating the brushes, remove them from the holders and clean the brushes and holder to insure free movement of the brushes in the holders. Remove the carbon dust from the motor after sanding the brushes.

6. The slip rings must be kept clean, smooth, and concentric. They can be cleaned with any commercial electrical cleaning solvent or fine sandpaper (#00).

Toth 00649

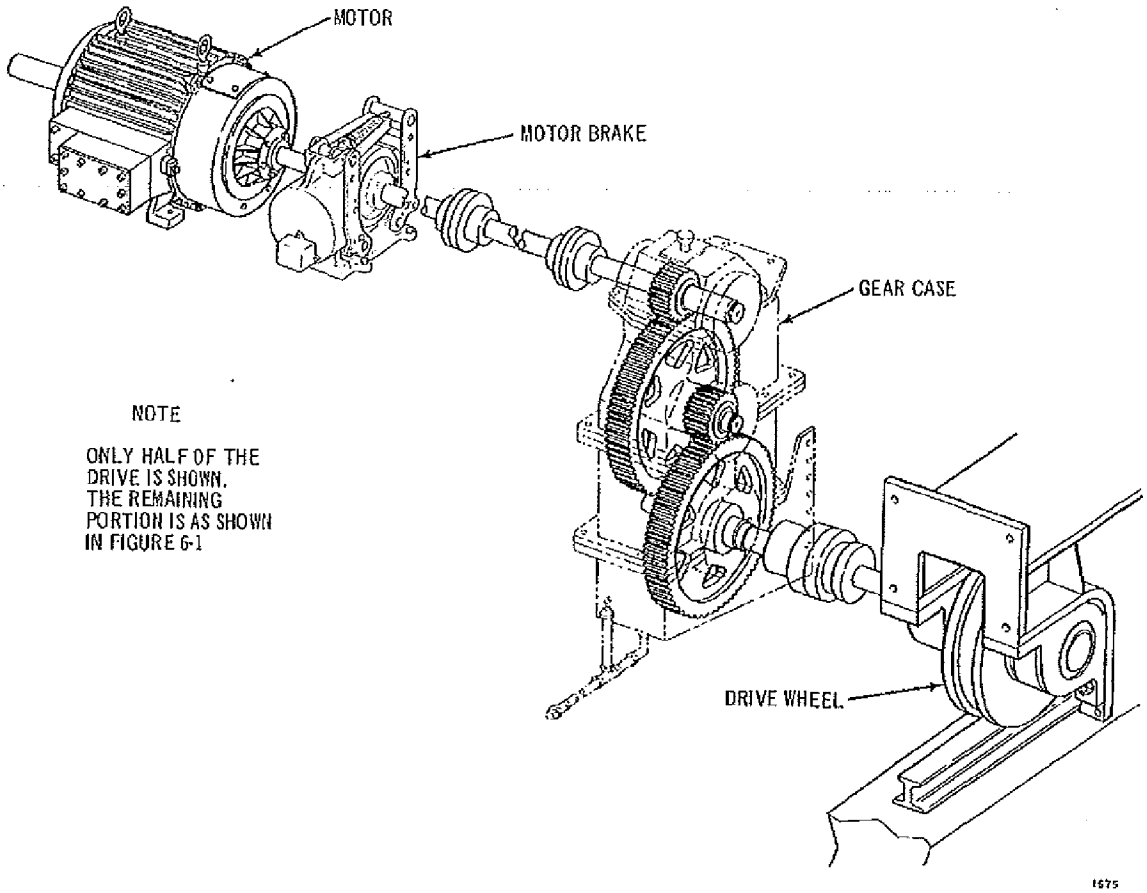

Figure 6-3. Typical Center Motor Drive

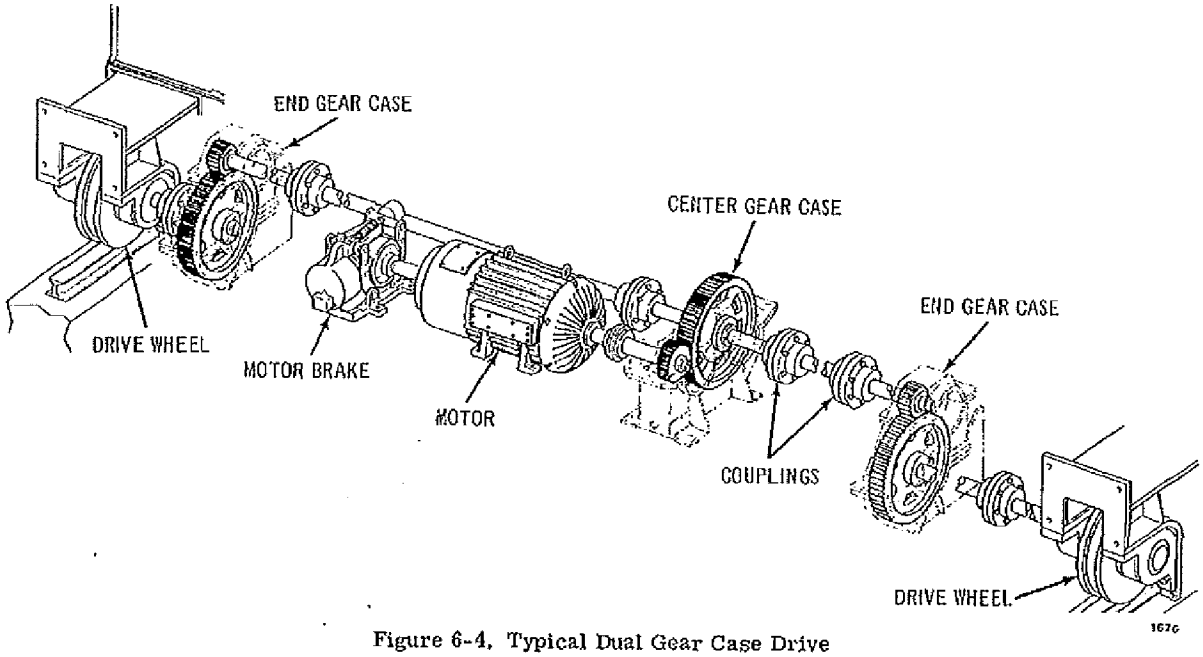

Figure 6-4. Typical Dual Gear Case Drive

Toth 00650

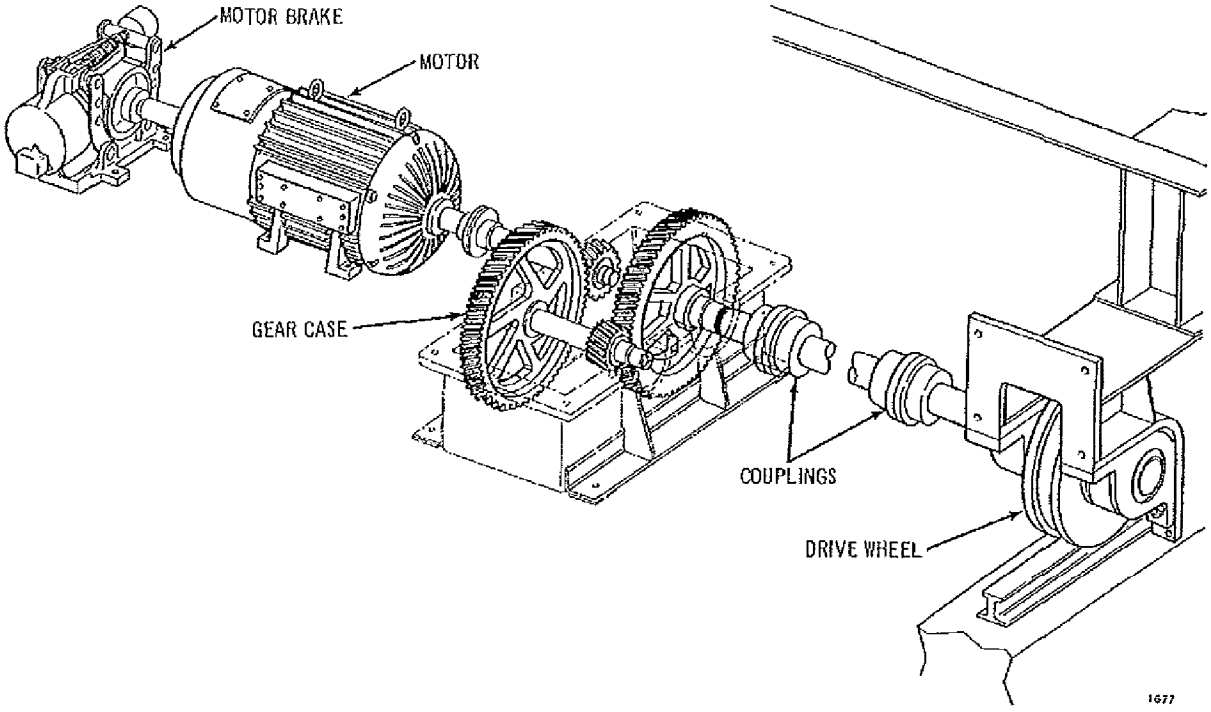

Figure 6-5. Typical Individual Wheel Drive

7. If the slip rings are rough or pitted, smooth out with fine sandpaper, turn down with a light cut on a lathe, or grind with a fine stone, followed by a polishing with #00 or #000 sandpaper.

In addition to the points discussed above, the DC motor requires the following inspection and maintenance. The commutator surface must be smooth, concentric, and properly undercut. The normal appearance of the commutator is chocolate brown in color. If any of these conditions do not exist, one of the following procedures is recommended:

1. Sand the commutator with fine sandpaper to smooth out any pitting or roughness.

2. If the commutator is eccentric or deeply pitted, remove the armature and take a slight cut on the commutator in a lathe, followed by undercutting and a final polishing. The undercut grooves must be kept free of carbon dust.

3. Be sure the mica between the commutator bars is undercut to a depth of approximately 1/32 to 1/16 inch after turning. It is advisable to make periodic inspections to make sure that the mica is not flush with the commutator bars.

4. The commutator must be kept free of oil, grease, wax, or other contaminants.

AC MOTORS. If brush adjustment is required, the following procedure should be used:

1. Check all brushes to insure that they make good contact with the slip rings and they move freely in the brush holders. See Figure 6-6.

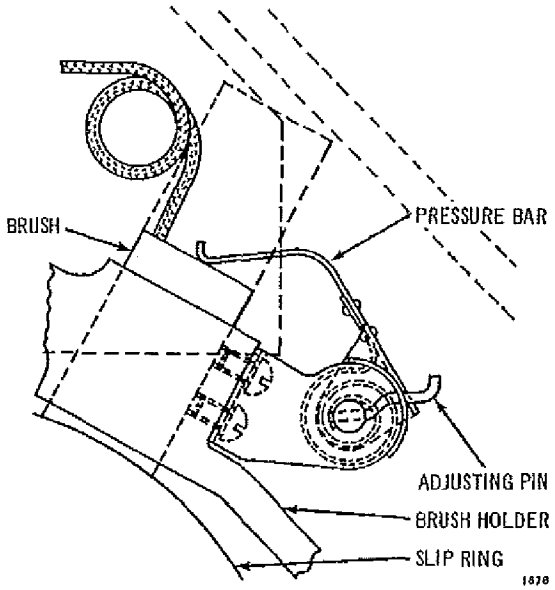

Figure 6-6. Brush Holder Assembly for AC Motors

Toth 00651

2. Adjust brush pressure by moving the adjusting pin. The brush pressure must be maintained between 3-1/2 and 4-1/2 pounds per square inch of brush contact surface.

Dual voltage AC motors have a connection plate attached to the side of the motor. Should it be necessary to reconnect the motor from low voltage to high voltage (or high voltage to low voltage), disconnect the power supply leads to the motor, and reconnect the stator terminals to the leads in accordance with the connection plate diagram.

All crane motors are connected according to NEMA connection standards. Figures 6-7, 6-8, and 6-9 illustrate the NEMA connection standards.

If the direction of rotation is incorrect, reverse any two of the three line leads to the stator at the motor or reversing contactor. For two phase motors, reverse two leads which are common to one winding.

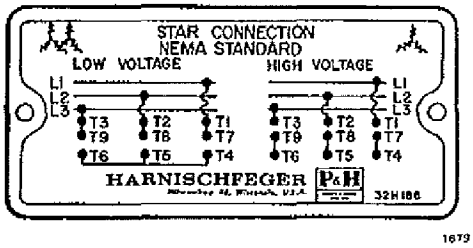

Figure 6-7. Star Connection, NEMA Standard

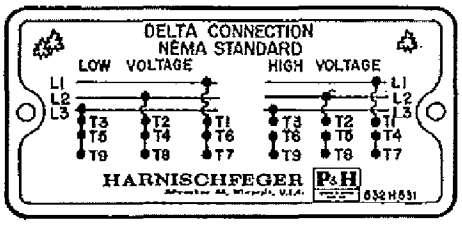

Figure 6-8. Delta Connection, NEMA Standard

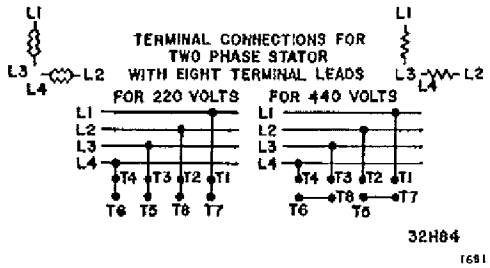

Figure 6-9. Two Phase, NEMA Standard

DC MOTORS. If brush adjustment is required, the following procedure should be used:

1. Raise the pressure bar from the top of the brush and remove the brush from the brush holder. See Figure 6-10.

2. Loosen the brush holder nuts.

3. Slide a strip of wood 1/16 to 3/32 inch thick between the brush holder and commutator. Lower the brush holder until it makes contact with the wooden spacer.

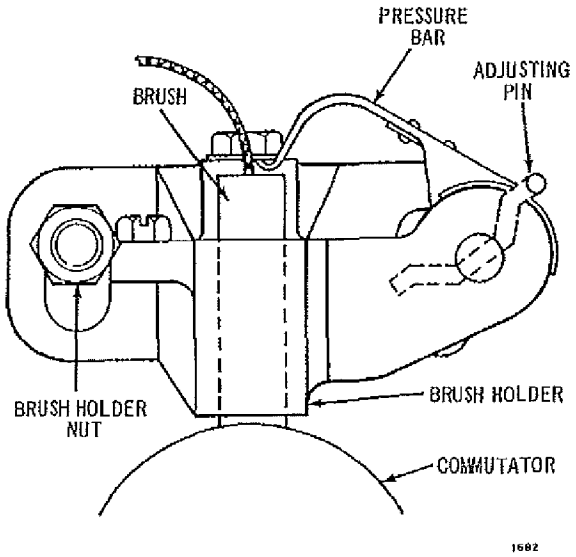

Figure 6-10. Brush Holder Assembly for DC Motors

4. Tighten the brush holder nuts and remove the spacer.

5. Check the space between all the brush holders and the commutator with the spacer. The space should be the same for all. Make sure that the brush holders are perpendicular to the commutator and properly positioned around the commutator.

6. Check to see that the brushes make good contact with the commutator and move freely in the brush holders. To insure good contact, draw a strip of fine #00 sandpaper between the commutator and the brushes.

CAUTION

Do not use emery cloth to seat the brushes on the commutator.

7. Adjust the brush pressure by moving the adjusting pin. The brush pressure must be maintained be-

Toth 00652

tween 4 and 6 pounds per square inch of brush contact surface.

Figures 6-11 and 6-12 illustrate the wiring diagrams for the DC motors most commonly used on overhead cranes.

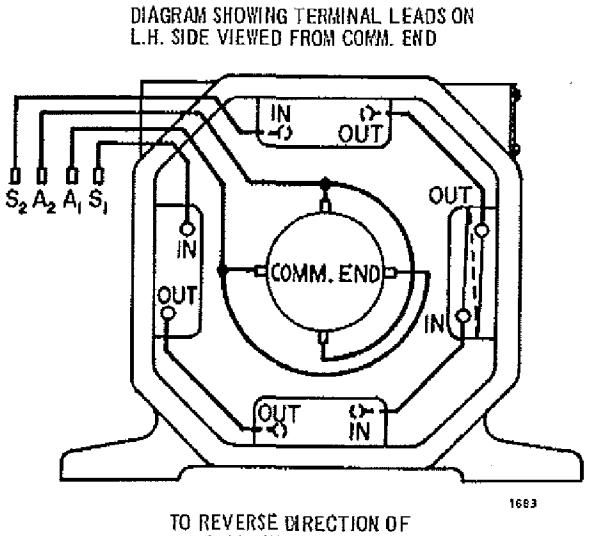

Figure 6-11. 4 Pole Reversible Series DC Motor without Interpoles

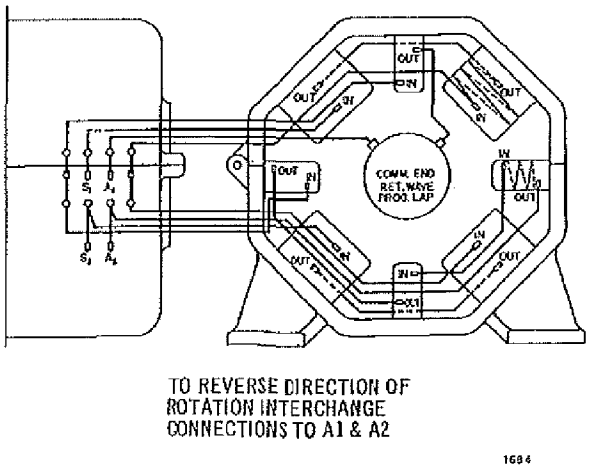

Figure 6-12. 4 Pole Reversible Series DC Motor with Interpoles

MOTOR BRAKES

The operation and maintenance of the motor brakes is described in SECTION IX.

COUPLINGS

INTRODUCTION. Overhead cranes use various sizes and types of couplings to connect the motor output shaft to the gear case(s) and the gear case(s) to the drive wheels or hoist drum. The actual size and type of couplings on a particular crane will depend on the size and application of the crane. The couplings do not normally require any maintenance, other than lubrication and checking the bolts for tightness at regular intervals.

REPLACEMENT. If coupling must be replaced, the following points should be kept in mind:

1. When a straight shaft is used with a flexible or semi-flexible coupling, the shaft end must be flush with the face of the coupling to insure proper shaft float.

2. Tapered shaft ends will extend beyond the face of the coupling and must be fully seated.

3. Before tightening the compression or split type coupling, check the spacing between the shaft ends. The spacing must be approximately 1/8 to 1/4 inch between the shaft ends. To maintain proper balance of the coupling, the nuts and bolts on one side of the coupling must be installed in the opposite direction of the others. See Figure 6-13.

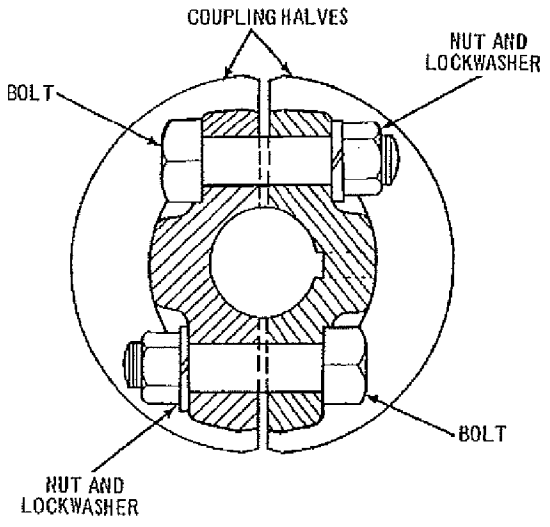

Figure 6-13. Correct Method of Bolting Split Coupling

Toth 00653

4. The compression or split couplings are match-marked to insure that they are properly balanced when assembled. DO NOT INTERCHANGE COUPLING HALVES. Be sure to align the matchmarks.

5. The shaft ends must be flush with the inner face of the flange type rigid coupling, to insure proper shaft spacing. If the coupling utilizes face keys, the ends of the shaft must be flush with the bottom of the face keyway. The matchmarks must be aligned to maintain proper balance of the coupling.

NOTE

It may be necessary to jack up the end truck to rotate the truck wheel while aligning the shaft and face keyways.

MAGNETORQUE

A MAGNETORQUE® electric load brake normally is not used on bridge applications. If the MAGNETORQUE is used, the location will differ, depending on the type of drive. The operation and maintenance of the MAGNETORQUE is described in SECTION VIII.

GEAR CASE

INTRODUCTION. The function of a gear case is to transmit motor torque. As illustrated in Figure 6-14 the gear case consists of a number of different size pinions and gears, helical or spur, housed in a gear case and mesh with each other to provide a continuous transmission of power from the input shaft to the output shaft. The size of the gears and the number of reductions determines the output speed and the amount of torque. The gears are press fitted to a keyed shaft and are supported in the gear case by anti-friction bearings which are enclosed in a bearing capsule. Some bearing capsules are shimmed for the proper amount of end play during assembly. The gear cases are designed so that the top of the gear case can be removed without distrubing the gears or gear shafts.

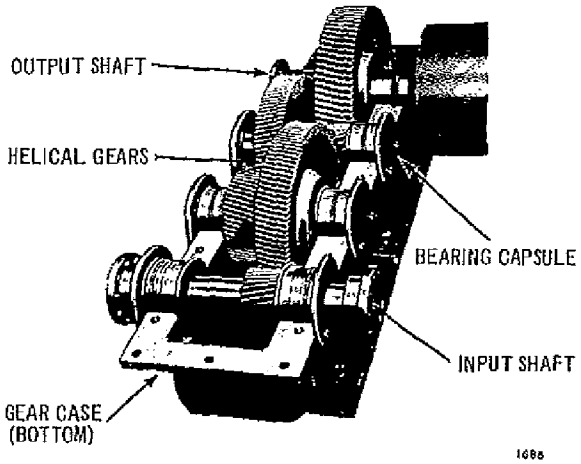

Figure 6-14. Typical Gear Case

MAINTENANCE. The following points and the points in SECTION X should be kept in mind when performing any work on the gear case.

1. Inspect the gear case for backlash and end play. The proper backlash is manufactured into the gears and the total backlash is checked during assembly. The end play is controlled by shims used with some bearing capsules. If the shims and bearings are removed, the same shims must be replaced at reassembly. If shims must be replaced, replace them with shims of the same thickness as the originals.

2. Inspect the gear case lubricant for foreign particles or other contaminants.

3. If the gear case is equipped with a pressurized lubricating system, check for positive output of lubricating oil from the pump. If there is not sufficient flow of gear oil, check the gear case for sufficient lubricant and possible damage to the piping.

4. Coat all mating surfaces of the gear case halves with a non-hardening liquid sealer prior to reassembling the gear case.

5. Wire all capscrews which were wired prior to disassembly.

BRIDGE DRIVE WHEELS

INTRODUCTION. The bridge drive wheels are matched, since wheels of unequal diameter will cause one end of the bridge to run ahead of the other. This is called "skewing".

INSPECTION. The drive wheels must be inspected at regular intervals as follows:

1. Measure the circumference of all the drive wheels with a steel tape measure. The variations in the circumferences must not exceed 1/32 inch.

2. Inspect the wheel flanges for wear and signs of the flange rubbing against the runway rail.

3. Inspect the wheels for flat spots and any unusual wear patterns or markings.

4. Inspect the wheel bearings for lubrication.

5. Inspect the wheels for excessive float. Wheel float is the amount the wheel can move across the

Toth 00654

rail from flange to flange. The wheel float is approximately 1 inch for wheels with straight treads and 1-1/2 inch for wheels with tapered treads.

NOTE

The wheel float of the flangeless wheel is controlled by the side roller. Side float should be 1/2 inch per side.

If any of the above conditions exist the wheel must be repaired or replaced.

NOTE

When replacing either a bridge wheel or a wheel bearing, care must be taken to insure that bearing retainers, if reused, are returned to their original locations. Bearing retainers are individually fitted to the end trucks. A new bearing retainer must be firmly seated against the vertical and horizontal locating faces on the end truck, clamped, and then the mounting holes must be reamed size-on-size.

COLLECTORS AND CONDUCTORS

DESCRIPTION. The function of the collectors and conductors is to provide a continuous electrical connection between the power source and the crane, as the crane moves along the runway or as the trolley moves along the bridge. See Figure 6-15. The collectors are metal shoes or wheels which contact a bare metal conductor. The conductors are made from various materials and in various cross-sectional configurations, such as figure-8, round, angle, bar, or tee. Figure-8 and round conductors are hard drawn copper wire. The angle, bar, and tee conductors can be made of copper, aluminum or steel depending on the environment.

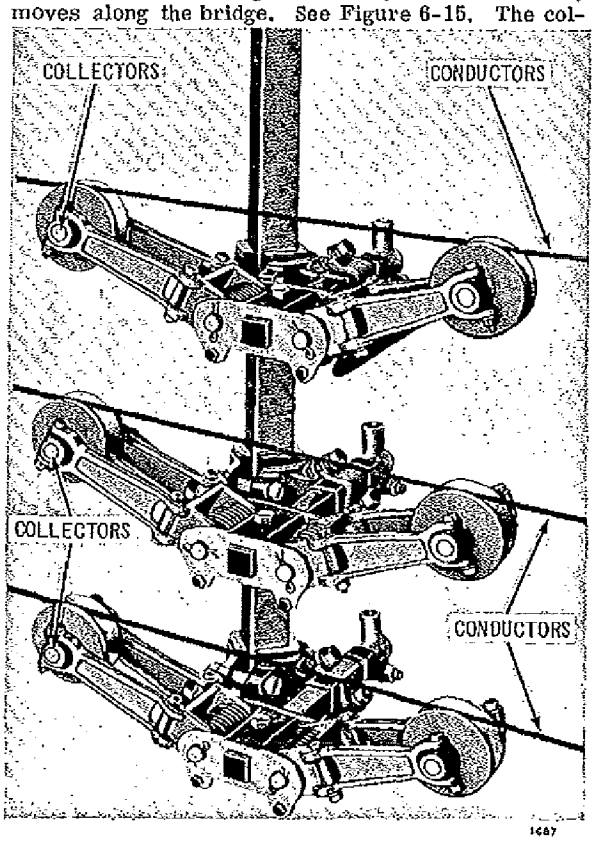

Figure 6-15. Typical Collector-Conductor System

MAINTENANCE. All the collectors and conductors must be inspected at regular intervals. Check the following items:

CAUTION

Lock open the mainline power supply switch before performing any work on the collectors and conductors.

1. The contact surface of the collectors and conductors must be kept clean so that good electrical connections are maintained.

2. The vertical and horizontal alignment of the entire system must be straight and true.

NOTE

The alignment is made with respect to the runway rail and NOT the runway beam.

3. The collectors must be adjusted to maintain proper contact pressure for the entire length of the conductor system.

4. The collector shunts must be in place and securely fastened. Evidence of broken strands should be considered cause to consider replacement of collector shunts.

5. The hinge points of the collector shall be lubricated periodically with a light lubricating oil. See SECTION IV.

6. Inspect the collector shoes or wheels, and bearings for excessive wear. Replace all worn parts.

7. Copper wire conductors must be free of kinks or bends.

8. The insulation must be kept clean to prevent a short circuit between the conductor and its supporting member.

ADJUSTMENT. Whenever a collector or conductor is replaced all the collectors on the support bar must be checked to insure that they are properly aligned. Figures 6-16 through 6-19 illustrate the alignment tolerances which shall be held between the collectors and conductors.

Toth 00655

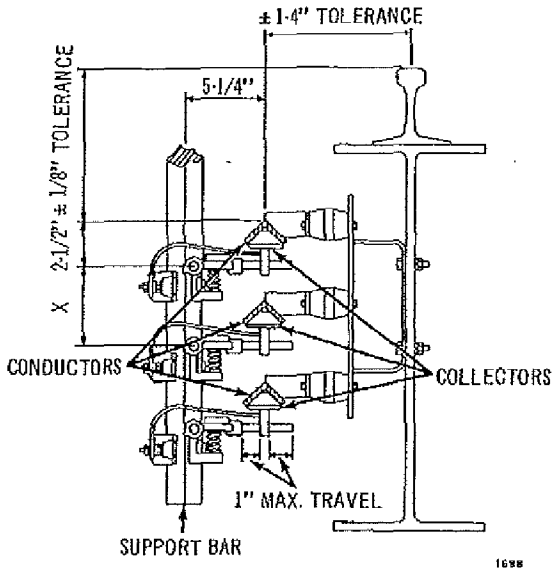

Size Angle Conductor	2-1/2" x 2-1/2" x Thickness	2" x 2" x Thickness
"X"	5-1/8" Min.	4-3/4" Min.

Figure 6-16. Mainline Collectors
Type "C-1" Collectors

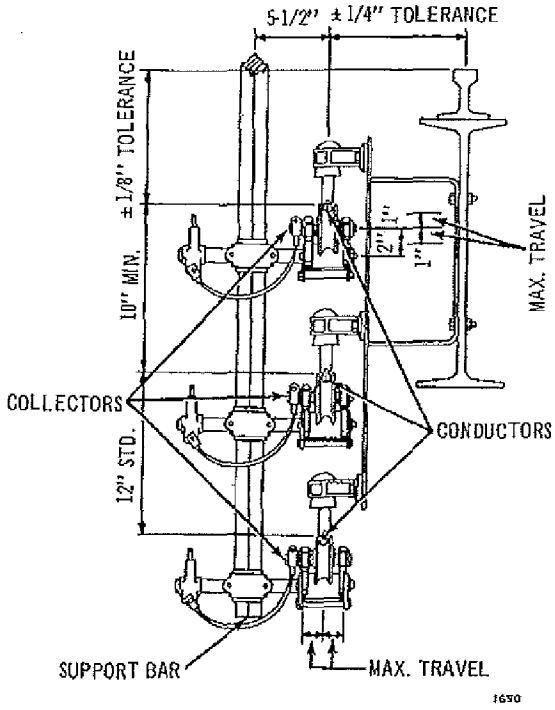

Figure 6-18. Mainline Collectors
Type "F" Collectors

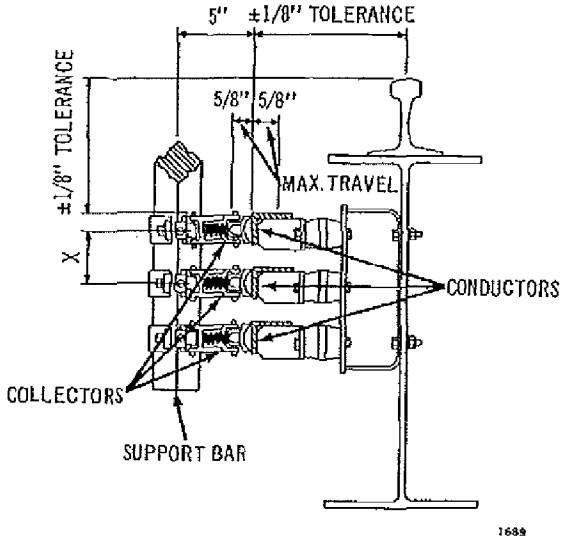

Min. Dimension of Vertical Contact Surface	2-1/2"	2"
"X"	5-1/8" Min.	4-3/4" Min.

Figure 6-17. Mainline Collectors
Type "D-1" Collectors

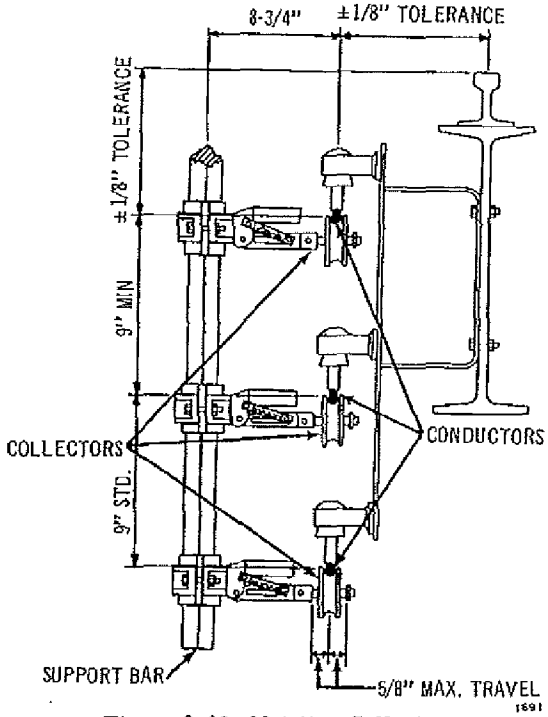

Figure 6-19. Mainline Collectors
Type "E-1" Collectors

Toth 00656

SECTION VII
TROLLEY DRIVE SYSTEM

DESCRIPTION

The function of the trolley drive is to propel the trolley along the bridge. All the drives are similar in that power from an electric motor is transmitted through a gear reduction and drive shafts to the drive wheels at the ends of the trolley. The size and number of reductions in the gear case, and the actual physical location of the various components will vary depending on the size and operational requirements of the trolley.

The operation and maintenance of the components used in the trolley drive will be described in the order they appear, Figure 7-1, starting with the electric motor.

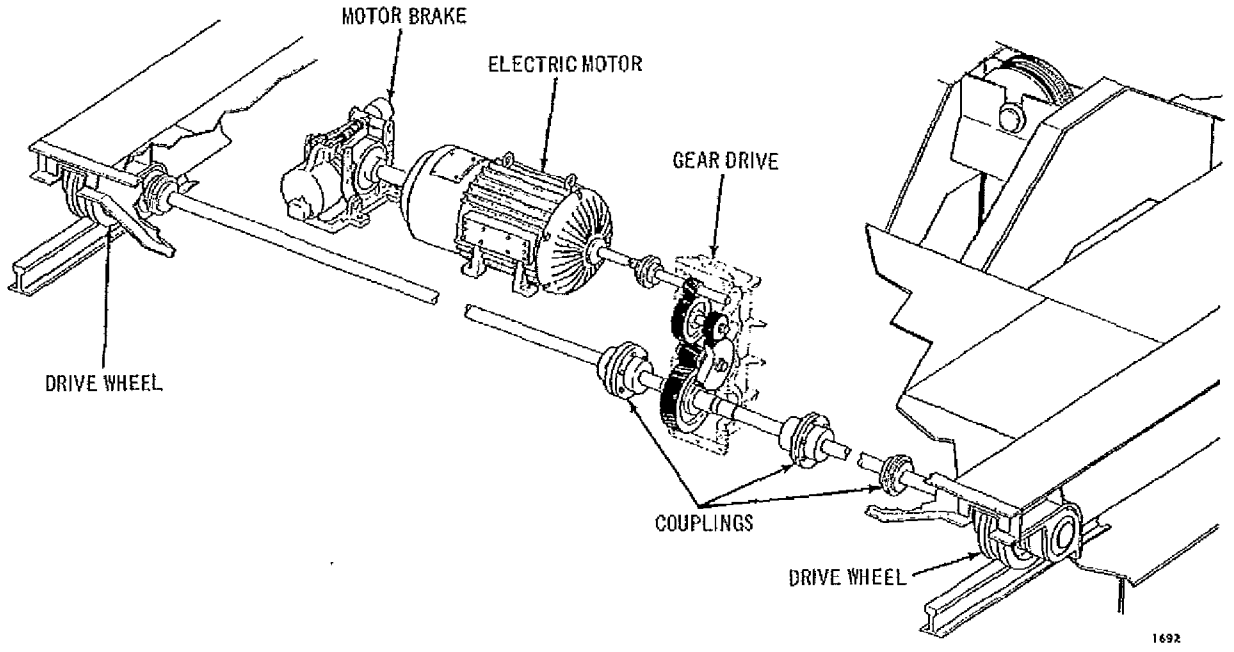

Figure 7-1. Typical Trolley Drive

Toth 00657

ELECTRIC MOTORS

The maintenance and adjustment procedures for the electric motors are described in SECTION VI, BRIDGE DRIVE SYSTEMS.

MOTOR BRAKES

The maintenance and adjustment procedures for the motor brakes will be described in SECTION IX, MOTOR BRAKES.

COUPLINGS

The maintenance of the couplings is described in SECTION VI.

MAGNETORQUE

The maintenance and adjustment of the MAGNETORQUE electric load brake is described in SECTION VIII.

GEAR CASE

The maintenance of the gear case is described in SECTION VI.

COLLECTORS AND CONDUCTORS

GENERAL. The function of the collectors and conductors is to provide a continuous electrical connection between the power source and the trolley as it moves along the bridge.

The maintenance of the collectors and conductors is described in SECTION VI.

ADJUSTMENT. Whenever a collector or conductor is replaced, all the collectors on the support bar must be inspected to insure that they are properly aligned. Figures 7-2 through 7-5 illustrate the proper alignment which must be maintained between the collectors and conductors.

FESTOON CONDUCTOR SYSTEM. The function of the Festoon Conductor System is to supply power to the trolley. As illustrated in Figure 7-6 the system

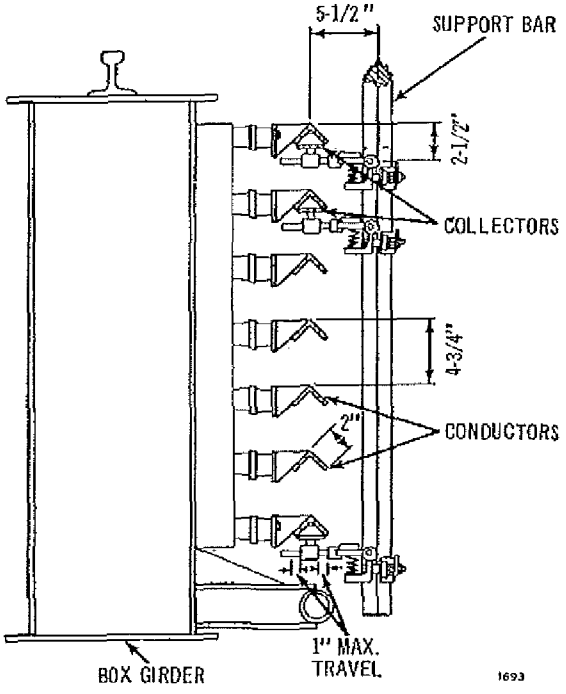

Figure 7-2. Trolley Collectors Type "C"

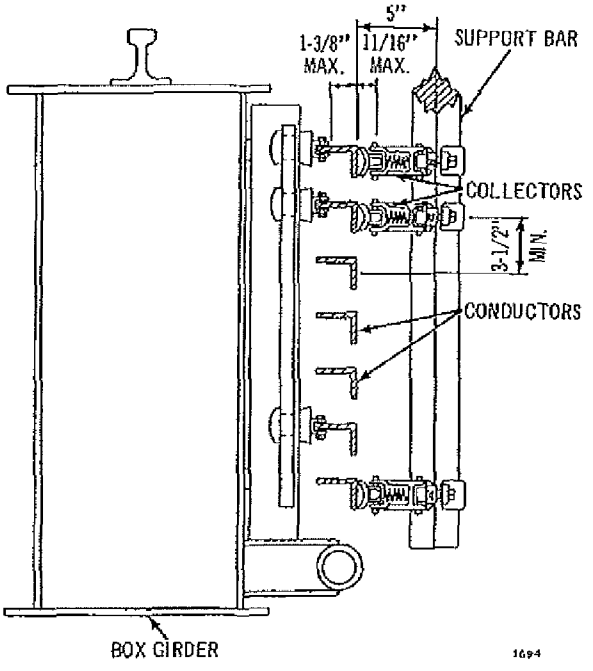

Figure 7-3. Trolley Collectors Type "D-1"

Toth 00658

consists of a number of small trolleys, running on an I-beam, which supports the electrical conductor cables. The trolleys are connected together by metal chain. The lead trolley is pulled along by the tow bar which is attached to the main trolley.

TROLLEY DRIVE WHEELS

The maintenance of the trolley drive wheels is the same as described in SECTION VI for the bridge drive wheels.

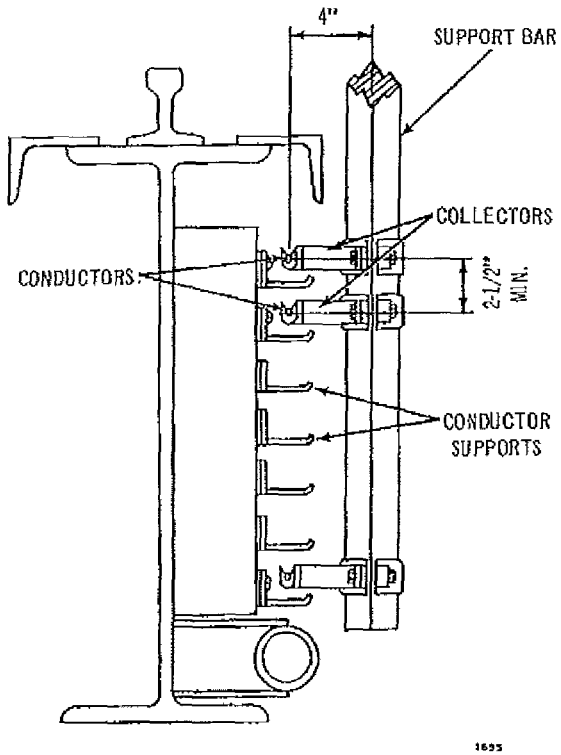

Figure 7-4. Trolley Collectors Type "D-2"

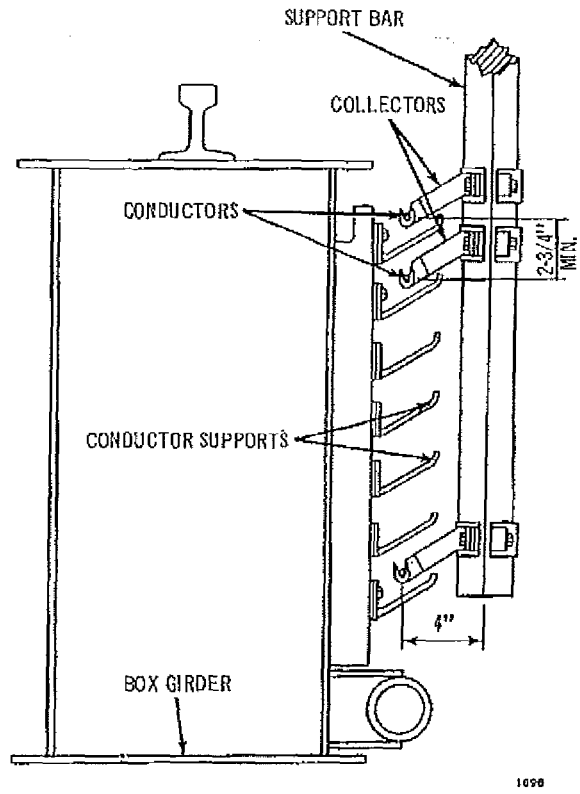

Figure 7-5. Trolley Collectors Type "V"

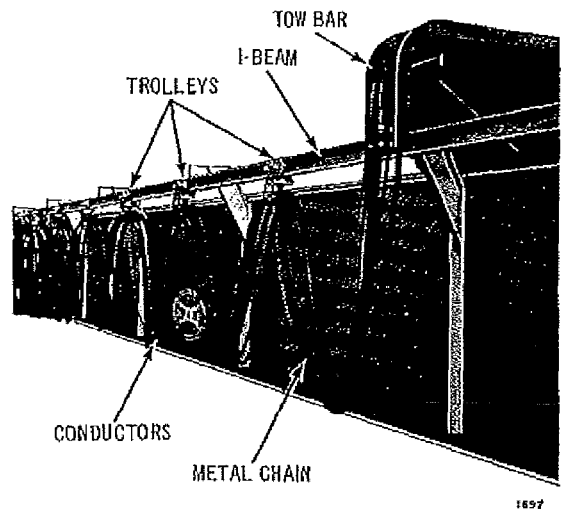

Figure 7-6. Festoon Conductor System

Toth 00659

SECTION VIII
HOIST SYSTEM

GENERAL

The function of the hoist system is to raise and lower a load. Figure 8-1 illustrates a typical hoist system. Basically, the system is a hoist drum driven by an electric motor through a gear case. The hoist drum is used to take-up and pay-out the wire rope used to raise and lower the load. The MAGNETORQUE load brake (if applied) can be located between the motor and gear case as shown or at other locations depending on the design of the

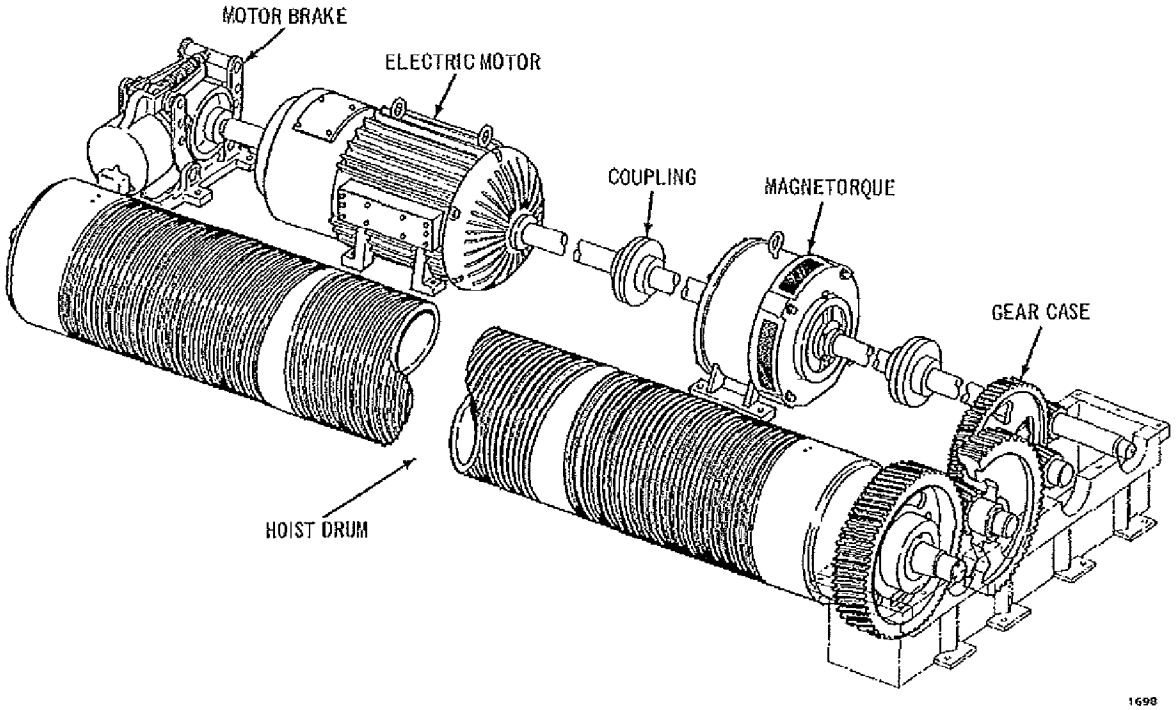

Figure 8-1. Typical Hoist System

Toth 00661

hoist system. An electric motor brake is used to stop and hold the load after it has stopped. The size and number of reductions in the gear case and the actual physical location of the various components will vary, depending on the size and operational requirements of the hoisting mechanism.

The operation and maintenance of the above components are described in the order they appear in Figure 8-1, starting with the electric motor.

ELECTRIC MOTOR

The maintenance and adjustment of the electric motor are described in SECTION VI.

MOTOR BRAKES

The maintenance and adjustment of the motor brake are described in SECTION IX.

COUPLINGS

The maintenance of the couplings is described in SECTION VI.

MAGNETORQUE

MAINTENANCE. The following items should be inspected and maintenance performed as indicated: See Figure 8-2.

1. The MAGNETORQUE unit should be blown out or vacuumed periodically, depending on the atmospheric conditions.

2. If the MAGNETORQUE unit is equipped with sealed bearings, they must be removed, cleaned, and repacked with Shell Darina #2 EP (P&H Specification #476) after every 10,000 hours of operation.

3. If the MAGNETORQUE unit is equipped with lubrication fittings, proceed as follows:

A. Remove the drain plugs and place a container under the drain holes to catch the old lubricant that is pumped out.

B. Pump Shell Darina #2 EP into the grease fitting until clean lubricant is expelled from the drain hole.

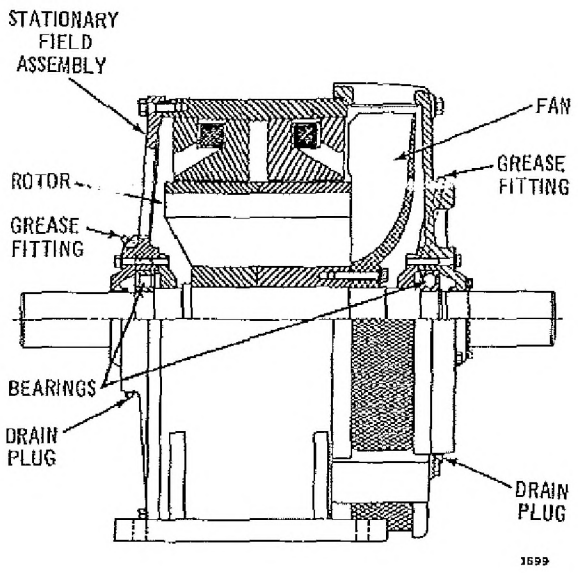

Figure 8-2. MAGNETORQUE Unit

C. Leave the drain plugs out for 1 hour after greasing, to allow the lubricant pressure to stabilize and to prevent damage to the seals.

ADJUSTMENT. The MAGNETORQUE unit does not require any adjustment. However, the procedure for adjusting the control systems which include the MAGNETORQUE unit is described in SECTION V.

GEAR CASE AND LOAD BRAKE

GEAR CASE

The maintenance of the gear case is described in SECTION VI.

LOAD BRAKE

DESCRIPTION. The function of the mechanical load brake is to hold the load after hoisting, and to control the speed of the load when lowering. The mechanical load brake consists of a threaded shaft with a fixed flange, a motor gear with a threaded bore, a ratchet with friction linings riveted to each side, and spring controlled pawls mounted in the gear case. See Figure 8-3.

During the raising cycle, the motor gear is driven clockwise causing the motor gear to compress the

Toth 00662

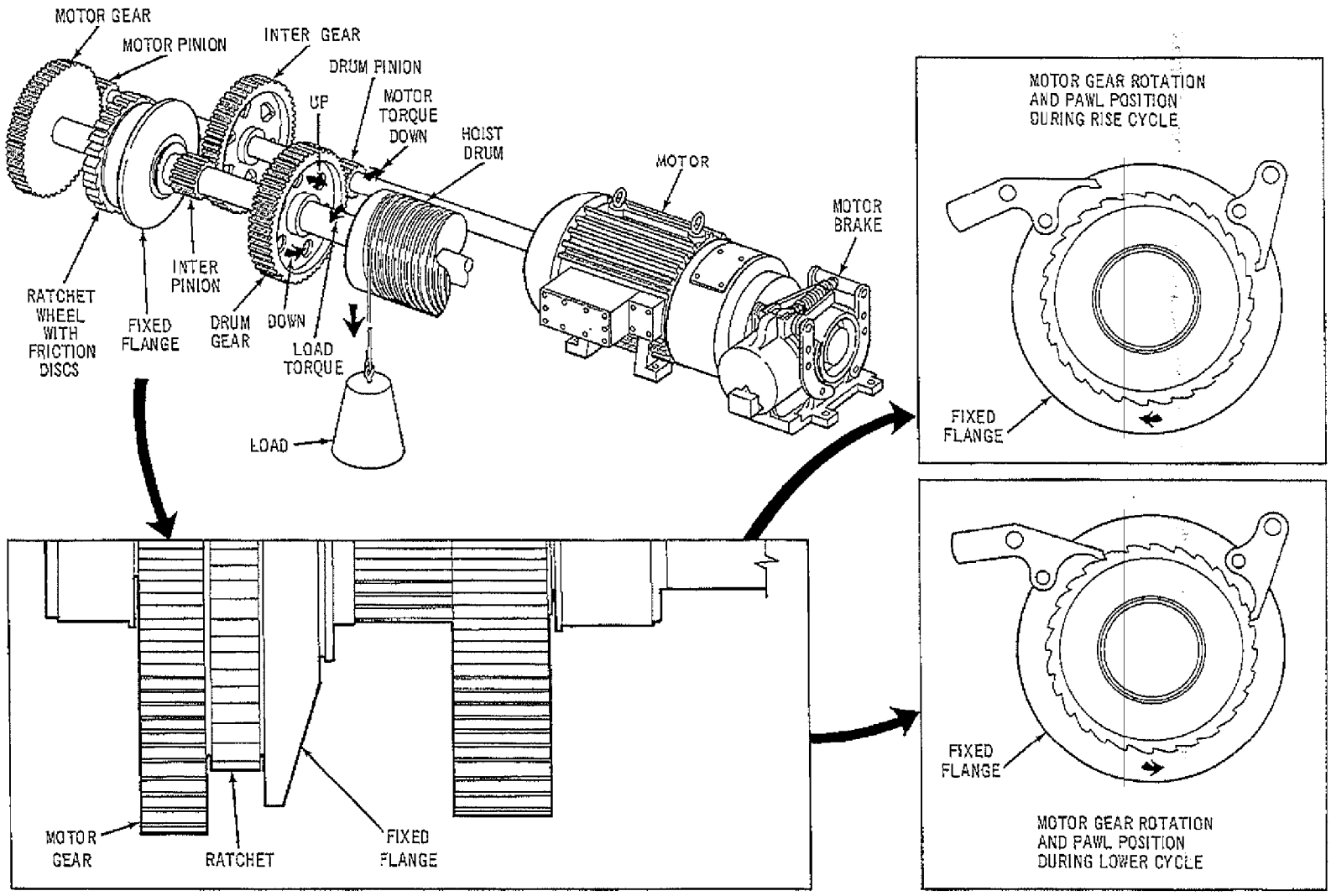

Figure 8-3. Principle of Mechanical Load Brake

Toth 00663

ratchet between itself and the fixed flange. The spring controlled pawls are thrown away from the ratchet, therefore, no braking action occurs.

During the lowering cycle, the motor gear is driven counterclockwise attempting to release the ratchet. Simultaneously, the load on the hook drives the fixed flange counterclockwise attempting to close the brake. The pawls engage the ratchet and forces the ratchet to slip between the motor gear and flange, thereby, creating braking torque.

PAWL ADJUSTMENT. The pawls must be kept properly adjusted to clear the ratchet teeth when raising and to engage the ratchet teeth when lowering. If a rapid clicking sound occurs in the gear case during the raising cycle, the pawls are touching the tips of the ratchet teeth. To adjust the pawls, proceed as follows:

1. Loosen an adjusting screw locknut. See Figure 8-4.

2. Operate the hoist in the raising direction and slowly turn the adjusting screw counterclockwise until the clicking sound stops. Then stop the hoist and turn the adjusting screw an additional one-half turn.

3. Tighten the adjusting screw locknut.

4. Repeat steps 1 through 3 to adjust the other pawl.

5. Check the lowering motions to be sure the pawls engage the ratchet firmly at the start of the lowering motion. If the pawls noisily hammer into the ratchet teeth, the clearance is excessive and must be adjusted accordingly.

INSPECTION. It is recommended that a periodic inspection schedule be set up to inspect the mechanical load brake. The frequency of inspection will depend on the operating conditions. This inspection should include the following:

1. The friction surfaces of the motor gear and fixed flange, and the pawl plugs must not be excessively worn or polished.

2. The brake must not be chattering.

3. The oil in the brake gear case must be at the proper level.

4. The friction linings must not be excessively worn.

HOIST LIMIT SWITCHES

GENERAL. The hoist limit switch is a safety device which prevents the bottom block from coming in contact with any part of the trolley. All limit switches are similar, in that they open circuits to stop the hoisting motion when the bottom block is raised above a preset upper limit.

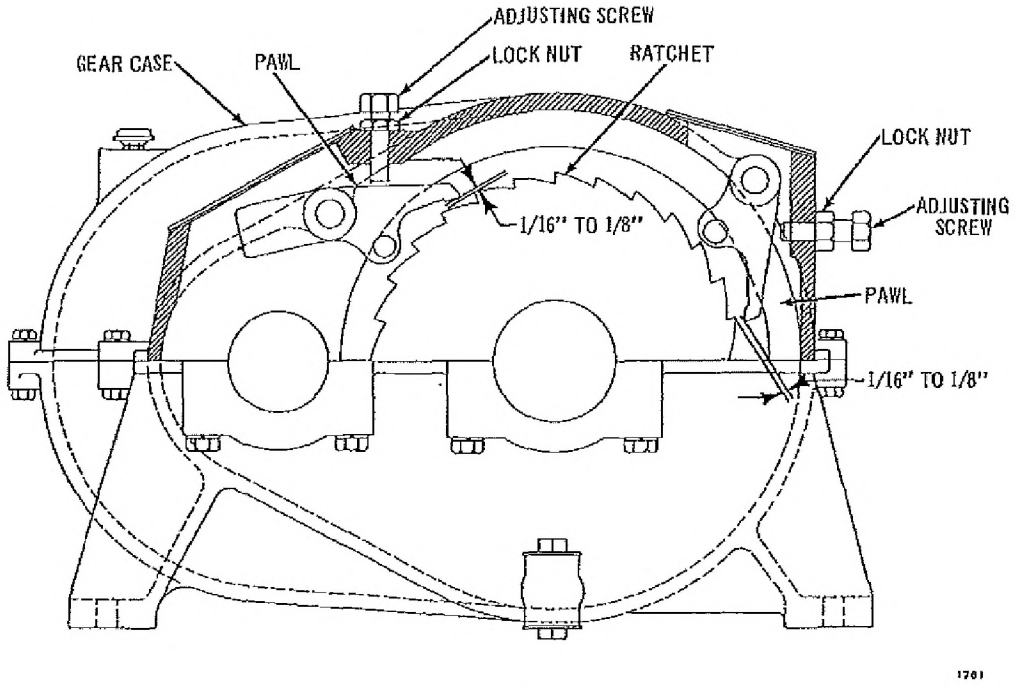

Figure 8-4. Load Brake Pawl Adjustment (100A2546)

Toth 00664

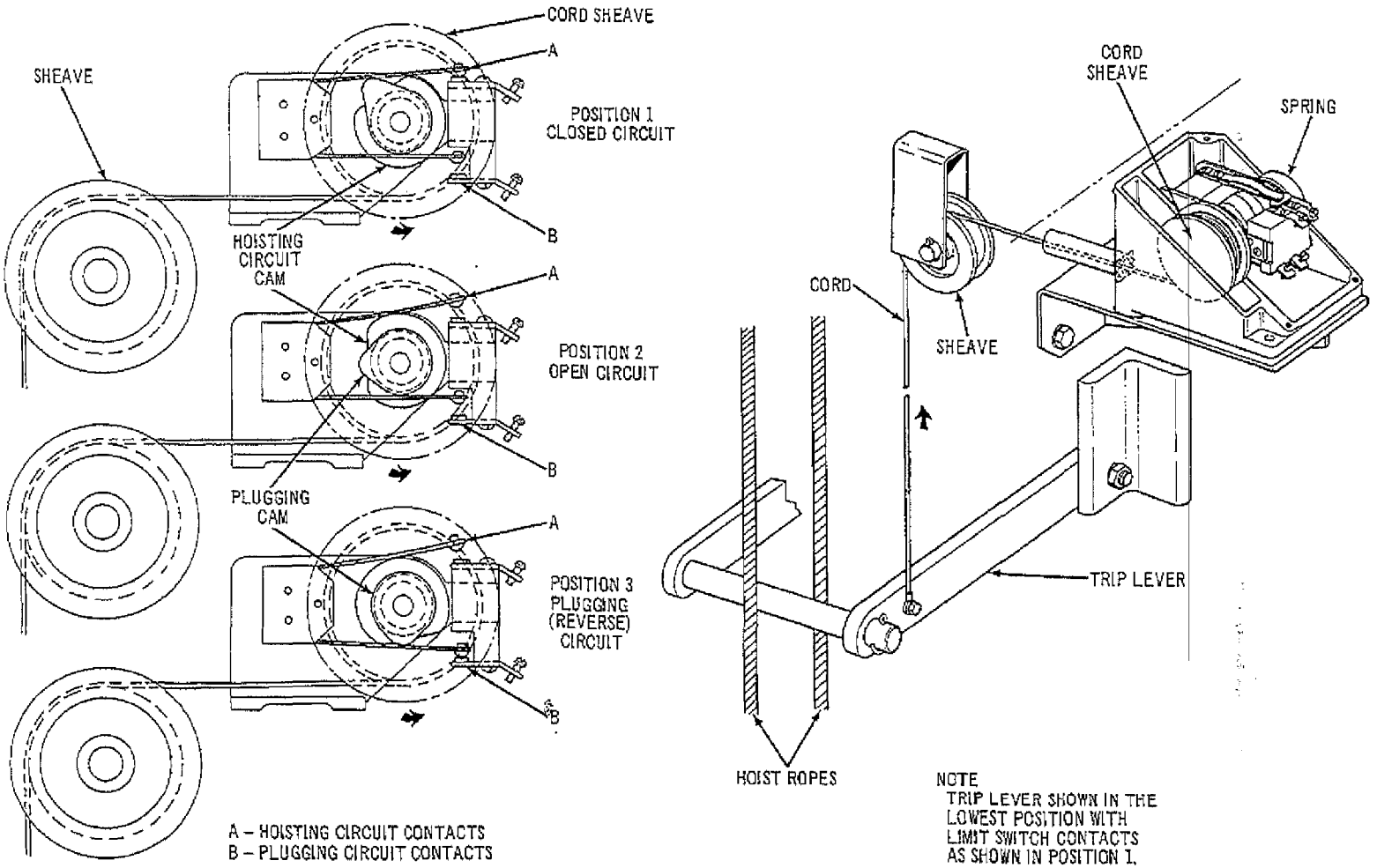

Figure 8-5. Type R Limit Switch

Toth 00665

The hoist limit switches automatically reset when the bottom block is lowered below the preset upper limit.

Two types of limit switches are used on crane applications. They are the weight operated limit switch and the geared limit switch. The operation and maintenance of both is described in the following paragraphs.

WEIGHT OPERATED LIMIT SWITCHES. The most common types of weight operated limit switches are illustrated in Figures 8-5 through 8-7. The following general description applies to all weight operated limit switches, regardless of type designation. The basic operation of any weight operated limit switch is as follows:

1. When the bottom block is below the preset upper limit, the reset counterweight or bar maintains the limit switch in its normal operating position. See Position 1, Figure 8-5.

2. When the bottom block approaches its preset upper limit it contacts the reset counterweight or bar. Further upper movement of the bottom block lifts the reset counterweight or bar, allowing the operating lever or sheave to rotate. As the operating lever or sheave rotates, it turns a shaft on which the actuating cams are mounted. Therefore, as the shaft rotates, the cams rotate until they open the normally closed contacts of the limit switch. This stops the hoist motor and applies the motor brake. See Position 2.

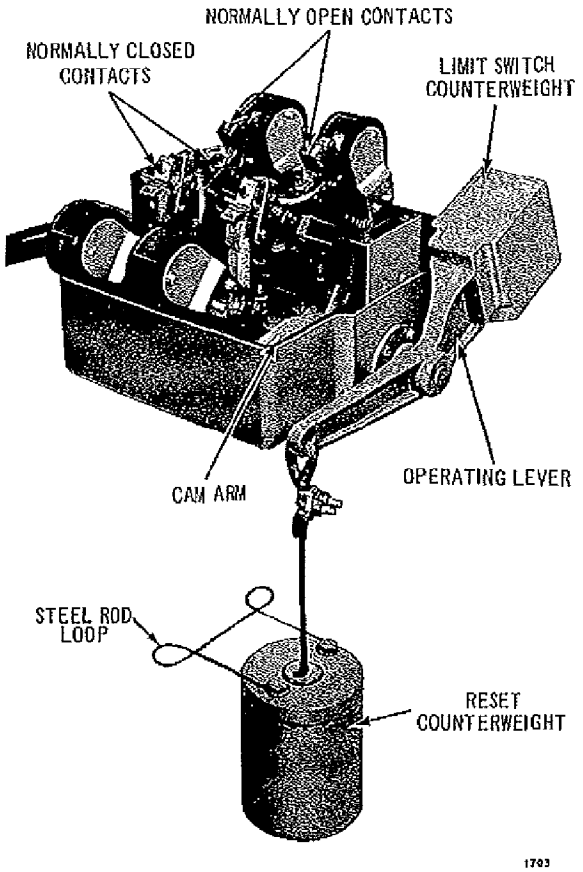

Figure 8-6. Type DB Limit Switch

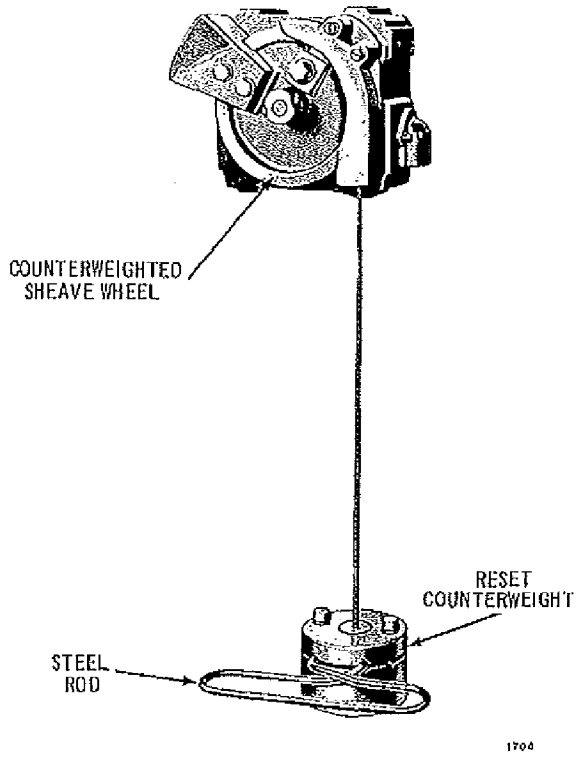

Figure 8-7. Type HB Limit Switch

3. If the bottom block drift beyond the preset upper limit, the reset counterweight or bar continues to rise, and the actuating cams rotate still further. Eventually, the plugging cams close the plugging circuit contacts. This reverses the hoist motor and lowers the bottom block below the preset upper limit. See Position 3.

Not all of the limit switches have plugging circuit contacts, and some of the limit switches that do have plugging circuit contacts use these contacts for purposes other than plugging. The function of the plugging circuit contacts, as applied to a particular application, can be determined by referring to the wiring diagrams furnished with the crane.

Normal limit switch maintenance consists of replacing the contact tips when they are burnt. The procedure for replacing the burnt contact tips is as follows:

1. Remove the limit switch cover.

Toth 00666

2. Remove and replace all the contact tips.

3. Replace the cover and test the limit switch to be sure that it is operating properly.

GEARED LIMIT SWITCH. The adjustable geared limit switch opens the HOIST circuit when the bottom block reaches a preset upper limit and opens the LOWER circuit when the bottom block reaches a preset lower limit. The limit switch is driven by the hoist drum, and is actuated after a predetermined number of drum revolutions.

Both the HOIST and LOWER circuits are connected through sets of normally closed contacts in the limit switch. Both the upper and lower limits of bottom block travel are preset at the factory. If the limit switch requires adjustment, proceed as follows: See Figure 8-8.

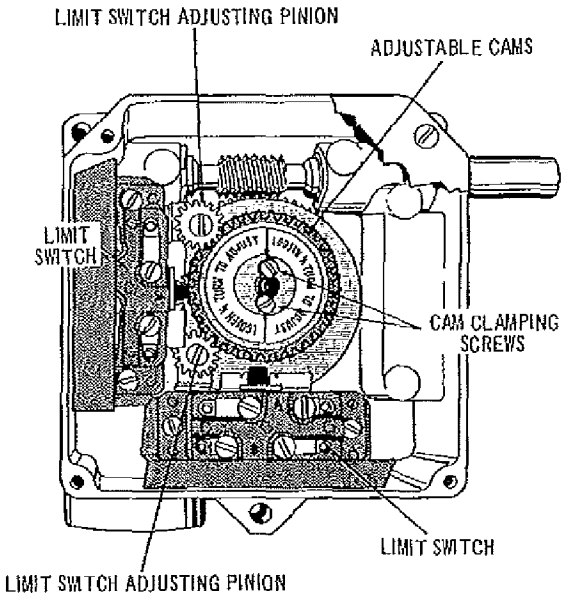

Figure 8-8. Geared Limit Switch Adjustment

NOTE

The lower limit of bottom block travel must be set so that the LOWER circuit opens when at least two wraps of cable remain on the drum. The upper limit must be set so that the bottom block stops a minimum of 6 inches before contacting the hoist drum or any part of the trolley. Sufficient clearance must be allowed to provide for a few inches of drift after the HOIST circuit is opened.

1. Remove the limit switch cover.

2. Operate the hoist to raise the bottom block to the desired upper limit of travel.

3. Loosen the two cam clamping screws 1/4 turn each.

4. Depress the upper limit switch adjusting pinion with a screwdriver until it meshes with the adjustable upper limit cam.

5. Rotate the cam in the direction to open the normally closed contacts. The white marker on the gear teeth is directly over the nylon roller which actuates the switch. Continue to rotate the cam until the contacts just open.

6. Tighten the two clamping screws.

7. Operate the hoist to lower the bottom block to the desired lower limit of travel.

8. Adjust the lower limit switch cam in a sequence similar to that used in steps 3, 4, 5, and 6.

9. Operate the hoist to check the upper and lower limit settings and readjust if necessary.

10. Replace the limit switch cover.

MAINTENANCE OF WIRE ROPE

GENERAL. All wire rope will eventually deteriorate to a point where it is no longer servicable. There are three basic causes of wire rope deterioration. They are:

1. Abrasion or wear.

2. Corrosion.

3. Fatigue, caused by the pulling, bending, crushing or kinking forces applied to the rope during normal service.

None of the above causes of deterioration can be eliminated entirely. However, all three can be minimized, thus insuring the longest possible safe service life from the rope.

INSPECTION. The first step toward the proper care of wire rope is an inspection schedule. All wire rope used in critical service (lifting of loads, etc.) should be inspected on a regular periodic basis, preferably at least weekly. This inspection should be aimed at determining the degree of deterioration at the worst rope lay, since this will determine the suitability for continued service. By definition, a rope lay is the axial distance along the rope in which one strand makes one complete turn around the rope. The inspector should pay particular attention to the following:

1. Internal wear caused by grit penetrating between the strand and wires.

2. Kinking.

Toth 00667

3. Lubrication.

4. Corrosion.

5. Number of broken strand per lay.

6. The manner in which the fittings are attached.

7. The condition of the sheaves over which the rope must pass, including sheave alignment.

8. The amount of wear on the outer wires.

Any evidence of serious rope deterioration from corrosion should cause consideration to be given to replacing the rope. More than one broken wire in any one strand should be cause for caution. Breaks occurring in the valley between adjacent strands are generally a warning of an abnormal condition, justifying caution.

Any of the following conditions should cause the inspector to question the remaining strength of a rope, and to give consideration to the possibility of discarding the rope.

1. If the core shows through more than one pair of strands.

2. Kinking damage is severe.

3. Evidence of improper lubrication, combined with other defects.

4. Wire that has come in contact with an electrical circuit or that has been subjected to overheating.

5. Serious reduction in rope diameter.

6. Evidence of "bird-caging". This increased diameter is usually caused by the sudden releasing of a heavy load while the rope is twisted.

7. Any broken wires at the dead end of a cable should be cause for cutting off a section. Preferably at least three feet beyond the broken wires. Refasten or resocket the rope.

8. Numerous broken wires or as many as three adjacent broken wires in one rope lay.

UNREELING WIRE ROPE. When unreeling wire rope, it is imperative that the coil or reel rotates as the rope unwinds. If the coil or reel does not rotate, the wire will be twisted as it is uncoiled, and kinking will result. A kinked rope is severly damaged, and unsafe for maximum service. Figure 8-9 shows the correct method for unreeling rope from coils or reels. Another acceptable method of reeling rope off is to place a shaft through the center of the reel and support the shaft so the reel can revolve as the rope is pulled off. If this method is used, the reel should not be allowed to revolve so rapidly that is "throws" rope off. Reel rope off slowly.

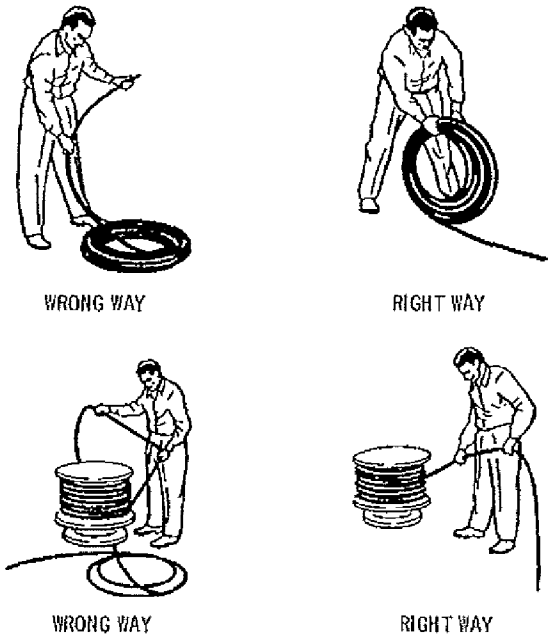

Figure 8-9. Unreeling Wire Rope

Kinking is caused by the rope taking a spiral shape as the result of an unnatural twist in the rope. One of the most common causes for this twist is improper unreeling and uncoiling as illustrated. Figure 8-10 shows the progressive stages of a kink, and the end result.

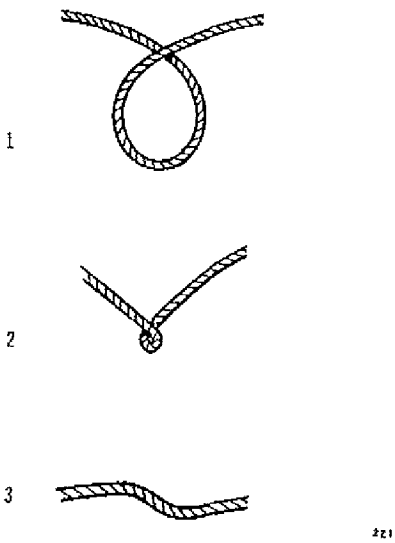

Figure 8-10. Kinking of Wire Rope

Toth 00668

Part 1 of the illustration shows the beginning of a kink. At this stage, no harm will be done if the loop is immediately thrown out to prevent further kinking.

Part 2 of the illustration shows the effect of the application of a load to a kinked rope. The rope has been seriously strained and is no longer safe for maximum service.

Part 3 shows the condition of the rope in part 2 after the kink has been straightened out. Strands and wires are out of position. This creates unequal tension and strain and will cause excessive additional wear on the damaged areas.

CUTTING WIRE ROPE. When wire rope is to be cut, seizings must be placed on each side of the place where the rope is to be cut, to prevent unlaying of the strands. On preformed wire rope, one seizing on each side of the cut is usually considered to be sufficient. On non-preformed wire ropes less than 7/8 inch in diameter, two seizings are recommended. On non-preformed wire rope over 7/8 inch in diameter, three seizings are recommended.

Three basic methods are recommended for cutting wire rope. They are:

1. Abrasive cutting tools. A suitable abrasive cutting machine will do the job quickly and easily.

2. Shearing tools. Wire cutters can be used to cut through smaller ropes, while special blade-action tools and a hammer are used for larger sizes.

3. Flame. Welding equipment can be used to burn cuts through wire rope.

NOTE

Additional information on the care and inspection of wire rope can be obtained free of charge from most wire rope manufacturers. This is a complex subject, since it deals with a question to which there is no definite answer; namely, when will a rope break.

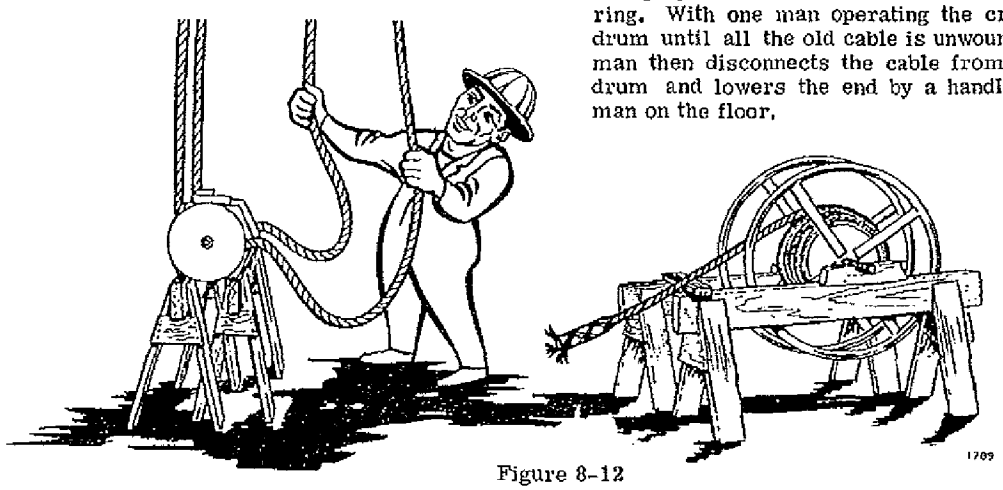

Figure 8-12

For the sake of safety, a rope should be discarded when, in the opinion of a qualified inspector, it is no longer safe for the service to which it is assigned. It is suggested that the person assigned to inspect wire rope used in critical applications contact a rope manufacturer for further information on the subject.

Table 8-1 illustrates the cross-sections of various types of wire rope recommended for use on P&H overhead cranes, and Table 8-2 shows the breaking strength and weight per foot on the various types of wire rope.

CABLE REPLACEMENT

Figures 8-11 through 8-17 illustrate the method P&H has developed for replacement of crane cable. Although Figures 8-11 through 8-17 show an auxiliary bottom block with 4 part reeving, large blocks with as many as 12 part reeving are handled as easily.

1. Lower the bottom block onto horses or other support to hold it in an upright position.

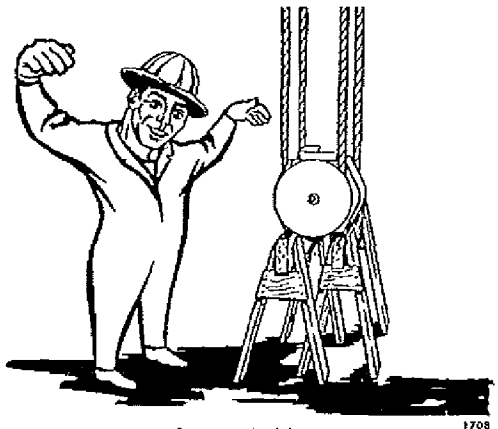

Figure 8-11

2. Slip the coil of new cable over the hub of a cable changing reel which has a removable top flange or ring. With one man operating the crane, rotate the drum until all the old cable is unwound. The second man then disconnects the cable from one end of the drum and lowers the end by a handline to the third man on the floor.

Toth 00669

3. The man on the floor connects the ends of the old and new cables by means of a braided wire splicer which locks in, pulling like the old familiar Japanese finger traps.

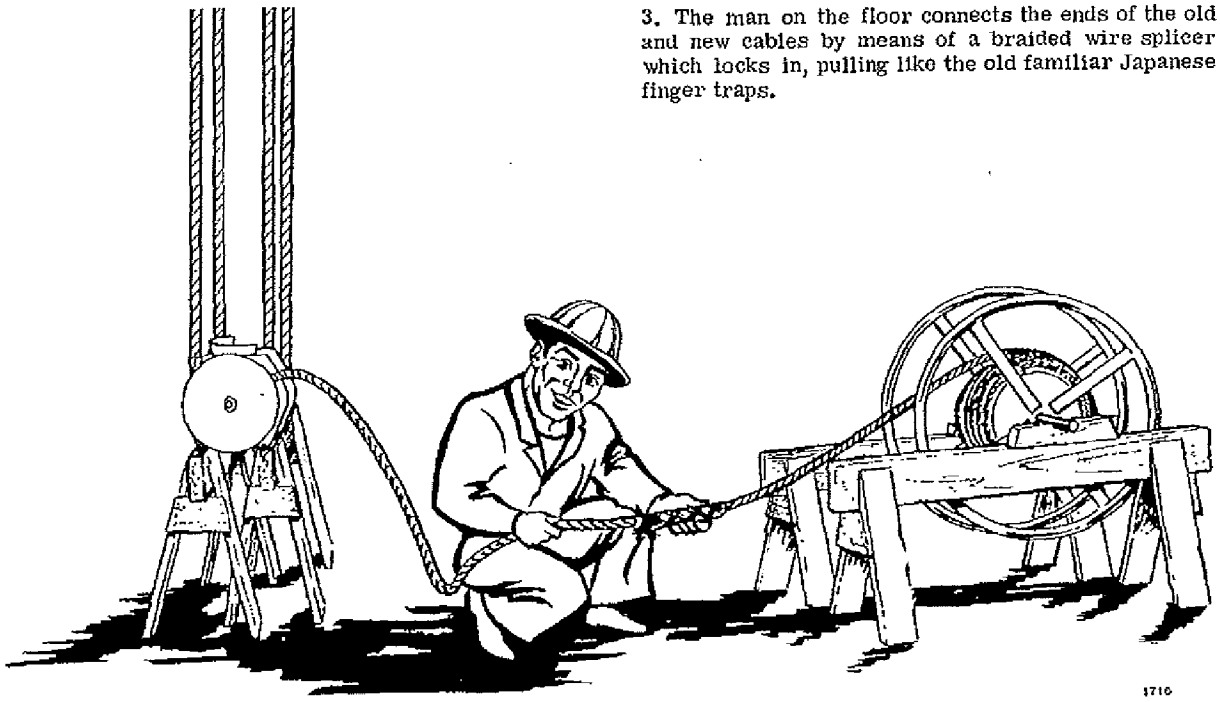

Figure 8-13

4. The crane operator winds up the old cable slowly, pulling the new cable through all the sheaves, equalizers, etc.

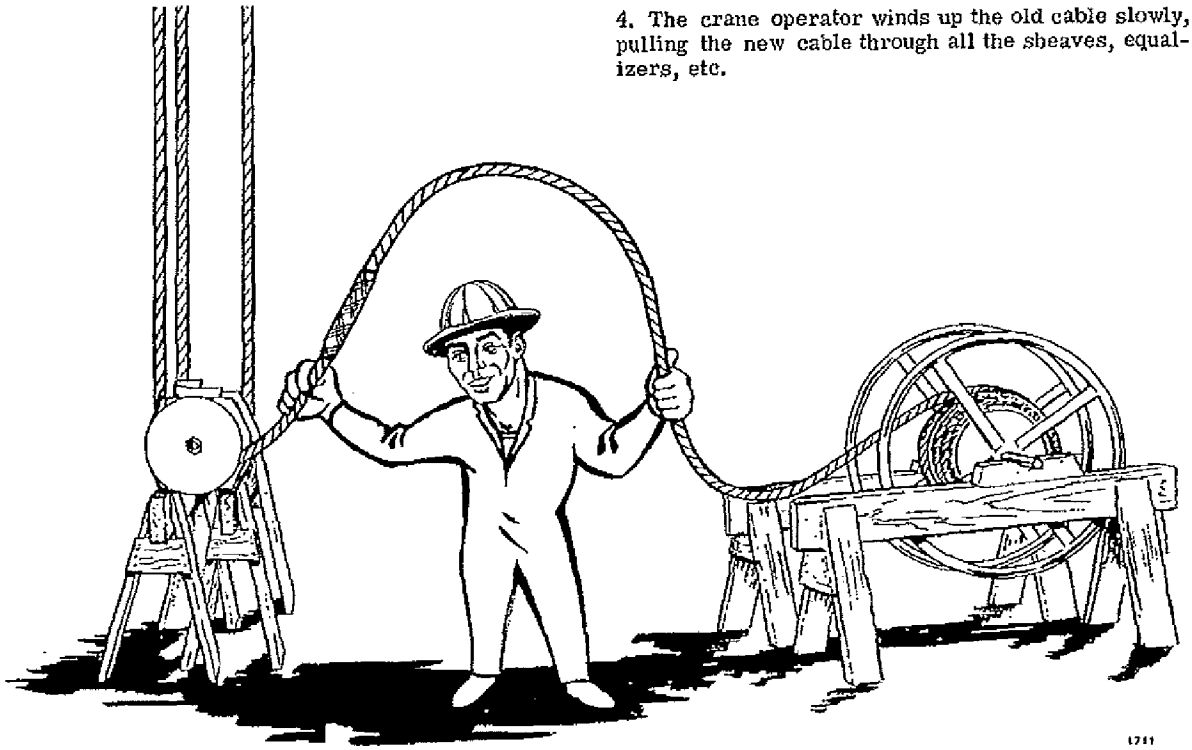

Figure 8-14

Toth 00670

5. Note the union of the old and new cables after passing through the bottom block on way to drum. After the old cable is completely rewound, the man at the drum disconnects the new cable and temporarily fastens the end.

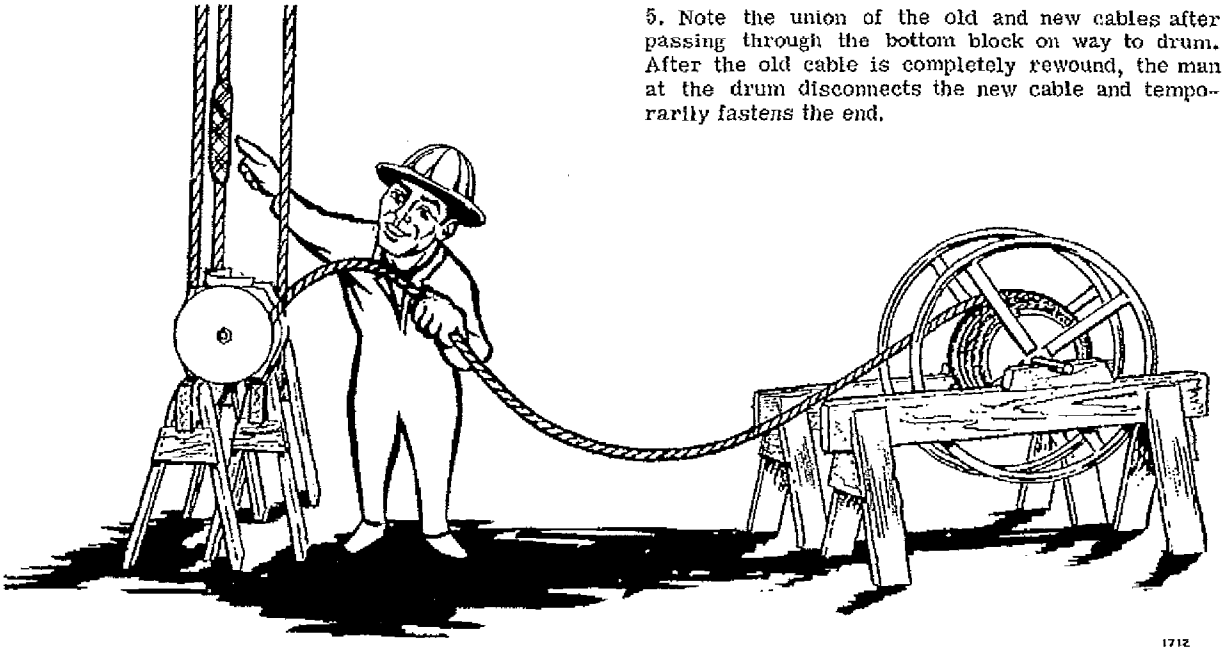

Figure 8-15

6. Now lower the end of the old cable. The floor man attaches it to the reel which he turns manually to take up the old cable as the drum unwinds.

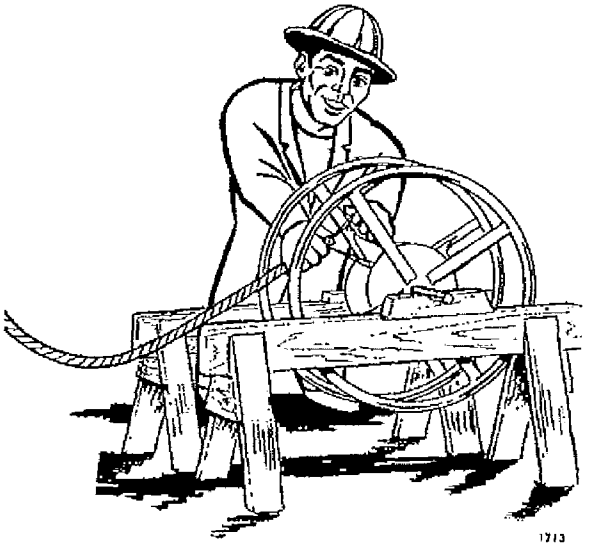

Figure 8-16

7. When all the old cable is on the reel, tie it and remove the coil. Attach both ends of the new cable to complete the job.

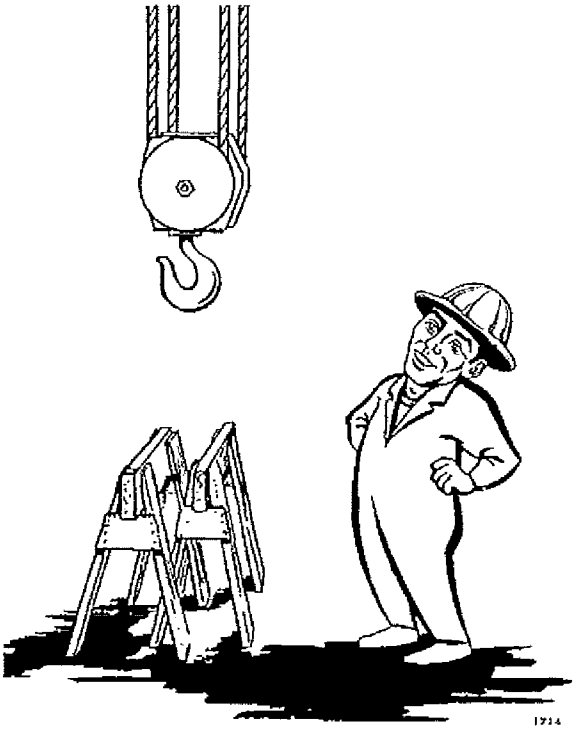

Figure 8-17

Toth 00671

Table 8-1. Wire Rope Types

TYPE - 2 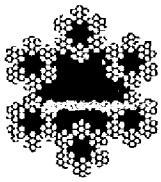 6 x 42 Preformed Iron Tiller Rope	TYPE - 12 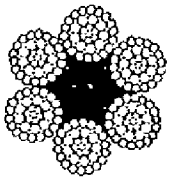 6 x 37 With F.W. Preformed Improved Plow Steel Wire Rope Fibre Core
TYPE - 4 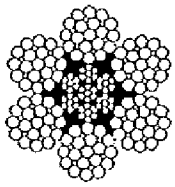 6 x 25 With F.W. Preformed Improved Plow Steel Wire Rope 7 x 7 I.W.R.C.	TYPE - 14 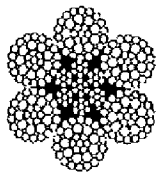 6 x 37 With F.W. Preformed Improved Plow Steel Wire Rope Right Lay - Lang Lay 7 x 7 I.W.R.C.
TYPE - 4A 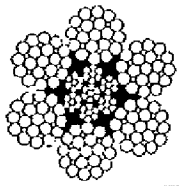 Same as Type 4 Except to be Right Lay - Lang Lay	TYPE 14 A 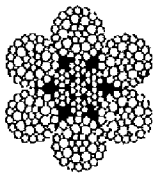 Same as Type 14 Except to be Right Lay - Regular Lay
TYPE - 9 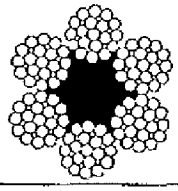 6 x 25 With F.W. Preformed Improved Plow Steel Wire Rope Fibre Core	TYPE - 18 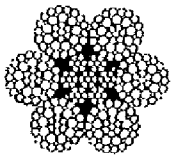 6 x 37 Type With F.W. Extra High Strength Preformed Steel Wire Rope 7 x 7 I.W.R.C.
TYPE - 11 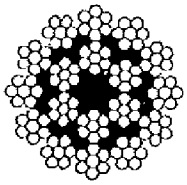 18 x 7 Non-Rotating Preformed Improved Plow Steel Wire Rope Fibre Core	TYPE 25 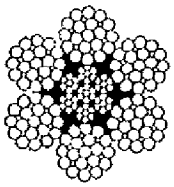 6 x 25F I.W.R.C. Preformed Extra Improved Plow Steel Wire Rope (Filler Wire)

F.W. - Filler Wire

I.W.R.C. - Independent Wire Rope Core

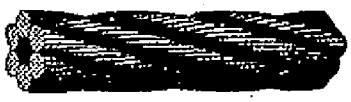

RIGHT LAY - REGULAR LAY



RIGHT LAY - LANG LAY

ALL TYPES OF WIRE ROPE LISTED IN RIGHT LAY - REGULAR LAY
EXCEPT TYPES 4A & 14 - PREFORMED RIGHT LAY - LANG LAY

Toth 00672

Table 8-2. Wire Rope - Strength - Weight

BREAKING STRENGTHS AND WEIGHTS

P&H TYPE NO.	BRKG. STR. TONS / WT/FT. IN LBS.	ROPE DIAMETER																	
		3/16	1/4	5/16	3/8	7/16	1/2	9/16	5/8	3/4	7/8	1	1-1/8	1-1/4	1-3/8	1-1/2	1-5/8	1-3/4	1-7/8	2
TYPE 2	BRKG. STR. TONS	.330	.584	.908	1.30	1.77	2.30	2.90	3.57	5.11	6.92	9.00								
	WT./FT. IN LBS.	.039	.070	.110	.160	.210	.280	.350	.430	.620	.840	1.10								
TYPE 4 & 4A	BRKG. STR. TONS	1.67	2.94	4.58	6.56	8.89	11.5	14.5	17.9	25.6	34.6	44.9	56.5	69.4	83.5	98.9	115.	133.	152.	172.
	WT./FT. IN LBS.	.065	.110	.180	.250	.340	.440	.560	.690	.990	1.35	1.76	2.23	2.75	3.33	3.96	4.65	5.39	6.14	7.04
TYPE 9	BRKG. STR. TONS	1.55	2.74	4.26	6.10	8.27	10.7	13.5	16.7	23.8	32.2	41.8	52.6	64.6	77.7	92.0	107.	124.	141.	160.
	WT./FT. IN LBS.	.050	.100	.160	.230	.310	.400	.510	.630	.900	1.23	1.60	2.03	2.50	3.03	3.60	4.23	4.90	5.63	6.40
TYPE 11	BRKG. STR. TONS	1.42	2.51	3.90	5.59	7.58	9.85	12.4	15.3	21.8	29.5	38.3	48.2	59.2	71.3	84.4	98.4	114.		
	WT./FT. IN LBS.	.061	.108	.169	.240	.330	.430	.550	.680	.970	1.32	1.73	2.19	2.70	3.27	3.89	4.57	5.30		
TYPE 12	BRKG. STR. TONS		2.59	4.03	5.77	7.82	10.2	12.9	15.8	22.6	30.6	39.8	50.1	61.5	74.1	87.9	103.	119.	136.	154.
	WT./FT. IN LBS.		.100	.160	.220	.300	.390	.490	.610	.870	1.19	1.55	1.96	2.42	2.93	3.49	4.09	4.75	5.45	6.20
TYPE 14 & 14A	BRKG. STR. TONS		2.78	4.33	6.20	8.41	11.0	13.9	17.0	24.3	32.9	42.8	53.9	66.1	79.7	94.5	111.	128.	146.	165.
	WT./FT. IN LBS.		.110	.180	.242	.330	.430	.540	.670	.960	1.31	1.71	2.16	2.66	3.22	3.84	4.50	5.23	6.00	6.82
TYPE 18	BRKG. STR. TONS		3.20	4.98	7.14	9.67	12.6	15.9	19.6	27.9	37.8	49.1	61.9	76.1	91.7	108.	127.	146.	168.	190.
	WT./FT. IN LBS.		.116	.180	.260	.350	.460	.590	.720	1.04	1.42	1.85	2.34	2.89	3.50	4.16	4.88	5.67	6.50	7.39
TYPE 25	BRKG. STR. TONS		3.40	5.27	7.55	10.2	13.3	16.8	20.6	29.4	39.8	51.7	65.0	79.9	96.0	114.	132.	153.	174.	198.
	WT./FT. IN LBS.		.116	.180	.260	.350	.460	.590	.720	1.04	1.42	1.85	2.34	2.89	3.50	4.16	4.88	5.67	6.50	7.39
TYPE 2																				
TYPE 4																				
TYPE 4A																				
TYPE 9																				
TYPE 11																				
TYPE 12																				
TYPE 14																				
TYPE 14A																				
TYPE 18																				
TYPE 25																				

Toth 00673

INSPECTION AND MAINTENANCE OF BOTTOM BLOCK ASSEMBLIES

The following points should be kept in mind when inspecting and maintaining the bottom block assemblies:

1. All sheave grooves must be smooth to prevent possible damage to the wire rope. Clean up any rough areas and any sharp or burred edges.

2. Make sure that all sheaves rotate freely. If a sheave binds on a sheave pin, the wire rope will be dragged through the sheave groove and damage to the wire rope and/or sheave may result.

3. Make sure all sheave pins are securely retained in position.

4. Make sure the hook nut retaining bolt is in place and securely tightened.

5. Replace the hook nut immediately if it shows any signs of wear or damage.

6. Check the hook safety latch for proper operation.

7. Clean up any rough areas and any sharp edges on the sheave frame.

8. At least annually, the crane hook should be inspected for cracks by the Magnetic Particle, or other suitable crack testing inspection methods, to determine that no cracks are discernible. A 15 per cent increase in the throat measurement of the hook or a 10 per cent bend in the hook shall also be considered reason for replacement.

9. Refer to SECTION V, GENERAL MAINTENANCE when removing, cleaning, inspecting, and reassembling a bottom block assembly.

MAGNET CABLE REELS

Magnet cable reels are used on cranes using lifting magnets or electrically operated buckets to take-up and pay-out the electrical conductor cable. Magnet cable reels are power driven or of the spring take-up type.

Refer to the manufacturer's literature in the master parts books for information on the maintenance, lubrication, and inspection of the spring take-up type of magnet cable reel.

Power driven magnet cable reels are connected to the hoist drive mechanism, and are designed to take-up and pay-out at about 95 per cent of magnet hoist speed.

Toth 00674

SECTION IX
MOTOR BRAKES

INTRODUCTION

Motor brakes are grouped under three basic types: electric, hydraulic, and electric-hydraulic.

NOTE

This section does not cover the P&H types SBE, SBEM and SBM brakes. Refer to P&H ED Bulletins ED-12, ED-13 and ED-14, respectively, for information on these brakes.

Brakes are an important factor in the safe operation of a crane. Therefore, it is recommended that a periodic preventive maintenance and inspection schedule be set up for the motor brakes.

All brakes must be inspected weekly and adjusted, if necessary, to ensure that they operate properly. This interval assumes a normal 8 hour work day. The proper maintenance and adjustment procedures are described in this section.

CAUTION

Before adjusting any portion of any electric hoist brake, lower the bottom block and/or load to the floor, and lock open the crane power supply disconnect switch.

ELECTRIC BRAKES

SHOE BRAKE

DESCRIPTION. The shoe type electric brake is spring set - electrically released. Operating the motion control device associated with a crane motion closes the circuit which applies power to both the motor and brake coil. See Figure 9-1.

Returning the motion control device to the OFF position opens the circuit to both the motor and brake coil, and the spring sets the brake.

ADJUSTMENT. The shoe brake has three adjustments: torque spring, magnetic air gap, and shoe equalization. To adjust the brake, proceed as follows:

1. The torque spring adjustment is accomplished by loosening locknut (2, Figure 9-1), and turning the ad-

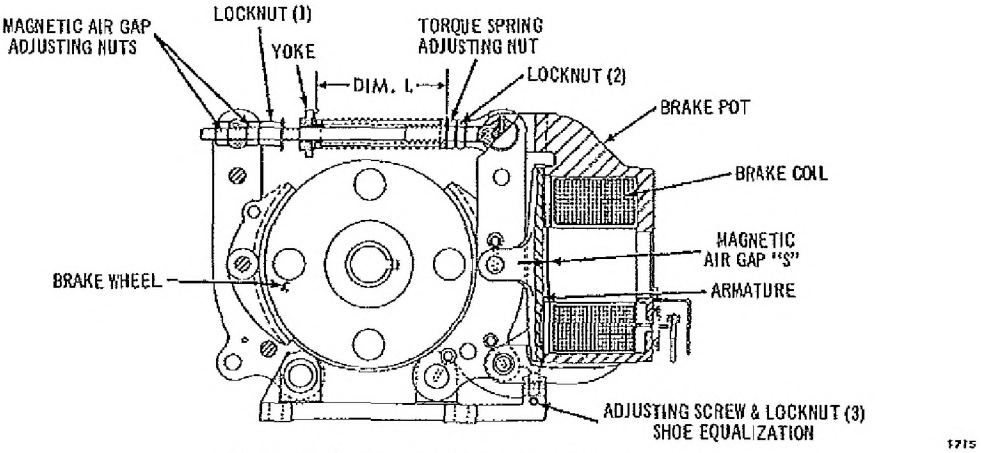

Figure 9-1. Shoe Brake - Adjustment

Toth 00675

Table 9-1. "L" Dimensions for CD and CDH Shoe Brakes

BRAKE NUMBER	ORIGINAL LINING THICKNESS	LINING PRESSURE AT RATED TORQUE LBS/IN.	"L" DIMENSION
8-CD (CDH)-100	1/4	18.3	4-9/16
10-CD (CDH)-200	3/8	20.3	5-31/32
13-CD (CDH)-550	3/8	21.5	8-5/32
16-CD (CDH)-1000	1/2	21.6	7-27/32
19-CD (CDH)-2000	1/2	23.7	11-3/32
23-CD (CDH)-4000	1/2	25.0	12-11/16

Note: The "Brake Number" consists of three parts: the prefix which indicates the brake wheel diameter; the type brake (either type CD or CDH); and the suffix which indicates the torque rating for 1/2 hour foot pounds.

justing nut until spring length "L" is obtained. See Table 9-1. Tighten the locknut. The brake torque can be reduced by increasing the spring length. The spring length must not be shorter than the length shown in Table 9-1.

2. The air gap adjustment is accomplished by loosening locknut (1), and turning the two adjusting nuts until air gap "S" is 3/64 of an inch. Tighten locknut (1) against the adjusting nuts. Check the air gap at point "S", Figure 9-1. The air gap shall not exceed 3/32 of an inch at any time.

3. The shoe equalization adjustment is accomplished by backing off air gap locknut (1) and tightening it against the yoke until the air gap "S" is closed. Loosen shoe equalization locknut (3) and turn the adjusting screw until equal clearance is obtained between both shoes and the brake wheel. Tighten locknut (3) and check the clearance to be sure that the adjustment did not change when tightening the locknut. Tighten locknut (1) against the adjusting nut.

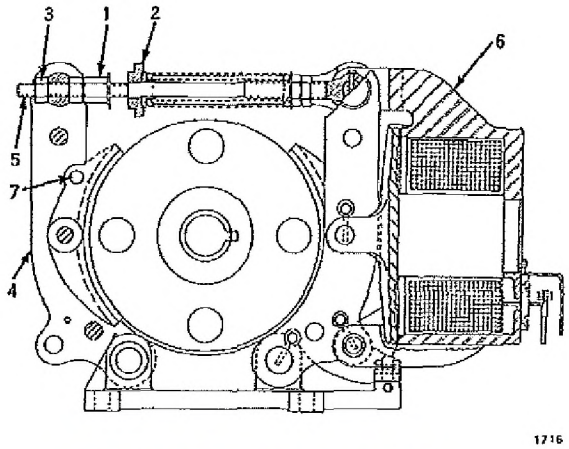

Figure 9-2. Shoe Brake - Friction Lining Replacement

MAINTENANCE. The brake friction linings must be replaced when they are worn to approximately one half of the original thickness shown in Table 9-1. The determining factor as regards replacement, is to prevent brake wheel damage due to contact between the brake wheel and rivet heads. To replace the brake linings, proceed as follows:

1. Loosen locknut (1, Figure 9-2) and tighten the locknut against yoke (2) until air gap "S" is closed.

2. Remove nut (3) and swing brake jaw (4) outward to disengage torque rod (5). Swing the torque rod over brake pot (6).

3. Then remove the brake shoe assembly through the top of the brake jaw. Care must be taken not to loosen friction plugs (7) and the spring in the brake shoe assembly. Replace the brake linings.

4. Replace the brake shoes and reassemble the brake in the reverse order of disassembly. Adjust the brake as described under the topic ADJUSTMENT.

The shoe type brakes are equipped with pins and bushings at the various pivot points. The pins and bushings must be replaced as soon as they show signs of wear.

CAUTION

Block up the brake pot before starting to disassemble the brake, so that it will not drop and cause injury or damage.

Toth 00676

DISC BRAKE

DESCRIPTION. The disc type electric brake is spring set - magnetically released. Operating the motion control device associated with a crane motion closes the circuit which applies power to both the motor and brake coil. See Figure 9-4.

Energizing the brake coil pulls armature (9), compressing spring (7), thus releasing the brake.

Returning the motion control device to the OFF position opens the circuit to both the motor and brake coil, and the spring sets the brake.

ADJUSTMENT. The brake must be properly adjusted to release when power is applied and to stop the motion when the power is shut off. At least once every month inspect the brake to determine if adjustment is necessary. Adjust as follows: (See Figure 9-3.)

1. Loosen the locknuts.

2. Turn the adjusting nuts until the air gap "S" is 1/32 of an inch.

3. Tighten the locknuts and check air gap "S". Readjust if necessary.

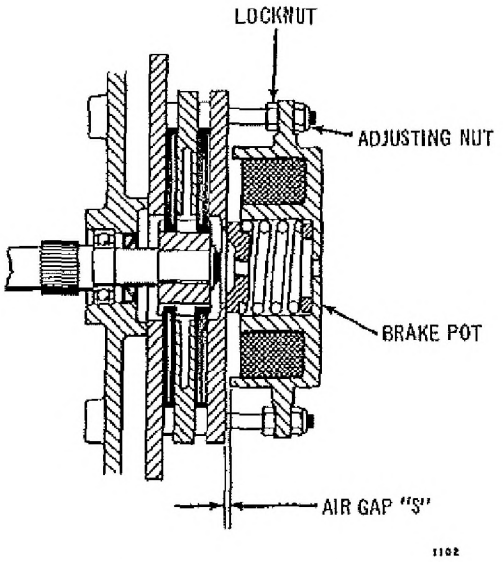

Figure 9-3. Disc Brake Adjustment

DISASSEMBLY. To disassemble the brake, proceed as follows:

1. Remove brake cover (5, Figure 9-4).

2. Disconnect the leads to magnetic brake pot (6).

3. Insert a 1/2-13 UNC bolt through the opening in the end of the brake pot and thread it into spring guide (4). Tighten the bolt a few turns to relieve spring pressure on armature (9) and to ensure that the spring guide is firmly retained by the bolt.

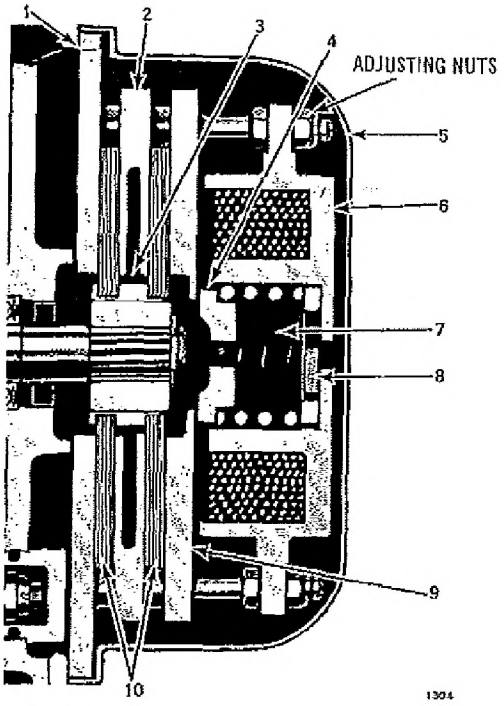

Figure 9-4. Disc Brake Assembly

4. Remove the three adjusting nuts and lockwashers from the brake pins and slide the magnetic brake pot off of the pins.

5. Remove armature (9), disc type brake linings (10), disc plate (2) and back plate (1).

NOTE

If it is necessary to remove spring guide (4), compression spring (7) and spring spacer (8) from the brake pot, set the brake pot on a work bench with the spring guide towards the bench. Hold the brake pot down with one hand while slowly removing the bolt which was inserted in step three. Slowly allow the brake pot to rise as the spring extends.

INSPECTION. The following items should be inspected after the brake has been disassembled:

1. The friction discs must be clean and free of oil, and must not be excessively worn. When the discs have worn to approximately 3/16 inch they must be replaced.

Toth 00677

2. Inspect the friction discs, armature, and disc plates for warping, and replace if necessary.

REASSEMBLY. Reassemble the brake in the reverse order of disassembly.

HYDRAULIC BRAKES

SHOE BRAKES

DESCRIPTION. The shoe type hydraulic brake is spring released - hydraulically applied. Depressing the pedal on the master cylinder pumps hydraulic fluid to the wheel cylinder on the brake, applying the brake.

The shoe type hydraulic brakes have two different configurations which are designated as the type CH and DH. The operation of both is the same and the maintenance and adjustment for both is described below.

CH BRAKE ADJUSTMENT. The CH brake has two adjustments, one to compensate for brake lining wear and the other for shoe equalization.

1. The brake lining adjustment is accomplished by loosening locknut (2), and turning nuts (1 and 3) until 0.020 inch is obtained between each brake shoe and the brake wheel at the pivot point of the brake shoes. Tighten locknut (2) and check the adjustment to be sure that the adjustment did not change when tightening the locknut.

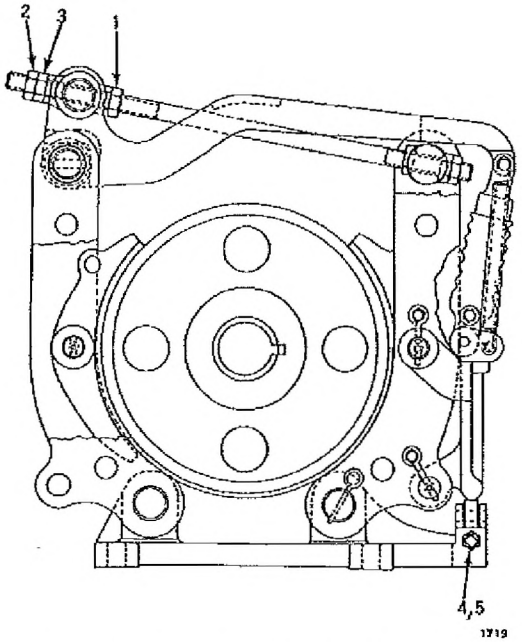

Figure 9-5. CH Shoe Brake Adjustment

2. The shoe equalization adjustment is accomplished by backing off locknut (4) and turning adjusting screw (5) until equal clearance is obtained between both shoes and the brake wheel. Tighten the locknut and check the clearance to be sure the adjustment did not change when tightening the locknut.

DH BRAKE ADJUSTMENT. The DH brake is self-adjusting and does not require any adjustments during normal operation. However, the brake must be adjusted whenever it has been disassembled. Adjust the brake as follows: (See Figure 9-6.)

1. Loosen the locknut and turn the adjusting nuts until approximately 0.020 inch is obtained between each brake shoe and the brake wheel at the pivot point of the brake shoe. Tighten the locknut and check the clearance to be sure the adjustment did not change when tightening the locknut.

MAINTENANCE. The procedure for replacing the brake linings for both the DH and CH brake is described below.

To replace the brake linings of the CH brake, proceed as follows:

1. Remove nuts (2 and 3, Figure 9-5), swing the brake jaws outward, and disengage torque rod (6).

2. Remove the brake shoes and replace the linings.

3. Readjust the brake.

NOTE

It may be necessary to back off the shoe equalization adjusting screw (5) to allow the brake jaws to open.

To replace the brake linings of the DH brake, proceed as follows:

1. Remove the locknut and adjusting nut. Swing the brake jaws outward and disengage the torque rod. See Figure 9-6.

2. Remove the brake shoes and replace the linings.

3. Readjust the brake.

DISC BRAKE

DESCRIPTION. The disc type hydraulic brake is spring released - hydraulically applied. Depressing the pedal on the master cylinder pumps hydraulic fluid to the brake cylinder, applying the brake. See Figure 9-7.

ADJUSTMENT. The brake must be kept properly adjusted at all times. To adjust the brake, proceed as follows:

1. Remove the cover.

Toth 00678

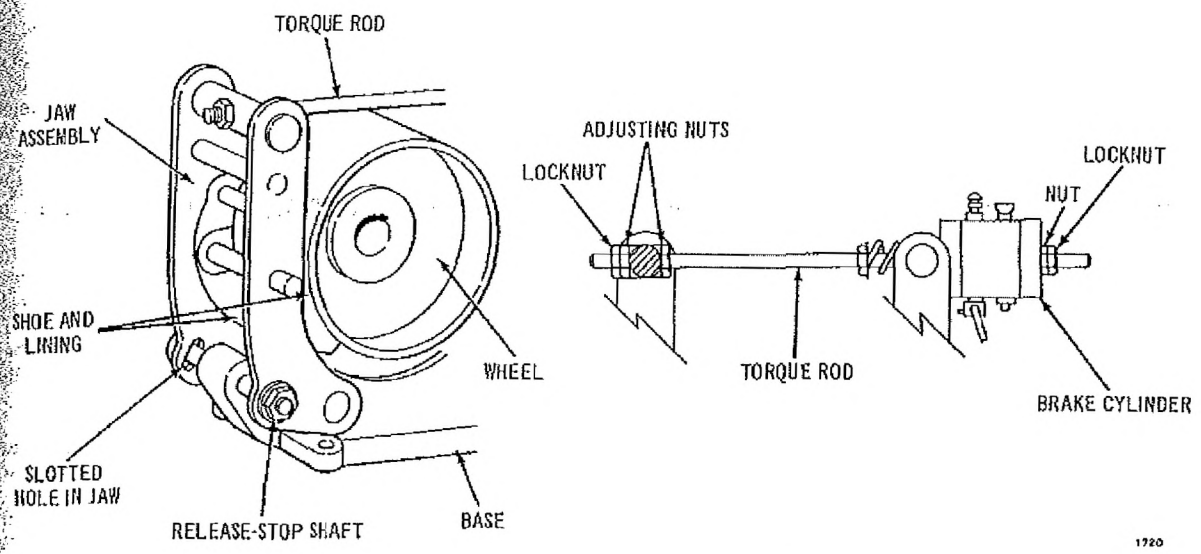

Figure 9-6. DH Shoe Brake Adjustment

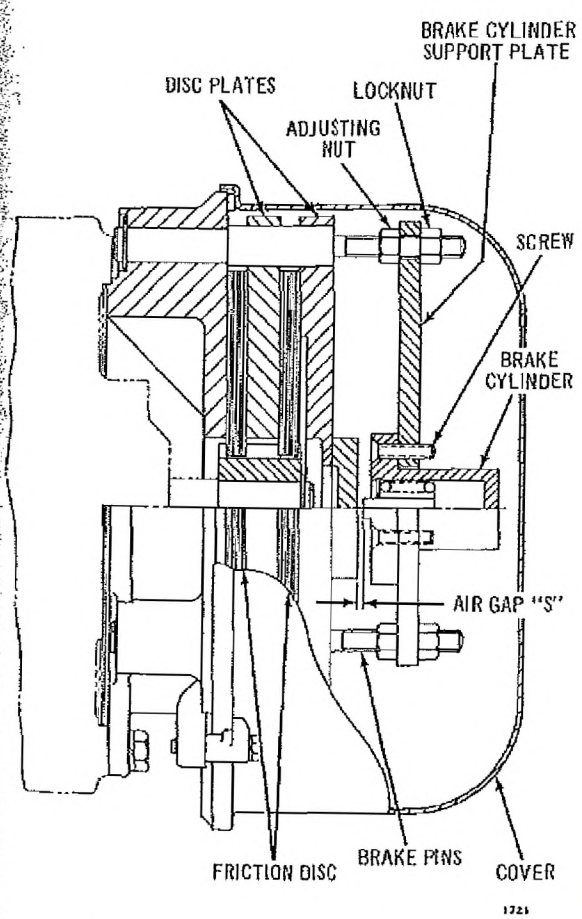

Figure 9-7. CH Disc Brake Assembly

2. Loosen the locknuts. Push the disc plates and friction discs away from the brake cylinder by hand and turn the adjusting nuts until the air gap "S" is 0.040 inch.

3. Tighten the locknuts and check air gap "S". Readjust if necessary.

DISASSEMBLY. To disassemble the brake, proceed as follows:

1. Remove the brake cover.

2. Disconnect the hydraulic line to the brake cylinder.

CAUTION

Cap the hydraulic line to prevent loss of or contamination of the hydraulic fluid.

3. Remove the locknuts. Remove the brake cylinder support plate with the brake cylinder. The brake cylinder can be removed by removing the screws which attach the cylinder to the support plate.

4. Remove the adjusting nuts and slide the disc plates and friction discs from the brake pins.

INSPECTION. The following items should be inspected after the brake has been disassembled:

1. The friction discs must be clean and free of oil, and must not be excessively worn. When the discs have worn to approximately 3/16 inch they must be replaced.

Toth 00679

2. Inspect the friction discs and disc plates for warping and replace if necessary.

REASSEMBLY. Reassemble the brake in the reverse order of disassembly.

ELECTRIC-HYDRAULIC BRAKES

SHOE BRAKE

DESCRIPTION. The shoe type electric-hydraulic brake is a combination of the electric and hydraulic brakes. This brake serves two functions, parking brake and service brake.

The parking brake portion of this brake is spring set - electrically released. Energizing the crane applies power to both the crane controls and the brake coil, releasing the brake. The parking brake will remain in the released position as long as power is applied.

The service brake portion of this brake is spring released - hydraulically applied. Depressing the pedal on the master cylinder pumps hydraulic fluid to the wheel cylinder, applying the brake.

ADJUSTMENT. The shoe brake has three adjustments: torque spring, magnetic air gap, and shoe equalization. To adjust the brake, proceed as follows: (See Figure 9-8.)

1. The torque spring adjustment is accomplished by loosening locknut (2) and turning the adjusting nut until spring length "L" is obtained. See Table 9-1. Tighten the locknut. The brake torque can be reduced by increasing the spring length. The spring length must not be shorter than the length shown in Table 9-1.

2. The air gap adjustment is accomplished by loosening locknut (1), and turning the adjusting nut until air gap "S" is 3/64 inch. Tighten the locknut. Tighten the hydraulic return spring nut sufficiently so that the hydraulic fluid is pumped back to the master cylinder. Check the air gap at point "S," Figure 9-8. The air gap shall not exceed 3/32 inch at any time.

3. The shoe equalization adjustment is accomplished by backing off the adjusting nut closest to the yoke, and tightening it against the yoke until air gap "S" is closed. Loosen shoe equalization locknut (3), and turn the adjusting screw until equal clearance is obtained between both shoes and the brake wheel. Tighten locknut (3) and check the clearance to be sure that the adjustment did not change when tightening the locknut. Return the adjusting nut from the yoke to its original position.

MAINTENANCE. The brake friction linings must be replaced when they are worn to approximately one half of the original thickness shown in Table 9-1. The determining factor as regards replacement, is to prevent brake wheel damage due to contact between the wheel and rivet heads. To replace the brake linings, proceed as follows:

1. Loosen the adjusting nut closest to the yoke, and tighten it against the yoke until air gap "S" is closed.

2. Remove locknut (1) and the adjusting nut. Remove the wheel cylinder, swing the brake jaws outward, and disengage the torque rod.

3. Then remove the brake shoe assembly through the top of the brake jaw. Care must be taken not to loosen the friction plugs and spring in the brake shoe assembly. Replace the brake linings.

4. Replace the brake shoes and reassemble the brake in the reverse order of disassembly. Adjust the brake as described under the topic ADJUSTMENT.

DISC BRAKE

GENERAL. The operation of the disc type electric-hydraulic brake is generally the same as described for the shoe type electric-hydraulic brake. See Figure 9-9.

ADJUSTMENT. To adjust the brake, proceed as follows:

1. Remove the brake cover.

2. Back off the locknuts on the brake pins, and turn the adjusting nuts until air gap "S" is 1/32 of an inch.

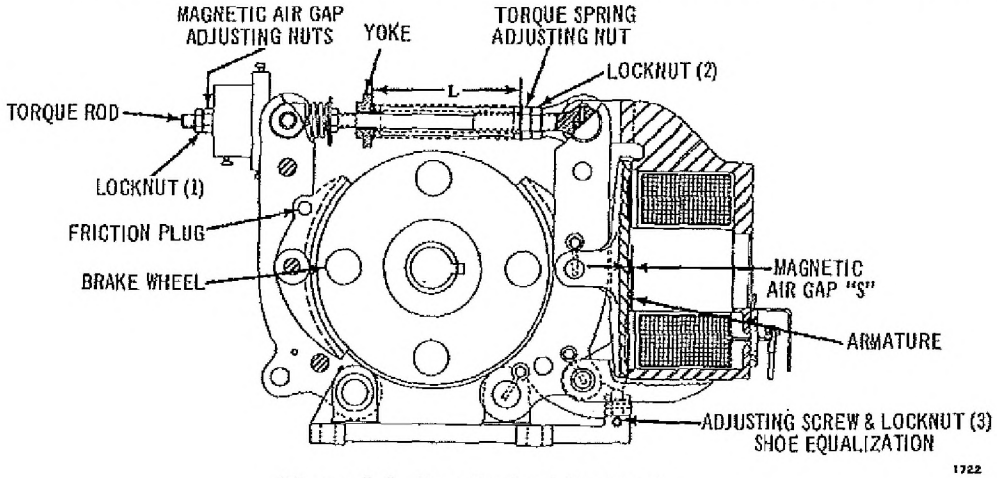

Figure 9-8. Shoe Brake Adjustment

Toth 00680

3. Tighten the locknuts, and check the air gap to be sure the adjustment did not change when tightening the locknuts.

DISASSEMBLY. To disassemble the brake, proceed as follows:

1. Remove the brake cover. See Figure 9-9.

2. Remove the hydraulic hose to the brake cylinder, and disconnect the electrical leads to the brake coil.

CAUTION

Cap the hydraulic line to prevent loss of or contamination of the hydraulic fluid.

3. Install a 1/2" x 10-24 capscrew in the brackets on each side of the brake pot. Tighten the capscrews to ensure that the armature is firmly retained by the capscrews.

4. Remove the adjusting nuts and lockwashers. Remove the brake pot assembly.

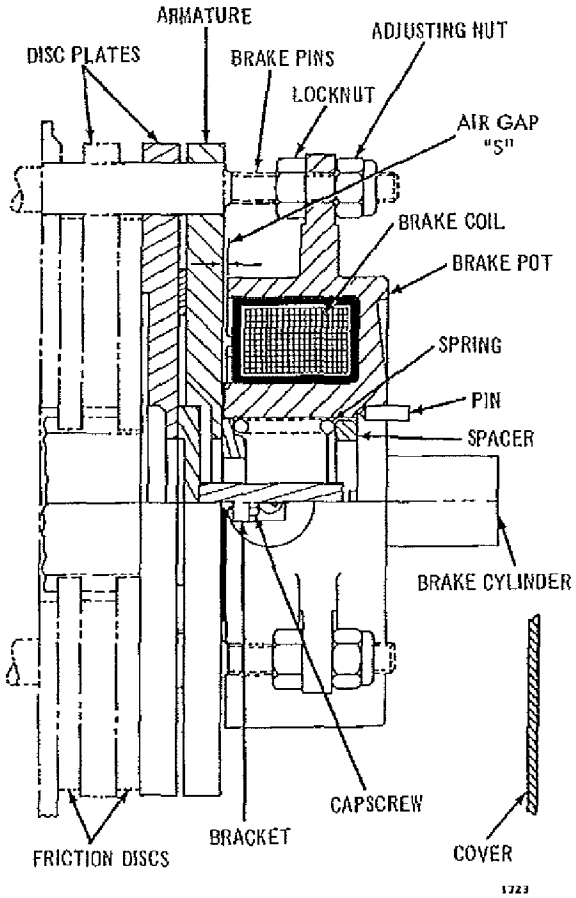

Figure 9-9. Disc Brake Assembly

5. To disassemble the brake pot assembly, proceed as follows:

A. Place the brake pot assembly on a work bench with the armature against the bench.

B. Hold the assembly down by hand, slowly remove the capscrews, and allow the assembly to raise.

C. Remove the spring and spacer.

D. Remove the pin and unscrew the brake cylinder.

6. Remove the locknuts and slide the disc plates and friction discs from the brake pins.

INSPECTION. The following items should be inspected after the brake has been disassembled:

1. The friction discs must be clean and free of oil, and must not be excessively worn. When the discs have worn to approximately 3/16 inch they must be replaced.

2. Inspect the friction discs, disc plates and armature for warping and replace if warped.

REASSEMBLY. The brake is reassembled in the reverse order of disassembly.

HYDRAULIC SYSTEM

GENERAL MAINTENANCE

The following points should be kept in mind when working on the hydraulic system:

1. Tolerances of working parts in hydraulic systems are very close. Even small amounts of dirt or foreign material in hydraulic systems can cause wear or damage to the components and cause generally faulty operation of the system. Every precaution must be taken to assure absolute cleanliness of the hydraulic system and fluid.

2. Whenever the system is drained, the system should be flushed and new hydraulic fluid of the type originally used, added as required.

3. All containers and funnels used for hydraulic fluid must be clean. Use a funnel with a 200 mesh screen for filling the hydraulic fluid reservoir.

4. Never mix fluids of different types or brands. See SECTION IV for hydraulic fluid specifications.

5. Whenever there is a hydraulic system component failure which gives reason to believe that there are metal particles or other foreign material in the system, drain and flush the entire system. Refill the system with clean hydraulic fluid.

Toth 00681

6. All hydraulic connections must be kept tight to prevent leakage.

7. When removing any hydraulic component, be sure to cap the hydraulic line and plug the ports of the removed component.

8. All hydraulic components must be disassembled and assembled in clean surroundings. During disassembly, pay particular attention to the identification of parts for proper assembly. Clean all metal parts in clean denatured alcohol and rinse in hydraulic fluid before reassembly. Be sure to clean all internal fluid passages. After the parts have dried thoroughly, lay them on a clean, lint-free surface for inspection.

9. Always replace all O-rings, and seals when overhauling a hydraulic component. Lubricate all parts with clean hydraulic fluid before assembly. Soak all seals in hydraulic fluid before installation. Use a small amount of petroleum jelly to hold O-rings in place during assembly.

10. Be sure to replace any lost hydraulic fluid after completing the installation of a repaired component.

CAUTION

Hydraulic fluid must never come in contact with the brake linings.

11. It is considered good maintenance practices to check the adjustment of any brake which does not seem to be operating properly, and also to check the master cylinder pedal linkage before removing any item from the brake system for repairs. Poor adjustments are more likely to be the trouble than a malfunction of an assembly.

BLEEDING

GENERAL. When air is present in the hydraulic system, the master cylinder pedal will feel "spongy" and the brake will not operate properly. Air will enter the system when a master cylinder or any component is removed, or when a hydraulic line is broken or loose.

Before bleeding the system, check all fittings, hoses, and lines for loose connections. Also, check the level of the hydraulic fluid in the reservoir. The level must be up to the top of the reservoir, during the entire bleeding operation. Fill as necessary with clean hydraulic brake fluid only.

The following procedures are for hydraulic systems with and without a remote controlled bleeder. Whenever necessary, bleed the system as follows:

REMOTE BLEEDER. To bleed systems with a remote bleeder, proceed as follows:

1. Check the brake for proper adjustment.

2. Close the mainline disconnect switch on the crane.

3. Depress the remote bleeder pushbutton, and pump the master cylinder pedal until the soft spongy pedal action disappears.

WITHOUT REMOTE BLEEDER. To bleed systems without a remote bleeder, proceed as follows:

NOTE

Two men are required to bleed systems without a remote bleeder.

1. Check the brake for proper adjustment.

2. Attach a bleeder hose to the bleeder fitting on the wheel cylinder, and submerge the free end of the hose in a clean jar which has been filled one-third full of clean brake fluid. See Figure 9-10.

3. Loosen the bleeder fitting three-quarters of a turn, and pump the master cylinder pedal until the fluid expelled into the jar is free of air bubbles.

4. Tighten the bleeder fitting and remove the bleeder hose.

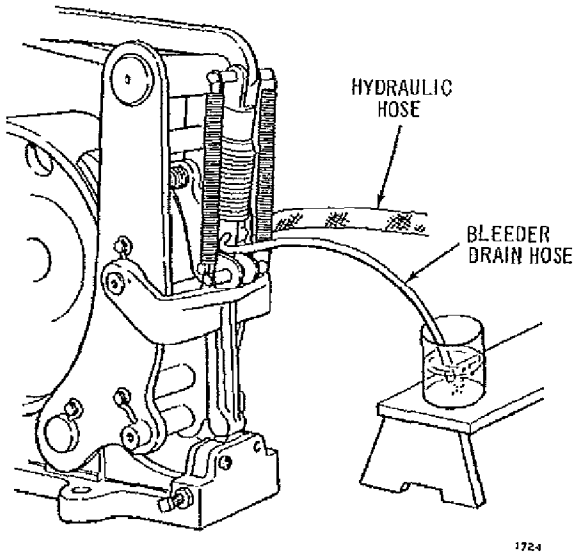

Figure 9-10. Bleeding the Hydraulic System (Typical Method)

MASTER CYLINDER. The procedure for bleeding the master cylinder is the same as for bleeding the hydraulic system, with the following exceptions:

1. The bleeder hose is attached to the bleeder fitting on the master cylinder. See Figure 9-11.

Toth 00682

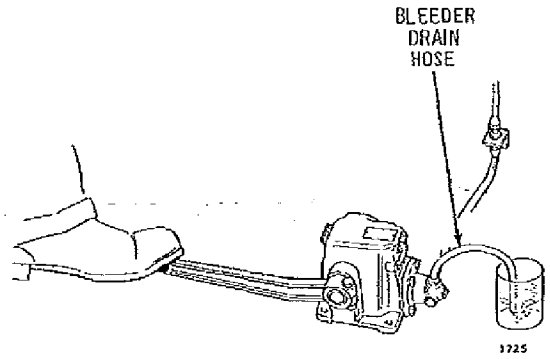

Figure 9-11. Bleeding the Master Cylinder

2. When more than one master cylinder or brake is used, bleed all master cylinders first. Then bleed each wheel cylinder, first from one master cylinder and then from the other master cylinder. Then re-bleed each wheel cylinder from each master cylinder in the same sequence.

DRAINING AND FLUSHING

Whenever foreign material is found in the hydraulic system, the entire system must be drained and flushed, and refilled with the proper fluid, as listed in SECTION IV. Also, see the topic GENERAL MAINTENANCE of the Hydraulic System, SECTION IX. The procedure for draining and flushing systems with or without a remote controlled bleeder are as follows:

To drain the hydraulic system, open the system at its lowest point and place a container under the opening. See Figure 9-12. Also, loosen the bleeder screw on the wheel cylinder three-quarters of a turn; this allows the fluid to drain from the tubing. Then pump the foot pedal until all fluid is pumped out of the master cylinder. After draining, reconnect the line and close the bleeder screw on the wheel cylinder.

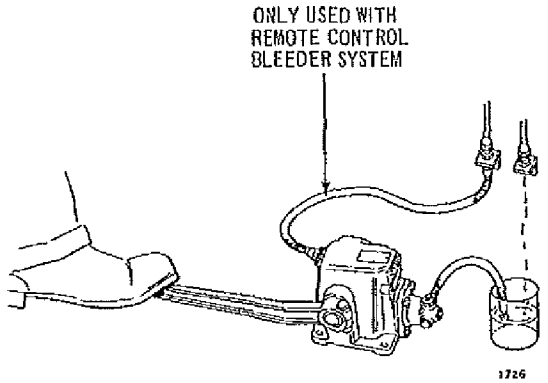

Figure 9-12. Draining the Hydraulic System

The procedure for flushing a system without a remote controlled bleeder is as follows:

1. Fill the master cylinder reservoir with clean alcohol, and proceed as described in the instructions for bleeding the system. Continue to pump the foot pedal until the alcohol being discharged from the system is clean.

NOTE

The master cylinder must be kept full of clean alcohol during the entire flushing operation.

2. Drain the system as described previously, and allow the system to dry. Replace all rubber parts in the system, fill the system with clean hydraulic fluid, and adjust the brake as necessary.

The procedure for flushing a system with a remote controlled bleeder is as follows:

1. Fill the remote control bleeder reservoir with clean alcohol. Continue to depress the remote control bleeder pushbutton, while pumping the foot pedal until clean alcohol is discharged from the system.

2. Drain the system as described previously, and allow the system to dry. Replace all rubber parts in the system, fill the system with clean hydraulic fluid, and adjust the brake as necessary.

REFILLING

After the hydraulic system has been drained and flushed, or whenever a new system is installed, the following procedure should be used to fill the hydraulic system.

To fill a system without a remote control bleeder, proceed as follows:

1. Fill the master cylinder with clean hydraulic fluid, and keep it filled throughout the remainder of the procedure.

2. Bleed the system according to the instructions for bleeding previously given.

To fill a system with a remote control bleeder, proceed as follows:

1. Fill the remote control bleeder reservoir with clean hydraulic fluid. This reservoir must be kept filled throughout the balance of this procedure.

2. Depress the remote control pushbutton and continuously actuate the master cylinder foot pedal until no more air bubbles are expelled into the reservoir.

3. Replace the reservoir cap.

Toth 00683

HYDRAULIC SYSTEM COMPONENTS

GENERAL

The operation of the individual components of the hydraulic system are covered in the following paragraphs. All the components are covered in the order they appear in Figure 9-13, starting with the master cylinder.

NOTE

Cap the hydraulic lines when any component of the system is removed.

MASTER CYLINDERS

GENERAL. Three different master cylinders are used, depending on the size of the brake, and the type of brake. The master cylinders are designated as Types I, II, and III.

DESCRIPTION - TYPE I. The Type I master cylinder is a two stage master cylinder which incorporates the advantages of a large piston for large volume and a small piston for high pressure.

Fluid is initially displaced by the large piston assembly (which contains the high pressure chamber and floating piston) through the bore in the fixed piston rod. As the large piston assembly continues forward, the floating piston contacts the fixed piston rod. Fluid from the low pressure cylinder chamber is now forced over the floating piston into the high pressure chamber. The outlet port, in the floating piston, allows the fluid to flow through the fixed piston rod into the brake system.

As fluid forced up the relief valve tube develops pressure in the relief valve chamber, the relief valve spring is balanced and the relief valve lifts off the lower seat. Instantly the pressure is dropped to atmospheric pressure in the low pressure chamber. The fluid, from this chamber, is now displaced to the reservoir chamber via the open relief port.

At the same instant the relief valve opens, the high pressure cup flares and seals, due to the drop to atmospheric pressure behind it. Mechanical input,

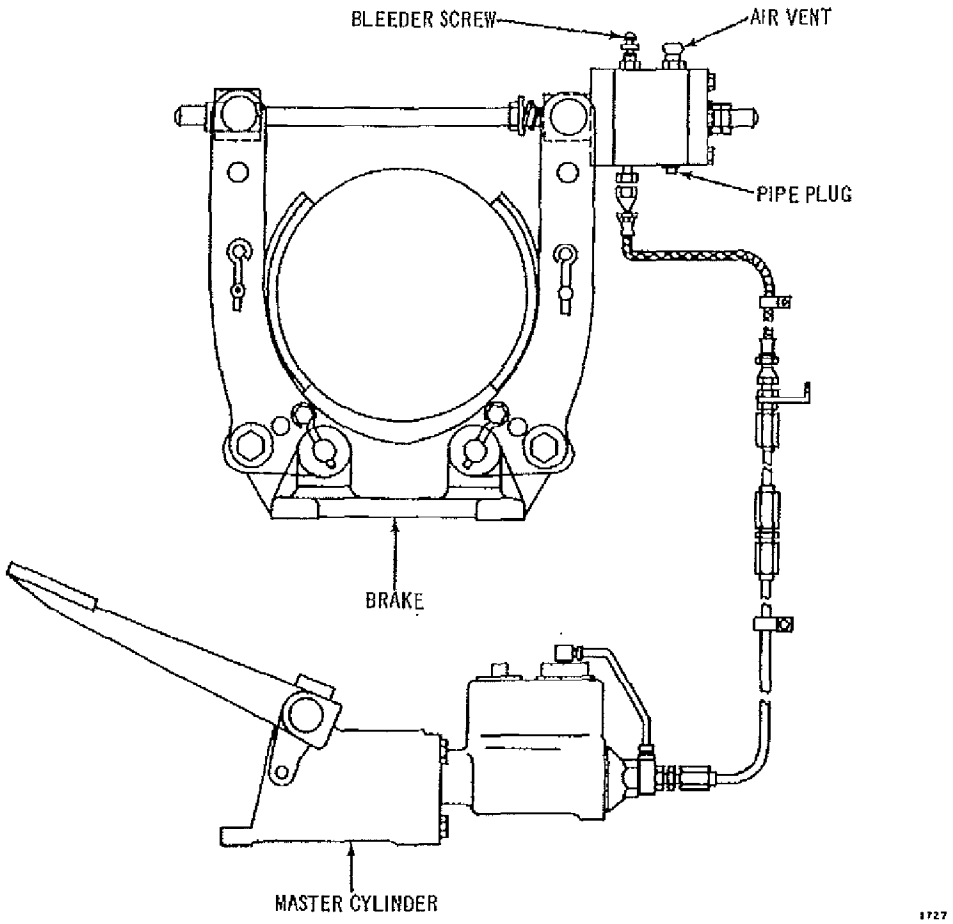

Figure 9-13. Typical Hydraulic Brake System (100E3850)

Toth 00684

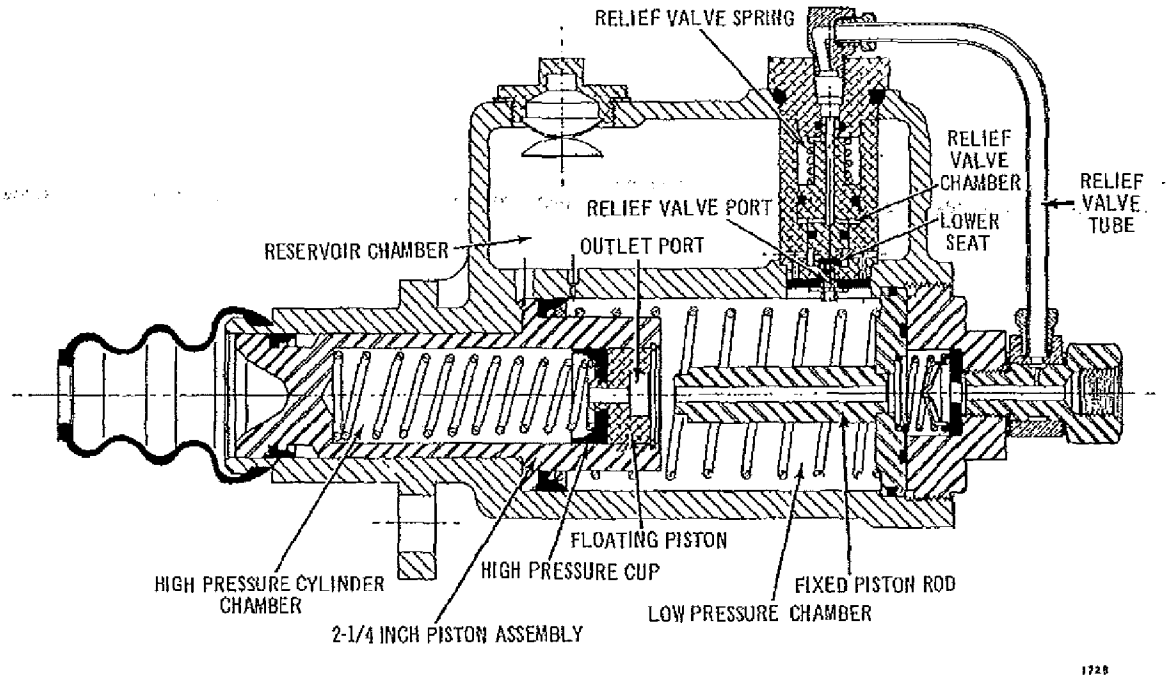

Figure 9-14. Type I Master Cylinder

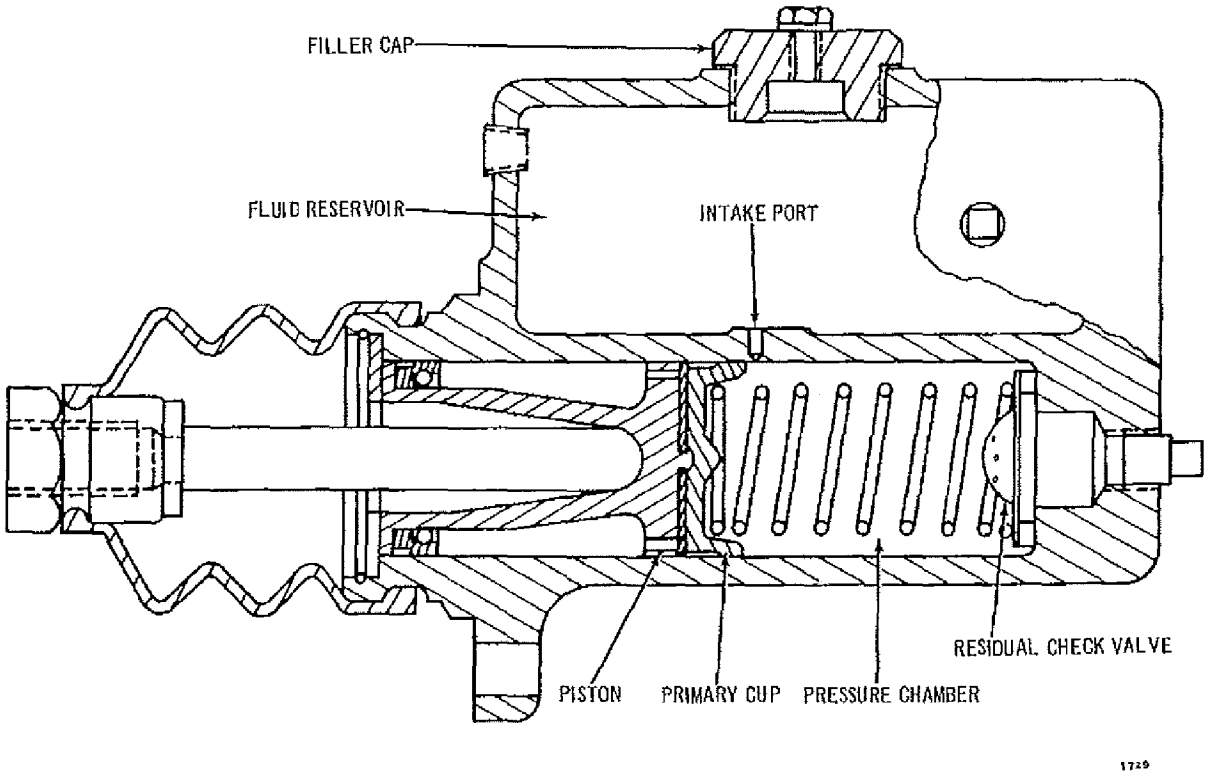

Figure 9-15. Type II Master Cylinder

Toth 00685

at the push rod, is now transferred to fluid energy via the floating piston.

DESCRIPTION - TYPE II. The Type II master cylinder is a single stage type master cylinder, which has one pressure chamber to displace fluid into the hydraulic line and to provide the necessary pressure to apply braking torque.

During application of the brake, initial piston movement seals off the intake port. Then, further piston movement displaces fluid into the hydraulic line. As fluid movement increases, pressure builds up in the system. This pressure actuates the brake cylinder to apply the brake.

A residual check valve is installed at the outlet end of the master cylinder, to maintain hydraulic pressure in the line while brake is in the released position, thus lessening the possibility of air leaking into the system at the wheel cylinder. It also increases the boiling point of the hydraulic fluid.

DESCRIPTION - TYPE III. The Type III master cylinder is a single stage type master cylinder. The operation of this master cylinder is the same as described for the Type II master cylinder, with the following exceptions:

1. The master cylinder has a larger capacity.

2. The piston assembly is housed in the fluid reservoir.

WHEEL CYLINDERS

Different types of wheel cylinders are used on hydraulic and electric-hydraulic brakes, depending on the size and type (shoe or disc) brake.

The operation of all wheel cylinders is basically the same, and the following description will apply to all wheel cylinders.

Fluid entering the wheel cylinder forces the piston outward, brings the brake shoes or discs in contact with the brake wheel or disc plates.

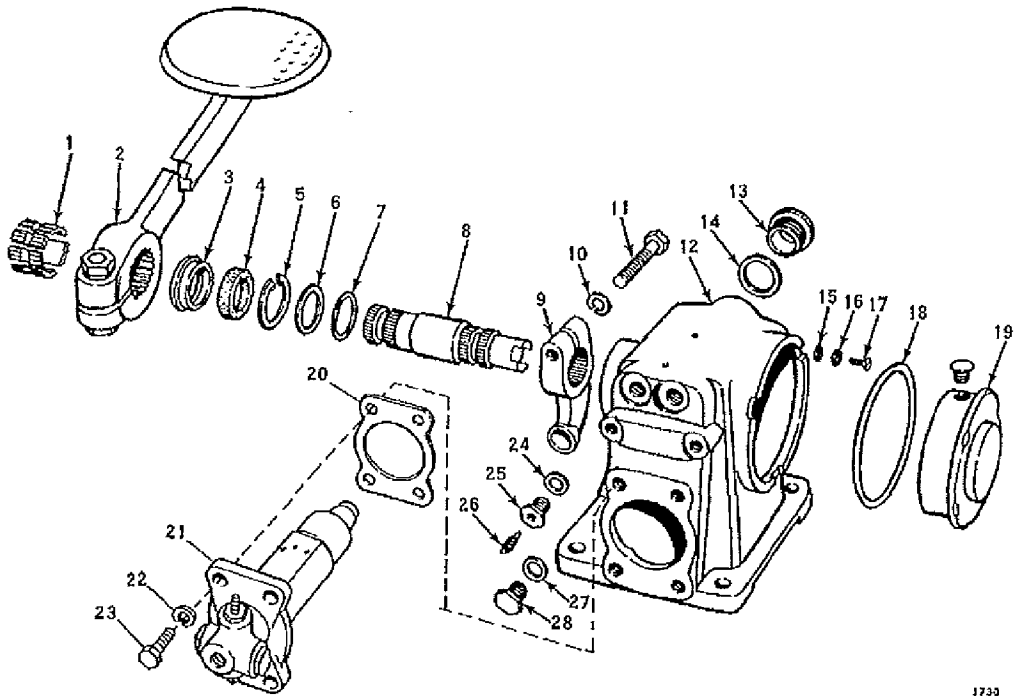

1. Bushing	8. Shaft	15. Washer	22. Lockwasher
2. Brake Pedal	9. Lever	16. Lockwasher	23. Capscrew
3. Felt Retainer	10. Lockwasher	17. Screw	24. Gasket
4. Felt Shaft Seal	11. Capscrew	18. Spring Case Gasket	25. Bleeder Screw Adapter
5. Snap Ring	12. Supply Tank	19. Spring and Case Assembly	26. Bleeder Screw
6. Retainer Plate	13. Filler Plug	20. Piston Assembly Gasket	27. Gasket
7. O-Ring	14. Filler Plug Gasket	21. Piston Assembly	28. Plug

Figure 9-16. Type III Master Cylinder

Toth 00686

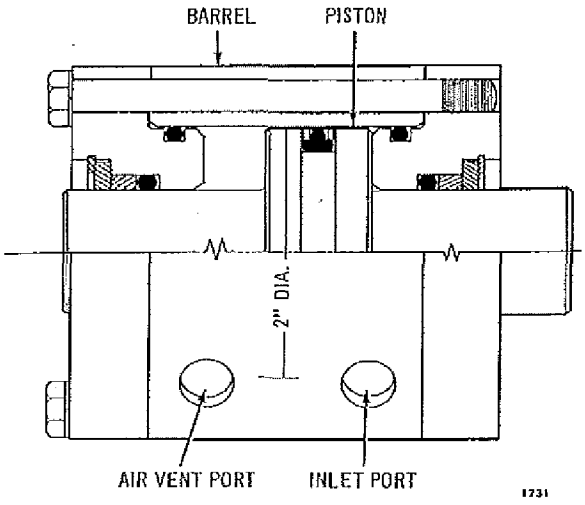

Figure 9-17. Typical Wheel Cylinder

CROSSOVER VALVE

The crossover valve is used only with double station brake systems (two master cylinders and one brake). The crossover valve prevents fluid from one master cylinder from being pumped into the other.

The valve consists of a valve body which resembles a tee fitting and a sliding piston inside the valve body, as shown in Figure 9-18. Hydraulic pressure applied to one end of the valve, causes the piston to move to the opposite end of the valve body, sealing off the opening at that end. Internal passages allow the fluid to flow to the wheel cylinder.

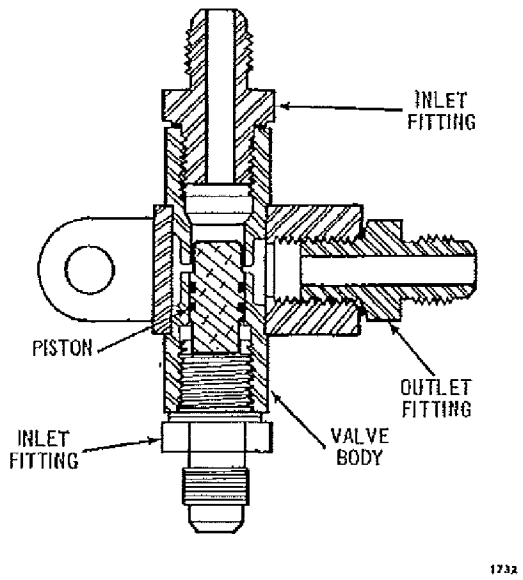

Figure 9-18. Typical Crossover Valve

BRAKE RECTIFIERS

INTRODUCTION

Rectifiers are used to convert AC power to DC because of the inherent disadvantages of AC powered electric brakes.

The shoe brake rectifier assembly has two circuits, one for releasing the brake quickly, and the other for holding the brake in the released position. When power is initially applied to the assembly, the brake relay (BR, Figure 9-19) closes and applies power to the brake transformer which is connected to the rectifier. A current sensitive relay (SR) is connected in series with the brake coil. When the current has reached a preset level, relay (SR) is actuated. This opens normally closed contacts (SR) and closes normally open contacts (SR), thus changing the transformer output voltage applied to the rectifier. This is desirable because, once the brake has been released, less power is required to hold the brake in the released position.

The disc brake rectifier assembly operates in a similar manner except that it does not have the holding circuit.

BRAKE RECTIFIER MAINTENANCE

SHOE BRAKE RECTIFIER. The shoe brake rectifier assembly must be inspected periodically to insure that the current sensitive relay is properly adjusted. If the adjusting screw is about to touch the coil pole piece, the relay must be adjusted. See Figure 9-20. To adjust the relay, proceed as follows:

1. Actuate the relay, loosen the locknut, and turn the adjusting screw until the distance between the adjusting screw and the coil pole piece is from 0.003 to 0.005 inch. If a thickness gage is not available, a piece of writing paper can be substituted for the thickness gage. Tighten the locknut.

2. Tighten the spring adjusting nut until the relay begins to chatter.

3. Then back off the adjusting nut until the relay stops chattering.

In the event that the motor brake fails to release and the rectifier assembly is suspected, the following procedure should be used to check the rectifier assembly:

1. Actuate the brake relay (BR, Figure 9-19) and measure the transformer secondary voltage between taps (X1 and X3) and (X2 and X3). Compare the measured voltages with the voltages shown in Table 9-2. If no voltage is measured, check the line fuses, brake relay, and transformer primary, and replace the defective component.

Toth 00687

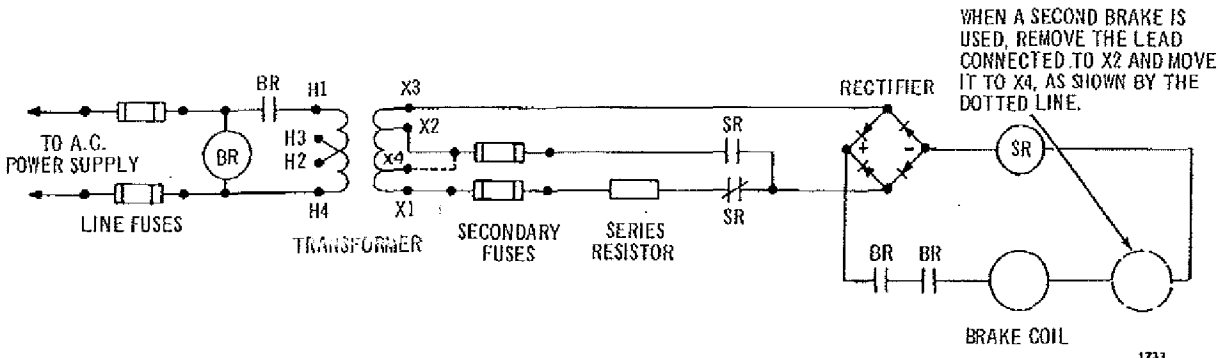

Figure 9-19. Shoe Brake Rectifier Assembly

Table 9-2. Shoe Brake Rectifier Data

BRAKE	A.C. TRANS. VOLTS		D.C. RECT. VOLTS		BRAKE COIL RES.	SERIES RELAY COIL RES.	BRAKE COIL HOLDING AMPS.	BRAKE COIL AND POT ASSEM. LIST #
	FORCING X1-X3	HOLDING X2-X3	FORCING	HOLDING				
8CD100	60	8	52.7	6.00	1.42	.414	3.28	981E38-1
10CD200	60	8	52.7	6.00	1.64	.414	2.92	981E39-1
13CD550	90	12	79.7	9.60	2.34	.414	3.48	981E34-1
16CD1000	90	12	79.7	9.60	2.675	.414	3.10	981E40-1
19CD2000	140	18	125	15.0	1.998	.177	6.90	981E41-1
23CD4000	140	18	125	15.0	2.382	.177	5.86	981E42-3
TWO BRAKES 8CD100	140	18	125	15.0	2.84	.177	4.97	TWO 981E38-1
TWO BRAKES 10CD200	140	18	125	15.0	3.28	.177	4.34	TWO 981E39-1
TWO BRAKES 13CD550	140	30	125	25.8	4.68	.177	5.32	TWO 981E34-1
TWO BRAKES 16CD1000	140	30	125	25.8	5.35	.177	4.67	TWO 981E40-1
TWO BRAKES 19CD2000	140	30	125	25.8	4.0	.177	6.18	TWO 981E41-1
TWO BRAKES 23CD4000	140	30	125	25.8	4.76	.177	5.23	TWO 981E42-3

2. If transformer secondary voltages agree with the values shown in Table 9-2, measure and compare the rectifier output voltage.

If no voltage is measured, check the transformer secondary fuses, series resistor, and rectifier input voltage. If rectifier input voltage is correct, replace the rectifier.

DISC BRAKE RECTIFIER. To check the disc brake rectifier assembly, Figure 9-21, proceed as follows:

Measure rectifier output voltage and current, and compare these measurements with the voltage and current values shown in Table 9-3. If rectifier voltage is low, measure transformer primary and secondary voltages and compare these voltages with the ones shown on the nameplate. If these agree with the nameplate data, replace the rectifier.

Toth 00688

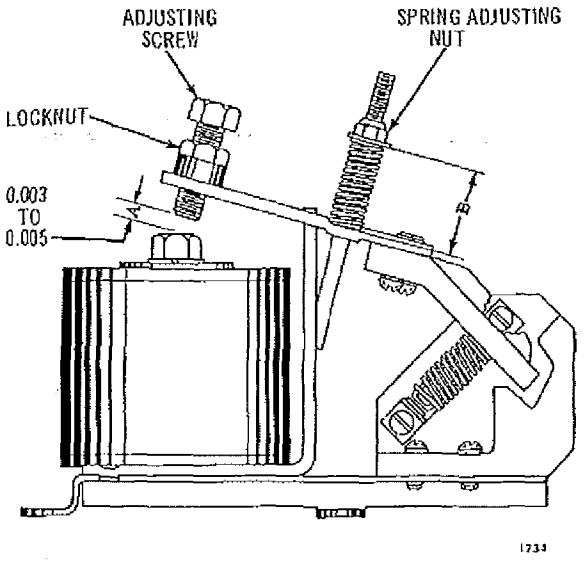

Figure 9-20. SR Relay Adjustment

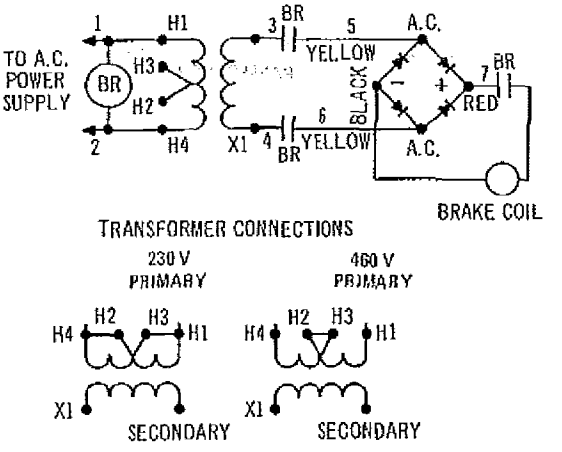

Figure 9-21. Disc Brake Rectifier Assembly

Table 9-3. Disc Brake Rectifier Data

BRAKE SIZE	BRAKE POT ASSEMBLY LIST NO.	BRAKE COIL LIST NO.	BRAKE COIL RES. OHMS	BRAKE COIL AND RECT. VOLTS	ACTUAL BRAKE COIL AMPS.	RECTIFIER RATING AMPS.
*CD-0	981F75-1	975F265-1	18.2	18	.99	.74
*CD-1	981E49-1	975F263-1	11.67	18	1.54	1.5
CD-2	981E43-2	975E341-2	9.14	18	1.97	2.4
CD-2D	981E44-2	975E347-2	9.38	18	1.92	2.4
CD-3	981E46-2	975E340-2	7.26	18	2.4	2.4
CD-3D	981E45-2	975E346-2	7.89	18	2.28	2.4
CD-4	981E48-2	975E339-2	5.35	18	3.36	4.0
CD-4D	981E47-2	975E343-2	5.29	18	3.4	4.0
CD-5	981A6-2	975E348-2	5.37	18	3.35	4.0
CD-5D	981A5-2	975E349-2	4.62	18	3.9	4.0
CD-6	981A7-2	975E351-2	4.87	18	3.7	4.0
CD-6D	981A8-2	975E352-2	4.8	18	3.75	4.0

* Intermittent Hoist Service

Toth 00689

SECTION X
GENERAL MAINTENANCE

GENERAL DISASSEMBLY INSTRUCTIONS

The following points should be kept in mind during disassembly of any component:

1. Disassembly should be limited to that required for specific repairs. Never disassemble an assembly beyond the point necessary to fix the trouble.

2. Never use heat from a torch to assist in removing parts unless the parts to be heated are already damaged beyond repair. Excessive heat will damage the parts beyond repair.

3. Never use more force than necessary while dismantling an assembly. In most cases a great deal of force is not required.

4. Before performing any work on the hoisting unit(s), lower the bottom block or other lifting devices to the floor. If the bottom block can not be lowered to the floor, secure it to some part of the crane structure that will adequately support it.

5. Care should be taken to see that the parts that have been removed are not nicked or damaged.

6. Tag electrical wires when disconnecting them to insure proper reconnection. Also, refer to the wiring diagrams furnished with the crane.

7. Before any adjustments or repairs are started, all controllers must be in the OFF position. Main and emergency switches should be opened, with one of them being locked open. Warning signs should be placed on these switches and later removed only by the person who placed them there.

GENERAL INSPECTION AND REPAIR INSTRUCTIONS

When any major component has been removed and disassembled, all parts should be inspected for wear or damage. Particular attention should be given to the following items:

1. Clean all parts thoroughly, using kerosene, diesel oil, or a suitable commercial cleaning solvent. Never use a hot alkaline solution on finished parts or bearings.

2. Inspect all gears for worn, cracked, or broken teeth.

3. Inspect all bushings for wear, scoring, or galling.

4. Replace all oil seals and O-rings.

5. Replace all gaskets, making sure the replacement gaskets are of the same thickness as the old gaskets. Use gasket material of the same composition.

6. Inspect all anti-friction bearings for excessive play, distorted races, and roller wear or damage. Prepack all anti-friction bearings with a good grade of bearing grease before reassembly.

7. Smooth out ridges on shafts. Be particularly careful to inspect all surfaces on which seal lip seals. These surfaces must be very smooth to prevent wearing away the seal lip, which will cause oil or grease leaks.

8. Inspect all threaded items and replace those with damaged threads.

Toth 00691



WHY HEAT IT, ANYWAY? If you need an interference fit, it's often convenient to shrink the inner race onto the shaft. To do this, you need to establish a difference in temperature. And it's usually easier to heat the bearing than to cool the shaft.

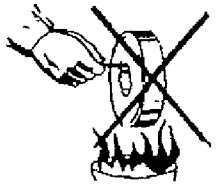

SOME DO'S AND DON'TS. To heat the bearing, immerse it in hot oil. Don't heat the bearing over a flame. And don't heat it above 300°F. Plan to use enough oil—either quenching oil that has a minimum flash point of 300°F. or transformer oil.

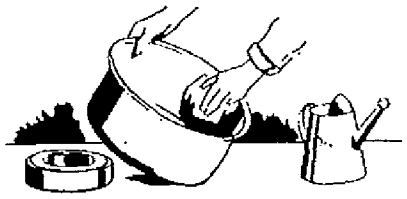

CLEAN THE CONTAINER FIRST. If you reuse oil, make sure it's absolutely clean by filtering it carefully. Again, use plenty of oil—because too little may heat and cool too rapidly, causing the bearing to heat unevenly.



ANOTHER "HOT" TIP. Place a rack at the bottom of the container and set the bearing on it. This will prevent the bearing from touching the hot bottom. It will also separate the bearing from any contamination that may have settled on the bottom.

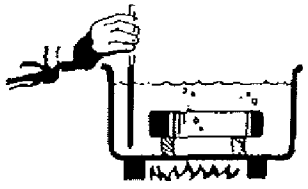

TO HEAT BEARING UNIFORMLY. Place it in the bath as soon as heating starts. Or else allow sufficient time for entire bearing to reach temperature. Stir oil and heat at 300°F. for 15 minutes. Check temperature by immersing a thermometer near bearing.

216

Figure 10-1. Heating Bearings

9. Inspect all other parts for any evidence of damage. Replace or repair any part which is in questionable condition. The cost of the part is often minor in comparison with the cost of redoing the job if the part should fail.

GENERAL REASSEMBLY INSTRUCTIONS

The following points should be kept in mind when reassembling any component of this machine.

1. When torque valves are specified, be sure to use a torque wrench and tighten as directed.

2. Always prepack anti-friction bearings with suitable bearing grease before final assembly.

3. If a bearing is to be heated for assembly purposes, the entire bearing should be immersed in an oil bath, or heated in an oven, for sufficient time to ensure that is heated throughout. See Figure 10-1.

4. Never force a bearing on a shaft if the fit appears to be so tight that the inner race will be distorted. Either polish the shaft seat or heat the bearing, or do both.

5. Inspect all grease passages to be sure they are open and clean.

6. Smooth out all nicks, burrs, or galled spots on shafts, bores, pins or bushings.

7. Check the fit of keys in keyways. File or grind the key, if necessary, to make sure it fits without interference.

8. Roller bearing spacers must be reassembled in the bearing from which they were removed. They are ground to fit individual bearings. See Figure 10-2.

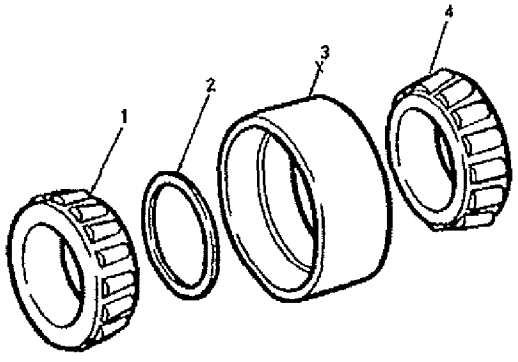

217

1. Inner Race
2. Spacer
3. Outer Race
4. Inner Race

Figure 10-2. Double Roller Bearing

Toth 00692

Table 10-1. Recommended Torque Values

Screw Diameter	SAE Grade 2 P&H Standard No Head Marking	SAE Grade 5 P&H Hi-Tensil 	SAE Grade 8 
1/4-20	5 ft. lbs.	8 ft. lbs.	12 ft. lbs.
5/16-18	11 ft. lbs.	17 ft. lbs.	24 ft. lbs.
3/8-16	18 ft. lbs.	31 ft. lbs.	44 ft. lbs.
7/16-14	28 ft. lbs.	49 ft. lbs.	70 ft. lbs.
1/2-13	39 ft. lbs.	100 ft. lbs.	125 ft. lbs.
5/8-11	88 ft. lbs.	200 ft. lbs.	250 ft. lbs.
3/4-10	105 ft. lbs.	350 ft. lbs.	440 ft. lbs.
7/8-9	160 ft. lbs.	570 ft. lbs.	720 ft. lbs.
1-8	235 ft. lbs.	850 ft. lbs.	1070 ft. lbs.
1-1/8-7	300 ft. lbs.	1050 ft. lbs.	1500 ft. lbs.
1-1/4-7	420 ft. lbs.	1480 ft. lbs.	2120 ft. lbs.
1-3/8-6	560 ft. lbs.	1950 ft. lbs.	2780 ft. lbs.
1-1/2-6	740 ft. lbs.	2580 ft. lbs.	3710 ft. lbs.

Values listed are suggested maximums on parts carrying residual oil of manufacture. These values do not apply to plated or otherwise lubricated parts.

Toth 00693

PREVENTIVE MAINTENANCE

CRANE SERIAL NO._____ CUSTOMERS MACH. NO._____ LOCATION_____

CAPACITY_____ SPAN_____ VOLTAGE_____

VOLTAGE VALUE WHILE OPERATING_____ INSPECTED BY_____ DATE_____

GENERAL

Preventive maintenance programs reduce overall maintenance costs and prevent serious shutdowns by forewarning, or pointing out serious problems. Minor adjustment, cleaning and parts replacement not only maintain the high efficiency of overhead crane operation, but also eliminate nuisance complaints from operators and minor shutdowns.

To determine a preventive maintenance program to meet the requirements of a particular crane is virtually impossible due to numerous variable factors such as material handled, application, local atmospheric conditions, mode of operation, load, etc. However, experience has given us the knowledge to establish an average program.

This program is based on a 40 hour work week (8 hours per day, 5 days a week). The customer can apply this program in proportion to the hours the crane is worked each week.

This program is one of (1) periodic inspections (2) determining the corrective measures required by checking the report filled out at the time of inspection. As a matter of being economical and expedient, the maintenance personnel inspecting the crane can take care of minor adjustments, cleaning and repairs where required.

Periodic review of old inspection reports will point out the service life of crane components. This will foretell the need for adjustment, repair or replacement of components. The ordering and replacement of parts can be planned in advance thus minimizing time and expense involved.

DAILY OPERATIONAL CHECK BY OPERATOR

1. Check the operation of all safety and warning devices such as limit switches, sirens, lights, horns, pushbuttons and other safety devices.
2. Check the operation of all brakes. When lifting maximum load, be sure the brakes will hold load. Make this check by lifting the load only a few inches from floor.
3. Check operation of variable speed pushbuttons, when used, to make certain full speed control is obtained.

WEEKLY INSPECTION

1. Inspect all brakes and adjust where required.
2. Check the level of the hydraulic fluid in the master cylinder.
3. Inspect all hoisting cables for wear, kinks and broken wires.
4. Inspect all gearing and hoist cables for proper lubrication, (be sure to include bottom blocks, bucket, open gearing, lumber grapple and other attachments). Lubricate all lube points requiring weekly lubrication as outlined in Section IV, Lubrication.
5. Apply several drops of oil to all pivot points on pins and levers not equipped with grease fittings.
6. Check for secure locking on brake pins.

MONTHLY INSPECTION

1. Perform the steps outlined under "WEEKLY INSPECTION".
2. Inspect the general condition of all contactor points, auxiliary contact points on all contactors, relays, switches, limit switches and controllers.

CAUTION

Contact tips on drum controllers, limit switches and P&H contactors must be cleaned with 000 sandpaper. Do not file contact tips.

The following steps 3 and 4 pertain only to cranes with adjustable controls.

3. Take current reading at all motor primary circuits to determine inrush values during motor acceleration. Record these figures.

NOTE

The maximum inrush values for hoisting motors is 200% of motor nameplate data and the maximum inrush values for bridge and trolley motors is 200% of motor nameplate data. Record the voltage readings at the crane while lifting a maximum load, at this time the crane should be at the furthest point from the taps of main line conductors. Voltage readings should be within + or -10% of the rated line voltage.

4. Adjust the controls as required.
5. Check all gear cases for proper level of lubrication.
6. Check crane runway rails for the following:
   a. True alignment (tolerance ± 1/8 inch)
   b. Span (tolerance ± 1/8 inch)
   c. Rail splices (gap should be zero with splice plates tight)
7. Check the alignment of conductors and shoes.
8. Check the motor brushes for free movement. Also check the brushes to determine if there is enough stock for wear.

QUARTERLY INSPECTION

1. Perform the steps outlined under "MONTHLY INSPECTION".
2. Conduct a complete crane inspection using this inspection sheet.
3. Lubricate the crane (be sure to include attachments).

SEMI ANNUAL INSPECTION

1. Perform the steps outlined under "QUARTERLY INSPECTION".
2. Check the crane to determine if high resistance ground faults exist. This can be done with a megger.
3. Lubricate all motors.
4. Check the wheels, compare the diameters of drivers, check the flanges for evidence of flange wear due to rail misalignment.
5. Drain and flush all gear cases. Refill with clean, fresh lubricant of the proper type.

ANNUAL INSPECTION

1. Perform the steps outlined under "SEMI ANNUAL INSPECTION".
2. Check the fitted bolts by removing and inspecting for evidence of any shearing action.
3. Check the drive shaft alignment at the couplings when motors or gear cases are removed for repair.

Toth 00694

MOTORS - BRAKES - CONTROLS

	CHECK COLUMN WHICH SHOWS CONDITION OF UNIT OR WHAT IS NEEDED TO PLACE UNIT IN OPERATING CONDITION. NOTE: ADDITIONAL NOTATIONS ARE TO BE LISTED ON LAST PAGE USING LINE NUMBER AND COLUMN LETTER FOR IDENTIFICATION.	A: O. K.	A: REQUIRES LUBRICATION	A: REQUIRES REPLACEMENT	A: REQUIRES ADJUSTMENT	A: REQUIRES CLEANING	A: LOOSE	A: BROKEN, BENT, BADLY WORN	A: SEE ADDITIONAL NOTES		CHECK COLUMN WHICH SHOWS CONDITION OF UNIT OR WHAT IS NEEDED TO PLACE UNIT IN OPERATING CONDITION. NOTE: ADDITIONAL NOTATIONS ARE TO BE LISTED ON LAST PAGE USING LINE NUMBER AND COLUMN LETTER FOR IDENTIFICATION.	B: O. K.	B: REQUIRES LUBRICATION	B: REQUIRES REPLACEMENT	B: REQUIRES ADJUSTMENT	B: REQUIRES CLEANING	B: LOOSE	B: BROKEN, BENT, BADLY WORN	B: SEE ADDITIONAL NOTES
1	Bridge Motor Armature or Rotor										Bridge Resistors								
2	Bridge Motor Commutator or Slip Ring										Main Hoist Resistors								
3	Bridge Motor Field or Stator										Aux. Hoist Resistors								
4	Bridge Motor Brushes										Trolley Resistors								
5	Bridge Motor Brush Holders																		
6	Bridge Motor Bearings & Oil Seals										CAM OPERATED MASTER CONTROLLERS								
7											Bridge Controller Stationary Contacts								
8	Main Hoist Motor Armature or Rotor										Bridge Controller Movable Contacts								
9	Main Hoist Commutator or Slip Ring										Main Hoist Controller Stationary Contacts								
10	Main Hoist Motor Field or Stator										Main Hoist Controller Movable Contacts								
11	Main Hoist Motor Brushes										Aux. Hoist Controller Stationary Contacts								
12	Main Hoist Motor Brush Holders										Aux. Hoist Controller Movable Contacts								
13	Main Hoist Motor Bearings & Oil Seals										Trolley Controller Stationary Contacts								
14											Trolley Controller Movable Contacts								
15	Aux. Hoist Motor Armature or Rotor																		
16	Aux. Hoist Motor Commutator or Slip Ring										CONTROL CABINET								
17	Aux. Hoist Motor Field or Stator										Line Contactor & Knife Switch								
18	Aux. Hoist Motor Brushes										Bridge Contactors								
19	Aux. Hoist Motor Brush Holders										Bridge Contactor Aux. Contacts								
20	Aux. Hoist Motor Bearings & Oil Seals										Main Hoist Contactors								
21											Main Hoist Contactor Aux. Contacts								
22	Trolley Motor Armature or Rotor										Aux. Hoist Contactors								
23	Trolley Motor Commutator Slip Ring										Aux. Hoist Contactor Aux. Contacts								
24	Trolley Motor Field or Stator										Trolley Contactors								
25	Trolley Motor Brushes										Trolley Contactors Aux. Contacts								
26	Trolley Motor Brush Holders										CV Relays								
27	Trolley Motor Bearings & Oil Seals										Overload Relays								
28											Fuses								
29	BRAKES										Rectifiers - Control								
30	Bridge Brake Linings																		
31	Bridge Brake Wheel or Discs										Main Line Conductors								
32	Bridge Brake Coil										Main Line Collectors								
33	Main Hoist Brake Linings										Trolley Conductors								
34	Main Hoist Brake Wheel or Discs										Trolley Collectors								
35	Main Hoist Brake Coil																		
36	Aux. Hoist Brake Linings										DRUM CONTROLLERS								
37	Aux. Hoist Brake Wheel or Discs										Bridge Controller Finger Tips								
38	Aux. Hoist Brake Coil										Bridge Controller Segments								
39	Trolley Brake Linings										Bridge Controller Blowout Coils								
40	Trolley Brake Wheel or Discs										Main Hoist Controller Finger Tips								
41	Trolley Brake Coil										Main Hoist Controller Segments								
42	Hydraulic Brake Cylinder										Main Hoist Controller Blowout Coils								
43	Hydraulic Brake Lines										Aux. Hoist Controller Finger Tips								
44	Hydraulic Master Cylinder										Aux. Hoist Controller Segments								
45											Aux. Hoist Controller Blowout Coils								
46	Brake Rectifier & Relay										Trolley Controller Finger Tips								
47	Main Hoist Limit Switch										Trolley Controller Segments								
48	Aux. Hoist Limit Switch										Trolley Controller Blowout Coils								

Toth 00695

MECHANICAL EQUIPMENT

CHECK COLUMN WHICH SHOWS CONDITION OF UNIT OR WHAT IS NEEDED TO PLACE UNIT IN OPERATING CONDITION. NOTE: ADDITIONAL NOTATIONS ARE TO BE LISTED ON LAST PAGE USING LINE NUMBER AND COLUMN LETTER FOR IDENTIFICATION.	C									CHECK COLUMN WHICH SHOWS CONDITION OF UNIT OR WHAT IS NEEDED TO PLACE UNIT IN OPERATING CONDITION. NOTE: ADDITIONAL NOTATIONS ARE TO BE LISTED ON LAST PAGE USING LINE NUMBER AND COLUMN LETTER FOR IDENTIFICATION.	D								
	O.K.	REQUIRES LUBRICATION	REQUIRES REPLACEMENT	REQUIRES ADJUSTMENT	REQUIRES CLEANING	LOOSE	BROKEN, BENT, BADLY WORN	SEE ADDITIONAL NOTES			O.K.	REQUIRES LUBRICATION	REQUIRES REPLACEMENT	REQUIRES ADJUSTMENT	REQUIRES CLEANING	LOOSE	BROKEN, BENT, BADLY WORN	SEE ADDITIONAL NOTES
BRIDGE										Main Hoist (CONT.)									
Truck Wheels										Load Brake Pawls									
Axle Bearings										Load Brake Pawl Springs & Plugs									
Truck Pinions																			
Truck Gears										AUXILIARY HOIST									
Truck Pinion Shaft Bearings & Oil Seals										Bottom Block									
Cross Shaft										Upper Block									
Cross Shaft Bearings										Wire Rope									
Motor Pinion										Rope Drum									
Motor Gear										Drum Shaft									
Motor Gear Case Bearings & Oil Seals										Drum Gear									
Couplings										Drum Pinion									
Crane Alignment										Intermediate Gear									
Bolts & Rivets										Intermediate Pinion									
End Trucks										Motor Gear									
Gear & Coupling Guards										Motor Pinion									
Bridge Bumpers										Gear Case Bearings & Oil Seals									
Platforms										Couplings									
Railings										Load Brake Friction Discs									
Cage										Load Brake Ratchet									
Cage Windows										Load Brake Pawls									
Ladders & Stairways										Load Brake Pawls Spring & Plugs									
TROLLEY										MAGNET CABLE REEL									
Truck Wheels										Bearings & Oil Seals									
Axle Bearings										Drive Chain									
Truck Gear										Sprockets									
Gear Case Bearings & Oil Seals										Brushes & Brush Holders									
Couplings										Collector Rings									
Motor Pinion										Conductor Cable									
Motor Gear																			
										LUMBER GRAPPLE									
MAIN HOIST										Motor Couplings - Turntable & Arms									
Bottom Block										Speed Reducers - Turntable & Arms									
Upper Block										Gears & Pinions - Turntable & Arms									
Wire Rope										Collector Rings									
Rope Drum										Brushes & Brush Holders									
Drum Shaft										Sleeves & Pins									
Drum Gear										Bearings Grapple Arm									
Drum Pinion																			
Intermediate Gear										GRAB BUCKET									
Intermediate Pinion										Sheaves & Rollers									
Motor Gear										Hinge Pins & Bushings									
Motor Pinion										Bearings									
Gear Case Bearings & Oil Seals																			
Couplings										FILTER SYSTEM									
Load Brake Friction Discs																			
Load Brake Ratchet										AIR CONDITIONING									

Toth 00696

SAFETY PRECAUTIONS TO BE OBSERVED BEFORE INSPECTING ANY CRANE

1. Before working on or from a crane get permission from your foreman.

2. Never go on a crane without first informing the operator. Be sure the operator understands what you are to do and what he is to do.

3. When repairs to a crane are necessary, move the crane to a location where it will not interfere with the operations on the floor or operation of other cranes.

4. Before starting repairs, check the following:

   a. Main switch is locked open.

   b. That a sign is on the main switch warns against closing it.

   c. That all controllers are in the OFF position.

5. Where more than one crane uses the same runway, place stops at a safe distance to protect the crane under repairs from collision.

6. When working near the main line runway conductors, disconnect the power or cover the conductors in accordance with the recommendations from the plant electrical department.

7. When repairing a crane place a sign "DANGER: MEN WORKING OVERHEAD" on the floor beneath the crane.

8. When repairing runways place stops or warning signs at ends of the section under repairs.

9. When boarding a crane always use the platforms, steps or ladders provided.

10. Raise or lower all tools or material with the use of a hand line or block and tackle. Do not fasten the hand line to yourself.

11. Take care that loose parts and tools do not fall to the floor.

12. Beware of loose or torn clothing which may be caught in the moving parts of the crane.

13. Replace all guards and other safety devices which were removed to facilitate repairs. Remove all tools, loose parts and other material from the crane. Remove any rail stops that were placed on the rails during the repair period.

14. Inform the operator of the crane that the repairs are completed.

Line Number	Column Letter	NOTES

Toth 00697

MOTOR HP	A-C.	D-C.	TYPE	FRAME	R.P.M.	PHASE	CYCLES	VOLTS	DIVISION	SECTION

WINDING	TOOL NO.	MANUFACTURER'S NO.	SERIAL NO.	LOCATION-SECTION	COL. NO.

DATE INSTALLED	DATE IN STORAGE	DRIVES MACHINE	TOOL NUMBER

DATE INSTALLED	DATE IN STORAGE	DRIVES MACHINE	TOOL NUMBER

DATE INSTALLED	DATE IN STORAGE	DRIVES MACHINE	TOOL NUMBER

DATE	BLOWNOUT	BEARINGS	END PLAY	BRUSHES & HOLDER	COMMU.	MEGGER	GENERAL CONDITION	INSPECTED BY

MOTOR MAINTENANCE RECORD

DATE TAKEN OUT OF SERVICE_____

DATE SCRAPPED_____

Toth 00698

PLANT NO. _____ MACHINE NO. _____ INVENTORY NO. _____ MOTOR NO. _____

HP _____ MANUFACTURED BY _____

SERIES SHUNT COMPOUND SYNCHRONOUS INDUCTION

TYPE FRAME SPEED VOLTS AMPERES

PHASE CYCLES TEMP. RISE EXCITATION AMPS. ROTOR OR ARMATURE OR SERVICE NO.

MODEL NO. FORM NO. MANUFACTURER'S NO. SERIAL NO.

MFGRS. ORDER NO. OUR ORDER NO. DATE

CONNECTION DIAGRAM - ROTOR OR ARMATURE STATOR

SPECIFICATION	BEARINGS	SHAFT EXTENSION	PULLEY	GEAR	V BELT DRIVE
OPEN ☐	SLEEVE ☐	DIA. _____	DIA. _____	TEETH _____	NO. GROOVES _____
EXP. PROOF ☐	BALL ☐	LENGTH _____		PITCH _____	PITCH DIA. _____
DRIP PROOF ☐	ROLLER ☐	KEYWAY _____	FACE _____	FACE _____	BELT SECTION
TOTALLY ENCL. ☐					☐ A—1/2 X 11/32
VERTICAL ☐					☐ B—21/32 X 7/16
_____ ☐					☐ C—7/8 X 17/32
					☐ D—1 - 1/4 X 3/4

MOTOR SERVICE RECORD

DATE INSTALLED	LOCATION	APPLICATION

DATE REPAIRED	REPAIRS OR PARTS REPLACED	CAUSE	REPAIRED BY	TOTAL COST

MOTOR SERVICE RECORD

Toth 00699

NAME OF PART	NO. PER MOTOR	MANUFACTURER'S NO.	PARTS PURCHASED								
			DATE	QUAN.	TOTAL COST	DATE	QUAN.	TOTAL COST	DATE	QUAN.	TOTAL COST
ROTOR OR ARMATURE COILS											
STATOR COILS											
FIELD COILS — SHUNT											
FIELD COILS — SERIES											
FIELD COILS — COMMUTATING											
ASSEMBLED SEG. OR COLL. RINGS											
BRUSHES											
BRUSHHOLDERS											
BRUSHHOLDER SPRINGS											
BRUSHHOLDER FINGERS											
BEARING — FRONT											
BEARING — REAR											
OIL RING — FRONT											
OIL RING — REAR											

MOTOR SERVICE RECORD

Toth 00700

ORDER BLANK

TO: Manager of Technical Publications
Harnischfeger Corporation
4400 West National Avenue
Milwaukee, Wisconsin
53246

Date _____

P.O. No. _____

SUBJECT: Owner & Operators Manual
Model _____
Bulletin No. _____

QUANTITY REQUIRED	UNIT COST
-- to 25	$7.50
26 to 49	$6.50
50 to --	$5.00

Attached is a check or purchase order in the amount of $ _____ covering _____ copies of the above Owner & Operators Manual.

If more than one type of manual is required, list type and number required below, or on the reverse side of this form.

Please forward manuals to the following address:

MODEL No.	No. REQUIRED

Name _____
Street _____
City & State _____

Please use this form when ordering additional manuals. Additional forms are available upon request. All orders must be accompanied by a purchase order or check for the full amount of the order.

ORDER BLANK

TO: Manager of Technical Publications
Harnischfeger Corporation
4400 West National Avenue
Milwaukee, Wisconsin
53246

Date _____

P.O. No. _____

SUBJECT: Owner & Operators Manual
Model _____
Bulletin No. _____

QUANTITY REQUIRED	UNIT COST
-- to 25	$7.50
26 to 49	$6.50
50 to --	$5.00

Attached is a check or purchase order in the amount of $ _____ covering _____ copies of the above Owner & Operators Manual.

If more than one type of manual is required, list type and number required below, or on the reverse side of this form.

Please forward manuals to the following address:

MODEL No.	No. REQUIRED

Name _____
Street _____
City & State _____

Please use this form when ordering additional manuals. Additional forms are available upon request. All orders must be accompanied by a purchase order or check for the full amount of the order.

Revision 1

P&H

QUALITY & SERVICE SINCE 1884

WAREHOUSES AND SERVICE STATIONS

MILWAUKEE 46, WIS. . . . . 4400 W. NATIONAL AVE.

ATLANTA, GA. . . . . 359-361 E. PACES FERRY ROAD

NORWALK, CALIF. . . . . 14420 S. BLOOMFIELD AVE.

PHOENIX, ARIZ. . . . . 130 S. 29TH STREET

SEATTLE, WASH. . . . . 135 S. BRANDON STREET

TETERBORO, N.J. . . . . 100 NORTH STREET

BRANCH OFFICES

ATLANTA, GA.
BOSTON, MASS.
BUFFALO, N.Y.
BIRMINGHAM, ALA.
CHICAGO, ILL.
CINCINNATI, OHIO
CLEVELAND, OHIO
DALLAS, TEXAS
DENVER, COLO.
DETROIT, MICH.
NORWALK, CALIF.
MIAMI, FLA.
MILWAUKEE, WIS.
NEW YORK, N.Y.
PHILADELPHIA, PA.
PHOENIX, ARIZ.
PITTSBURGH, PA.
SAN FRANCISCO, CALIF.
SEATTLE, WASH.
ST. LOUIS, MO.
TETERBORO, N.J.
WASHINGTON, D.C.

AGENTS AND SERVICE STATIONS IN ALL PRINCIPAL COUNTRIES OF THE WORLD

LITHO IN U.S.A.