MUELLER CO.

Decatur, Ill.

BRANCHES

145-149 W. 30th St., New York 1072-76 Howard St., San Francisco 2468 Hunter St., Los Angeles

PRODUCTS

Mueller Automatic System of Hot Water Heat Control

Reducing and Regulating Valves for water.
Reducing and Regulating Valves for steam.
Relief Valves. Water Strainers.

Complete line of High Grade Plumbing Brass Goods

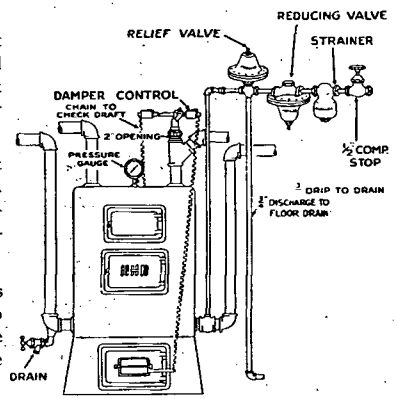

Mueller Automatic System of Hot Water Heat Control—This is a closed system operating automatically without an expansion tank. It can be quickly installed on either new or old jobs.

The water in the system is always kept fresh. This promotes good circulation. Just enough water is admitted by the reducing valve to supply the amount released by the relief valve.

When air is released from a radiator it is not necessary to go to the basement to turn water into the system as is the case with other systems. The reducing valve takes care of this.

A very considerable saving in fuel is effected due to the automatic control of dampers and rapid circulation.

Perfectly safe as both reducing valve and relief valve are operated by the pressure of the water in the system. These valves are especially constructed and tested for use on this system.

The reducing and relief valves are positive in action and durable, the working parts being made of bronze with phosphor bronze diaphragms.

Boiling point of water raised to higher point than with open system.

The damper regulator is a very important part of this system as it is not only a fuel saver but also is a safety feature, checking the fire when the desired temperature is reached.

Reducing and Regulating Valves—For steam, water, air, gas, oil, etc., and relief valves that are absolutely dependable. They will not stick after long periods of disuse.

Brass Goods—Everything in the line of brass faucets, stops, etc., for lavatory and bath room, and also complete line of laboratory faucets adopted and approved by leading universities such as the Massachusetts Tech.

Mueller Co. has been in business from 1857 and has an acknowledged reputation for quality goods.

Specific information regarding any Mueller product will be cheerfully given upon request.

Reading Heater & Supply Co.

Incorporated

GENERAL OFFICES

Woodward and Church Streets

Reading, Pa.

Manufacturers and Distributors of

The Reading Tank-in-the-Basement Systems for Hot Water Heating and The Reading All-Metal Temperature Regulator for Hot Water Heaters, Domestic Heaters and Storage Tanks, Wholesale Dealers in Boilers, Radiators and Heating Specialties.

The Reading Tank-in-the-Basement System, for Hot Water Heating, is a long step in advance of the old method of placing the Expansion Tank above the highest radiator, in that it removes the tank to the basement, obviating many objectionable features and removing the liability of fracture by freezing of the expansion line or overflow.

The Reading Tank is proportioned according to the amount of radiating surface on the job, and provides ample air space to allow for expansion. The gauge glass enables the operator to detect any air leakage and to maintain a sufficient air space.

The Reading Relief Valve permits a slight pressure on the system, even when the water is cold. This means increased efficiency and prevents the accumulation of air in the upper radiators. The increased pressure will not cause leaks as the air cushion prevents undue strains. We furnish complete instructions for installation.

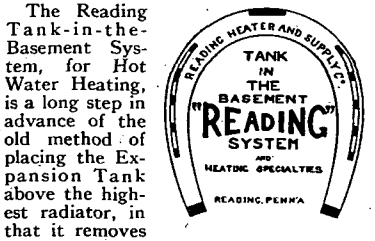

Capacities and Prices

(Subject to trade discount)

No. 1.	300 to	500 ft. of Radiation	$38
No. 2.	500 to	800 ft. of Radiation	40
No. 3.	800 to	1,000 ft. of Radiation	41
No. 4.	1,000 to	1,300 ft. of Radiation	45
No. 5.	1,300 to	1,800 ft. of Radiation	50
No. 6.	1,800 to	2,600 ft. of Radiation	56

In ordering Reading Tank-in-the-Basement Systems the following information is required: Amount of radiation on job, *square feet; number of stories to be heated.*

The Reading All-Metal Regulator can be used to control water temperature in any system, regardless of pressure carried. The Regulator is easily applied and the action is sensitive and reliable.

We will be glad to send a catalog describing our complete line of Specialties, upon request. Our Engineering Department will welcome the opportunity to assist the trade in difficult problems pertaining to our line, and we invite such inquiries.

We carry a large stock of boilers of all capacities, Round or Sectional, and can make prompt shipments.

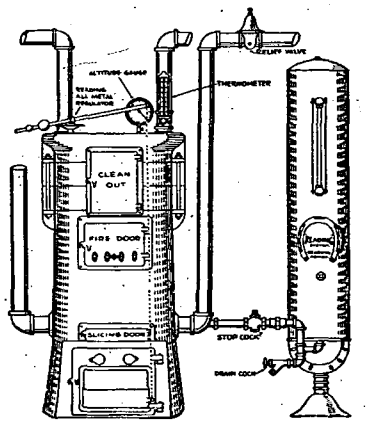

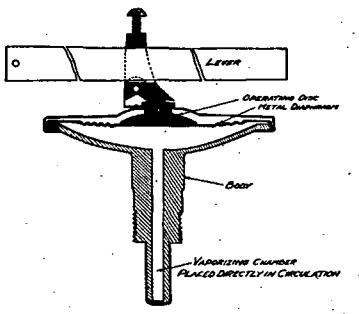

INTERIOR VIEW
READING ALL METAL TEMPERATURE REGULATOR