APPLICATION
BASIC INSULATION

PIPE AND FITTINGS

CALCIUM SILICATE
SINGLE LAYER:

FIG. 43 B - GATE VALVE

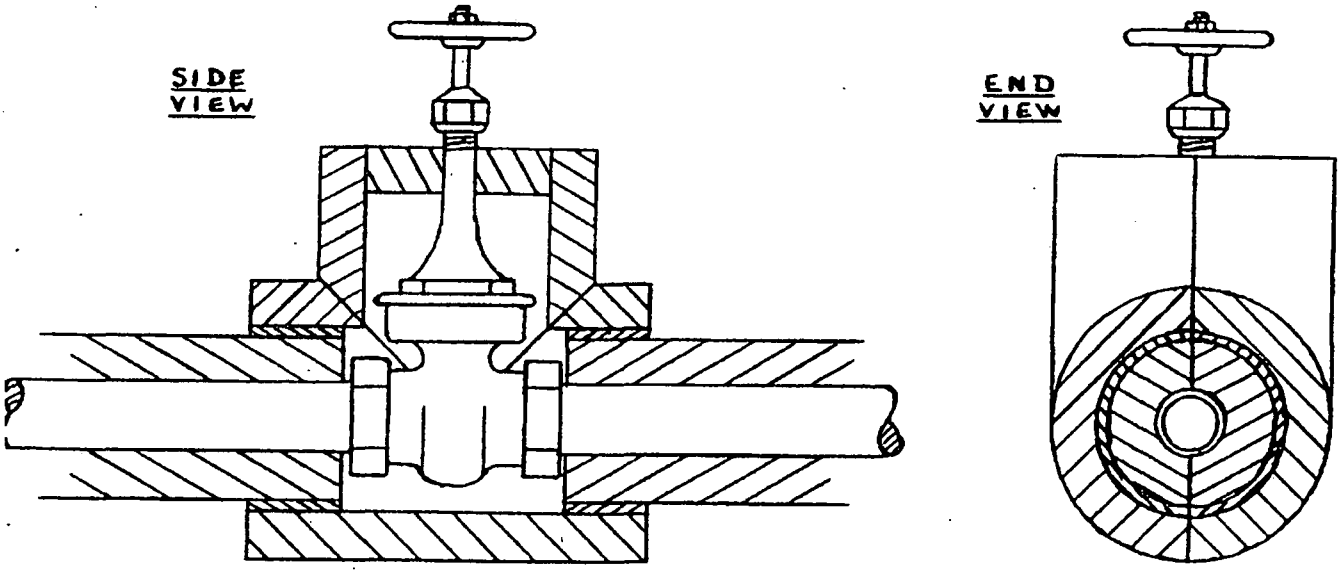


b. Socket weld valve cover - Figures 44 A & B. (T.O. and fab. per form #10 Section VII-A page 10)

FIG. 44 A

FIG. 44 B

