HEACON DAMPERS

for unique applications

the two in one damper

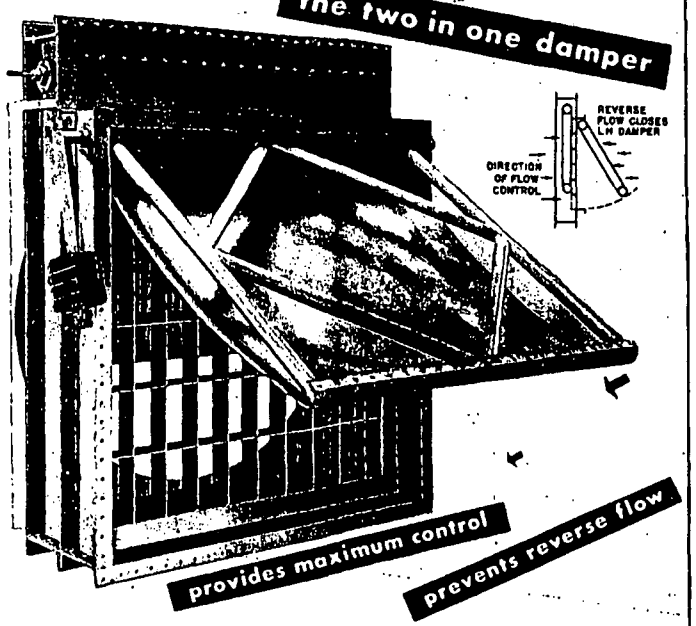

provides maximum control

prevents reverse flow

Variations in design of Heacon Dampers are made when specific applications make them necessary. One of the most unique dampers developed for special application is the double duty Heacon Damper here illustrated.

This unit was designed to operate in tandem with two others, for the control of 3,000 h.p. blowers. It is actually a combination of two types: the SVH, seen partially closed through the grill, for regulating flow, and the LH, or leaf type, shown in open position on near side. This LH damper acts as a check valve to prevent reverse flow. Both damper curtains use a common grill and provide maximum control for the blowers.

Heacon Dampers are the answer to many flow control problems. Your problem may be a unique one that can be easily solved by our designs. Why not contact our representatives and let them help you with the solution to your control problem.

FIELD PROJECT ENGINEERS

ATLANTA, GEORGIA
C. H. Johnson & Associate
Bona Allen Building

BOSTON 10, MASS.
Thermix Engineering Co.
55 Broad Street—Room 610

BUFFALO, NEW YORK
Johnston Engineering Co.
1200 Niagara Street

CHARLOTTE 2, N. C.
T. C. Heyward
1403 Independence Bldg.

CHATTANOOGA 2, TENN.
Edgar A. Rogers
Chattanooga Bank Bldg.

CHICAGO 6, ILLINOIS
Cochrane Engineering Corp.
309 West Jackson Boulevard

CINCINNATI 2, OHIO
Ellman Equipment Co.
1101 Fed. Reserve Bank Bldg.

CLEVELAND 15, OHIO
H. W. Kaiser Company
1830 Euclid Avenue

DETROIT 7, MICHIGAN
Metrol Company
6533 Cass Avenue

HOUSTON, TEXAS
J. A. Rossiter Company
P. O. Box 1005

KANSAS CITY, MISSOURI
F. W. Hay & Company
2734 Cherry Street

LOS ANGELES, CALIF.
A. W. Anderson
164 So. Central Avenue

MINNEAPOLIS 3, MINN.
Hoyt A. Savoy
814 South 8th Street

MONTREAL 25, CANADA
T. C. Chown, Ltd.
1440 St. Catherine St., West

NEW HAVEN 5, CONN.
Daniel Smerling
P. O. Box 1160

NEW ORLEANS, LA.
Arthur C. Hays
1221-23 Carondelet Bldg.

NEW YORK 7, N. Y.
Parry Engineering Co.
184 Nassau St.

PHILADELPHIA 3, PA.
Thermix Engineering Co.
1003 Broad St. Station Bldg.

PITTSBURGH 19, PA.
Herr-Harris Company
548 William Penn Way

PORTLAND 4, OREGON
Lee & Freeman, Inc.
Room 302, Governor Bldg.
408 S. W. 2nd Avenue

RICHMOND 1, VA.
Frank Howell Company
Room 412, American Bldg.

ROCHESTER 4, N. Y.
Johnston Engineering Co.
31 Gibbs Street

ST. LOUIS 8, MISSOURI
Economy Equipment Co.
4526 Olive Street

SALT LAKE CITY 9, UTAH
The Lang Company
267 West First South
P. O. Box 479

SAN FRANCISCO 4, CALIF.
R. Herbert Lanyon
68 Sutter Street

SCHENECTADY 8, N. Y.
D. R. Whipple
8 Morris Avenue

SEATTLE 4, WASH.
Lee & Freeman, Inc.
1550 First Ave., South

WASHINGTON 11, D. C.
T. W. McGuire Company
137 Kennedy Street, N.W.

HEACON

THE THERMIX CORPORATION

Project & Sales Engineers

FIRST NATIONAL BANK BLDG. GREENWICH, CONNECTICUT

MORE STEAM with LESS FUEL at LOWER COST

1948 installation in plant of large Eastern corporation. Æ Perfect Spread Stoker with dumping grate. B & W boiler. Unit has capacity of 47,000 lb. per hour continuously and maximum output of 55,000 lb. per hour. Designed to burn any high volatile bituminous coals available in the territory.

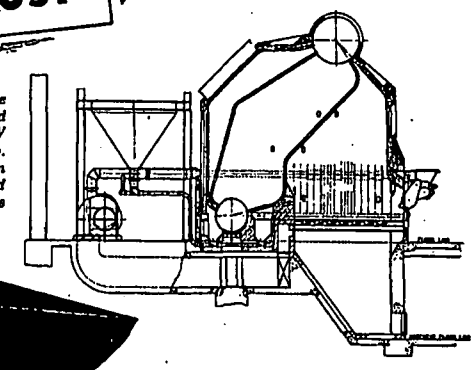

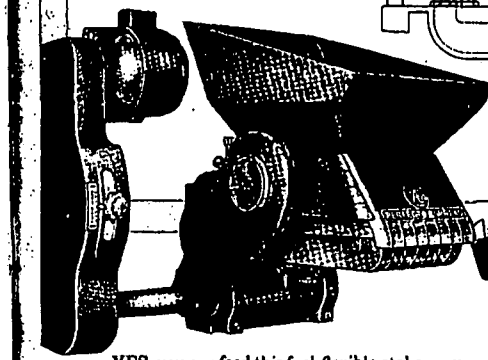

Won't Clog on Wet Coal!

YES, you can feed this fuel-flexible stoker any size or grade of coal—even damp, wet or partially frozen—and it operates readily, *steadily* without clogging. And because every possible pound of steam is obtained from the minimum quantity of fuel, you can burn *more efficiently*, a lower grade of coal than you may now be using.

There's always plenty of steam—because the stoker responds quickly to changes in steam demand . . . running from banked fire to maximum capacity in a few minutes.

Regardless of whether you're now hand-firing your boilers or want to replace tired, worn-out, inefficient combustion equipment, you'll applaud the many exclusive Æ features that assure consistently thorough combustion performance. Reduce *your* boiler room costs with an Æ Perfect Spread Stoker. Write for descriptive booklet today!



FREE—

Get this informative booklet on the Æ Perfect Spread Stoker today. Write Dept. 00.

PERFECT SPREAD Æ STOKER

with Travelling, Dumping or Stationary Grates

A PRODUCT OF

AMERICAN ENGINEERING COMPANY

2400 ARAMINGO AVENUE, PHILADELPHIA 25, PA.

New York Office—75 West Street, N.Y., N.Y.

IN CANADA: *Affiliated Engineering Corporations Limited, Montreal and Toronto*