APPLICATION
BASIC INSULATION
PIPE AND FITTINGS

URETHANE:

G. 11.3 After the vapor barrier mastic has been applied to both line insulation and the cover and it has dried, this gap shall be packed with fiberglas to within 1/4 of an inch of the surface of the line covering. See figure 52 A. This 1/4 of an inch shall be filled with 30-45 mastic to seal the joint. See figure 52 B.

FIG. 52 A

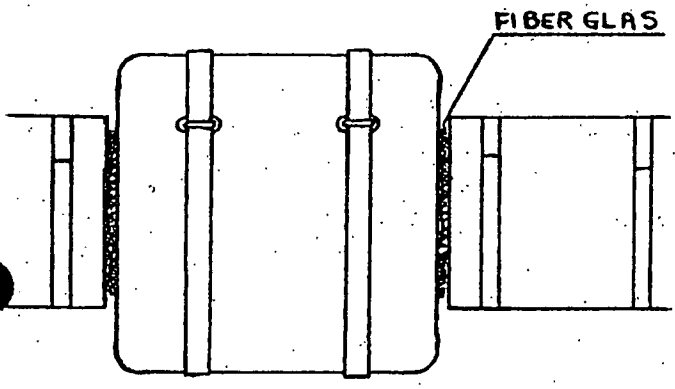

FIG. 52 B

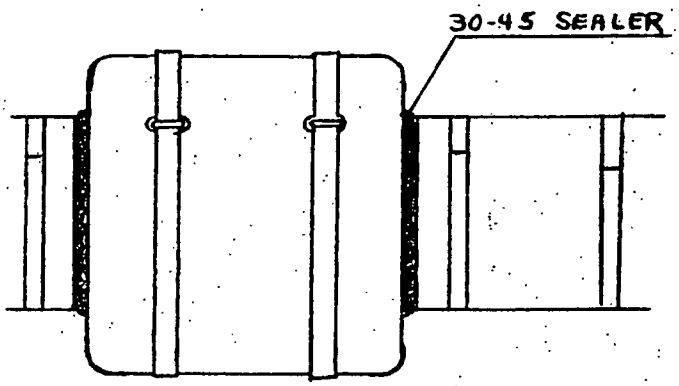

H. Valve Packing Glands:

1. Screwed valve covers:

1.1 Figure 53 A shows a cutaway view of the packing gland assembly of a screwed gate valve. A screwed globe valve is of similar construction.

1.2 The insulation covers for these valves shall be applied allowing sufficient clearance below the packing nut (c) to be screwed down without damaging the insulation or vapor barrier. See figure 53 B.

FIG. 53 A

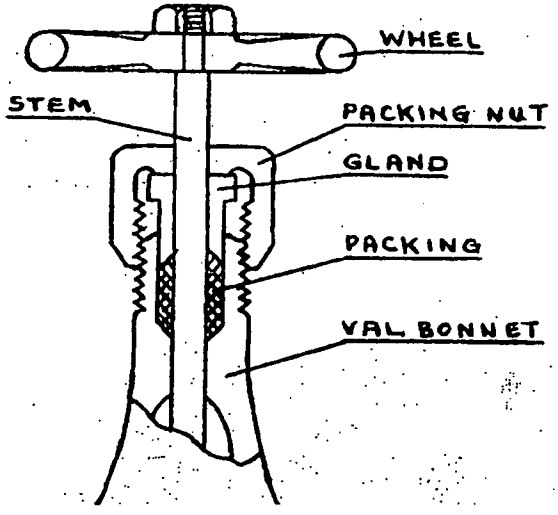

FIG. 53 B

