WHERE ARE AUTOMOTIVE ADHESIVES G-O-I-N-G ?

PART I

HOW MANY TIMES, over the last 10 years, have you read headlines such as these?

We are on the threshold of a technological explosion in the adhesives industry!

Explosive growth seen for automotive adhesives use in car assembly!

Are these statements true, and just where are we going and how do we get there in expanding the use of automotive adhesives? Why should anyone (other than adhesive manufacturers) want to expand adhesive usage, anyhow? These are the questions I should like to try to answer, using the guideposts of the past and present to project the future.

To see where we are today, we have only to examine the diagram of the 1971 Plymouth (Fig. 1), where the numbers represent adhesive applications and the letters sealer usage, to get a broad outlook of one car manufacturer's experience. Sealers are included in this discussion, because they are basically gap filling adhesives, and in many cases it is impossible to differentiate between the primary function—holding parts together or sealing out dirt, water and fumes. Many of these applications have been in use for 10 years or more and, although the material composition may have changed, the basic function has remained the same. Other applications are very recent improvements in car assembly, and some of these as well as some of the older usages are in a state of ferment or change today. Later on, we will go into detail on some unique new uses and where we see major changes occurring.

Adoption of new adhesives, and replacement of older methods of joining, will be evolutionary rather than revolutionary. The design and engineering of automobiles, as well as their production, is a complex and time consuming process. Durability, safety, sound engineering, and manufacturing feasibility must all be investigated and proven out before changes are made. Development of new processes and proving them out takes a great deal of time—and this is particularly true with regard to adhesives. Some of the more important considerations are the following:

Adhesives and sealants must perform satisfactorily for the life of the car.

They must perform their bonding function over a broad temperature range, −40° to over 200°F.

They must have resistance to humidity, salt, solvents (including gasoline), shock and vibration. For products used in exterior applications, they must also be unchanged by sunlight or ultraviolet light.

They must not age, harden, lose flexibility or bond strength under these various exposure conditions.

They must be compatible with a wide range of materials—paints, rubber, plastics, fabric and various metals.

They must be adaptable to the high speed, mass production methods of automotive fabrication, and be applied with relatively simple equipment.

They must meet all company, state and federal codes relating to worker safety, fire hazard and air pollution.

By Sumner B. Twiss President
Chemical Div., Chrysler Corp.

DSW 586929

STLCOPCB4092263

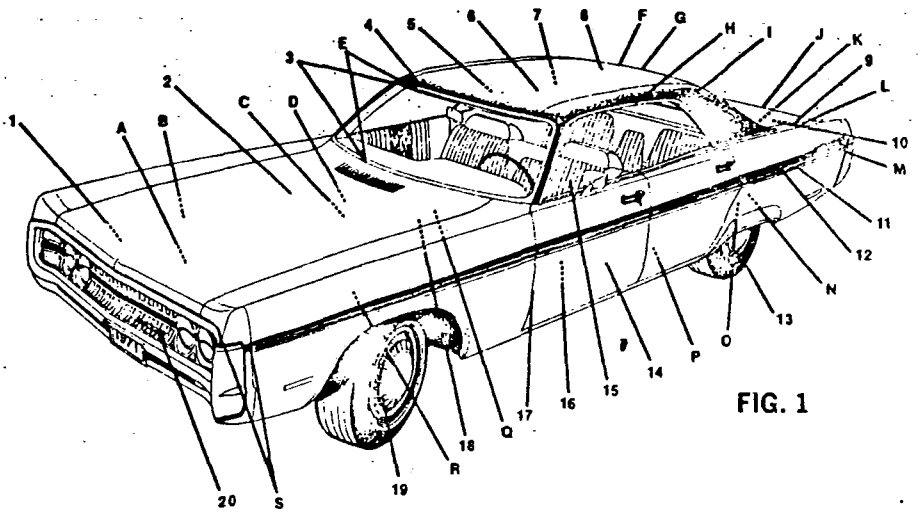

FIG. 1

AUTOMOTIVE ADHESIVES

continued

TABLE I—CAR APPLICATIONS

ADHESIVES

1—Hood Inner-Outer Panel Structural Adhesive
2—Hood Decal with Pressure Sensitive Adhesive (High Performance Cars Only)
3—Polysulfide Windshield Adhesive-Sealer
4—Vinyl Roof Seam—Hot Melt Adhesive
5—Roof Silencer Pad Solvent Adhesive
6—Vinyl Roof Solvent Adhesive
7—Roof Bow-to-Roof Structural Adhesive
8—Head Lining Solvent Adhesive
9—Deck Lid Weatherstrip Solvent Adhesive
10—Deck Lid Adhesive Sound Deadener
11—Vinyl Protective Side Molding—Pressure Sensitive Adhesive
12—Rallye Stripes Pressure Sensitive Adhesive
13—Brake Lining to Shoe Structural Adhesive
14—Wood Grained Vinyl Side Panels (Station Wagon Only) Pressure Sensitive Adhesive
15—Seat Insert Hot Melt Sheet for Bonding to Vinyl
16—Door Trim Panel Solvent Adhesive
17—Door Weatherstrip Solvent Adhesive
18—Transmission Band and Clutch Facing Structural Adhesive
19—Disc Pad Integrally Bonded Disc-Shoe Assembly
20—Medallion and Nameplate Pressure Sensitive Adhesive

SEALERS

A—Cylinder Head Gasket Sealer
B—Stud and Screw Sealant
C—Fire Wall Seam Sealant
D—Fire Wall Grommet Sealer
E—Secondary Glass Sealer
F—Back Light Butyl Tape Sealant
G—Back Light Secondary Sealer
H—Roof Drip Rail Exterior Sealant
I—Roof to Quarter Panel Plastic Body Solder Joint (Under Vinyl Roof)
J—Gas Tank to Filler Tube Sealant
K—Trunk Seam Sealant
L—Rear Deck Drain Trough and Exterior Seam Sealant
M—Non-Expandable, Weld Through Interior Seam Sealant
N—Expandable Weld Through Interior Seam Sealant (Quarter Panel to Wheelhouse)
O—Wheelhouse to Floor Pan Plug Sealant
P—Floor Pan Interior Seam Sealant
Q—Expandable Weld Through Seam Sealant (Cowl Panel Assembly)
R—Shock Absorber Cap Gasket Sealant
S—Vinyl Plastisol Exterior Seam Sealant

In many cases, they must bond to oily or partially contaminated surfaces. The "white glove" practices of aircraft manufacture are excessively costly.

The economics of the bonding process must be favorable, compared to alternative methods of assembly.

There are, of course, many more specific requirements for each adhesive usage, but these are too detailed to take up here.

EACH HAS DISADVANTAGES

Each of the adhesives listed in Fig. 1 and Table I may be classified into one of the following types, each of which has its advantages and disadvantages:

Solvent or Evaporative Adhesives. The bond is established by removal of solvent. Advantages are low cost, fast grab, good peel strength. Disadvantages are need to exhaust fumes, possible air pollution, only moderate shear strength.

Structural Adhesives. These are cured by chemical reaction, either at room temperature (two part system) or elevated temperature (one part). Advantage is high strength of bond. Disadvantages are either need to mix several components, or to hold parts together until cured in paint ovens.

High Solids Sealers. These are all cured by reaction or fusion at elevated temperature. Advantages are no solvent fumes, bonding to oily surfaces in some cases, easy application. Disadvantage is need to hold parts together until cured in paint oven.

Pressure Sensitive Adhesives. These remain permanently tacky, but may harden with age. Advantages are fast bond formation, no solvent fumes, easy application. Disadvantages are limited strength and need for clean surfaces.

Hot Melt Adhesives. These harden simply by cooling from the molten state. Advantages are fast bonding and no solvent fumes. Disadvantages are strength of bond and need for specialized application equipment.

STRUCTURAL ADHESIVE BONDING

Reactive type adhesives are the principal products used in structural bonding because they are unquestionably the most versatile

DSW 586930

STLCOPCB4092264

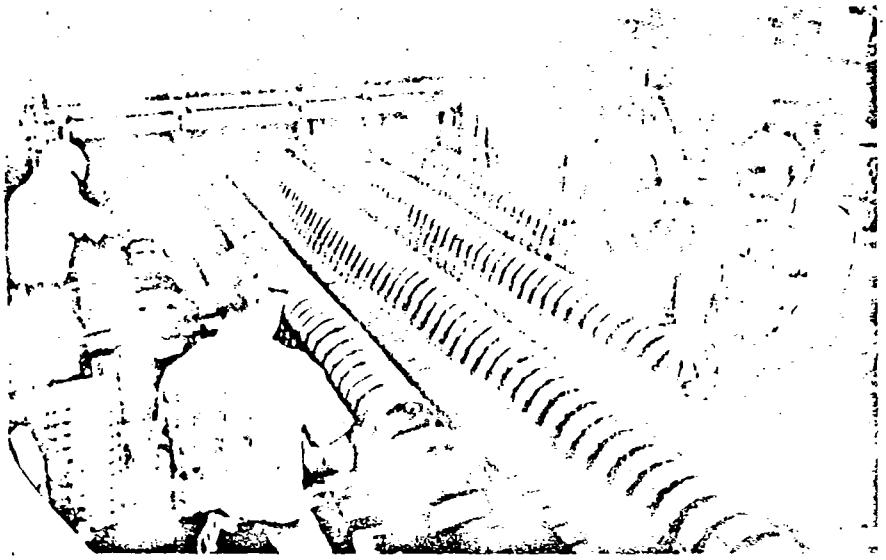

FIG. 2
Production bonding of drum brake linings. Clamped assemblies entering curing oven.

BRAKE APPLICATIONS

and effective resins capable of developing good wetting and forming bonds with high structural strength by "in situ" reaction. This type of adhesive is used wherever there is a need for either

1—a bond stronger than one of the substrates bonded, or

2—to replace spot-welding, riveting or bolting where a continuous bond will equal or exceed the strength of the total structure having intermittent points or mechanical attachment, or

3—where a very thin material must be attached to a thicker member.

The earliest and most successful application of structural adhesive is the nitrile phenolic used for bonding brake linings and transmission bands, which was first introduced by the Chrysler Chemical Div. in 1949. Since that time, about a quarter of a billion brake linings have been bonded by Chrysler, as shown in Fig. 2, without a single known bond failure in the field.

In 1971 cars, Chrysler Chemical again scored a first with the introduction in large scale production of integrally bonded disc pads to disc shoes. This process involves the use of a modified phenolic adhesive having high heat resistance which is first applied to the brake shoe by spraying. Solvent is removed from the adhesive in a drying oven, and the adhesive coated shoe is then placed in contact with the uncured disc pad preform in a multiple cavity die. This die, shown in Fig. 3, is then placed in a heated press where the assembly is heated to 310°F for 12 minutes, under a pressure of 1000 psi. After removal from the die, the assemblies are further cured for 11 hours at 300°F under pressure.

FIG. 3
Placement of adhesive-coated disc pad shoe into mold for integral bonding of disc pad assemblies.

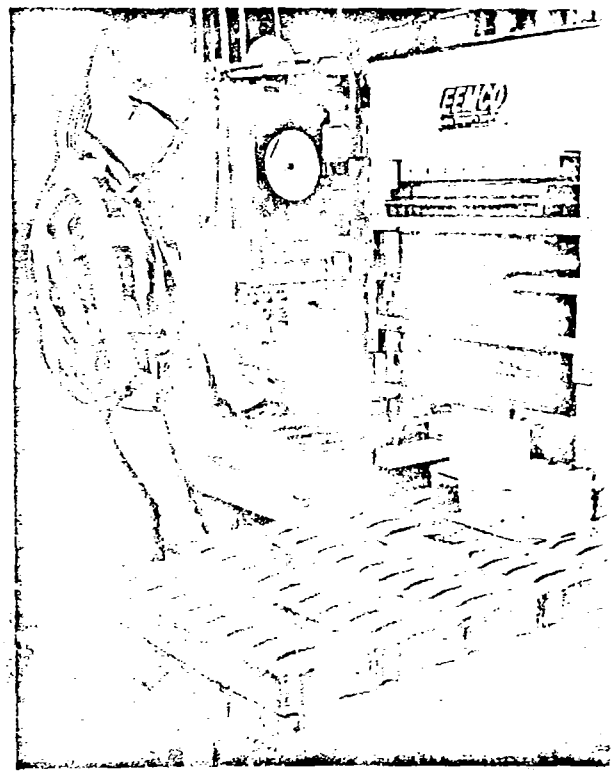

DSW 586931

The advantages of integrally bonding are:

Increased bond strengths, 10,000 lbs shear strength as compared with 2500 lbs for riveting

Higher degree of safety and quality assurance

Larger surface of braking area (no rivet holes) and longer wear

Another group of reactive resin adhesives used for structural bonding is the epoxy and modified epoxies, which are now finding ever wider uses in the automobile. A modified epoxy adhesive was used by General Motors for bonding the roof rail retainer in a 1970 model. Epoxies require clean surfaces, and in this case necessitated a solvent wipe of the surfaces to be bonded. General Motors also introduced the use of a heat curing epoxy applied by flow gun for bonding the roof to the quarter panel of the 1971 Vega. The surfaces are solvent cleaned, but not bonderized.

Ford Motor Co. uses epoxy adhesives to bond fiber reinforced plastic (FRP) parts to steel in a truck cab application. Also, Ford uses polyester

STLCOPCB4092265



Fig. 4 **DECK APPLICATION**

Extrusion of vinyl plastisol adhesive onto underside of deck lid prior to assembly.

and polyurethane adhesives for bonding plastics in the FRP truck cab assembly. It is expected that much broader applications for epoxies lie in bonding of body sections to replace spot welding, because of the high strength of the epoxy adhesives and the clean, smooth joints which can be obtained.

There are many structural uses for vinyl plastisol adhesives, which undergo fusion and hardening at elevated temperatures, but are not necessarily chemically reactive, like the phenolics and epoxies. For many years, the inner to the outer panel of hoods (and deck lids) have been bonded together with a vinyl "hershey drop" adhesive, so named because the adhesive is extruded onto the underside of the hood in a pattern of large drops, as shown in Fig. 4. When the inner spider shaped panel is placed in contact, the assembly is held together by hem flanging or folding over the edges, which are then spot welded.

The "hershey drop" or hood adhesive is cured when the hood assembly passes through the paint bake ovens. Some auto companies have replaced spot welding of hem flanges by bonding with vinyl plastisol. This use has the added advantage of sealing the hem flange from corrosion.

PREVENTS HOOD 'FLUTTER'

The primary purpose of the "hershey drop" adhesive is to reinforce the outer hood panel and prevent hood "flutter." Generally, the flatter the hood, the greater the need for reinforcement. A similar need exists to prevent flutter and oil canning of the car roof, so that in recent times, the

AUTOMOTIVE ADHESIVES

continued

same type of vinyl plastisol adhesive has been adopted for bonding the roof bow reinforcing members to the underside of the roof panel. Fig. 5 shows the application of the vinyl adhesive by flow gun to the roof bows. Fig. 6 shows the placement and clamping of the roof bows to the underside of the roof panel. At each side, where the roof bow reinforcing member joins the roof rail, the roof bow, roof and roof side rail are welded.

A new application of a high strength vinyl plastisol resin, and a unique design, is the development by General Motors of the "double-shell top" where the inner and outer roof panels are bonded together, as shown in Fig. 7. This development is somewhat similar to the hood inner and outer panel assembly, except that a solid inner panel is used, joined together by both adhesive bonding and welding. Of interest is the fact that the roof panel assembly is hem flanged around the periphery and bonded with the same high strength plastisol resin. The concept reduces in half the number of parts required for the conventional roof structure.

In most of these applications, the unique characteristic of the vinyl plastisol adhesive is that it will bond to oily metal surfaces—no cleaning is necessary. Further, the adhesive in the uncured state will resist Bonderite washout, will accept paint primer and cures in the primer oven.

Future applications of structural adhesives depend upon the design engineer, the adhesive chemist, and production engineers cooperating to the fullest extent to replace the majority of spot welding in the body with adhesive joining. This can be done, and is being done today, with the attendant advantages of

Smooth body joints, requiring less metal finishing and solder application.

Reduced noise due to elimination of metal-to-metal contact.

Elimination of the need for sealers over the spot welded joints, because the adhesive both bonds and seals.

Reduced corrosion in these joints due to sealing out moisture.

Copies of this article are available as long as the supply lasts. Write on company letterhead—AUTOMOTIVE INDUSTRIES, 1 Decker Square, Bala-Cynwyd, Pa. 19004
Request Article No. 151

Part II will appear in a forthcoming issue.■

DSW 586932

STLCOPCB4092266



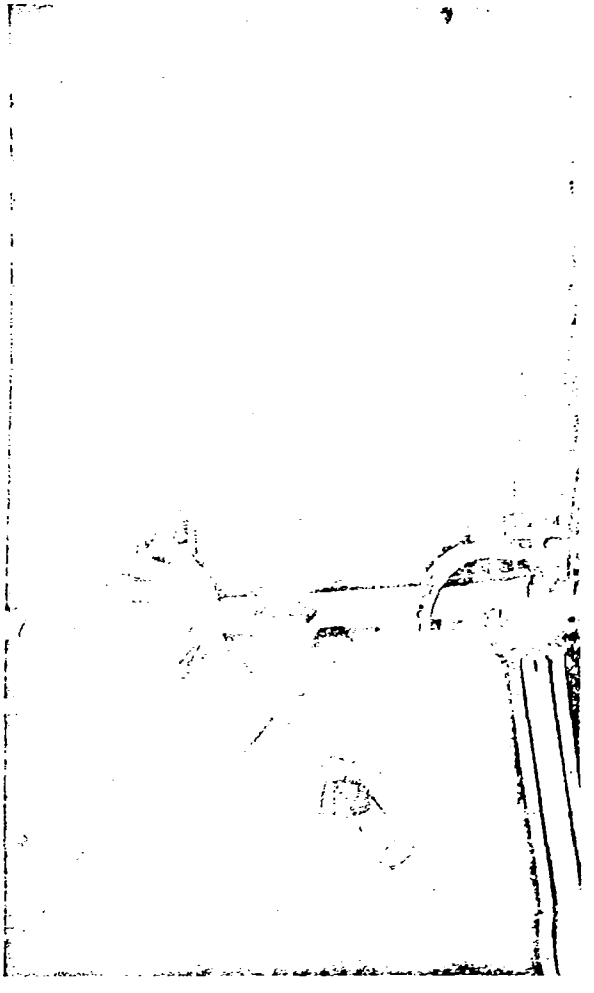

ROOF APPLICATIONS

Fig. 5 Application of structural adhesive to roof bow reinforcement members.

Fig. 6 Placement of pre-coated roof bow to underside of roof panel.

Fig. 7 General Motors' "double shell top" is joined together by both adhesive bonding and welding.

