PLAINTIFF'S EXHIBIT

ASI-464

AMERICAN STANDARD

G-2 GAS BOILER

INSTRUCTION MANUAL

SUPPLEMENT FOR STEAM BOILERS FLUSH OR DELUXE JACKETS

CERTIFIED BY AMERICAN GAS ASSOCIATION

NOTICE TO INSTALLER AND OPERATOR
THIS BOOKLET MUST BE AFFIXED ON OR ADJACENT TO THE HEATING EQUIPMENT

BP-8048-G2-Sup.
Rev. 6/69

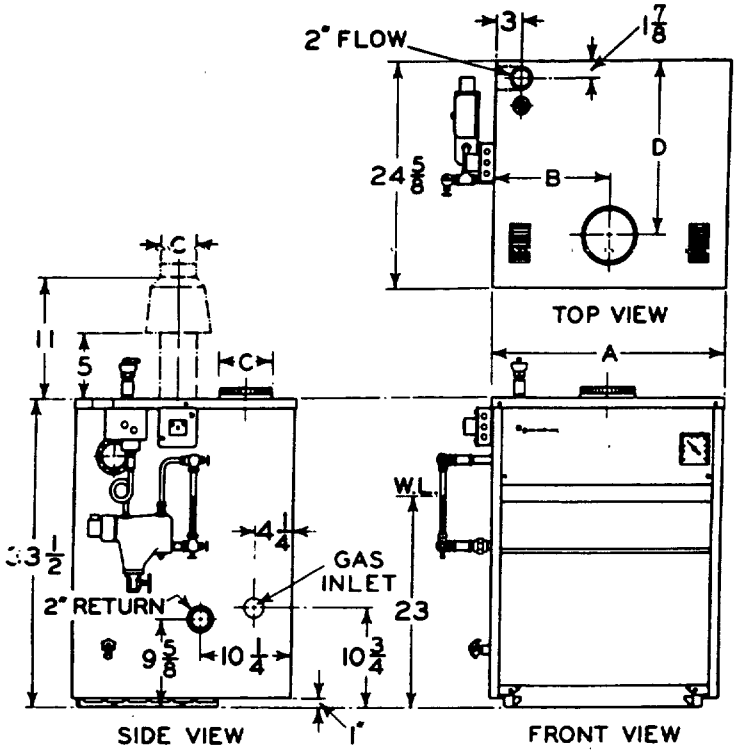

BOILER NUMBER	No. OF SECTIONS	No. OF BURNERS	A	B	C	D
G-23D	3	2	13 1/8	6 9/16	4	11 5/8
G-24D	4	3	16 3/8	8 3/16	5	19 1/2
G-25D	5	4	19 5/8	9 13/16	5	19 1/2
G-26D	6	5	22 7/8	11 7/16	6	19
G-27D	7	6	26 1/8	13 1/16	6	19
G-28D	8	7	29 3/8	14 11/16	7	19 3/8
G-29D	9	8	32 5/8	16 5/16	7	19 3/8
G-210D	10	9	35 7/8	17 15/16	8	19 1/8
G-211D	11	10	39 1/8	19 9/16	8	19 1/8

NOTE - EXTERNAL DRAFTHOOD IS ONLY PROVIDED FOR G-23-D BOILER

FIG. 1 - STEAM BOILER WITH DELUXE JACKET

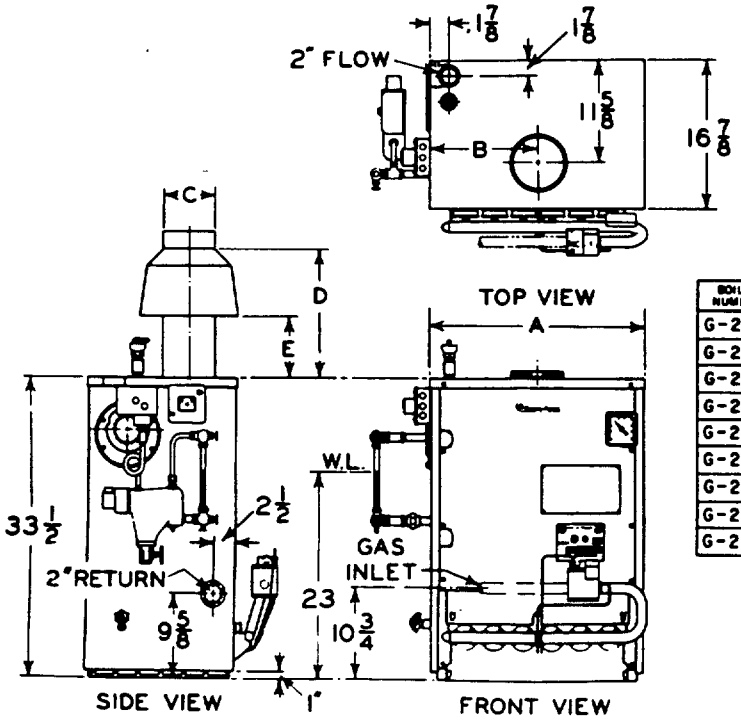

BOILER NUMBER	No. OF SECTIONS	No. OF BURNERS	A	B	C	D	E
G-23F	3	2	11	5 1/2	4	11	5
G-24F	4	3	14 1/4	7 1/8	5	14	7
G-25F	5	4	17 1/2	8 3/4	5	14	7
G-26F	6	5	20 3/8	10 1/8	6	16 1/2	9
G-27F	7	6	24	12	6	16 1/2	9
G-28F	8	7	27 1/8	13 5/8	7	20 1/8	12
G-29F	9	8	30 1/2	15 1/4	7	20 1/8	12
G-210F	10	9	33 5/8	16 7/8	8	25 1/8	16
G-211F	11	10	37	18 1/2	8	25 1/4	16

FIG. 2 - STEAM BOILER WITH FLUSH JACKET

04988

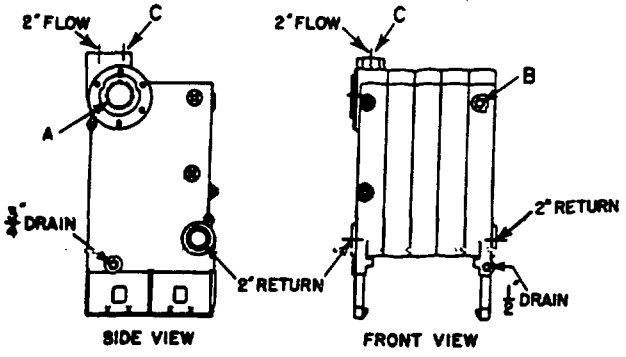

SECTION ASSEMBLY SHOWING TAPPINGS FOR STEAM BOILER

CONTROL APPLICATION		
LOCATION ON BOILER	SIZE OF TAPPING	CONTROLS
A	3"	BLOW-OFF
B	1/2"	PRESSURE GAGE
C	3/4"	SAFETY VALVE

FIG. 3 - LOCATIONS OF TAPPINGS FOR BOILER CONTROLS

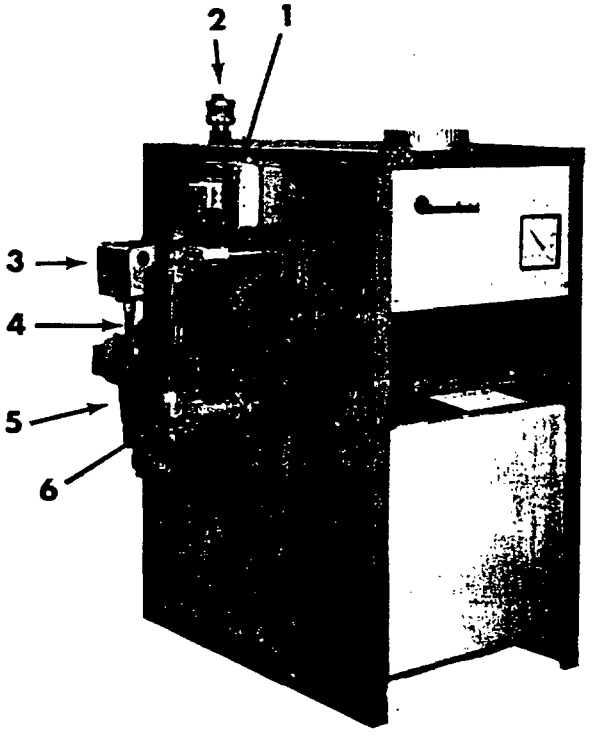

FIG. 4 - BOILER WITH WATER COLUMN TRIM AND CONTROLS

1. JUNCTION BOX
2. SAFETY VALVE
3. STEAM LIMIT CONTROL
4. SYPHON FITTING
5. LOW WATER CUTOFF
6. WATER GAUGE

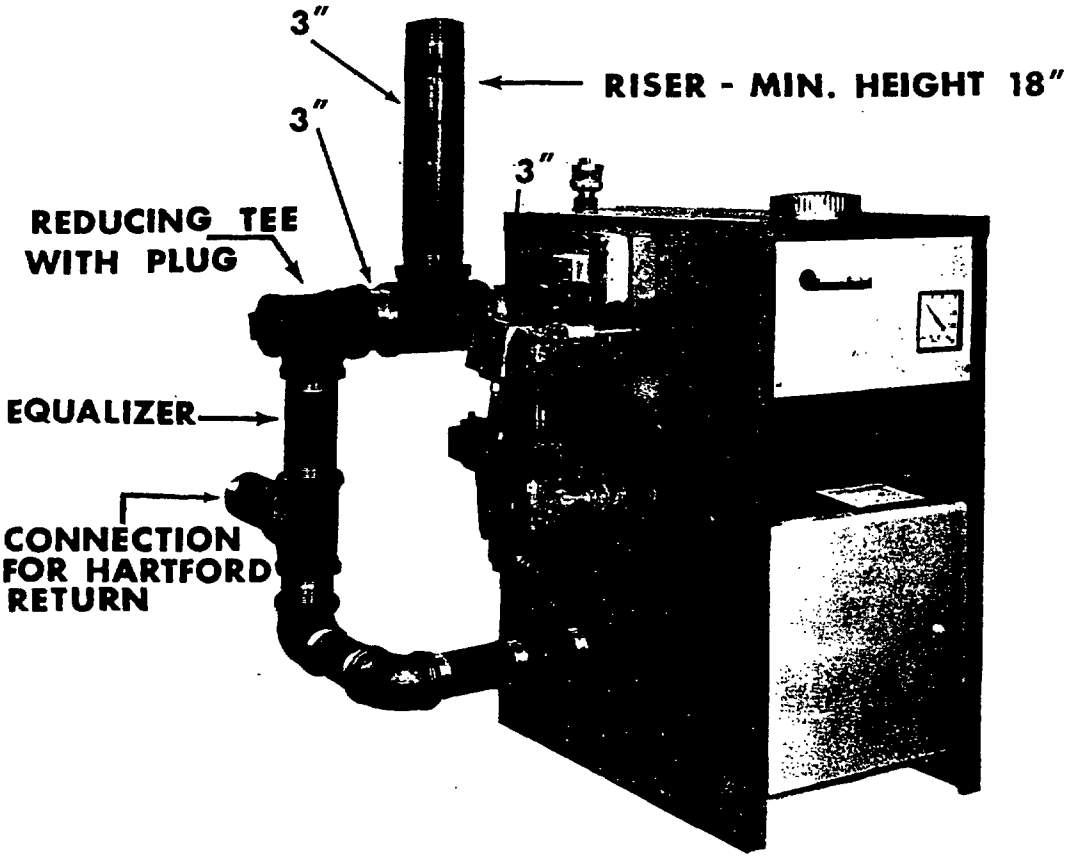

BOILER NUMBER	RISER (IN.)	RETURN (IN.)	EQUALIZER (IN.)
G-23	3	2	1-1/2
G-24	3	2	1-1/2
G-25	3	2	1-1/2
G-26	3	2	1-1/2
G-27	3	2	1-1/2
G-28	3	2	2
G-29	3	2	2
G-210	3	2	2
G-211	3	2	2

FIG. 5 STEAM NEAR BOILER PIPING

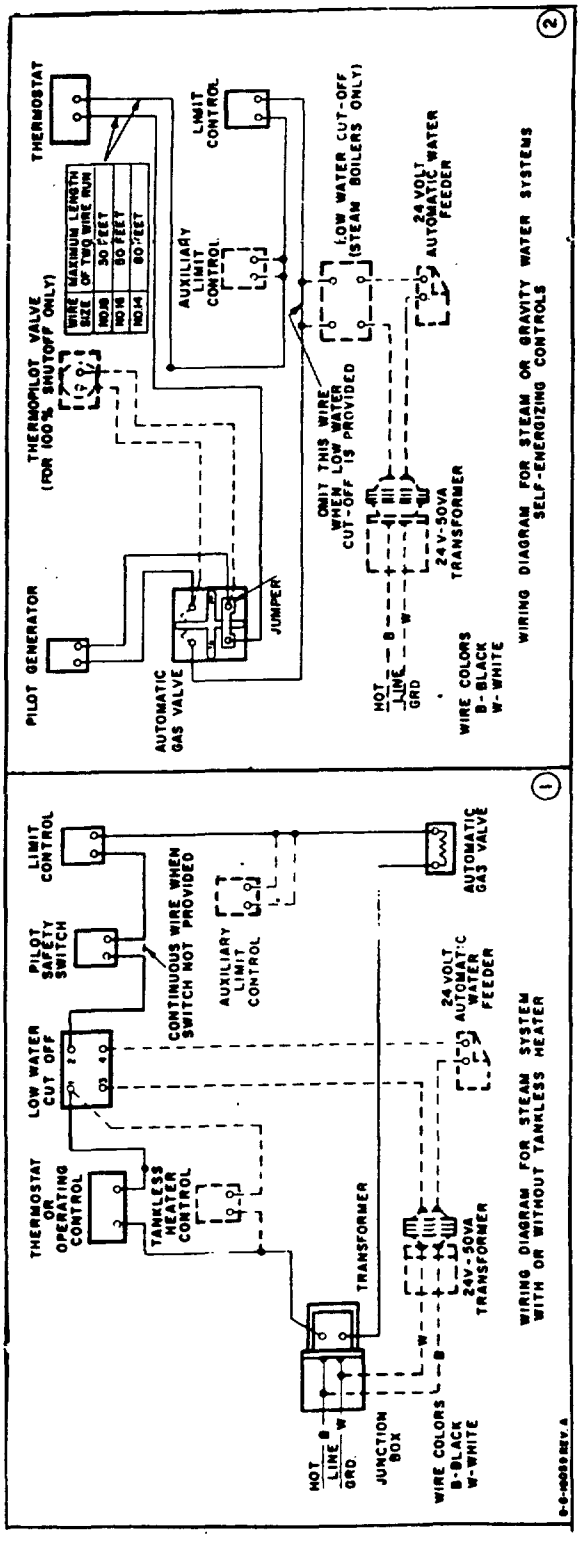

NOTE: All wiring inside boiler jacket must be 105°C approved wire. This wire is furnished with the boiler.

REFER TO WATER BOILER INSTALLATION MANUAL PACKED IN PLATEWORK AND CONTROL BOX FOR DETAILS NOT INCLUDED IN THIS SUPPLEMENT.

INSTALLATION OF JACKET - Proceed as directed in the Installation Manual for water boilers, with the following exceptions:

FLUSH TYPE JACKET - Select L.H. Side Panel (has 7-5/8" diameter knockout) and remove this knockout for all steam boilers also two knockouts for water gauge connections.

DELUXE TYPE JACKET - Select L.H. Side Panel (has 4" diameter knockout within a 7-5/8" diameter knockout) and remove the 4" knockout for all steam boilers. Remove two knockouts for water gauge connections. Assemble steam gauge to right end section with pipe nipple and coupling provided before assembling the jacket.

INSTALLATION OF WATER COLUMN TRIM AND CONTROLS: - (REFER TO FIGURE 4) -

1. After assembly of the jacket install a 1/2" x 4-1/2" brass pipe nipple in the lower 1/2" water gauge tapping.
2. Install the low water cutoff on this nipple before connecting any piping to the return tapping.
3. Install a 1/2" x 4-1/2" brass nipple together with the tee connecting fitting from the low water cutoff in the upper 1/2" water gauge tapping.
4. Install the brass tube and connectors as illustrated in the instruction sheet provided with the low water cutoff.
5. Install the water gauge fittings and gauge glass.
6. Install the syphon fitting in the 1/4" pipe tapping on top of the low water cutoff and assemble the steam limit control to the syphon.
7. Install the safety valve in the 3/4" tapping on top of the boiler using the nipple and coupling provided also install the drain cock in the 3/4" tapping at the left side of the boiler.
8. Mount the junction box on the jacket side panel with the sheet metal screws provided. Connect wiring to accord with applicable installation shown on the wiring diagram for steam boilers.

Figure 5 shows a typical method of connecting the supply and return piping to the steam boiler. Return connections should be made through a Hartford loop. ALL SUPPLY AND RETURN PIPING SHOWN IS NOT SUPPLIED BY A.R. and S.S. CORP.

FILLING SYSTEM

CAUTION: - Never start boiler unless it is properly filled with approximately 4-3/4" of water visible in the gauge glass. After boiler is in operation, make-up water should be added slowly.

CHECK-UP OF LOW WATER CUTOFF

1. Light pilot in accordance with applicable instructions shown in the installation manual for water boilers. Turn thermostat to highest temperature. Automatic gas valve should open
2. Open blow-off valve on bottom of cutoff and drain water until the water level in the boiler drops to approximately 1/4" visible in the gauge glass. Automatic gas valve should close.
3. Refill until water level is approximately 4-3/4" visible in gauge glass. Automatic gas valve should open.

MAINTENANCE OF BOILER WHILE IN OPERATION

1. Check level regularly and add water slowly when needed.
2. This boiler is fired automatically.
3. Test safety valve at beginning of season and once a month, thereafter:-
   a. Fasten cord or wire to valve lever.
   b. When pressure is up, stand safe distance away and pull cord.

CLEANING BOILERS - The grease used to lubricate the cutting tools during erection of new piping systems serves as a carrier for dirt, with the result that a scum of fine particles and grease accumulates on the surface of the water in all new boilers, while heavier particles may settle to the bottom of the boiler and form sludge. These impurities tend to cause foaming, preventing the generation of steam and causing an unsteady water line.

This unavoidable accumulation of oil and grease should be removed by blowing-off the boiler as follows:

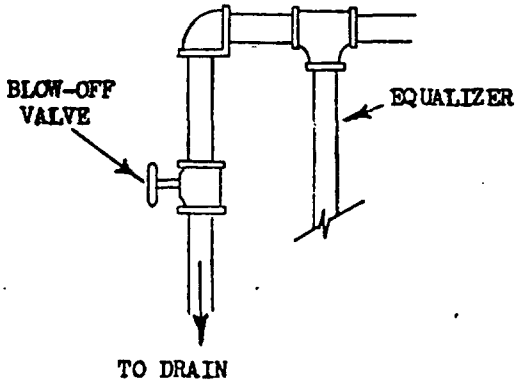

If not already provided, install a surface blow connection of at least 1-1/4" nominal pipe size with outlet extended to within 18 inches of the floor or to sewer, inserting a valve in line close to boiler. Bring the water line to center of outlet, raise steam pressure, and while burners are operating, open valve in blow-off line. When pressure recedes, close valve and repeat process adding water at intervals to maintain proper level. As a final operation bring the pressure in the boiler to about 10 lbs. close blow-off and manual shutoff valves, then open drain valve. After boiler has cooled, partly fill and flush out several times before filling it to proper water level for normal service. The use of soda or any alkali, vinegar or any acid is not recommended for cleaning heating boilers because of the difficulty of complete removal and the possibility of subsequent injury after the cleaning process has been completed. Illustration shows piping arrangement for blowing-off steam boilers.

CAUTION - After blow-off operation, a checkup should be made of the low water cutoff as directed above.

DEALER'S NAME: _____

ADDRESS: _____

TELEPHONE NO.: _____

DATE OF INSTALLATION: _____

AMERICAN STANDARD

PLUMBING & HEATING DIVISION

40 WEST 40TH STREET • NEW YORK, N Y 10018