Polychlorinated Biphenyl Analytical Results:
Results of Analysis on Fish Flesh

The chemical analysis of edible fish flesh, except where whole fish are indicated on the attached data sheets, for polychlorinated biphenyls (PCB's) was conducted at three laboratories on those fish obtained at several stations given below. The immediate supervisor of all analysis at each Laboratory is also provided.

Laboratory Location	Supervisor	Water	Station(s)
NYS Dept. of Environmental Conservation Rome Pollution Laboratory 8314 Fish Hatchery Road Rome, NY 13440	Earl J. Harris	Hudson R.	Above Corinth Above Glens Falls At Ft. Edward - below G.E. 5 miles below Ft. Edward Stillwater Catskill-Trib. 193 Kingston-Rhinecliff Bridge Mouth of Wappingers Creek Mouth of Rondout Creek Mouth of Esopus Creek Tappan Zee Bridge George Washington Bridge area
NYS Dept. of Agriculture and Markets State Food Laboratory Laboratory Building #7 1220 Washington Avenue Albany, New York 12235	Dr. Elmer George, Jr. Director	Hudson R. Mohawk R. Rondout Cr.	Waterford Little Falls Below Schenectady Bloomington
NYS Dept. of Health Division of Laboratories and Research Griffin Laboratory Guilderland, NY 12084	Dr. Brian Bush	Walloomsac/ Hoosic R.	Walloomsac River in Hoosic Hoosic River above Johnsonville

A copy of the analytical procedures used by each of the Laboratories is attached as Appendix A. The calculation sheets, analytical reports and chromatographs pertaining to the analysis of fish at the above stations are available at each respective laboratory for inspection.

The data relating to dates of collection, location of collections, species of fish and numbers of each species of fish analyzed, length and weight of each fish, identification of each sample of fish, the PCB content of the fish analyzed, and if provided, the oil and DDT content of the fish analyzed, is given on the attached tables numbered 1 thru 21 .

PROTECTED MATERIAL: MONSANTO INSURANCE COVERAGE LITIGATION

IF THE FILM IMAGE IS LESS CLEAR THAN THIS NOTICE, IT IS DUE THE QUALITY OF THE ORIGINAL DOCUMENT.

HDO 86

NO. 2 BLOW TANK

AROCLOR 5060

Innage Inches	% Full	Gallons	Innage Inches	% Full	Gallons	Innage Inches	% Full	Gallons
0	0.7	307	33	31.2	1,141	66	66.6	1,975
1	1.2	332	34	32.2	1,166	67	67.7	2,000
2	1.6	357	35	33.4	1,191	68	68.7	2,026
3	2.0	382	36	34.4	1,217	69	69.8	2,057
4	2.5	408	37	35.5	1,242	70	70.9	2,076
5	2.9	433	38	36.5	1,267	71	71.9	2,101
6	3.3	458	39	37.7	1,292	72	73.1	2,127
7	3.8	483	40	38.7	1,318	73	74.1	2,152
8	4.4	509	41	39.7	1,343	74	75.1	2,177
9	5.4	534	42	40.9	1,368	75	76.3	2,203
10	6.5	559	43	41.9	1,394	76	77.3	2,228
11	7.5	585	44	42.9	1,419	77	78.4	2,253
12	8.7	610	45	44.1	1,444	78	79.5	2,278
13	9.7	635	46	45.1	1,469	79	80.5	2,304
14	10.7	660	47	46.3	1,495	80	81.6	2,329
15	11.9	686	48	47.3	1,520	81	82.7	2,354
16	12.9	711	49	48.3	1,545	82	83.8	2,379
17	14.1	736	50	49.4	1,571	83	84.8	2,405
18	15.1	762	51	50.5	1,596	84	85.8	2,430
19	16.1	787	52	51.6	1,621	85	87.0	2,455
20	17.3	812	53	52.6	1,646	86	88.0	2,481
21	18.3	837	54	53.7	1,672	87	89.2	2,506
22	19.3	863	55	54.8	1,697	88	90.2	2,531
23	20.5	888	56	55.8	1,722	89	91.2	2,556
24	21.5	913	57	57.0	1,747	90	92.4	2,582
25	22.6	939	58	58.0	1,773	91	93.4	2,607
26	23.6	964	59	59.0	1,798	92	94.5	2,632
27	24.8	989	60	60.2	1,823	93	95.6	2,658
28	25.8	1,014	61	61.2	1,849	94	96.6	2,683
29	26.8	1,040	62	62.3	1,874	95	97.7	2,708
30	28.0	1,065	63	63.4	1,899	96	98.6	2,733
31	29.0	1,090	64	64.4	1,924			
32	30.2	1,115	65	65.5	1,950			

Data for Sheet based on filling tank with water during start-up, June 1964. Straight side 25.3 gals/in.

PROTECTED MATERIAL: MONSANTO INSURANCE COVERAGE LITIGATION

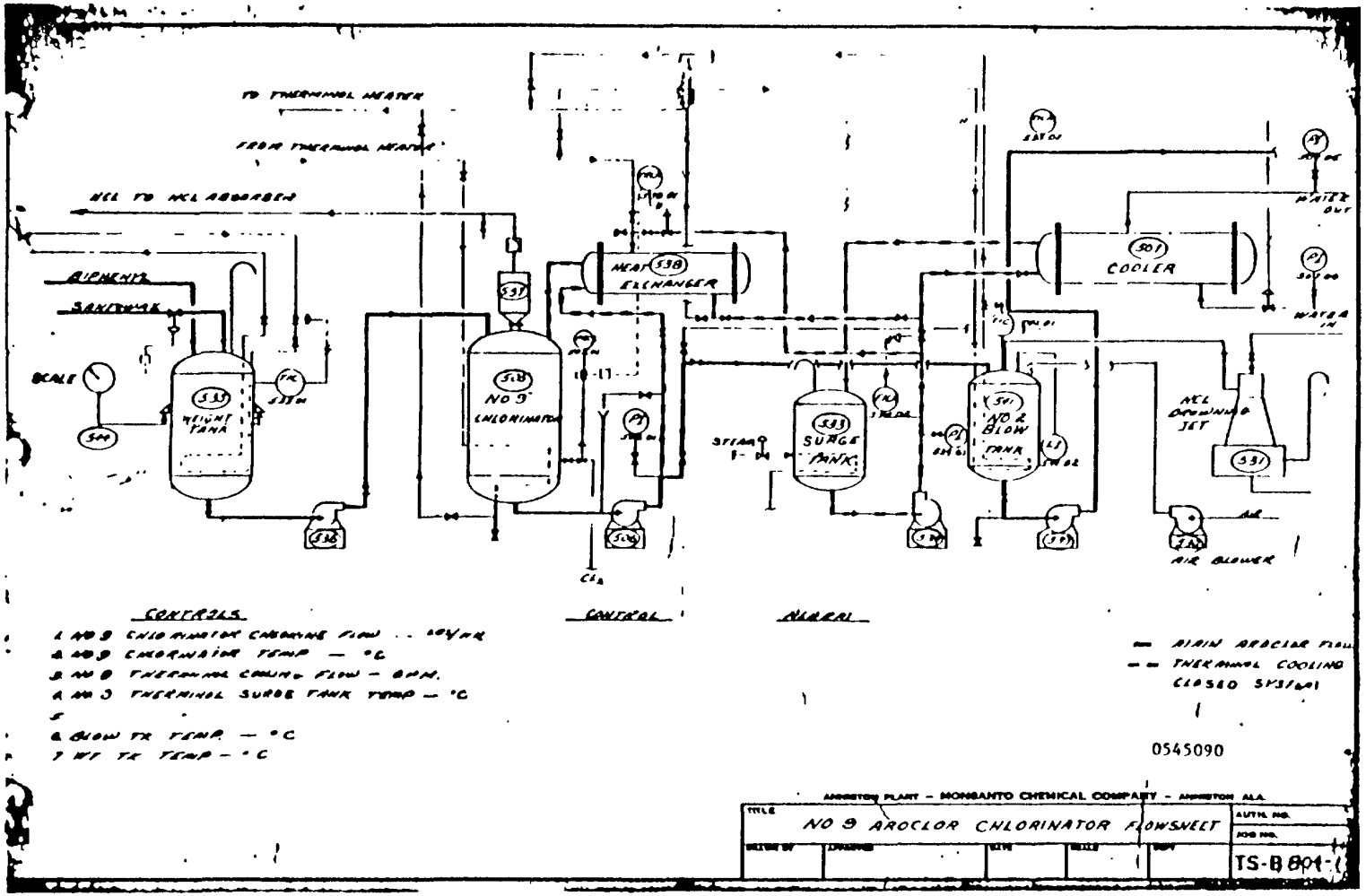

IF THE FILM IMAGE IS LESS CLEAR THAN THIS NOTICE, IT IS DUE THE QUALITY OF THE ORIGINAL DOCUMENT.

HDO 86

8 9 E 1

IF THE FILM IMAGE IS LESS CLEAR THAN THIS NOTICE, IT IS DUE THE QUALITY OF THE ORIGINAL DOCUMENT.

No. 4 (Solid)
Still

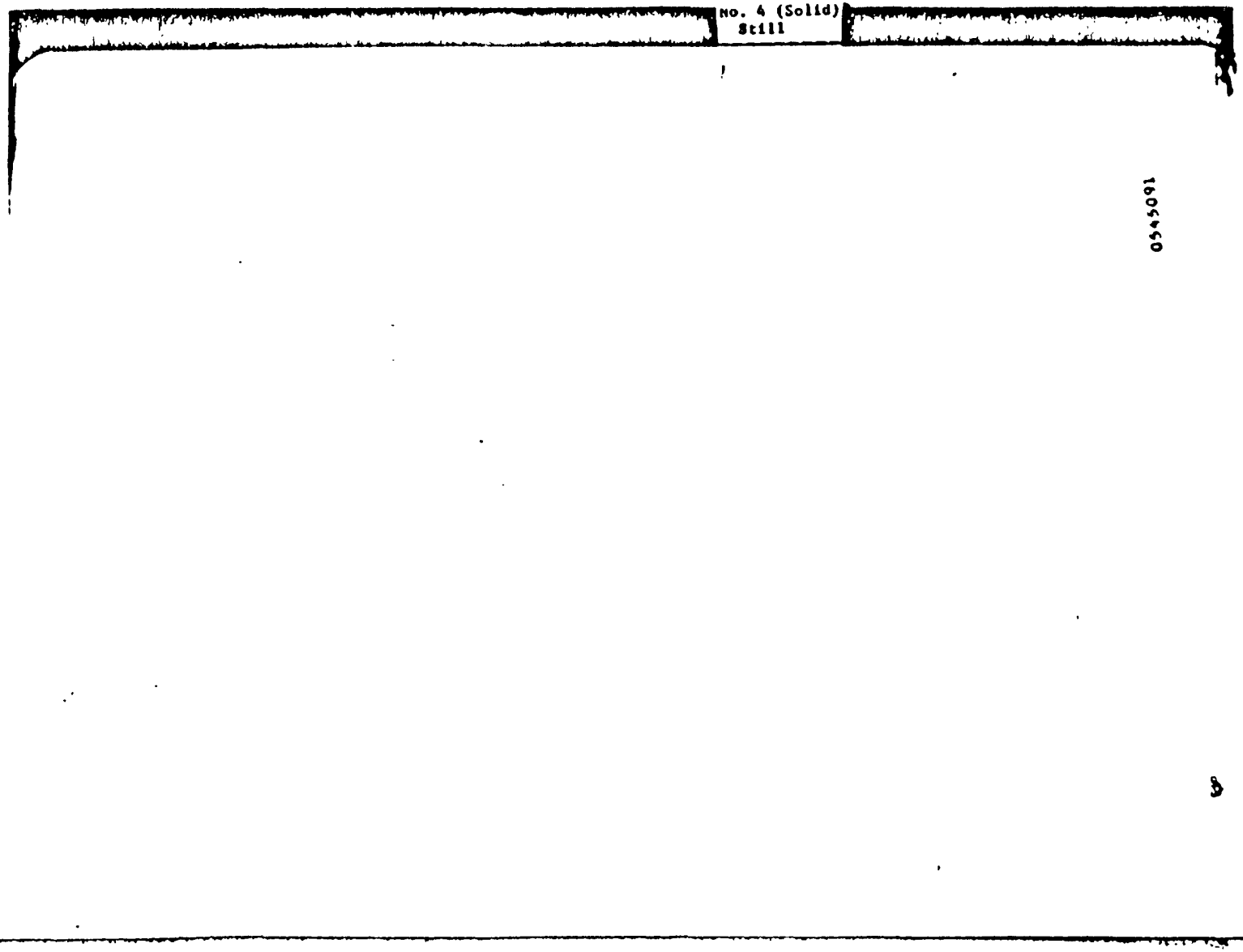

PROTECTED MATERIAL: MONSANTO INSURANCE COVERAGE LITIGATION

0545091

PROTECTED MATERIAL: MONSANTO INSURANCE COVERAGE LITIGATION

IF THE FILM IMAGE IS LESS CLEAR THAN THIS NOTICE, IT IS DUE THE QUALITY OF THE ORIGINAL DOCUMENT.

HDO 86

PROCESS FUNCTION OUTLINE

AROCLOR DEPARTMENT

I. NO. 4 STILL SYSTEM

1.1 Scope

This covers the charging, start-up, shutdown, normal operation, and emergency situations involving the No. 4 Aroclor still system.

1.2 Description of Process

Aerated crude Aroclor from a blowing tank is fed to the still tank. Hydrated lime is added to the crude Aroclor.

Vacuum is applied to the still and the Aroclor is circulated through the furnace coil and heated to the vaporization temperature. Vapors pass up an open column to the condenser. Distilled Aroclor is collected in a receiver. Quality of the distilled solid Aroclors is analyzed by the lab, and if in specification, it is drawn directly from the receiver into suitable containers or transferred to the flaker operation.

Still residue or bottoms from each 2nd distillation are drawn into containers and sold as Montars, or it is discarded in trash drums.

II. PROCESS DIAGRAM

Attached.

PROTECTED MATERIAL: MONSANTO INSURANCE COVERAGE LITIGATION

IF THE FILM IMAGE IS LESS CLEAR THAN THIS NOTICE, IT IS DUE THE QUALITY OF THE ORIGINAL DOCUMENT.

III. OPERATION OF PROCESS

3.1 Start-Up

A. Initial Start-Up

1. Therminol Cooling System for No. 4 Still Condenser

   a. Charge system with Therminol FR-2 (Aroclor 1248):

      (1) Use temporarily relocated Pyranol pump to charge Therminol surge tank (Item 622).

      (2) Position 55 gallon drum next to the pump. Remove drum bung and vent cap.

      (3) Connect flexible hose to pump suction and the stainless steel pipe to be inserted into the drum.

      (4) Position discharge line from the pump into the tank.

      (5) Open valve on pump suction; insert pipe into drum and start pump.

      (6) Adjust the suction valve on the pump until the flow is steady.

      (7) Continue to fill the surge tank until 4 drums or approximately 200 gallons total are in the surge tank (Item 622).

2. Still and Furnace Start-Up

   a. Charges to the No. 4 Still for the Various Crude Aroclors:

      Under normal conditions, crude Aroclors will be charged to the No. 4 still and the charge measured by the level indication (LI-541.02) on the No. 2

HDO 86

PROTECTED MATERIAL: MONSANTO INSURANCE COVERAGE LITIGATION

blow tank. The charges for all crude Aroclors for chlorination in the No. 9 chlorinator are based on an output from the chlorinator of 2,100 gallons. This quantity of Aroclor can be charged to the still without any problem. The still tank size is 2,500 gallons.

Aroclor 1168 is charged directly from the chlorinator to the No. 4 still. This Aroclor is not air-blown.

b. Prepare No. 2 blow tank (Item 541) for transfer of charge:

(1) Check to be sure the Therminol heating system is on the transfer pump (Item 539) and the charging lines. Material to be pumped must be hot or it will damage the mechanical seals on the transfer pumps. Cold lines can also cause plug-ups and failure to transfer material.

(2) Check temperature of material in blowing tank to be sure it is hot enough to transfer (170°C. minimum). See TIC-541.01.

(3) Check with the chlorinator operator to be sure crude Aroclor has been air-blown for one hour.

c. Prepare still to receive charge:

(1) Close valve at the bottom line under the still (Item 615).

(2) Open vent valve on the still.

(3) Open valve on vent line of the still.

(4) Set valves from the No. 2 blow tank to the No. 4 still. Be sure the Therminol heating system is on all transfer lines.

IF THE FILM IMAGE IS LESS CLEAR THAN THIS NOTICE, IT IS DUE THE QUALITY OF THE ORIGINAL DOCUMENT.

HDO 86

PROTECTED MATERIAL: MONSANTO INSURANCE COVERAGE LITIGATION

(5) Close the main valve in the vacuum line to the still just above the receiver. Set the vacuum controller PIC-615.04 in "auto" with the set point at 10 mm Hg. Start steam to the vacuum jets. Put steam on stage 3, stage 2, and stage 1, in that order. Stage 1 is the closest to the receiver. Adjust water to the intercondenser on the middle stage. The jet on the No. 4 still should pull down to 4-5 mm Hg absolute on the receiver (Item 620). The steam to the jet on the No. 4 still should have a minimum of 90 psig supply pressure.

d. Start up the Therminol cooling system for the No. 4 still condenser (Item 619):

(1) Set TICA-622.01 at 120°C. with the controller in "auto".

(2) Adjust the set point for the Therminol low temperature alarm instrument TLA-623.02 approximately 20°C. below the control point for TICA-622.01. Ex: 100°C.

(3) Open the block valves in the Therminol heating system lines to the coil on the surge tank (Item 622). Set the valves in the Therminol cooling system for the No. 4 still condenser (Item 619) to allow circulation from the surge tank through the condenser through the Therminol cooler (Item 624) and back into the surge tank.

(4) Wait until the temperature of the Therminol cooling system is 100°C., then start the circulating pump (Item 623).

IF THE FILM IMAGE IS LESS CLEAR THAN THIS NOTICE, IT IS DUE THE QUALITY OF THE ORIGINAL DOCUMENT.

HDO 86

PROTECTED MATERIAL: MONSANTO INSURANCE COVERAGE LITIGATION

IF THE FILM IMAGE IS LESS CLEAR THAN THIS NOTICE, IT IS DUE THE QUALITY OF THE ORIGINAL DOCUMENT.

(5) Check the level in the surge tank (Item 622) to be sure the Therminol level covers the heating coils in the surge tank. This will be 6"-12" in the sight glass.

(6) Do not permit distillation to start until the desired set point of 120°C. has been reached in the Therminol cooling system.

Settings for the temperature controller TICA-622.01 for the Aroclors are as follows:

Aroclor No.	5460	4465	5442	1268
Set Point, °C	120°	120°	120°	170°

The fan on the Therminol cooler (Item 624) can be started when necessary to keep the temperature at the set point during distillation. It is operated manually or automatically.

(7) Check the following items on the Therminol cooling system circulation:

(a) Therminol cooling system circulating pump (Item 623) discharge pressure should be 37 psig.

(b) Circulating pump discharge temperature TIA-623.02 should read 120°C. with the low temperature alarm point set at 100°C.

(c) Surge tank temperature TICA-622.01 should read 120°C.

e. Charging the No. 4 still and start-up:

(1) Set valves in transfer line from No. 2 blow tank to the still.

HDO 86

PROTECTED MATERIAL: MONSANTO INSURANCE COVERAGE LITIGATION

IF THE FILM IMAGE IS LESS CLEAR THAN THIS NOTICE, IT IS DUE THE QUALITY OF THE ORIGINAL DOCUMENT.

(2) Start the blowing tank pump and transfer a full charge into the still tank.

(3) The still furnace coil can be preheated by using the pushbutton on the still control panel. This will allow bypassing the furnace interlocks to start gas into the furnace without starting the still pump. The pilot and main gas burner will be started as usual.

This is to prevent plugging the still coil during start-up.

Place gas flow controller FEC-618.06 in "manual" with the output pressure at 3-1/2 psig. Observe the furnace stack temperature on the multipoint recorder and do not exceed 200°C.

(4) Note the level of material leaving the No. 2 blow tank (Item 541) on the level indication gauge. As soon as 15% of the material has been transferred to the still, start the still circulating pump (Item 616).

(5) Set valves in the No. 4 still circulating line through the heater coil (Item 618) and back into the still tank.

(6) Stop the No. 2 blow tank transfer pump when the charge is complete as noted on the No. 2 blow tank level gauge. Allow lines to drain and then close the charging lines to the still.

(7) Close the valve under the No. 2 blow tank.

(8) Add hydrated lime through the funnel provided for this purpose on the No. 4 still. Add 100 pounds of lime for each still batch.

HDO 86

PROTECTED MATERIAL: MONSANTO INSURANCE COVERAGE LITIGATION

(9) Close the valve on the lime addition line.

(10) Set No. 4 still condenser condensate temperature alarm TIA-619.03 at 100°C.

(11) Start up the No. 4 still furnace (Item 618).

f. Furnace Start-Up for the First Time:

(1) Open manual valves in the natural gas line to the furnace main and pilot gas lines.

(2) Open damper on the furnace stack.

(3) Turn on circuit No. 6 at the still panel and the switch on the outside of the field control box to "on". The "red" light at the Honeywell Protectoglo unit will light up.

(4) Push pretemp "start" button to allow pre-heating the furnace before starting the circulating pump.

(5) Set the control point on the Honeywell coil outlet temperature indicator located in the box at 400°C.

(6) Gas test the atmosphere inside the heater. Use a 3 foot length of copper tubing on the end of a rubber hose. If the test shows dangerous, stop and correct the cause of trouble before lighting the burner. When the heater is cold, there is no natural draft to carry away gas or fumes. After the unit gets hot, there will always be a natural draft provided the flue damper is open.

IF THE FILM IMAGE IS LESS CLEAR THAN THIS NOTICE, IT IS DUE THE QUALITY OF THE ORIGINAL DOCUMENT.

HDO 86

Comments on data contained in Tables 1 thru 21.

Fish analyzed by the Rome Pollution Laboratory in the initial sampling (July 25 thru September 5, 1975) were weighed and measured by the Laboratory and, in most instances, by the Regional personnel who captured the fish.

The lengths and weights reported on the attached data sheets are those obtained by the Rome Pollution Laboratory and converted to decimal form. This procedure was used so as to obtain consistency in reporting of these measurements. The lengths and weights reported on the data sheets do not necessarily correspond with those obtained and reported by the Regional personnel collecting the fish samples. This is due to shrinkage of the fish as a result of freezing prior to analysis. The length and weight information on fish analyzed by the Departments of Health and Agriculture and Markets are the data reported by the Regions collecting the fish samples and converted to decimal form where appropriate.

Lengths and weights reported on the data sheets for the second sampling of fish (September 16-18, 1975) are those obtained by the regional personnel and converted to decimal form, where appropriate.

PROTECTED MATERIAL: MONSANTO INSURANCE COVERAGE LITIGATION

IF THE FILM IMAGE IS LESS CLEAR THAN THIS NOTICE, IT IS DUE THE QUALITY OF THE ORIGINAL DOCUMENT.

(7) Actuate the red reset lever inside the Honeywell Protectoglo unit in the field control box. Open the door of the flame unit. This exposes the small red lever in the lower right-hand corner of the case. You must wait 10 seconds between settings of this lever in case it has to be redone.

(8) The "green" light on the Protectoglo unit should come on within 6 minutes.

(9) Depress the ignition start button on the side of the field control box to actuate the pilot flame. Hold the button depressed for no more than 10 seconds. If all is well, the "white" light on the Protectoglo unit will come on and the "green" light will go out. When this occurs, pull your finger away. The pilot is now properly lit.

(10) Put the set point on the natural gas flow controller FRC-618.06 to the solid still below 2.5 psig output. The switch will be in "auto".

(11) Manually open the two reset safety valves in the main gas line. The heater is now ready for operation.

(12) Increase gas flow to furnace burner. Observe stack temperature. Do not exceed 150°C.

(13) Start up the solid still circulating pump. The Aroclor circulating flow meter FRA-618.01 will now record a flow above 150 GPM. Low flow below 50 GPM through the coil will cause the main burner to be shut off.

HDO 86

PROTECTED MATERIAL: MONSANTO INSURANCE COVERAGE LITIGATION

(14) Gradually raise the set point of the natural gas flow controller FRC-618.06 to the desired set point.

The furnace refrectory must be dried out prior to starting heat-up to 400°C. Special instructions will be made at start-up. Temperature of the furnace will be controlled by the stack high temperature point on the multipoint recorder.

Observe the coil outlet temperature on the multi-point temperature recorder. Do not exceed 50°C. increase for the first two hours. Raise FRC-618.06 set point for the natural gas flow as required to increase the temperature 50°C. per hour until you reach 400°C. The natural gas flow controller should be in "auto". The distillation or "boiling" is considered to be started when the vapor temperature makes a sudden increase. Watch for this increase during initial heat-up of the furnace for the first time.

(15) Check the following items in the system to be sure operations are normal.

(a) Natural gas flow to the furnace on FRC-618.06.

(b) No. 4 still circulating pump flow FRA-618.01.

(c) Therminol cooling system temperature on TICA-622.01.

(d) Check the coil temperature differential on the inlet and outlet of the furnace (Item 618).

IF THE FILM IMAGE IS LESS CLEAR THAN THIS NOTICE, IT IS DUE THE QUALITY OF THE ORIGINAL DOCUMENT.

HDO 86 1 1 1 1 1 1 1 1

PROTECTED MATERIAL: MONSANTO INSURANCE COVERAGE LITIGATION

IF THE FILM IMAGE IS LESS CLEAR THAN THIS NOTICE, IT IS DUE THE QUALITY OF THE ORIGINAL DOCUMENT.

8. Start-Up of Furnace after Temporary Shutdown

(1) Prior to start-up, the still coil can be pre-heated before starting the circulating pump, if necessary. See Section 8.(3), Page 6.

(2) Adjust natural gas flow controller to "auto" with the set point below 2.5 psig output pressure. This is FRC-618.06.

(3) Start up the solid still circulating pump (Item 616). The Aroclor circulating flow meter FRA-618.01 should now indicate a flow in excess of 150 GPM. Shutdown will occur at a flow below 50 GPM.

(4) Open the main valve in the vacuum line to the vacuum jets above the receiver. Vacuum at the still receiver should be approximately 5 mm Hg. FRC-615.04 should indicate the exact vacuum on the still, which should be 10 mm Hg.

(5) Gradually raise the set point of the natural gas flow controller FRC-618.06 to the desired set point.

(6) Check the multipoint temperature recording instrument for the temperature rise across the coil in the heater furnace. In case this temperature chart is not indicating correctly, check for plugged lines or instrument problems. Check to be sure the pump flow is being measured correctly. If necessary, shut off the pump while at a low temperature to be sure the system is operating. Have the electrician check the temperature instruments if you do not get a rise.

HDO 86

PROTECTED MATERIAL: MONSANTO INSURANCE COVERAGE LITIGATION

IF THE FILM IMAGE IS LESS CLEAR THAN THIS NOTICE, IT IS DUE THE QUALITY OF THE ORIGINAL DOCUMENT.

(7) Adjust the still furnace natural gas feed with FRC-618.06 to give the maximum rate of temperature rise without overheating. A spread of 4 - 6°C. between the coil inlet and outlet is normal. The gas supply pressure will normally be approximately 4-1/2 psig.

(8) Be sure the Therminol heating system is off the vacuum line to the jets during operation.

(9) Check the Therminol cooling system on the No. 4 still condenser (Item 619) to be sure the condenser does not plug up. If plugging begins to occur, raise the temperature in the Therminol cooling circulation system. Use TICA-622.01 to accomplish this. The temperature indicating alarm TIA-619.03 set at 100°C. will indicate plugging of the condenser.

If the system is too hot, the fan on the Therminol cooling system cooler (Item 624) can be started automatically or manually.

(10) Vacuum problems on the stills are usually due to flashing of product over plugged vacuum lines, leaks in the still system, leaks at pump packing, or Therminol flow problems on the condenser, water adjustment on the inter-condenser, on the jet, changes in the steam pressure to the jets, or problems in the nozzles for the jet. Flashing can be stopped by lowering the temperature of the Therminol cooling system for the No. 4 still condenser. Vacuum trouble must be traced systematically from the jet to the receiver and then to the still. To accomplish this, manometer pressure indicators have been placed in the system as follows:

HDO 86

PROTECTED MATERIAL: MONSANTO INSURANCE COVERAGE LITIGATION

(a) On top of the trap in front of the jet (Item 625);

(b) On the still receiver (Item 620);

(c) On the still (Item 615).

(11) During normal operation, the manual valves to the coil on the receiver (Item 620) are open. The still receiver temperature indicating controller TIC-620.02 is set at 150°C. with the controller in "auto".

(12) A level indication gauge has been installed in the still receiver (Item 620) to allow indication of the level of material being distilled over. The level instrument is LI-620.04. This level indication can be used to determine when the distillation is near completion. This will aid the still operator along with his normal observation of coil temperature spread across the furnace.

(13) Batch data sheets are filled out during each distillation. Information includes the still lot number, materials being distilled, start time, finish time, the temperature spread on the still coils, the vacuum, the end time for the distillation, etc. See distillation table details which follow on Page 13.

(14) As the distillation nears completion, temperature in the still pot will rise. Flow through the coil will remain steady. When the flow drops below 125 GPM, an alarm will sound. The main gas burner to the furnace will shut off if flow drops below 50 GPM. An additional aid in the level indicator in the still receiver (Item 620).

IF THE FILM IMAGE IS LESS CLEAR THAN THIS NOTICE, IT IS DUE THE QUALITY OF THE ORIGINAL DOCUMENT.

HDO 86

0545103

PROTECTED MATERIAL: MONSANTO INSURANCE COVERAGE LITIGATION

TABLE II

DISTILLATION OPERATING CONDITIONS - SOLID AROCLORS				
	1268	4465	5442	5460
Approximate Temperatures at which Various Aroclors Start Distilling @ 10 mm Vacuum. At Still:				
Column	225°C.	220°C.	215°C.	260°C.
Coil Inlet	240°C.	235°C.	240°C.	280°C.
Coil Outlet	245°C.	240°C.	245°C.	285°C.
Approximate Finishing Temperature When Bottoms Are Not to be Drawn:				
Column		310°C.		
Coil Inlet		330°C.		
Coil Outlet		375°C.		
Approximate Finishing Temperature After Which Bottoms Are to be Drawn:				
Column	285°C.	350°C.	315°C.	355°C.
Coil Inlet	295°C.	360°C.	340°C.	375°C.
Coil Outlet	330°C.	400°C.	380°C.	400°C.
Finishing Hold Point	150-170°C.			
Finishing Softening Point		60-66°C.	46-52°C.	98-105.5°C.

IF THE FILM IMAGE IS LESS CLEAR THAN THIS NOTICE, IT IS DUE THE QUALITY OF THE ORIGINAL DOCUMENT.

HDO 86

PROTECTED MATERIAL: MONSANTO INSURANCE COVERAGE LITIGATION

IF THE FILM IMAGE IS LESS CLEAR THAN THIS NOTICE, IT IS DUE THE QUALITY OF THE ORIGINAL DOCUMENT.

(15) At the end of the distillation, the batch is checked for color and softening point or hold point, depending on the material being produced. Before transfer, check that space is available in the flaker hold tank and that the hot Therminol system is on the transfer lines from the still receiver to the flaker hold tank.

(16) At the end of the distillation, shut off the furnace if it has not already been shut down automatically.

(17) Close the main valve in the vacuum line on top of the receiver (Item 620). This is to isolate the jet from the still system and eliminate plugging of the jet.

(18) Vent the furnace coil and allow it to suck dry slowly to prevent carryover to the still condenser.

(19) Shut off the fan on the Therminol cooling system cooler (Item 624). This can be done at the control panel.

3. <u>Operation of the Still During Distillation</u>

a. Regulate the gas pressure at the burners by use of FRC-618.06 to give the maximum distillation rate with consistent good color of the product.

b. The lower the vacuum, the faster the distillation rate, normally. (See Table II - "Distillation Operating Conditions - Solid Aroclors" - Page 13)

HDQ 86

PROTECTED MATERIAL: MONSANTO INSURANCE COVERAGE LITIGATION

c. Coil temperature spread:

(1) Coil inlet and outlet temperature must be watched closely at the end of the distillation. Still-bottoms are very viscous; therefore, if the circulating pump is in poor condition, or the distillation is carried too far, circulation may stop and the coil will become plugged or be burned. Heat from the furnace actually burns the Aroclor to carbon when overheated. If the coil outlet temperature jumps suddenly and the inlet temperature stays the same or falls, circulation is nearly stopped. In this case, shut off the furnace gas supply FRC-618.06 quickly and suck the coil. Normally, the low flow rate FRA-618.01 will alarm with a flow below 125 GPM. If the coil cannot be sucked, it is plugged and will have to be replaced.

4. Pump Out Still Receiver

a. Transfer material from the still receiver (Item 620) to the flaker hold tank or drum out, dependent on material being produced.

b. Observe level of material in the still receiver by use of LI-620.04.

c. Check to be sure Therminol heating system is on the jackets of the transfer lines.

d. Set valves in the line to drum out material or transfer to the flaker hold tank.

e. If material is to be transferred to the flaker hold tank, start transfer pump (Item 621) under the receiver. Allow material to pump until the receiver is empty.

f. Close the valves and stop the transfer pump when the receiver is empty. This can be observed by checking level gauge LI-620.04.

g. Start agitator in flaker hold tank.

IF THE FILM IMAGE IS LESS CLEAR THAN THIS NOTICE, IT IS DUE THE QUALITY OF THE ORIGINAL DOCUMENT.

HDO 86

PROTECTED MATERIAL: MONSANTO INSURANCE COVERAGE LITIGATION

B. Start-Up Following Temporary Shutdown

This start-up phase would normally be a situation where a previous distillation is complete and the still has been shut down for charging with a new batch.

1. Prepare No. 2 Blow Tank for Transfer Charge

   a. Check to be sure that the Therminol heating system is on the transfer lines from the blow tank to the still pot.

   b. Check the temperature of the material in the blow tank. It should be 170°C. minimum.

   c. Check with the chlorinator operator to be sure that the crude Aroclor has been air-blown one hour.

   d. The No. 4 still vacuum system should be operating with the valve just above the No. 4 still receiver closed. Water should be on the intercondenser and steam on the jet stages. Vacuum on the trap (Item 625) in the vacuum pipe line should be indicating 4 - 5 mm Hg.

2. Set the vacuum control PRC-615.04 in "auto" with the set point at 10 mm Hg.

3. The No. 4 still receiver temperature still controller TIC-620.02 should be in "auto" with the set point at 150°C.

4. The Therminol cooling system should be circulating through the No. 4 still condenser and back to the surge tank. The temperature controller TICA-622.01 should be in "auto" with the set point at 120°C. The fan for the Therminol cooler (Item 624) should be running, if necessary, to cool Therminol. The No. 4 still temperature control TIC-615.03 will be in "auto" with the set point at 150°C.

IF THE FILM IMAGE IS LESS CLEAR THAN THIS NOTICE, IT IS DUE THE QUALITY OF THE ORIGINAL DOCUMENT.

HDO 86

PROTECTED MATERIAL: MONSANTO INSURANCE COVERAGE LITIGATION

IF THE FILM IMAGE IS LESS CLEAR THAN THIS NOTICE, IT IS DUE THE QUALITY OF THE ORIGINAL DOCUMENT.

5. The natural gas flow controller FRC-618.06 will be in "auto" with the set point below 2.5 psig output pressure.

6. The No. 4 still furnace (Item 618) will be on as indicated by the Honeywell Protectoglo unit in the field panel. The "white" light on the Protectoglo unit will be on.

7. Set valves in the transfer line from the No. 2 blow tank to the No. 4 still.

8. Open the vent valve on the No. 4 still. Close the valve at the bottom of the still.

9. Start the No. 2 blow tank transfer pump and charge the No. 4 still. Observe level indication gauge in the No. 2 blow tank to measure the still charge.

10. Start up the solid still circulating pump. The Aroclor circulating flow meter FRA-618.01 will now record a flow in excess of 150 GPM.

11. The still circulating pump will be started as soon as 15% of the material from the No. 2 blow tank has been charged to the still.

12. Stop the No. 2 blow tank transfer pump as soon as the blow tank is empty. Close the valves at the bottom of the blow tank and at the discharge of the transfer pump.

13. Add 100 lbs. of lime to the still charge.

14. Close the vent valve on the No. 4 still. Open the vacuum valve on the No. 4 still receiver and start the vacuum on the system.

HDO 86

Hudson River PCB Analysis Results
(Analysis by Rome Pollution Laboratory)

Table 1

Species	Date Collected	Date Analysis Reported	Location	Lab. Ident.	Albany Ident.	Tag No.	Length (Inches)	Weight (Pounds)	PPM as Aroclor 1242//016	PPM as Aroclor 1254	Total PCB's	PPM DDT/ DCB	% Oil	Remarks
Smallmouth bass (Micropterus dolomieui)	8/20/75 8/21/75	9/2/75	Above Corinth	5s Hud-Comp 5			9.1 9.2	0.35 0.37	0	Trace	Trace			Composite of 2
				5s Hud Comp 4			11.0 11.4	0.64 0.70	0	Trace	Trace			Composite of 2
				5s Hud Comp 1			11.0 11.0 10.6	0.62 0.66 0.64	0	Trace	Trace			Composite of 3
				5s Hud Comp 3			6.7 7.1 7.3	0.12 0.17 0.17	0	Trace	Trace			Composite of 3
				5s Hud Comp 6			7.5 7.7	0.20 0.22	0	Trace	Trace			Composite of 2
				5s Hud Comp 2			10.0 10.0 10.0 10.6	0.44 0.45 0.48 0.55	0	Trace	Trace			Composite of 4
White sucker (Catostomus commersoni)	8/20/75 8/21/75	9/2/75	Above Corinth	5s Hud 17 5s Hud 18			14.6 18.5	1.47 3.02	0 0	Trace Trace	Trace Trace			
Yellow perch (Perca flavescens)	8/20/75 8/21/75	9/2/75	Above Corinth	5s Hud Comp 7			6.7 6.9 7.1 7.1 7.1	0.16 0.14 0.14 0.15 0.16	0	Trace	Trace			Composite of 5

MONS 043076

PROTECTED MATERIAL: MONSANTO INSURANCE COVERAGE LITIGATION

IF THE FILM IMAGE IS LESS CLEAR THAN THIS NOTICE, IT IS DUE THE QUALITY OF THE ORIGINAL DOCUMENT.

15. Gradually raise the set point of the natural gas flow controller FRC-618.06 to the desired set point. Watch the temperature rise across the furnace coil inlet and outlet as the temperature is raised. Normally, a 4 - 6°C. spread will be obtained across the furnace coil.

16. During normal operation of the still system, the following items will be observed.

    a. Temperature spread across the still furnace.

    b. Flow of the Aroclor through the furnace coil. See FRA-618.01.

    c. Level indication in the No. 4 still receiver. See LI-620.04.

    d. Natural gas flow control to the No. 4 still furnace. See FRC-618.06.

    e. Temperature in the Therminol circulating system. See TICA-622.01.

    f. Temperature control in the No. 4 still. See TIC-615.03.

    g. Temperature control in the No. 4 still receiver. See TIC-620.02.

17. At the end of the distillation the batch is checked for color, softening point or hold point, depending on the material being produced. As the distillation continues, the temperature in the still pot will rise; flow through the coil will remain steady. When the flow drops to 125 GPM, an alarm will sound. Shut-off of the main gas to the still furnace will occur if flow drops below 50 GPM. An additional aid to finishing the batch is the level indication in the No. 4 still receiver LI-620.04.

HDO 86

PROTECTED MATERIAL: MONSANTO INSURANCE COVERAGE LITIGATION

18. Shut off the natural gas if it has not alarmed. Clear the coil by doing the following:

    a. Close the vacuum valve on top of the No. 4 still receiver in the line to the jet.

    b. Vent the still heater coil and suck the coil dry.

    c. Shut off the fan at the Aroclor cooler (Item 624).

19. Set lines to either drum material or transfer to the flaker hold tank, dependent on the material being produced. In case the material is to be transferred to the flaker hold tank, be sure the Therminol heating system is on the pump suction and discharge lines. Set the valves in the transfer line and start transfer pump to the flaker hold tank. When the No. 4 still receiver is empty, stop the circulating pump and close the valves in the transfer lines.

3.2 Routine Operations

When the No. 4 still system is operating normally, the following conditions will exist in the process.

A. No. 4 still pressure control PRC-615.04 set at 10 mm Hg.

B. No. 4 still circulating pump flow recorded on FRA-618.01 with flow above 125 GPM.

C. No. 4 still temperature control TRC-615.03 set at 150°C.

D. Natural gas feed to the still furnace controller FRC-618.06 set to give desired coil outlet temperature (about 900 cfh).

IF THE FILM IMAGE IS LESS CLEAR THAN THIS NOTICE, IT IS DUE THE QUALITY OF THE ORIGINAL DOCUMENT.

HDO 86

PROTECTED MATERIAL: MONSANTO INSURANCE COVERAGE LITIGATION

E. Furnace high temperature alarm instrument set at 400°C.

F. Therminol cooling system circulating temperature controller TICA-622.01 set at 120°C.

G. No. 4 still receiver temperature control TIC-620.02 set at 150°C.

H. No. 4 still level indication gauge LI-620.04 will indicate level in the receiver.

I. Main natural gas pressure 40 psig.

J. Natural gas reduced pressure 2-1/2 to 4 psig.

3.3 Safety Features

A. The Honeywell Protectoglo unit has the following safety features for the No. 4 still furnace (Item 618):

1. Ignition period 10 second delay between actuation periods for the warp switch to cool.

2. Master coil high temperature outlet shutdown set at 400°C.

3. Natural gas high reduced pressure shutdown set at 5.0 psig.

4. Circulating pump low flow rate shutdown alarm set at 125 GPM.

5. Pilot flame must be burning to start pu the unit. This is indicated by 1-1/2 to 2 microamperes on the field control panel.

B. Therminol cooling system temperature control alarm set for low alarm at 100°C. and high alarm at 175°C.

0545111

IF THE FILM IMAGE IS LESS CLEAR THAN THIS NOTICE, IT IS DUE THE QUALITY OF THE ORIGINAL DOCUMENT.

HDO 86

PROTECTED MATERIAL: MONSANTO INSURANCE COVERAGE LITIGATION

C. Check surge tank (Item 622) to be sure Therminol level is at least 6"-12" in sight glass.

3.4 Shutdown

A. Temporary Shutdown

Main gas burner on the furnace off with the pilot light on. The No. 4 still circulating pump running and the vacuum system on.

1. Adjust FRC-618.06. Set point to 0. Instrument in "auto".

2. Close the manual valve in the natural gas feed supply line to the main burner.

3. The vacuum may be cut off by closing the manual valve above the No. 4 still receiver. The still would then be vented and shut down systematically, if necessary.

B. Complete Shutdown

Main gas burner and pilot light shut off in the furnace. Still circulating pump off. The vacuum shut down and the Therminol cooling system shut off.

1. Push ignition stop button on side of the field control panel for the furnace control system.

2. After the furnace has cooled slightly, push the stop button for the No. 4 still circulating pump (Item 616).

3. Close manual valve above the No. 4 still receiver in the vacuum line.

4. Shut off steam to the vacuum jet by closing main valve in the steam supply line.

IF THE FILM IMAGE IS LESS CLEAR THAN THIS NOTICE, IT IS DUE THE QUALITY OF THE ORIGINAL DOCUMENT.

HDO 86

PROTECTED MATERIAL: MONSANTO INSURANCE COVERAGE LITIGATION

5. Close valve in the water line to the inter-condenser on the No. 4 still jet.

6. Shut off Aroclor to the coils on the still tank and the receiver by adjusting the temperature controller set points to 0 for each tank.

7. Stop the Therminol cooling system circulating pump (Item 623).

8. Check the surge tank level to be sure the tank does not overflow after this pump is shut off.

9. Adjust TICA-622.01 controller set point to 0. This will stop the Therminol heating system flow to the coils on the surge tank (Item 622).

10. Stop the fan on the Therminol cooling system cooler (Item 624).

3.5 Control Loops, Interlocks, and Alarms

A. Control Loops

There are 9 major control loops in this system.

1. Vacuum Control for the No. 4 Still - PRC-615.04

The function of this loop is to maintain a constant vacuum on the No. 4 still tank. This is accomplished by measurement of the vacuum on the still and throttling a control valve at the suction of the No. 4 still jet. Normal setting of this instrument is 10 mm Hg.

IF THE FILM IMAGE IS LESS CLEAR THAN THIS NOTICE, IT IS DUE THE QUALITY OF THE ORIGINAL DOCUMENT.

HDO 86

PROTECTED MATERIAL: MONSANTO INSURANCE COVERAGE LITIGATION

IF THE FILM IMAGE IS LESS CLEAR THAN THIS NOTICE, IT IS DUE THE QUALITY OF THE ORIGINAL DOCUMENT.

2. No. 4 Still Circulating Pump Flow Recorder - FRA-618.01

The function of this loop is to measure and record the flow through the furnace heater coil on the No. 4 still. This is accomplished by measurement with a segmental orifice which indicates the flow to a panel recorder with alarm. This is a special flanged jacketed orifice assembly using a Taylor volumetric d/p cell to measure flow. Normal flow will be above 150 GPM. A low flow alarm shutdown for the furnace (Item 618) main gas system will be actuated if the flow drops below 125 GPM. Shutdown occurs if flow drops below 50 GPM.

3. No. 4 Still Temperature Control - TIC-615.03

The function of this loop is to maintain a minimum temperature in the No. 4 still, dependent on the material being produced. This is accomplished by measurement of the temperature and throttling a control valve on the discharge of the Therminol heating system from the coils in the No. 4 still (Item 615).

4. Furnace Natural Gas Flow Control - FRC-618.06

The function of this loop is to control the gas input to the No. 4 still furnace. This is accomplished by measurement of the natural gas through an orifice flow meter and throttling the control valve in the reduced gas line.

5. No. 4 Still Furnace Controls - 618A

The function of this control system is to control the natural gas feed pressure to the still furnace and assure a pilot light is always burning when natural gas is being fed to the furnace. This is accomplished with a Minneapolis-Honeywell Protectoglo pilot light control mechanism. There are six safety features in the furnace controls to shut the system down:

HDO 861