MARSHALL LABORATORY
STANDARD FORMULATING PRACTICE FP-01-B
"48 PROCESS"

DATE OF ISSUE: SUPERSEDING: NEW

I. GENERAL DESCRIPTION

"48 Process" is a specific type of mixer-dispersion process for handling fine partical solid materials in liquid. A mixer designed to apply up to 2 lbs/square inch shear stress at shear rates in the 100-150 sec.$^{-1}$ range on mixtures with a Pigment Volume to Liquid Volume Ratio (P/L) sufficient to appreciably restrict solid particle rotation is utilized. Under these high pigment loading conditions the average clearance between solid particles under flow conditions is less than one-half the Effective Diameter of the solid particle mixture. Mixture flow resistance at the Standard Mixer Design shear rate of 120 sec.$^{-1}$ is equivalent to 1150 Poise viscosity at full power input.

Large-scale "48 Process" dispersion requires the use of Standard "48 Process" Mixers. Some small-scale tub-type paste mixers are in use which provide the necessary shear rate and stress, and processing of "48 Process" mixtures in these units is properly classified as "48 Process." The same formulating principles apply but the specific formulation must usually be altered somewhat to comply with the mixing action provided, and formulas for other than Standard "48 Process" Mixers must state the specific type of mixer to be used.

CAUTION: All information on "48 Process" formulation and equipment is confidential because from the standpoint of patent protection "48 Process" is non-enforcible.

Note: Definitions developed for "48 Process" are delineated in Section II-B of this Formulating Practice. They are generally capitalized and underlined to indicate reference to a specific thing.

II. APPLICATION

"48 Process" dispersive action is limited to breakdown of low and moderate strength agglomerates only, in mixtures composed of; (a) pigments with an average effective particle diameter of 0.2 microns or larger, and (b) a vehicle of low to moderate viscosity (usually below 300 Centipoise) which wets and de-flocculates the pigment to an appreciable degree.

"48 Process" is the most restricted of all the current major dispersion processes with respect to maximum mechanical shear force development. Precise formulation is required to obtain satisfactory dispersive action. It determines the power input during

the dispersion cycle, the shear stress transmitted to the solid particles for any shear stress applied on the overall mixture, and the relative dispersive action on the individual pigments in mixtures containing two or more pigments of substantially different average particle size.

It is possible to develop workable formulations entirely by trial-and-error methods, but the amount of experimental work and time required to determine optimum production-performance formulas makes this method impractical. The formula calculation procedures presented in this Formulating Practice do not eliminate experimental development work but permit paper development of initial formulas which closely approach optimum.

Formulas are calculated directly from product pigment and vehicle composition data. These data, together with the formulation principles and considerations presented, permit selective variation of the dispersive action where two or more pigments of appreciably different particle size are involved.

Data on individual pigment characteristics, required for application of these formulating procedures, are currently being developed by the Philadelphia Process and Methods Group, and the amount of such data included under Exhibit E is necessarily limited. Until such time as more complete data are available, it is suggested that specific formulation problems be referred to this group.

Factors requiring consideration in "48 Process" formulation include the following major items:

A. Dispersion Mechanics
B. Definitions and Nomenclature
C. Pigment Characteristics
D. Dispersion Mixture Characteristics
E. Dispersion Vehicle Composition
F. Dispersion Base Loading Procedure
G. Letdown Problems and Procedures
H. Small Scale Manufacture

A. DISPERSION MECHANICS:

Three basic types of dispersion action are possible and the physical "structure" of the mixture determines the type or types of action developed in a specific mixture.

1. Hydraulic Shear: Hydraulic shear is the primary source of dispersive action in "48 Process." Transmission of shear force from a liquid to a solid body requires viscous shear of the liquid with respect to the surface of the solid.

   Solid particles freely suspended in a liquid undergoing shear will rotate, and the liquid shear rate across the particle surface is only a small fraction of the shear rate in the liquid. Sufficient particle packing to restrict the rotation of the

DUP030001748

particles, through mutual reaction between adjacent particles (opposing rotation), is required to develop appreciable liquid shear across the pigment surface. Interparticle clearances must be less than one-half particle diameter for appreciable rotational restriction.

The dispersion mixture P/L required to obtain such action depends principally upon the packing characteristics of the specific pigment system (See II-C).

2. Direct Mechanical Action: A moderate amount of direct mechanical transmission of shear force, supplementing the hydraulic shear, is obtained in mixtures where the solid particle packing is sufficient to produce positive particle interlocking at the shear rate developed in the dispersion equipment.

The amount of direct mechanical shear force transmission which can be utilized is limited by maximum allowable mixture flow resistance and/or breakdown of the mixture into a discontinuous semi-solid chunks in the shear zone. With relatively high viscosity or poor wetting vehicles, it is not possible to obtain an appreciable degree of mechanical action in "48 Process" because of mixture P/L limitations imposed by such vehicles.

3. Coarser Particle Attrition: The hydraulic force causing relative displacement of adjacent coarser particles can be concentrated on any finer particles caught between them. This type dispersive action is termed coarser particle attrition. The maximum shear stress multiplication which can be developed in this manner depends on the relative size of the coarser and finer particles.

The concentration of substantially coarser particles in single pigments is seldom sufficient to produce such action. Considerations are, therefore, confined to complex pigment systems which are composed of two or more pigments or pigment groups of appreciably different size as measured in terms of a Size Ratio.

A size ratio of 3 or more is required for development of appreciable coarser particle attrition. The average effective clearance between the coarser pigment particles must be at least small enough to produce mechanical bridging through a closely packed finer pigment and liquid mixture. This maximum coarser pigment particle clearance ranges from 10 times the finer pigment Effective Diameter for Size Ratios of 100 or more, down to only 2 times the finer pigment Effective Diameter for Size Ratios of 5 or less.

DUP030001749

Where the finer pigment is not closely packed, the maximum coarser pigment particle clearance must be less than 2 times the finer pigment Effective Diameter for all Size Ratios.

The concentration of the finer pigment in the liquid is also important as it controls both the statistical efficiency of coarser particle attrition and the development of such action on finer pigment particles which are not at least one-tenth diameter of the coarser pigment Effective Diameter. The intermediate size particles escape the coarser particle attrition action unless held in position by close packing of the surrounding finer pigment particles.

The coarser pigment particle clearance, and corresponding finer pigment particle packing, obtainable with complex pigment systems is determined by the Coarser Pigment Volume to Finer Pigment Volume ratio (Pc/Pf), and the packing characteristics of each as numerically evaluated by the Packing Index values.

There are three complex pigment systems to consider in connection with coarser particle attrition, as follows:

(a) Those with Pc/Pf ratios too small to permit development of coarser particle attrition.

(b) Those with Pc/Pf ratios permitting close packing of both the finer and the coarser pigment component, and development of the most effective coarser particle attrition action.

(c) Those with Pc/Pf ratios too large to permit close packing of the finer pigment in the voids of the coarser pigment and efficient application of the coarser particle attrition action developed.

These three complex pigment systems are defined as Excess Finer Pigment Systems, Balanced Pigment Systems, and Excess Coarser Pigment Systems respectively. Overall dispersion characteristics are discussed under II-D.

B. DEFINITIONS AND NOMENCLATURE

1. General

Symbol

P — Pigment Volume in Gallons - can designate the total volume of pigment in any system or, with appropriate supplementary letters, a particular pigment or group of pigments in that system.

DUP030001750

L Liquid Volume in gallons - designates the total liquid volume in any system.

P/L Dimensionless ratio of the volume of the pigment to that of the liquid in any system.

"Dynamically Packed" is defined for purposes of this work as the minimum solid particle packing, at which appreciable mechanical interference between pigment particles can be obtained throughout the mixture when subjected to high shear rates (> 1000 sec. $^{-1}$)

$ Packing Index - the P/L ratio at which the fully dispersed pigment or pigment group, with basic particles unbroken, is dynamically packed.

Note: The packing is controlled by the net combined effect of particle shape and particle size distribution. The $ is obtained experimentally for individual pigments, but is usually calculated for combinations of pigments from data on the individual pigments, due to the large number of possible combinations.

Effective Diameter is the mean random rotational "diameter" of an average particle in microns which for non-spherical particles is approximated by the following equation:

Eff.Dia. = 0.8 length + 0.2 width; where length is the longest dimension and width is the greatest width measured at right angles to the long axis.

Note: This figure is taken as representative of the pigment or pigment group being studied, and is the average on a volume basis.

SR Size Ratio - the dimensionless ratio of the Effective Diameters of a two-pigment combination with the larger value (coarser) divided by the smaller value (finer) computed to the nearest whole number.

Notes: (1) Where this ratio is less than 3, the distinction between the coarser and finer groups is not significant with respect to packing and dispersion behavior, and volumetric weighted average $ values may be used.

(2) By appropriate grouping, several pigments may be considered as comprising the coarser pigment and/or several the finer, using the volumetric weighted average Effective Diameter for each.

DUP030001751

2. Additional For Complex Pigment Systems where SR is 3 or more

Symbol

f — Supplementary Designator refers to the finer of two pigments or pigment groups when used in conjunction with P or ϕ, i.e. Pf or ϕf.

c — Supplementary Designator refers to the coarser of two pigments or pigment groups.

s — Supplementary Designator - refers to the total pigment system under immediate consideration.

Note: Quantities P,L,P/L, or ϕ when written without supplementary designators are assumed to carry the supplementary designator "s".

Pf/L — Analog of the Simple System P/L - indicating the volumetric concentration of the finer pigment in the liquid.

Pc/(Pf+L) — Analog of P/L for the Coarser Pigment alone, indicating the volumetric concentration of the coarser pigment in the finer pigment plus liquid mixture which functions as the "liquid" for the coarser pigment.

Balanced Pigment System* - one in which the system when adjusted to the dynamically packed condition develops its appreciable mechanical interference through joint contribution of the finer and the coarser pigment groupings. Particle interaction between the respective groups occurs over a range of Pc/(Pf + L) for any combination of pigments. This range is particularly broad for lower SR values. Values for Pf/L and Pc/(Pf+L) in the combination system are less than the ϕ values for the finer or coarser pigment or pigment groups when used alone.

Excess Finer Pigment System* - One in which the system when adjusted to the dynamically packed condition develops its appreciable mechanical interference through the finer pigment grouping only.

Excess Coarser Pigment System* - One in which the system when adjusted to the dynamically packed condition develops its appreciable mechanical interference through the coarser pigment grouping only.

(*Types of complex pigment systems can be numerically defined only at a dynamically packed condition, and ϕs values must be calculated by different methods for each.)

DUP030001752

C. PIGMENT CHARACTERISTICS

Two aspects of the pigments under consideration are of major importance in "48 Process" application. These are:

1. Particle Size:

The maximum size of the basic pigment particles or hard agglomerates, relative to product particle size limits, restricts "48 Process" application because such particles are not appreciably reduced.

Dispersion resistance of pigments generally increases as the basic particle size decreases because of the increase in the number of actual contact points per unit cross-sectional area of the agglomerates, and the decrease in the size of the void openings for vehicle penetration.

A minimum basic pigment particle size restriction on "48 Process" application is also encountered in the form of excessive flow resistance at P/L ratios required. The particle packing required for effective rotational restriction is a function of the ratio of particle clearance to particle size, and the permissable particle clearance decreases with particle size. With an effective diameter of 0.2 micron, the actual particle clearance required is on the order of 0.01 micron (100 Angstroms) which is the same order of magnitude as the vehicle layer adsorbed on these fine pigments. High flow resistance at "48 Process" P/L ratios is, therefore, usually encountered in the general vicinity of 0.2 microns basic particle size.

The actual operating limit on minimum basic particle size varies appreciably depending upon the normal agglomerate strength, the vehicle composition and viscosity, the amount of coarser particle attrition obtainable, and the degree of dispersion required in the finished product. Successful "48 Process" dispersion of pigments with a basic particle size below 1.0 micron requires a favorable situation with respect to total restrictions imposed by these four factors.

Note: Fine pigments develop agglomerates of increased strength upon removal of previously absorbed moisture such as occurs during storage under high humidity conditions followed by prolonged storage under lower humidity conditions. This increase is substantial with pigments having a basic average particle diameter on the order of one micron and less.

DUP030001753

2. Pigment Packing

The primary formulation variable is pigment packing. Packing characteristics of individual pigments above 0.2 micron effective diameter vary by more than 10:1 due to differences in particle shape and size distribution. In addition, combination of pigments of different average effective particle size results in packing of the finer in the voids of the coarser, and the actual packing of the combination can exceed the volumetrically weighted average of the individual pigment packing values by as much as 3:1.

The P/L required to obtain efficient dispersive action is proportional to the pigment packing characteristics and, therefore, different for each specific pigment or pigment combination.

Packing Index (Ψ) values provide a numerical rating of relative pigment packing characteristics in liquid under flow conditions, and generalized "48 Process" formula calculation procedures based on (P/L) to Ψ value relationships have been developed (See III-Formulation).

Note: Packing Index values should also be utilized when it is necessary to determine the correct quantity of a substitute pigment. Equal volume substitution can result in marked changes in physical composition of a product. The simple expedient of substituting in volumes proportional to Ψ values of the original and replacement pigment gives reasonable satisfactory results if the Effective Diameters are similar. Where a pigment size change is also involved the same type calculation as used for dispersion mixture should be applied to the overall product, and substitution made on the basis of equal overall pigment system packing in the product.

D. DISPERSION MIXTURE CHARACTERISTICS

The overall level of dispersive action is controlled by the mixture P/Ls ratio, and the applied shear stress. The latter is determined by the mixture flow resistance at "48 Process" mixer operating conditions.

The characteristics which must be considered for prediction and control of dispersive action are the differences in action on different size pigment particles in simple mixtures and on individual pigments in complex mixtures.

DUP030001754

1. Simple Dispersion Mixtures

Simple dispersion mixtures contain only one pigment, or a combination of pigments with a SR less than 3, wherein dispersive action is limited to hydraulic shear alone, or hydraulic shear supplemented by direct mechanical action.

Dispersive action is greatest on agglomerates smaller than the Effective Diameter of the overall pigment system, and least on agglomerates larger than the Effective Diameter of the overall pigment system. Elimination of large agglomerates, therefore, is the most common dispersion problem with this type mixture.

2. Complex Dispersion Mixtures

Complex dispersion mixtures have a Size Ratio of 3 or greater between one pigment or pigment group and a second pigment or pigment group.

Three types exist, as follows:

(a) Excess Finer Pigment Systems: Dispersive action on the finer pigment component is similar to that in a simple mixture of the finer pigment only, and produces very little action on the coarser pigment.

(b) Excess Coarser Pigment Systems: Dispersive action due to interaction between adjacent finer pigment particles is restricted because of limitation on packing. The dispersion efficiency on the finer pigment component decreases with increasing Pc/Pf ratio; ranging moderate to poor.

The overall dispersive action on the finer pigment is similar to "47 Process" in that, while relatively small particles are effectively dispersed, the particles or agglomerates of the finer pigment which are only somewhat smaller than the coarser, pigment particles tend to persist.

The coarser pigment receives a major portion of the dispersive action and at high Pc/Pf ratios is equal to that obtainable in simple mixtures of the coarser pigment component alone.

(c) Balanced Pigment Systems: Dispersive action on the finer pigment is superior to that obtainable in any other type of dispersion mixture having the same Size Ratio because of the efficient coarser particle attrition

DUP030001755

Dispersive action on the coarser pigment varies appreciably; ranging from only slightly better than in an Excess Finer Pigment System to nearly as strong as that in the Excess Coarser Pigment Systems as the Pc/Pf ratio is varied from the lower to the upper end of the Balanced Pigment System range respectively.

3. Variation and Control

Variation of dispersion characteristics with respect to a particular pigment component requires some type of multi-stage operation. The practical number of stages seldom exceeds three and in most cases is two. Multi-stage operation is usually undesirable if satisfactory results can be achieved using single stage operation by proper P/L and/or vehicle composition adjustments.

(a) Simple Dispersion Mixtures: Little can be done to alter the dispersion characteristics of a simple mixture. Where two or more pigments are involved, a small performance improvement may be possible by multi-stage operation if dispersing a more troublesome pigment separately allows the use of a better vehicle composition permitting use of a higher P/L. After completion of the first stage dispersion cycle, the balance of the liquid and then the pigment required to make the composition identical with the best single-stage formula are added and a second dispersion cycle is completed prior to final letdown.

(b) Complex Dispersion Mixtures: Dispersion characteristics are varied by adjusting the finer or coarser pigment concentration to provide a different type of mixture in the first stage of a multi-stage dispersion operation.

In cases of severe restriction on vehicle composition this adjustment, carried to the extreme of using a simple dispersion mixture first stage, may provide the best results if the vehicle composition improvement outweighs the poorer dispersion characteristics of simple mixtures.

Multi-stage operation to shift from an Excess Coarser Pigment System to a Balanced Pigment System for improved finer pigment dispersion is the most frequently employed variation. This variation also provides an operating advantage if the balance of the coarser pigment can be simply stirred in after complete letdown of the first stage dispersion.

DUP030001756

Useful multi-stage variations include; (a) first stage dispersion of a troublesome coarser pigment using an Excess Coarser Pigment System or a simple dispersion mixture of the coarser pigment only; (b) first-stage dispersion of the most troublesome pigment of a finer pigment group in a Balanced Pigment System where the overall composition is actually an Excess Finer Pigment System; and (c) withholding addition of a friable coarser pigment until near the end of the dispersion cycle, or until after letdown for simple stirr-in addition, to limit particle breakdown.

E. DISPERSION VEHICLE COMPOSITION

Vehicle composition per se is of secondary importance with respect to dispersive action but the high P/L requirement for efficient operation makes vehicle viscosity and pigment deflocculating action of primary importance. Practically any type of vehicle system can be used if the viscosity and pigment deflocculating requirements can be met.

Vehicle viscosity must be restricted in order to produce high P/L dispersion mixtures with reasonable flow resistance. The shear of the mixture must be absorbed by the liquid layers between the pigment particles which are very thin. The actual liquid shear rate ranges from 100 to 10,000 times the overall mixture shear rate as the P/L is increased over the P/L range of practical "48 Process" dispersion mixtures. Since viscous flow resistance is the product of shear rate times viscosity, the true viscous flow resistance of the mixture will also range from 100 to 10,000 times the vehicle viscosity as a direct function of vehicle viscosity and P/L.

Mixture flow resistance due to pigment flocculation resulting from either active pigment particle surface forces or adsorbed layers of incompatible liquid, is also a direct function of particle packing and is, therefore, pronounced in the high P/L "48 Process" dispersion mixtures. Flocculation structure is normally continuous in such closely packed pigment systems, and the principle effect is development of a definite mechanical strength which can be measured (normal unit is dynes/sq.cm.). This mechanical strength or "Yield Value" is not multiplied by shear rate, and its flow resistance component can be considered to represent a fixed load.

The limit on the combined effect of vehicle viscosity and yield value is established by the applied shear stress of 2 lbs/sq. inch at "48 Process" mixer full rated load which is equivalent to 138,000 dynes/sq. cm. Assuming a 20,000 dyne/sq. cm. yield value and a mid-range liquid shear rate multiplication factor of 1,000 at full power input for illustration purposes, the following are representative values of the process parameters:

DUP030001757

TOTAL FLOW RESISTANCE = 138,000 dynes/sq.cm.

YIELD VALUE FLOW RESISTANCE = 20,000 dynes/sq.cm.

NET VISCOUS FLOW RESISTANCE = (138,000 - 20,000) dynes/sq.cm.

MIXTURE SHEAR RATE = 120 sec.$^{-1}$

ACTUAL LIQUID SHEAR RATE = 120 sec.$^{-1}$ x 1,000

VEHICLE VISCOSITY = $\frac{138,000 - 20,000 \text{ dynes/sq.cm.}}{120 \text{ sec.}^{-1} \times 1.000}$

= 0.983 Poise

Examination of these relationships will show that the upper limit on vehicle viscosity is on the order of 1 Poise. Also, considerable yield value can be tolerated since the limit on vehicle viscosity is reduced only about 7% for each 10,000 dynes/sq.cm. yield value. The actual yield value is of concern only if it is sufficient to prevent adequate flow and circulation in the mixer.

The vehicle components that provide effective pigment deflocculating action in most finishes vehicle systems are the polymeric materials which also produce high viscosity when used in high concentrations. Therefore, the best dispersion vehicle composition is determined experimentally for maximum operating P/L, and is usually a compromise with respect to pigment defloculation and low vehicle viscosity. Approximate compositions are given in III-D.

F. DISPERSION MIXTURE LOADING PROCEDURE

The volume of product which can be manufactured using a given size "48 Process" mixer depends upon volume of the actual dispersion mixture. This should be between 25% and 70% of the mixer operating capacity.

Addition order and procedure requires consideration.

1. Liquid Addition

All the liquid components required for the dispersion mixture are normally loaded first, and premixed. This minimizes the problem of surface-sealed agglomerates which can result from the addition of dry pigment to high viscosity liquid. The loading of all required liquid initially also permits the highest overall pigment addition rate.

Where the exact dispersion mixture P/L ratio is being determined, as in initial formula development or production-scale alignment work, a small fraction of the required liquid is withheld and added near the end of the pigment addition as necessary to adjust the power requirement. The composition of the liquid added at this point must be selected in conformance with the limitations on letdown vehicle solids content to prevent "kickout" (See II-G).

DUP030001758

2. Pigment Addition

The effective volume of a dry pigment is several times that of the true pigment volume because of air trapped in the voids, irregularity of agglomerate shape, and non-uniform initial distribution of pigment particles. (reduced inter-particle packing). Dispersion of agglomerated pigments usually begins at a relatively low P/L, but if no further pigment is loaded the drop in effective pigment volume will stop the dispersion at some partially complete condition.

Rapid addition of the total volume of pigment necessary to produce adequate dispersive action when only a little of the pigment remains dispersed, would freeze the mixture.

Progressive pigment loading is therefore necessary. The rate is controlled on the basis of mixer power. Pigment is added as rapidly as it will mix in until full rated mixer power is reached. From this point on, pigment is added as dispersion proceeds, utilizing a 20% permissible temporary overload allowance for pigment addition if necessary.

The input power will level off within 20 to 30 minutes after the last pigment addition, and at this point it should not exceed full rated mixer power. Maximum operating P/L ratios are determined by the latter limit (See III Formulation).

Pigment loading order is arranged to provide maximum dispersive action during pigment loading and, thereby, obtain the fastest possible overall pigment loading rate. With simple mixtures, (SR<3), pigment loading order is usually unimportant. With complex mixtures, addition of a suitable portion of an easily-dispersed coarser pigment or pigment group, followed by the finer pigments and finally the balance of this coarser pigment, will usually result in the best dispersive action during pigment loading. (See Exhibit A Item C).

Where serious difficulty with floating of a coarser extender pigment is encountered, it may be more advantageous to load all such extender first. Care must be used in the application of this procedure as the finer pigment supplements the liquid in filling voids of the coarser, and when the finer pigment is withheld the volume of liquid required may be greater than is required for the overall dispersion mixture. The latter situation necessitates addition of part of the finer pigment together with the coarser pigment in order to subsequently produce the required final dispersion mixture composition.

Large dry pigment lumps may be formed if large volumes of dry pigment are caused to submerge in highly pigmented mixtures. The heavy consistency and lack of appreciable free liquid results in the formation of a thick, cohesive surface coating. The air sealed in such lumps causes them to float in the dense dispersion mixtures and manual breakdown is usually necessary. Rapid dumping of pigment is the primary cause of lump formation either through immediate submersion or build-up of a large floating mass which is then sucked under by the agitator action.

DUP030001759

Pigment can be added rapidly as long as the mixture is fully liquid but after the mixture begins to exhibit a paste-like consistency addition should be regulated to provide a slow, steady flow onto the surface of the mixture. The greater the mixture surface area contacted, the faster the mix-in during the latter stages of pigment loading.

The normal mixing time required to complete dispersion is 30 minutes after the last pigment addition is mixed in. Where slow wear-off of agglomerates is necessary, two to three times this cycle may prove advantageous but a dispersion cycle longer than two hours seldom has any beneficial effect.

3. Laboratory versus Production Mixer Loading

Loading order, procedure, pigment addition time, and cycles are approximately the same for all units.

G. LETDOWN PROBLEMS AND PROCEDURE

Two types of letdown failure must be avoided to achieve satisfactory dispersion in the finished product; (a) simple dilution failure due to excessive yield value of the pigmented mixture being reduced, and (b) "kickout" by local shrinkage of the pigmented mixture at the interface produced during addition of a letdown vehicle with substantially higher solids than the solids of the vehicle of the pigmented mixture (solvent migrates due to osmotic pressure differential at the interface). The latter problem imposes restrictions on vehicle solids differential which may, in turn, impose restrictions on dispersion vehicle composition.

The problem of high yield value is almost always encountered in the letdown of "48 Process" dispersion mixtures due to the high P/L requirements for dispersion. Slow controlled letdown in the "48 Process" mixer is required.

The flow resistance of a high P/L dispersion base is sharply reduced by the first small increase in liquid content, and progressively less by each succeeding unit of added liquid. Since sufficient shear stress to forcibly distribute added liquid through the pigment system must be maintained, letdown is also controlled on the basis of mixer power.

Standard letdown rate is restricted to that required to reduce mixer power by no more than 1.25% of full load per minute. This control method automatically provides a very slow initial addition rate, and a progressive increase in addition rate as the yield value is reduced. When the yield value is sufficiently reduced (approximately 600 dynes/sq.cm. or less), the balance of the reduction can be completed in the "48 Process" mixer or in a standard finished product mixer as desired.

The standard letdown rate is purposely conservative but the progressively increasing liquid addition rates, if utilized, permit letdown of most dispersion bases in 30 to 60 minutes. The small saving in time possible by increasing this rate is not worth the risk of ruining a batch.

DUP030001760

H. SMALL SCALE MANUFACTURE

Evaluation and adjustment of "48 Process" formulas involves the use of several different size mixing units. Rough checking is done in a Pint Can Unit and final laboratory scale development in the One Gallon Can Unit (See Exhibits F & G).

A five-gallon unit has been designed, and was used in early development work but its principle value at present is for manufacture of small quantities of product or special bases for test purposes, and design is not included.

Pilot-plant alignment is required as an intermediate scale-up step unless considerable experience has been gained on the particular type of formulation and there is no question of the ability of plant scale equipment to give satisfactory results. A 150-gallon experimental unit has been design and is in operation at the Philadelphia Process and Methods Group Pilot Plant.

Complete simulation of production size "48 Process" mixer performance is not possible as the difference in gravity-head, affecting circulation, cannot be adequately compensated in the small equipment.

Removal of any semi-wet pigment accumulations on either the agitator or upper side wall during and after pigment loading is required operating procedure for laboratory units.

The primary dispersion controlling parameters which must be simulated in any small scale unit are; (a) shear rate (600 to 800 ft/minute per inch of clearanch measured between the blade crest and mixer wall), and (b) applied shear stress (2 lbs/sq. inch average full rated load shear stress on the mixture between the blade and the wall, taking the projected blade area as equal to the effective cross sectional shear area).

The convex vertical blade surface incorporated in all but the Pint Can Unit agitator blade is required for positive pressure contact with the material in the shear zone between the blade and the tank wall when operating with thixotropic or dilatent dispersion mixtures. The bottom pump-blade section design, wall clearance and operating speed of the agitator must be balanced to obtain adequate positive circulation at a slow controlled rate.

Operation of a properly designed small scale unit is the same as required for the plant scale units. Normal operating temperature (150°F standard operating limit) is roughly the same but should be closely controlled if solution or chemical reaction of some ingredient is involved. Due to the low efficiency of small scale electric drives, the power input must be measured by a torque table (See Exhibit G).

DUP030001761

The only difference in mixer action normally encountered in scale-up is that increased unit size usually permits use of slightly higher P/L mixtures. Where increased P/L would be desirable, a small amount of the laboratory formula dispersion base vehicle (roughly 5%) is withheld for possible upward P/L adjustment within power limits when scaling-up to production units.

The larger gravity head in the large unit also permits satisfactory operation with greater amounts of flocculation structure ("false body") than can be readily handled in the small laboratory units. Laboratory experimental formulas should not be revised to reduce flocculation more than necessary for practical operation if dispersion performance must be sacrificed in so doing. The best dispersion mixture for production units normally produces reasonably satisfactory flow in laboratory units.

III. FORMULATION

The general procedure for calculating and experimentally refining "48 Process" formulas encompasses the entire range of practical variations. Formula calculations are based on volumetric relationships and are illustrated on the example given as Exhibit A of this Practice.

Each general formulating consideration is presented individually. The order of discussion is as close as possible to that most desirable in formula development but a substantial inter-relationship exists which makes it necessary to develop a working knowledge of each element for effective application.

A. VOLUMETRIC COMPOSITION ANALYSIS

Breakdown of the overall product composition and determination of the volume of each pigment and vehicle component is the first step. Analysis is facilitated by grouping vehicle components and pigments by type. Where the product involved is not a prime base used in several products, it is advisable to start with the overall product composition to reduce formulation restrictions.

The method and tabulation procedure are detailed in Exhibit A, Part A.

B. CALCULATION OF PIGMENT SYSTEM PACKING CHARACTERISTICS

Individual pigment packing characteristics are determined experimentally by methods beyond the scope of this practice. Development of individual pigment Packing Index (Ψ) and particle size data are underway, and currently available data are tabulated in Exhibit E.

DUP030001762

Formulas usually contain more than one pigment, and this necessitates the determination of the Packing Index of the overall pigment system (ϕs), and various portions thereof (ϕf and ϕc). Because of the many possible combinations, the Packing Index of pigment combinations is normally calculated from the individual pigment Packing Index (ϕ) values, the Size Ratio, and the relative volumes of each.

Pigment combinations with Size Ratios less than 3 do not provide a significant amount of inter-particle packing, and the Packing Index (ϕs) value used is the volumetrically weighted average of the individual pigment ϕ values.

Pigment combinations with Size Ratios of 3 or more are complex pigment systems in which the interparticle packing behavior differs in each of the three functional types.

Formulas are given in Exhibit D for Excess Coarser Pigment Systems in which the finer pigment replaces liquid in the voids of the coarser pigment, and for Excess Finer Pigment Systems in which the finer pigment functions partially as liquid in surrounding the coarser pigment particles (the extent of such action depends upon the Size Ratio).

Exhibit C is the "Packing Index Calculation Nomograph" for Balanced Pigment Systems. The interaction between finer and coarser pigment particles in Balanced Pigment Systems results in lower packing than would be calculated using the formulas for either of the other type types of complex systems.

Unless the particular pigment combinatinn is obviously an Excess Coarser Pigment System or an Excess Finer Pigment System, the Packing Index and Mid-range Pc/Pf for the pigment combination as a Balanced Pigment System should be calculated first from the nomograph. Comparison of the calculated Pc/Pf ratio with the actual Pc/Pf ratio then reduces further calculation to only one of the two possible alternate types for determination of the correct Packing Index value (See Exhibit A, Item B.).

It should be noted that the Pc/Pf ratio range comprising Balanced Pigment Systems depends on individual pigment ϕ values and Size Ratio. The mid-range Pc/Pf value is automatically determined by entering the Nomograph with these three quantities. Actual Pc/Pf ratios are not used until alternate type pigment system formulas are employed to determine Pc/Pf range limits.

C. OVERALL DISPERSION MIXTURE P/L

The variations in dispersion characteristics of pigment systems with changes in the physical composition of the pigment system are discussed in II-A, II-B, II-D, and III-C. With the pigment system fixed, the overall dispersion mixture P/L becomes the primary consideration.

The general formulation objective for maximum dispersive action (See II-A) on a specific pigment system is stated as follows:

DUP030001763

MAXIMUM P/L AT FULL RATED MIXER POWER INPUT

Overall dispersion mixture P/L requirements vary widely but are proportional to the Packing Index of the specific pigment system ($\mathbb{P}s$) which is the numerical value of the overall P/L ratio required to produce a Dynamically Packed mixture of that pigment in a liquid when the pigment is fully dispersed.

With vehicle composition adjusted for equal mixture flow resistance, nearly equivalent dispersion behavior is obtained when the P/L relationship in two different pigmented systems (a) and (b), is as follows:

$$\frac{(P/L)a}{(\mathbb{P}s)_a} = \frac{(P/L)b}{(\mathbb{P}s)_b}$$

Pigment packing in any liquid admixture can be independently defined in terms of the percent of the Dynamically Packed condition ($P/L = \mathbb{P}s$), calculated as follows:

$$\text{Packing Percentage} = \frac{(P/L)\text{ actual} \times 100}{\mathbb{P}s} = \%\ \mathbb{P}s$$

Appreciable restriction of particle rotation is not obtained at Packing Percentages below 50% and considerable higher packing is necessary for efficient operation.

At mixture shear rates in the 1000 sec.$^{-1}$ and over range, maximum operating P/L would be $P/L = \mathbb{P}s$. At mixture shear rates substantially lower than the 1000 sec.$^{-1}$ considerable departure from straight-line particle displacement occurs. This departure increasing with decreasing shear rate and vehicle viscosity.

At the 120 sec.$^{-1}$ shear rate in "48 Process" Units, considerable departure is possible. There are, in the absence of serious limitations on vehicle composition (See II-E and III-D), dispersion mixture P/L values should be in the Normal Range:

Normal Range: $P/L = 1.0\ \mathbb{P}s$ to $1.2\ \mathbb{P}s$

Total "48 Process" Range: $P/L = 0.5\ \mathbb{P}s$ to $1.3\ \mathbb{P}s$

Good dispersion usually can be obtained with dispersion mixture P/L ratios ranging from $0.8\ \mathbb{P}s$ to $1.0\ \mathbb{P}s$ if carefully formulated to take advantage of all favorable factors.

Aqueous vehicle dispersion mixture of some pigments such as TiO_2 can be sufficiently dispersed for use in most flat emulsion finishes at P/L ratios as low as $0.5\ \mathbb{P}s$.

If dispersion can be obtained at P/L ratios below $0.5\ \mathbb{P}s$, "48 Process" is not required and the simple mixing operation should not be classified as "48 Process."

DUP030001764

Overall P/L requirements for optimum operating and dispersion performance with a specific pigment and vehicle system are usually quite narrow despite the wide variation between different mixtures, and the final operating P/L should be determined to within ± 0.03.

Small quantities of extremely fine pigments such as of previously dispersed Carbon Black or Iron Blue, or gel-type materials such as Aluminum Stearate, are treated as part of the liquid phase for dispersion mixture P/L calculations, where used in mixtures containing relatively large quantities of pigments in the 0.2 micron diameter and larger size range.

D. DISPERSION MIXTURE VEHICLE COMPOSITION

Best vehicle composition, within the product limits, is determined by actual dispersion and post-dispersion mixture performance. Inter-related general considerations are as follows:

(1) Pigment Wetting:

Wetting involves both displacement of previously adsorbed gases and/or liquid from the pigment surface and formation of a thermally stable adsorbed protective layer controlling flocculation. Low molecular weight liquid can accomplish the former, but the medium-to-high polymer vehicle components of ordinary finishes vehicles systems are generally required to accomplish the latter. The amount of such polymer required is related to the nature and area of pigment surface.

Higher polymers are generally more effective, and combinations as such with solvent and/or other high-solvent content vehicle components such as driers is usually preferable to greater amounts of lower molecular weight polymeric materials.

The normal range of "48 Process" dispersion vehicle composition is:

VEHICLE POLYMER SOLIDS CONTENT: 10% to 30% BY WEIGHT

(bodied oil, resin, or equivalent material)

Very strong wetting agents may drop the wetting agent requirement to the 5% level. With normal systems, dispersion vehicle compositions outside the above range will be on the high side because of product restrictions or letdown requirements.

(2) Dispersion Mixture Viscosity:

Pigment particle size and packing characteristics, pigment flocculation, and percentage packing required to achieve satisfactory dispersion, all tend to limit the maximum usable vehicle viscosity.

DUP030001765

The normal vehicle viscosity range for most formulation, when measured at the operating temperature of the "48 Process" dispersion mixture, is as follows:

DISPERSION VEHICLE VISCOSITY RANGE: 0.05 to 0.5 Poise

Note: Dispersion mixtures containing all or nearly all coarse and/or low-packing pigment (low ϕs) may require higher viscosity vehicle to permit utilization of full mixer power but the maximum seldom exceeds 2.0 poises (150°F)

(3) Letdown Requirements:

Additional restrictions on vehicle composition may be imposed by letdown requirements as discussed above.

(4) Post-dispersion Base or Product Stability:

Stability problems with "48 Process" manufactured products which are satisfactory with respect to pigment dispersion, are generally confined to moderate changes in body characteristics affecting flow, leveling, gloss, etc.

The tendency for surface-active vehicle components to shift toward some type of equilibrium distribution has been observed. The results of such shifts in distribution may be restricted to a consistency change with age and can be compensated by modifying initial viscosity, or may be sufficient to affect settling stability and/or film properties and necessitate formulation changes.

Most of these difficulties can usually be avoided by maintaining a reasonable balance between the amounts of vehicle components with relatively high wetting or flocculating action in the dispersion mixture vehicle versus that in the letdown vehicle. Inclusion of the entire amount of such vehicle components in the dispersion mixture or in the letdown may be advantageous for dispersinn but products so made must be carefully watched for change in fluid and film characteristics on aging.

Particular attention should be given to the addition procedure for vehicle components which markedly increase product body and they should be added during the final stages of letdown. Under these conditions, such materials may tend to react logically upon addition and procedures must be carefully checked to insure uniform distribution under production mixing conditions.

DUP030001766

Manufacture of intermediate pigmented bases for later use introduces the further problem of final composition requirements for storage stability which may impose restrictions on dispersion vehicle composition. The high pigmentation of "48 Process" dispersion mixtures, however, usually permits adequate vehicle composition adjustment during letdown.

Special vehicle formulation problems are being encountered with increasing frequency because of the current trend toward new types of vehicle systems. While this has little effect on the general requirements for vehicle formulation, "48 Process" provides some possible advantages as follows:

(1) Emulsion Type Vehicles:

Emulsion type vehicles which would be coagulated due to water loss during milling on open dispersion equipment, such as Roll Mills, can be used if necessary. Experience, to date, indicates no damage to the emulsion system. Special attention to mixer cleanup, however, is necessary if the emulsion constitutes a substantial portion of the vehicle.

The high pigment concentration in "48 Process" dispersion mixtures frequently permits a more advantageous solution to the problem: pigment dispersion and partial letdown using a water plus wetting agent vehicle system, followed by transfer to an ordinary mixer where the emulsion vehicle component is added.

(2) Solution Type Vehicles

Vehicle systems wherein part of the vehicle solids must be dissolved often can be manufactured in the "48 Process" mixer during the dispersion operation if satisfactory solution of the solid material can be obtained at temperatures of 150°F, or less. This eliminates separate intermediate manufacture, and may also aid in actual solution due to high-shear mixing conditions and mechanical separation of dissolving particles.

Dry-blending of pigment and the dry undissolved vehicle solids component in the "48 Process" mixer, prior to addition of the solvent, is sometimes possible.

CAUTION: The mixer must be stopped and sufficient liquid for a moderately fluid final mixture added before re-starting or mixer power will be excessive and the mixture will be converted to a dense dispersion resistant mass.

DUP030001767

E. DISPERSION MIXTURE LETDOWN

The general "48 Process" problem of uniform dilution of the high yield value mixtures was discussed above and an approximate general yield value limit on reduced dispersion base for transfer to, and further letdown in, ordinary finished product mixers was given as 600 dynes/sq. cm.

Another useful method for determining the required amount of dispersion base letdown consists of a simple spot test. A puddle of the next liquid to be added is placed on a glass plate, several drops of the pigmented mixture are immersed in this liquid puddle, and the puddle is then stirred rapidly with a rod or edge of a spatula to avoid any mulling action. If complete dispersion cannot be obtained by this method, further reduction under "48 Process" letdown conditions is required before transfer.

Kickout, due to localized dispersion mixture shrinkage can also be detected by the above test because if such action is occuring the resistance to dispersion by stirring will increase markedly when stirring is delayed for a short period (30 seconds to 2 minutes depending on the severity.)

All letdown vehicles which are close to the limit on vehicle solids differential (See next paragraph) should be tested by the above method to avoid damaging satisfactory dispersions and prevent erroneous conclusions as to dispersion performance.

Localized dispersion base shrinkage is the most serious type of letdown failure because the agglomerates formed are frequently as strong or stronger than the original pigment agglomerates. Such "kickout" of "48 Process" is usually confined to dispersion mixtures having vehicle compositions below 50% by weight vehicle solids. For letdown of such mixtures, the vehicle solids differential must be generally held below the following limit:

$$\frac{\text{LETDOWN VEHICLE SOLIDS}}{\text{DISPERSION BASE VEHICLE SOLIDS}} = \frac{2 \text{ Maximum}}{1}$$

It may be necessary to modify the dispersion base vehicle if the required limits on vehicle solids differential cannot be accomplished by variation of the letdown vehicle addition procedure.

Damage may be confined to a fine structure variation which requires careful microscopic examination for detection but still involve a sufficient portion of the pigment system to have a major effect on product properties such as settling, gloss, tinting strength, etc.

DUP030001768

Formulas which are borderline for letdown behavior can be extremely troublesome as slight ingredient or manufacturing procedure variations make the difference between good and bad product; this possibility should be checked first when plant and laboratory product differs for no obvious reason.

Laboratory mixing conditions must be carefully controlled during letdown so as not to exceed plant equipment mix-in rate or shear stress development to avoid formulas requiring processing conditions not reproducable in plant equipment.

Where a potential letdown difficulty cannot be completely eliminated, the formula should so state and specify manufacturing procedures to minimize the difficulty, such as slow addition with agitation to effect immediate distribution. Production areas should be consulted to see if the proposed special treatment is feasible and make the choice between any alternatives.

F. SINGLE-STAGE VERSUS MULTI-STAGE DISPERSION

Single-stage dispersion operation is preferable from an operating standpoint, but product composition restrictions on dispersion formulation, and/or the necessity for varying the dispersive action on a particular pigment fraction in a complex mixture, may make consideration of multi-stage operation necessary. The specific multi-stage modification used depends on the specific problem and the choice is made on the basis of the considerations outlined under II-D.

(1) Application of Alternatives

Both the single-stage and the potentially best type multi-stage dispersion formulations are calculated when a multi-stage alternative appears to be advantageous. Only two-stage alternatives which providing a change in type of dispersion mixture are considered in initial evaluation work.

The selection of single-stage or two-stage dispersion operation as the basis for further formula development depends upon initial experimental evaluation. Unless the two-stage dispersion technique provides a marked advantage, or appreciable advantage without much increase in operating problems, the single-stage dispersion should be used.

The formulation requirements of each stage of a two-stage dispersion operation are independent of previous or subsequent dispersion operations. Formulas are calculated in the same manner as for a single-stage dispersion for the entire group of pigments to be included. The formulation for the final dispersion stage, therefore, is usually the same as that for the single-stage.

DUP030001769

G. EXPERIMENTAL EVALUATIONS OF FORMULATIONS

Preliminary test batches are most conveniently made in the Pint Can Units but final development should be done in the Gallon Can Unit (See Exhibits F and G). Operating problems are resolved at this level and detailed operating procedures are developed prior to manufacture of pilot plant or production alignment batches.

1. DISPERSION EXPERIMENTATION & VALUATION

(a) Tests

All control and evaluation tests applicable to the particular finished product are employed in the final stages of formula development but these alone are insufficient for adjustment of "48 Process" formulations.

Fineness gauge readings are useful only as a production control test when well correlated for a specific product. Such readings indicate only the size of the coarsest particle fraction with a variation on the order of 25%, depending upon the flow characteristics and pigmentation of the product.

Source, structure and strength of the coarsest particle size fraction and any smaller agglomerates must be known to evaluate completeness of dispersion and determine what type of formulation change, if any, is required to improve and/or control the dispersive action. Thus, microscopic examination must be employed as the primary method of dispersion evaluation.

A detailed discussion of microscopy is beyond the scope of this Formulating Practice. A number of tests on microscopy have been published but the suggested initial reference is Industrial Rheology and Rheological Structures by H. Green, J. Wiley & Sons, 1949.

(b) Sampling

A very small amount of dispersion mixture is removed at intervals during the dispersion cycle, and reduced in the dispersion mixture vehicle, or other proven suitable vehicle, by mixing on a glass slide. If any rubbing action is necessary to effect reduction, it should be held to a minimum to avoid further pigment dispersion.

Note: Suitability of the letdown procedure is determined by comparison of the final sample with the wet standard of the material.

Sampling can usually be limited to the finished material during the final stages of formula development and adjustment.

DUP030001770

(c) Sample Treatment:

Freshly prepared wet-film slides are generally used for microscopic evaluation of dispersion as the material can be manipulated with a probe or between glass slides for differentiation between small agglomerates and flocculates, or determination of strength and structure of large particles.

A series of wedge-shape liquid films, easily produced on a slide with a spatula, is recommended. Considerable dilution may be ultimately required for examination of the finest particles present but initial samples should be at as high a concentration as practical (approximately 1:1 volume reduction of dispersion mixtures, or finished product) for microscopic observation of overall particle size distribution and arrangement. Dilution of wet films under the microscope assists in identification of letdown problems.

Dry films of undiluted finished product are used for study film surface characteristics, porosity, solvent swelling, etc., where differences in dry film properties must be resolved.

(d) Illumination

A 100 Watt focused lamp with iris diaphram is a minimum practical light source. An Abbe N.A. 1.25 substage condenser also with iris diaphram is suggested for obtaining adequate transmitted light intensity, and variability. A blue filter in the substage condenser provides a desirable color correction for most purposes. Low incidence-angle surface lighting is used for observation of surface characteristics and color of particles and films.

(e) Particle Size Measurement

A calibrated eyepiece reticle is the most convenient method for approximate particle size measurement.

(f) Coarse and Oversize Particles

Identification of coarse particles is based primarily on appearance with transmitted light, and mechanical properties. Reflected light is used to check color.

Most extenders consist of clear crystalline particles with irregular shape and relatively sharp well defined edges.

Gel particles also appear quite clear with little, if any, color, somewhat irregular shape, rounded edges, and little resistance to crushing (distortion under pressure).

Undispersed agglomerates of all but the coarsest extender pigments are nearly opaque (air in voids). Color under reflected light, crushing behavior and resistance, and basic particle size determined by crushing are important characteristics for identification purposes.

DUP030001771

Small chunks of unreduced dispersion mixture and particles formed by dispersion mixture "kickout" during letdown are both appreciably translucent but less so than the surrounding material under high-intensity transmitted light (liquid in voids). Crushing resistance differentiates between these two types as "kickout" produces particles which are appreciably stronger than the original dispersion mixture. Both types contain particles of all the pigments present at the time of formation and this composition characteristic is helpful in determining the origin.

All types of "skins" have irregular shape and usually exhibit an elastic behavior under probe pressure. Oil or resin skins usually appear colored unless very thin; the amount of color varies widely depending upon the color of the original constituents and the formation conditions. Pigmented skins usually have a different upper and lower surface appearance, and the amount and type of pigment contained helps to identify the source.

Individual pigment dispersion may be required to separate coarse dispersion-resistant particles from the softer agglomerates. Some fine pigments contain coarse crystalline particles with an adherent coating of fine particles and appear to be fine particle agglomerates until the outer layer is removed during dispersion.

Where dispersion resistant agglomerates are a problem, different pigment lots should be checked to determine whether hard agglomerates are a general problem or confined to the specific lots of pigment being used.

Most low to moderate strength oversize agglomerates which can be dispersed satisfactorily by "48 Process" will crush into a soft pulp mass rather than breaking sharply into a few well defined fragments when subjected to probe pressure.

(f) Overall Dispersion

In addition to the coarser particle evaluation, the amount and size of finer pigment agglomerates smaller than the coarsest extender crystal or agglomerate fraction must be checked to evaluate overall degree of dispersion.

Insufficiently dispersed fine pigments not only affects such properties as gloss and hiding but have a major influence on product settling stability. Fine pigment agglomerates in general have been found to be more prone to settle than coarser extender crystals. In addition, the undispersed fine pigment in such agglomerates cannot contribute the proper amount to the flocculation structure providing the settling resistance.

DUP030001772

The particle size of pigments too fine to be checked for agglomerates by direct observation is compared with basic pigment particle size to determine if the bulk of the fine pigment is fully dispersed or only reduced to small agglomerates. The basic particle size of many fine pigments is below the resolution limit of ordinary optical microscopes, but small agglomerates usually can be resolved, and dispersion can be evaluated reasonably well on this basis. Intensity of apparent background color with transmitted light is also an indication of the amount of pigment particles appreciably below the resolution limit and this is helpful in comparing fine pigment dispersions.

2. FLOCCULATION STRUCTURE

Flocculation structure affects both settling behavior and film properties. For a given top particle size and density, a definite minimum yield value of the surrounding material is necessary to prevent settling. Flocculation structure and its behavior under shear affect film application properties, gloss, and packing behavior of the pigment in the film; the latter markedly affects mechanical strength of the dry films, and the volume of vehicle solids required to eliminate porosity. The pigment volume concentration (PVC) at which film porosity begins is termed "Critical PVC" in the trade. The "Critical PVC" for fully-dispersed and weakly-flocculated products is approximately the PVC of a "dynamically packed" pigment and liquid system (P/L = ∞) but drops with increased flocculation to approximately 75% of this value for finishes products with maximum flocculation for practical application.

(a) Measurement Tests

The single-point determination of apparent viscosity currently used for control testing is of little value for determination of flow properties. Yield values and data on shear rate versus shear stress (viscosity curves) are required. It is desirable to have this data in absolute units such as is obtained with a Green Interchemical Viscometer.

A useful approximate comparison of relative yield value can be obtained with a Stormer Viscometer (Krebs Paddle) by operating with a series of weight loadings to give paddle speeds ranging from approximately 0.5 to 3.0 rev./sec. Paddle revolutions per second are plotted as the shear rate factor versus grams load as the shear stress factor, and the curve is extrapolated to zero shear rate to obtain relative yield value in grams load. Reference lines for Newtonion liquids in the same general apparent viscosity range are required to determineif the flow behavior is thixotropic, plastic, or dilatent, because of the input energy and results in a non-linear displacement of the viscosity curve.

DUP030001773

(n) Interpolation

Interpolation of viscosity curves is beyond the scope of this formulating practice. A knowlege of the relationship between structure in crowded particle systems and measurable flow characteristics is frequently helpful in identifying the cause of finished product differences. The suggested references are again Industrial Rheology and Rheological Structures, H. Green, John Wiley & Son, 1949, plus Colloidal Dispersions, E. K. Fischer, John Wiley & Son, 1950.

Caution must be used in interpretation of yield value data. Coarse irregular extender particles (i.e. Talcs, Diatomaceous Earth, etc.) when present in appreciable amounts tend to re-enforce the flocculation structure. This increases the overall yield value without producing a like increase in actual pigment suspending action (dependent on the flocculation structure of the surrounding finer pigment and liquid system, which, unfortunately, cannot be measured directly.)

Products containing the above type extenders exhibit marked changes in yield value with small changes in either the amount of the extender or its packing characteristics. Basic pigment particle breakdown by "48 Process" is limited to that on thin needle-shaped crystals. Where such particles are present, dispersion mixtures formulated to produce such breakdown will often produce an apparent increase in fineness as measured on a fineness gauge without a significant reduction in overall extender particle size.

Breakdown of a needle-shaped extender crystal fraction can also produce a significant reduction in flocculation structure re-enforcing action and thereby decrease apparent viscosity. Use of the normal "thin to specified viscosity" specification on manufacturing formulas in such cases can result in substantial solvent content differences and greater actual batch-to-batch product variation than would wider viscosity limits and restricted thinning. Careful selection and specification of viscosity adjustment procedure, formulation for controlled action on the extender, and tighter control on extender pigment characteristics are corrective measures to be considered.

Microscopic study of flocculation structure is of assistance in determining the cause of flow behavior differences. Repeated breakdown and reformation of flocculation structure can be produced by stirring with a probe or squeezing between gloss slides. Flocculation behavior of individual pigment components in the particular vehicle system or fraction thereof can be examined. The action of highly surface active vehicle components can be studied by addition to systems while under microscopic observation.

DUP030001774

Variation of product flow properties with age indicates either a chemical reaction, a change in solution-state of vehicle component, or a change in distribution of one or more surface active vehicle components. The rate of change with time together with information on the type of change (yield value, basic flow resistance, or both) is of assistance in determining the cause.

H. FINAL FORMULA DEVELOPMENT

Initial formula evaluation identifies the type and magnitude of the problems. Efforts to eliminate problems should be divided into three consecutive general steps; resolution of dispersion problems, resolution of finished product property problems, and resolution of operating problems.

1. DISPERSION

Oversize pigment crystals or hard agglomerates will necessitate reformulation and repeat of initial formulation steps with an improved grade of the same pigment or an alternate.

Other dispersion deficiencies require appropriate adjustment of factors controlling dispersive action or letdown behavior as discussed above. Formula adjustments which progressively bracket and divide mixture composition ranges, rather than covering the range by progressive incremental changes, are suggested for quickest evaluation of different types of modifications.

2. FINISHED PRODUCT PROPERTIES

Differences in finished product properties obtained by "48 Process" manufacture versus an alternate dispersion process should be investigated first for change with age during the first few days to ascertain the permanent or temporary nature of differences. If temporary, dispersion and letdown vehicle composition and/or addition procedures modifications are indicated to control distribution. If permanent, dispersion should be carefully re-checked for differences in degree and uniformity of flocculation (test vehicle modifications), and for differences in particle size with particle attention to extremely fine pigment particle components and the condition of highly irregular coarse particles. The methods of altering dispersion are covered earlier.

It may not be possible to exactly reproduce the dispersion state obtained by other processes but differences can frequently be compensated by adjusting relative pigment component volumes and/or finished product P/L, to change the flow behavior and/or the pigment system "structure" in the dry films.

DUP030001775

3. OPERATING PROBLEMS

Plant scale operating problems should be examined and the final aligned formula should specify the simplest possible operating formula with respect to ingredient addition problems. Order of addition should be as simple as possible and arranged to provide the best operating cycle.

Where product composition and dispersion requirements allow, the formula should be adjusted to permit processing at somewhat below full rated power input to the mixer, provided such operation does not jeopardize dispersion performance (See Exhibit A Item D).

Ingredients must appear on the formula in the exact order of addition and be accompanied by detailed instructions covering dispersion cycle and all other problems and restrictions not otherwise covered by standard "48 Process" operating procedures (See Exhibits B and H).

DUP030001776

EXHIBIT A

FORMULA ANALYSIS AND CALCULATIONS

A. OVERALL VOLUMETRIC COMPOSITION ANALYSIS

Example: P-301-U-65555 (301-870, Silver Wing Gray House Paint)

Code	Lbs.	Gal./Lb.	Gal.Pig.	Gal.Liq'd.	Veh.Solids (Wt.%)	Veh.Solids (Lbs.)
H-253	383	0.1300	-	49.79	100%	383.0
VO-5359	25	0.1294	-	3.24	83%	20.7
VD-5087	30	0.1200	-	3.60	42%	12.6
VD-5089	3	0.1383	-	0.41	27.5%	0.1
VM-7790	15	0.1342	-	2.01	50%	7.5
H-287	16	0.1358	-	2.17	-	-
Tot.Liq'd.	472	-		61.22	(89.8%)	423.9
W-50	152	0.0287	4.36	-	-	-
W-65	283	0.0212	6.00	-	-	-
W-90	600	0.0446	26.76	-	-	-
Tot.Pig.	1035	-	37.12	-	-	-
501-205	4		0.05	0.42		
501-616	9		0.22	0.42		
Tot.Shade Base	13					
Total:	1520					

Summary Data (Excluding Shading Bases)

Overall P/L = $\frac{\text{Vol.Pig.}}{\text{Vol.Liq'd.}} = \frac{37.12}{61.22} = 0.63$

Overall Veh.Visc.: Below 50 Centipoise

Notes:

1-Only the volumetric ratios are utilized for formula calculation and, therefore, any total formula weight may be used. Gram weight formulas may be used with gallons/lb. figures without conversion by assuming for calculation purposes that the weight units are pounds.

2-Standard Formula Data such as Theoretical Gallon Weight, Weight % Vehicle Solids, and Pigment/Binder ratios by either weight or volume can be computed directly from the above data.

3-Experimental formula development work is facilitated by using the same tabulation system except for the last two columns which are replaced by columns for P/L and Remarks wherein a tabulation can be made of P/L changes during manufacture together with procedure or mixing behavior notations during experimental formula evaluation such as power requirement, flow, etc.

DUP030001777

B. PIGMENT SYSTEM CALCULATIONS

1. INDIVIDUAL PIGMENT DATA (Experimental Data from Exhibit E)

Code	Name	S	Eff. Dia. (Microns)	Size Range (Microns)	Notes
W-50	TiO_2	2.71	0.4	2 to BRL	
W-65	ZnO	4.70	2	6 to BRL	
W-90	$CaCO_3$	2.42	10	100 to BRL	Controls product fineness approx. 4 mil #2 gauge.

2. SIZE RATIO CALCULATIONS

(a) Size Ratio W-90 and W-65 Combination

$$SR = \frac{\text{Eff. Dia. W-65}}{\text{Eff. Dia. W-50}} = \frac{2.0}{0.4} = \frac{5}{}$$

(b) Size Ratio W-90 versus W-65 plus W-50 combination

Avg. Eff. Dia. of W-50 + W-65 combination

Code	Formula Gallons	Eff. Dia.	Gal. x Eff. Dia.	Avg. Eff. Diameter
W-50	4.36	0.4	1.744	-
W-65	6.00	2.0	12.000	-
	10.36		13.744	1.3

$$SR = \frac{\text{Eff. Dia. W-90}}{\text{Avg. Eff. Dia. W-65+W-50}} = \frac{10}{1.3} = \frac{7.7}{}$$

3. REQUIREMENTS FOR PACKING INDEX CALCULATION

(a) Both SR values are greater than 3.0 and the overall pigment system is a finer complex system within a coarser complex system.

(b) Calculation of the Packing Index will require two-step calculation; first for the W-65 and W-50 combination treating W-65 as the coarser and W-50 as the finer pigment, and second, for the total system treating W-90 as the coarser and the W-65 plus W-50 as the finer pigment using the above calculated Avg. Eff. Dia. as the Eff. Dia. of the finer pigment, and the calculated ϕ_s for W-65 plus W-50 as the ϕ_f value. Since finer pigment supplements the liquid in the coarser pigment voids, multiple complex systems are always calculated calculated progressively beginning with the finest pair.

(c) Calculations can be limited to only two of the three possible complex pigment system types (See XXI-B) by calculating requirements for a Balanced Pigment System first.

DUP030001778

4. W-50 PLUS W-65 COMBINATION

(a) Balanced System Requirements (Actual pigment Volumes are not used; see notes on Nomograph, Exhibit G)

	Code	$\bar{P}$	
Finer Pigment	W-50	0.71 = $\bar{P}f$	SR = 5 (from Item B-2 above)
Coarser Pigment	W-65	0.70 = $\bar{P}c$	

From Nomograph (follow blue dotted lines)

*Pf/L = 0.37 (entering nomograph at $\bar{P}f$ = 0.71)

*Pc/(Pf + L) = 0.36 (entering nomograph at $\bar{P}c$ = 0.70)

*Tot P/L = $\frac{(Pc + Pf)}{L}$ calculated from above ratios by assuming one gallon liquid as basis:

L = 1.0 Gal.: then Pf = 0.37 x L = 0.37 Gal.

Pf + L = 0.37 + 1.0 = 1.37 Gal.

Pc = 0.36 (Pf + L) = 0.36 x 1.37

= 0.49 Gal.

$\bar{P}s$ = *Total P/L = $\frac{(Pc + Pf)}{L} = \frac{(0.49 + 0.37)}{1.0} = \underline{0.86}$

Mid Range Pc/Pf ratio = $\frac{0.49}{0.37} = \underline{1.3}$

(*Values from Nomograph are for W-50 plus W-65 combination at Pc/Pf ratios in the Balanced System range with the pigment system Dynamically Packed and Total P/L = $\bar{P}s$)

(b) Actual W-50 plus W-65 Pigment System Type

Actual Formula Pc/Pf = $\frac{\text{W-65 Vol.}}{\text{W-50 Vol.}} = \frac{6.00 \text{ Gal.}}{4.36 \text{ Gal.}} = \underline{1.4}$

Mid Range Pc/Pf for Balanced System (Item B-4a) = 1.3

Alternate System Check

Possible Type: Excess Coarser Pigment (Formula Exhibit D)
Liquid Vol. (if system is Dynamically Packed Excess Coarser type)

$L = \frac{Pc}{\bar{P}c} - Pc = \frac{6.00}{0.70} - 4.36 = 4.21$ Gal.

DUP030001779

$$\text{Resulting } Pf/L = \frac{4.36}{4.21} = \underline{1.03}$$

$$\text{Max. } Pf/L = \text{Mf}\left(1 - \frac{1.4}{\frac{3}{7}SR}\right) = 0.71\left(1 - \frac{1.4}{\frac{3}{5}}\right)$$

$$= \underline{0.13 \text{ Max.}}$$

*Actual System Type: Balanced Pigment System
(Resulting Pf/L exceeds Max. Pf/L)

(*Volume of W-50 too great for voids of W-65; the low Max. Pf/L value is due to low SR. If Resulting Pf/L is equal or less than Max. Pf/L, the Ms would be that calculated by the formula for Excess Coarser Pigment Systems).

Ms of W-50 plus W-65 combination = 0.86 (as calculated in Item B-4a)

5. W-90 AND THE W-65 PLUS W-50 COMBINATION

(a) Balanced System Requirements

	CODE	M
Finer Pig.	(W-50 + W-65)	0.86 = Mf
Coarser Pig.	W-90	1.42 = Mc

SR = 7.7 (from Item B-2 above)

From Nomograph (follow red dotted lines)

*Pf/L = 0.52 (entering Nomograph at Mf = 0.86)
*Pc/(Pf + L) = 0.86 (entering Nomograph at Mc = 1.42)

*Tot. $P/L = \frac{(Pc+Pf)}{L}$ using L = 1.0 Gal. as basis;

L = 1.0 Gal. then Pf = 0.52 x L = 0.52

Pf + L = 0.52 + 1.0 = 1.52 Gal.

Pc = 0.86 (Pf+L) = 0.86 x 1.52 Gal.
= 1.31 Gal.

$$\text{Ms} = \text{*Tot. } P/L = \frac{(Pc + Pf)}{L} = \frac{(1.31 + 0.52)}{1.0} = \underline{1.83}$$

$$\text{Mid Range } Pc/Pf = \frac{1.31}{0.52} = 2.52$$

(*Values from Nomograph are for W-90 and the W-50 plus W-65 combination. See Note under Item B-4a.)

DUP030001780

(b) Actual W-90 + W-65 + W-50 Pigment System Type

Actual Formula Pc/Pf = $\frac{\text{W-90 Vol.}}{\text{(W-65 + W-50) Vol.}} = \frac{26.76 \text{ Gal.}}{10.36 \text{ Gal.}}$

= 2.58

Mid-Range Pc/Pf for Bal. Pig. Systems (From Item 5a) = 2.52

*Actual Pig. System Type: Balanced System

(*If substantial difference between the two above Pc/Pf ratios is obtained, checking method shown under B-4b must be used to determine type and correct Ps).

Ps = 1.83 as determined under B-5a for Balanced Pig. System

6. SUMMARY OF FORMULA PIGMENT SYSTEM

(a) Overall System:

Type: Balanced Pigment System (Item B-5b)

Ps = 1.83 (Item B-5a)
SR = 7.7 (Item b-2a)

(b) Finer Pigment Systems:

Type: Balanced Pigment System (Item B-4b)

Ps = 0.86 (Item B-4a)
SR = 5 (Item B-2a)

C. INITIAL FORMULA CALCULATION

1. DISPERSION PROCEDURE

(a) Initial Formulation: Single-stage (system unusually well balanced throughout)

(b) Alternate Formulation: None Initially (See D Formula Evaluation and Adjustment)

2. DISPERSION MIXTURE VOLUMES

(a) Operating P/L Selection

Normal Range Dispersion Mixture P/L: P/L = 1.0 Ps to 1.2 Ps
Overall Pigment System Ps = 1.83 (From Item B-6)

Selected Operating P/L: 1.0 Ps*

*(Lower P/L value used because vehicle system has little free solvent available for viscosity adjustment, and usually good dispersive action should be obtained with this excellently balanced system.)

DUP030001781

(b) Liquid Volume Required

Dispersion Mixture P/L = 1.0 $\bar{p}s$ = 1.0 x 1.83 = 1.83

Total Pig. Volume = 37.12 Gal. (Item A) = Ps

$$\text{Liquid Volume} = \frac{Ps}{\bar{p}s} = \frac{37.12}{1.83} = \underline{\underline{20.2 \text{ Gal.}}}$$

3. DISPERSION VEHICLE COMPOSITION (Using all possible high solvent items)

CODE	LBS.	GAL./LB.	GAL.	NOTES
VD-5087	30	0.1200	3.60	(1)-Available quantities and volume data from Item A.
VD-5089	3	0.1383	0.41	
*VM-7790	15	0.1342	2.01	(2)-Volume adjustment with H-253 to get desired final volume.
**VO-5359	5	0.1294	6.47	
H-253	58	0.1300	7.54	
	111		20.03 Gal.	

$$\% \text{ Oil Solids by Wt.} = \frac{58 + (5 \times 0.83)}{111} \times 100 = 56\%$$

(*Sufficient VM-7790 present for flocculating action but incorporated here for vehicle viscosity reduction effect. Finished product will require checking for body shift with age.)

(**VO-5359 is the best pigment wetting agent but also is high viscosity and, therefore, only a limited quantity is used to supplement H-253 wetting action.)

4. PIGMENT ADDITION ORDER

CODE	LBS.	GAL./LB.	GAL.	NOTES
W-90	317	0.0446	14.14	W-90 add split for greatest dispersive action during loading.
W-65	283	0.0212	6.00	
W-50	152	0.0287	4.36	
W-90	283	0.0446	12.62	

5. LETDOWN VEHICLE COMPOSITION AND ADDITION

Oil Solids in dispersion Vehicle = 56% by weight
Vehicle Solids Content Limitation: Max. difference allowable (See Formulation III-E) cannot be exceeded with 56% Oil Solid in dispersive vehicle

CODE	LBS.	GAL./LB.	GAL.	NOTES
VO-5359	20	0.1297	2.59	(1)-Add in order using standard letdown rate (See III-E)
H-253	325	0.1300	42.25	
501-205	4			(2)-Shade
501-616	9			
H-287	16	0.1358	2.17	(3)-Adjust viscosity

D. EVALUATION AND FORMULA ADJUSTMENT (Experimental batches manufactured)

1. INITIAL FORMULA EVALUATION RESULTS (See III-G and III-H)

Dispersion Base P/L: 1.8 P/L achieved; dispersion excellent
Adjustment of P/L : 1.42 P/L evaluated and used in final formula as dispersion was satisfactory and manufacturing difficulty was reduced.

Letdown: No difficulties; no change other than the shift of part of H-253 to dispersion mixture for above P/L adjustment.

Viscosity Stability: Finished product OK - no formula changes.

2. ALTERNATE TWO-STAGE EVALUATION (See III-F)

Required: None

Possibilities: (a)-No dispersion improvement could be obtained over that of dual Balanced Pigment System use.

(b)-If coarser pigment were not W-90 but a more dispersion resistant extender which caused difficulty, improvement might be obtained by a two-stage dispersion with only extender, or Excess Coarser Pigment System, first stage.

(c)-If White pigment float problem were encountered, it would be due to high dispersive action on fines, and either a further reduction of overall P/L should be used, or a moderate decrease in extender concentration employed in a first-stage dispersion plus reduced P/L in the final stage of a two-stage dispersion operation.

DUP030001783

(PAGE #38) 3—TESTING INFORMATION FP-01-B-38 2/18/55 (EXHIBIT B)

SEE TEST MEMO. NO. 16

PROPERTY	TM	LIMITS
☐ BAKING	341	
DRYING TIME	219A	
☐ DUST FREE		
☐ TACK FREE		
☐ HARD DRY		
☐ FILM PROPERTIES	310A	=STD.
☐ SOLIDS	221	
☐ GLOSS MEASUREMENT	204	@ ANGLE @ MILS.
☒ Fineness	52	#2 Gauge 3.5 - 4.0 Mils.
☒ Sag	311B	7-10 n.m.

OTHER SPECIFICATIONS

X Check fineness after letdown

CUSTOMER

SIMILAR TO . INVEST. NO.

REFER TO

FORMULATOR

NOTE BOOK # PAGE #

STANDARDS { FROM BATCH ☐ BEING SUPPLIED ☐

SERIAL NUMBER CHECKED AND ADJUSTED IN OTHER DULUX LINES { YES ☐ NO ☐

RELEASE LETTER #

RELEASE THIS FORMULA YES ☐ NO ☐

FOR ILLUSTRATION OF "48 PROCESS" FORMULATING PRACTICE ONLY.

APPLICATION	APPLY OVER	TEST FOR	REDUCTION BY VOL.
☐ BRUSH TM-339			100 PTS. WITH ____ PTS. ____
☐ FLOW TM-343			100 " " ____ " ____
☐ SPRAY TM-349			100 " " ____ " ____
			100 " " ____ " ____

☐ PRODUCT DESIGNED FOR

FORMULATING SUPERVISOR INITIAL HERE

FORMULA CLERK INITIAL HERE

TEMPORARY FORMULA

CODE P-301-U-65555 DATE

NAME House Paint Silver Wing Gray

REMARKS Trade Sales

CODES		POUNDS	
VD-5087		30	
VD-5089		3	I
VM-7790		15	
VO-5359		5	
H-253		104	
W-90		317	
W-65		283	II
W-50		152	
W-90		283	
VO-5359		20	
H-253		279	III
501-205		4	
501-616		9	
H-287		16	
		1520	

REASON FOR ISSUE "48 Process" Formula

SUPERSEDING FORMULA DATED

FF8668-B

GAL. WT. 15.20 BODY Stormer 88 ± 2

MILL "48 P." FLASH RANGE +150 L COLOR Gray

QUALITY STD. P-301-U-65555 COLOR STD. 301-870 Phila.

1—MANUFACTURING DIRECTIONS

This formula contains Zinc
Check fineness after letdown
3.5 to 4.0 mil. #2 gauge
Std. "48 Process" Operation Procedure
Keep Cooling Water off until temp. of 150°F is reached. Continuous agitation.

I. Add and mix until uniform, keep running.

II. Add in order watch power limits Mix 1/2 hr. after last pigment add.

III. Add oils in order at rate providing power reduction not exceeding 1 amp per 2 minutes. Shade and adjust viscosity with H-287. Cool batch for filling

#2 - Misc. Information

END USE: 1707-2

PAT. MARKINGS: None

CONTROL LAB. O.K. TO ISSUE PERM.

FORMULATOR'S O.K. TO ISSUE PERM.

PLANT

DUP030001784

CONFIDENTIAL

EXHIBIT C
PACKING INDEX CALCULATION NOMOGRAPH

FP-01-B-39
2/18/55

BALANCED PIGMENT SYSTEMS
$\bar{P}s$ VALUES FOR TWO PIGMENT MATERIALS AT MID-RANGE Pc/Pf

Required Data: $\bar{P}c$ $\bar{P}f$ and SR (Pc/Pf automatically determined)
Method:
1. Select operating line for SR ratio.
2. Enter graph at $\bar{P}f$ - Intersection with operating line gives Pf/L
3. Enter graph at $\bar{P}c$ - Intersection with operating line gives Pc/(Pf + L)
4. Solve above Pf/L and Pc/(Pf + L) for Pc and Pf using L = 1.0 gallon
5. $\bar{P}s = \frac{Pc + Pf}{L}$; Mid-range pigment volume ratio = Pc/Pf

Application Range: Mid-Range $\bar{P}s$ values apply over entire balanced system range, as determined by maximum limits on Pf/L for Excess Coarse Systems and on Pc/(Pf + L) for Excess Fine System. Mid-range Pc/Pf versus formula Pc/Pf indicates which alternate system must be checked for limits.

Accuracy: Values determined only to nearest 0.01 unit. $\bar{P}s$ error approximately ± 5% for each single pigment in final combination.

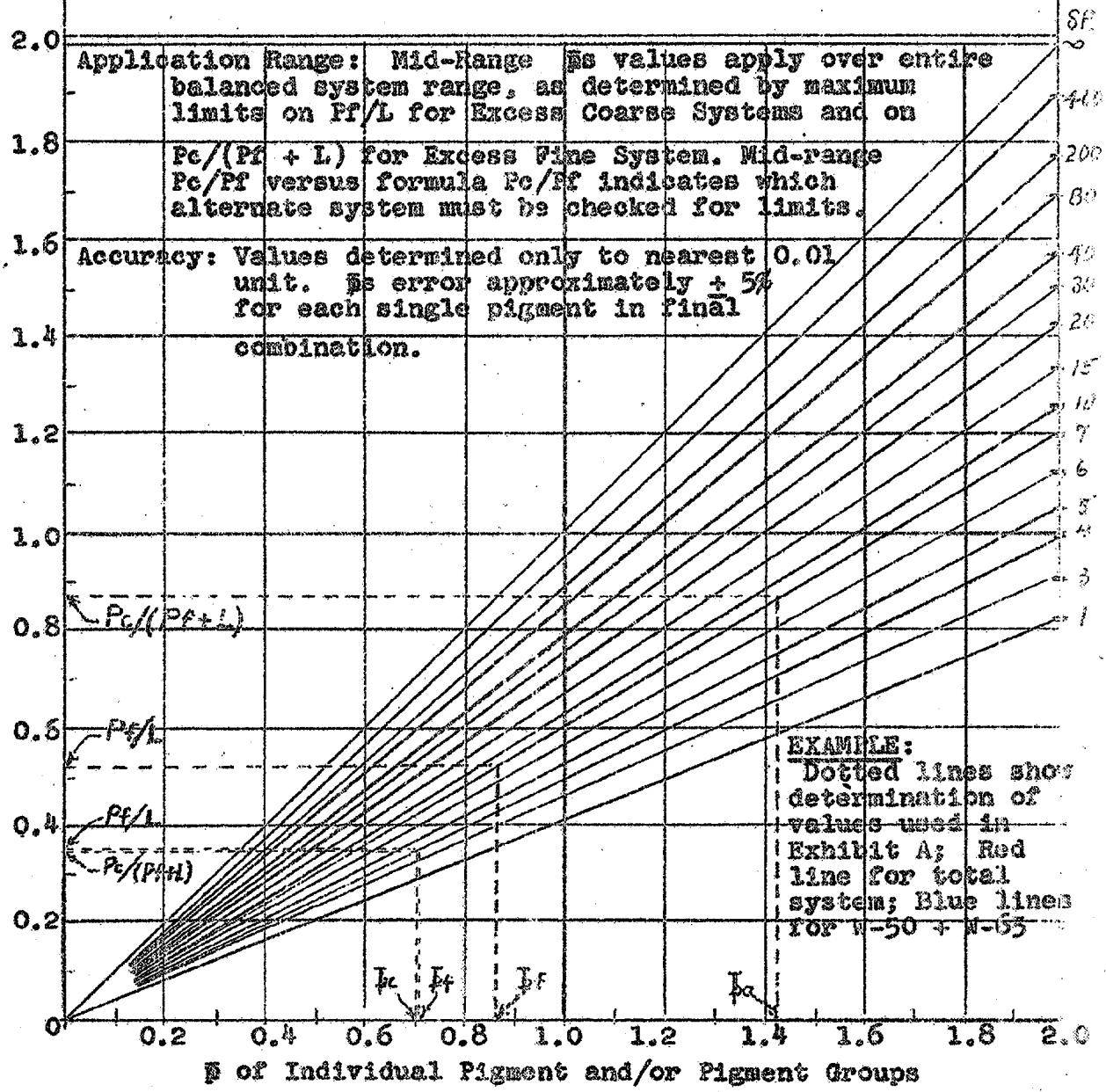

$\bar{P}$ of Individual Pigment and/or Pigment Groups

DUP030001785

EXHIBIT D
PACKING INDEX CALCULATIONS FOR UNBALANCED COMBINATIONS OF PIGMENTS IN LIQUID
(Actual formula pigment quantities used in formulas)

1. Excess Coarse Particle Systems

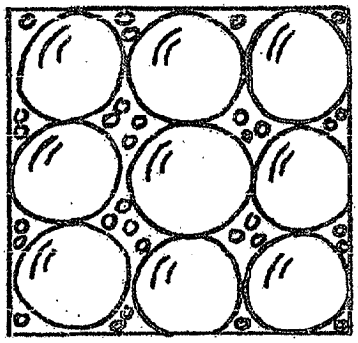
Idealized Schematic

Basic Requirement: $Pc/(Pf + L) = \rho c$

Liquid Content for Dynamically Packed System

$$L \text{ at } \rho s = \frac{Pc}{\rho c} - Pf$$

Maximum Pf/L for formula application*

$$\frac{Pf}{L} = \rho f \left(1 - \frac{1.4}{\sqrt[3]{SR}}\right)$$

*Further increase in Pf results in Balanced System and greater liquid requirement. L value used is that calculated in preceding formula.

$\rho s = \frac{(Pc + Pf)}{L}$ if $\frac{Pf}{L}$ does not exceed maximum.

2. Excess Fine Particle Systems

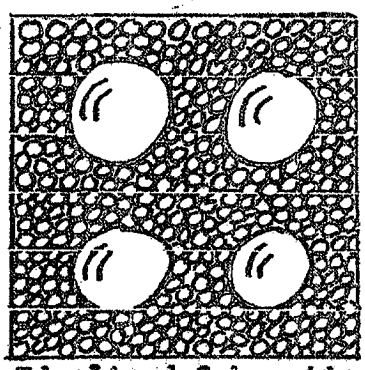
Idealized Schematic

Basic Requirement: $Pc/(Pf + L)$ substantially less than ρc for limited interaction between coarse particles.

Liquid Content for Dynamically Packed System

$$L \text{ at } \rho s = \frac{Pf}{\rho f} + \frac{Pc}{\rho c \sqrt[2]{SR}}$$

Maximum $Pc/(Pf + L)$ for formula application*

$$\frac{Pc}{Pf + L} = \rho c \left(0.9 - \frac{1.4}{\sqrt[2]{SR}}\right)$$

*Further increase on Pc results in Balanced System. L value used is that calculated in preceding formula.

$\rho s = \frac{(Pc + Pf)}{L}$ if $\frac{Pc}{(Pf+L)}$ does not exceed maximum

EXHIBIT E

SIZE AND PACKING INDEX DATA ON INDIVIDUAL PIGMENTS

Code	Name	Gal/Lb.		Eff. Dia. (Microns)	Size Range (Dia. in Microns)	
W- 1	China Clay	0.0463	0.59	15	60 - 0.6	
W- 3	TiO_2 ((YC(R))	0.0309	0.53	0.6	3 - BRL	
W- 4	Mag. Silicate Med.	0.0415	0.54	30	100 - 0.5	*
W- 5	TiO_2 (T)	0.0309	0.69	0.6	3 - BRL	
W- 8	ZnO (Am. Proc.)	0.0202	0.77	0.8	5 - BRL	
W- 12	Barytes (Micronized)	0.0268	1.77	6	30 - 0.3	*
W- 16	TiO_2 (FF)	0.0309	0.71	0.6	3 - BRL	
W- 27	Mag. Silicate	0.0415	0.39	30	200 - 2	*
W- 28	TiO_2 (R-110)	0.0287	0.84	0.4	2 - BRL	
W- 30	Blanc Fixe (Reg.)	0.0285	0.70	2	15 - 0.5	
W- 31	Silica (X + 1)	0.0448	1.32	10	100 - 0.1	*
W- 41	ZnO (XX-55)	0.0215	0.77	0.6	2 - BRL	
W- 43	TiO_2 (R-510)	0.0287	0.76	0.4	2 - BRL	
W- 44	Diat. Earth (J-M #110)	0.0521	0.22	8	50 - 0.5	
W- 49	TiCal (R-30)	0.0369	1.04	0.8	50 - BRL	
W- 50	TiO_2 (R-610)	0.0287	0.71	0.4	2 - BRL	
W- 52	Antimony Oxide	0.0210	0.78	2	10 - BRL	
W- 60	ZnO (Acicular)	0.0215	1.11	3	6 - BRL	
W- 62	Silica (Am.Silex Vel.)	0.0455	1.09	4	60 - 0.6	*
W- 65	ZnO (Special)	0.0212	0.7	2	6 - BRL	
	(Lot Variation)		± 0.1			
W- 73	$CaCO_3$ (Surfex)	0.0453	1.55	2	30 - 3	
W- 87	Blanc Fixe (Special	0.0285	0.61	2	15 - 0.5	
W- 88	Mica (Silver Sheen Spec)	0.0415	0.31	20	1.5 - 0.1	*
W- 90	$CaCO_3$ (Gilders Whiting)	0.0446	1.42	10	100 - 1	*
W- 93	TiO_2 (ZL 597)	0.0287	0.96	0.5	2 - BRL	
W- 98	Talc (Nytal 300)	0.0445	0.65	8	60 - 0.6	*
	(Lot Variation)		± 0.1			
W- 99	Diat. Earth (J-M #281)	0.0521	0.28	4	30 - 0.3	*
W-132	Talc (HO)	0.0427	0.54	15	120 - 0.1	*
W-142	$CaCO_3$ (Atomite)	0.0443	1.57	3	15 - 0.5	
W-154	ZnO (Kadox)	0.0221	0.61	0.3	20 - BRL	
W-165	Diat.Earth(Celite #266)	0.0601	0.20	3	10 - 0.1	
W-215	Black Iron Oxide	0.0243	0.71	0.2	2 - BRL	
W-381	Cad. Red (Deep)	0.0280	1.24	0.8	20 - BRL	
W-382	Cad. Red (Medium)	0.0275	1.09	0.4	20 - BRL	
W-383	Cad. Red (Light)	0.0274	1.03	0.5	15 - BRL	
W-384	Cad. Red (Medium Lt.)	0.0285	1.06	0.6	20 - BRL	
W-609	Zinc Yellow (C.P.)	0.0346	0.55	1	2 - 0.5	
W-610	Chrome Orange Dk. (CP)	0.0175	0.65	1.2	5 - 0.05	
W-624	Ferrite Yellow Lemon	0.0299	0.43	0.2	10 - BRL	
W-630	Ferrite Yellow Orange	0.0299	0.55	3	30 - BRL	
W-676	Chrome Yellow (Med.)	0.0201	0.82	0.2	5 - BRL	
W-677	Chrome Yel.Orange (Lt) (CP)	0.0174	1.13	0.4	1.5 - BRL	
W-679	Chrome Yel.(Lt.)(CP)	0.0202	0.64	0.4	3 - BRL	
W-697	Shading Yellow	0.0219	0.72	0.3	1.5 - BRL	

DUP030001787

Code	Name	Gal/lb.		Eff. Dia. (Microns)	Size Range (Dia. in Microns)	
W-872	2720 Red Iron Oxide	0.0288	1.12	5	80 - BRL	
W-878	Domestic Iron Oxide	0.0288	1.05	2	40 - BRL	
W-895	98% Red Iron Oxide	0.0265	0.31	0.5		
W-1001	FT Asbestine	0.0415	0.55	5	60 - 0.3	*
	(Lot Variation)		± 0.1			
W-1002	ASP 400	0.0465	0.77	7	75 - 0.1	*
	ASP 100	0.0466	0.69	1.5	5 - 0.05	
	Pure Cal M	0.0446	0.85	1.5	3 - 0.3	

BRL - Below resolution limit of optical microscope

*Normally free of dispersion resisting agglomerates

Notes: #1 - Size data give only overall size characteristics and microscopic examination of individual pigments is recommended where more specific data are desired. The largest particle size given under Size Range is that of the largest crystals or basic particle observed including particles of apparently different compositions than the pigment.

#2 - $\bar{n}$ and Size Data are subject to corrections and additions as more experimental data are obtained.

DUP030001788

52-01-B-43 - 2/28/52

Exhibit F

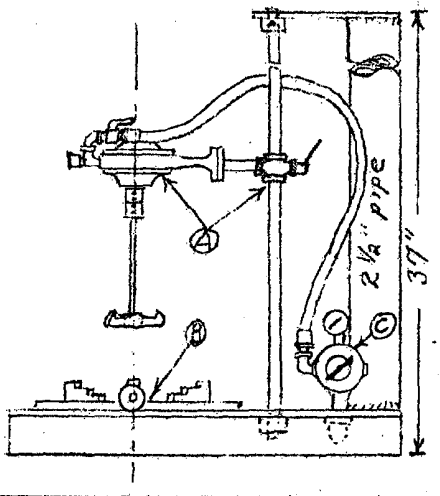

Portable Air Mixer Assembly

Notes: Twin units can be assembled on a single base. Other assemblies can be used if they provide rigid motor shaft support and accurate agitator centering.

(A) Eclipse Air Brush Mixer-Type AL (less base)
(B) Clamp plate same as for torque table (Exh. G)
(C) DeVilbiss - Air Regulator Assembly Type HQ-601

(scale 1/8" = 1")

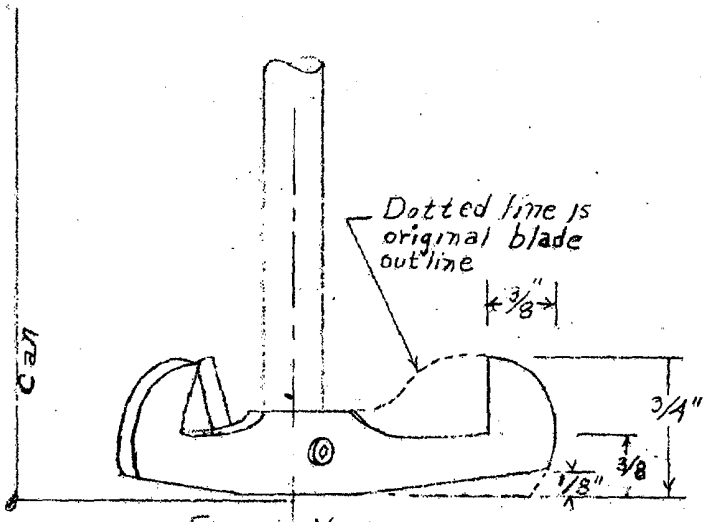

Front View

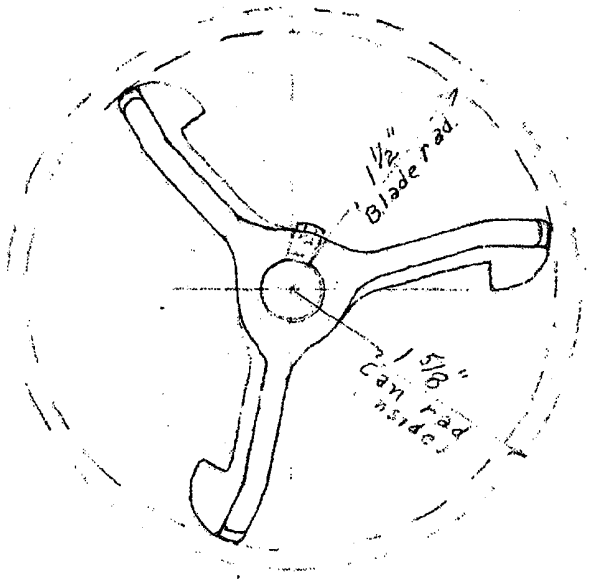

(full scale)

Bottom View

"48 Process" Agitator for Pint Can Mixer

Modified Eclipse Air Brush Co. PN-3D Stainless Steel Propeller

Operating Specifications:

Volume: 1/4 to 3/3 pint actual dispersion mixture

Speed: 325 ± 50 rpm (approx. visual check)

Power: Full load = 1.5 in. lb. torque. Motor is calibrated for torque vs. psi gage

Control: Air pressure regulator is used to maintain speed and torque is read from output pressure gage.

Pint Can 48 Process Unit

E.I. du Pont de Nemours & Co.
3500 Gray Ferry Ave., Phila.
Phila Process & Methods Group
2-15-51 D.L. Bosse

DUP030001789

SP-01-5-44

Exhibit G1
2/18/55

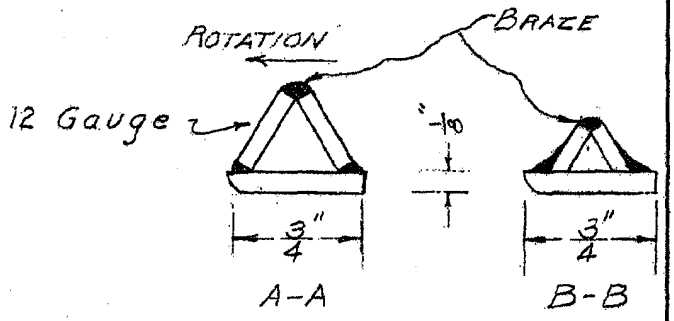

SECTION A-A & B-B
Scale Full

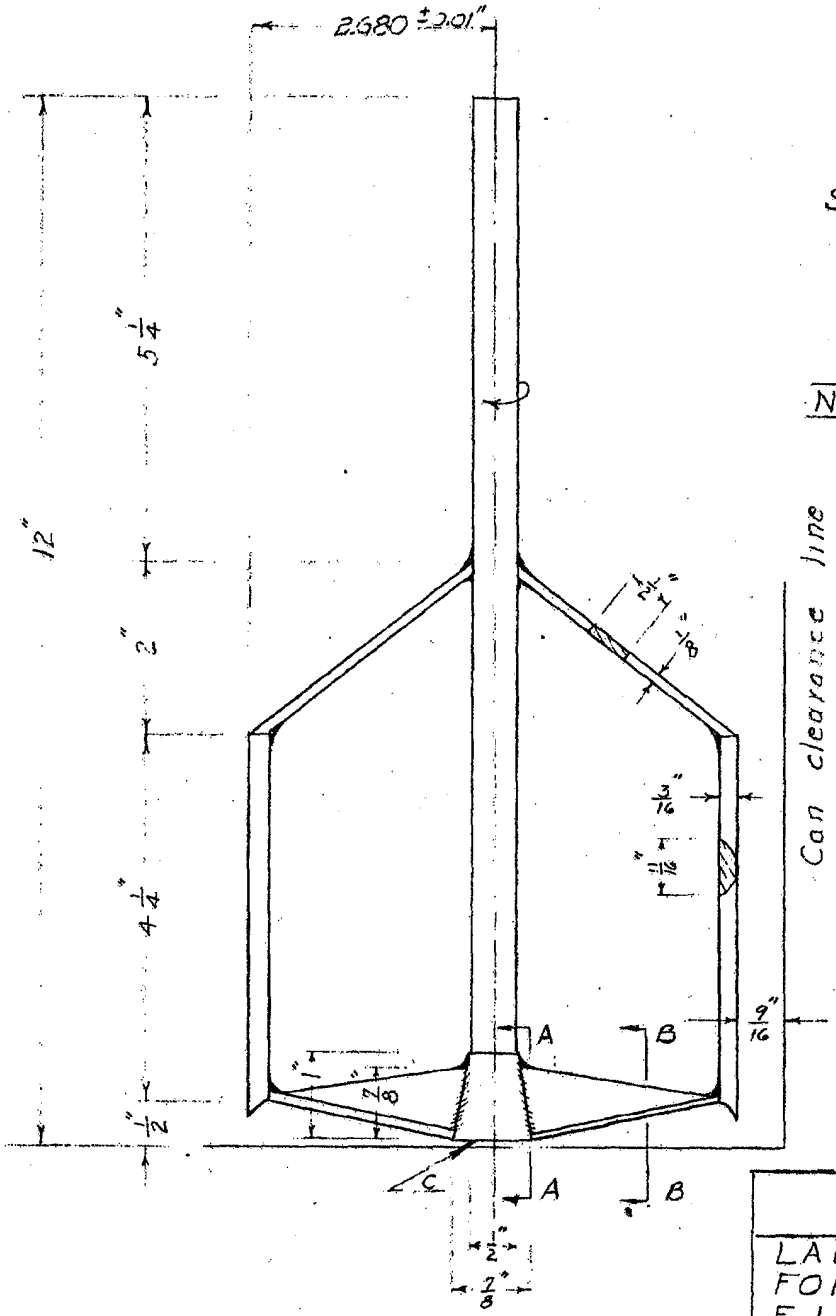

NOTE All welded surfaces smooth and streamlined

OPERATING SPECIFICATIONS
R.P.M.: 260 ± 5 R.P.M.
FULL LOAD TORQUE: 35 LB. IN.
DISP. MIXTURE VOL: 0.2 to 0.5 GAL.
BOTTOM CLEARANCE (C): BELOW 1/32"

AGITATOR
ONE GALLON UNIT
LAB 48 PROCESS
FOR 6 1/2" I.D. 1 GAL. CAN
E. I. du Pont de Nemours
3500 Grays Ferry Av. Phila.
Scale 1/2" = 1" 12-8-54 S. O'Connor

DUP030001790

EP-01-B-45
2/18/55
Exhibit G-2

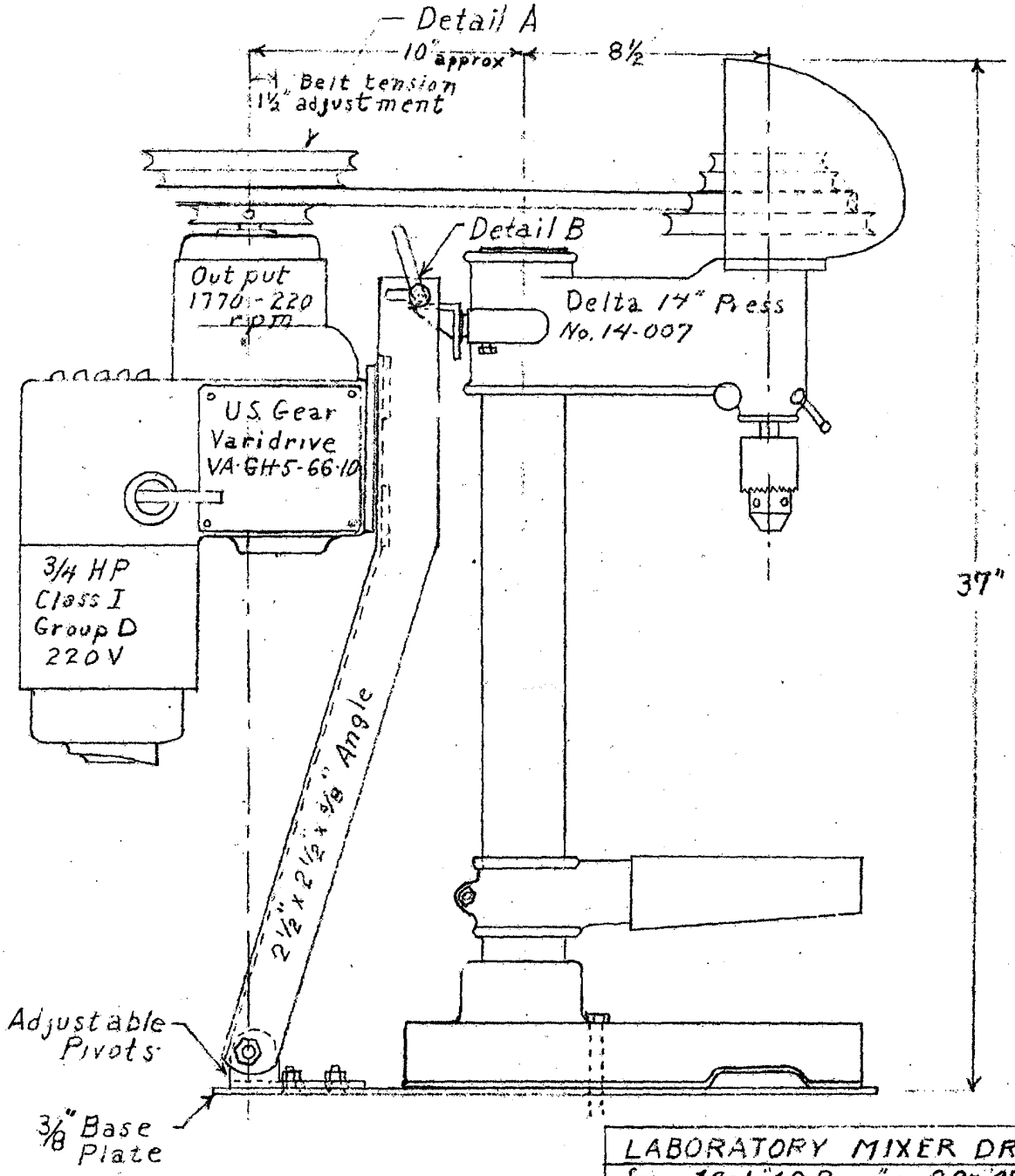

LABORATORY MIXER DRIVE
for 1 Gal "48 Proc." or 2 Qt 47 Proc.
E. I. duPont de Nemours & Co.
3500 Grays Ferry Ave. Phila.
2 - 14 - 55 D.G. Bosse
Schematic – Ref: Exh. G-3 for Detail

DUP030001791

Exhibit G3

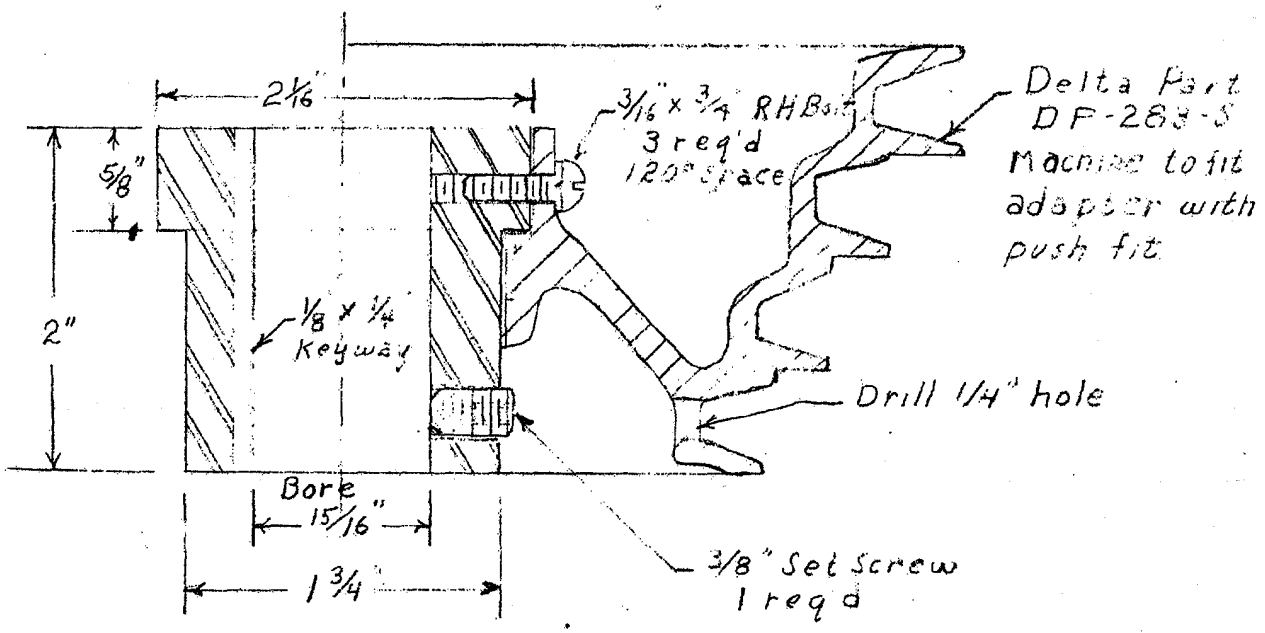

Detail A (full scale)

Drill Press Pulley Adapter for US Gear Varidrive

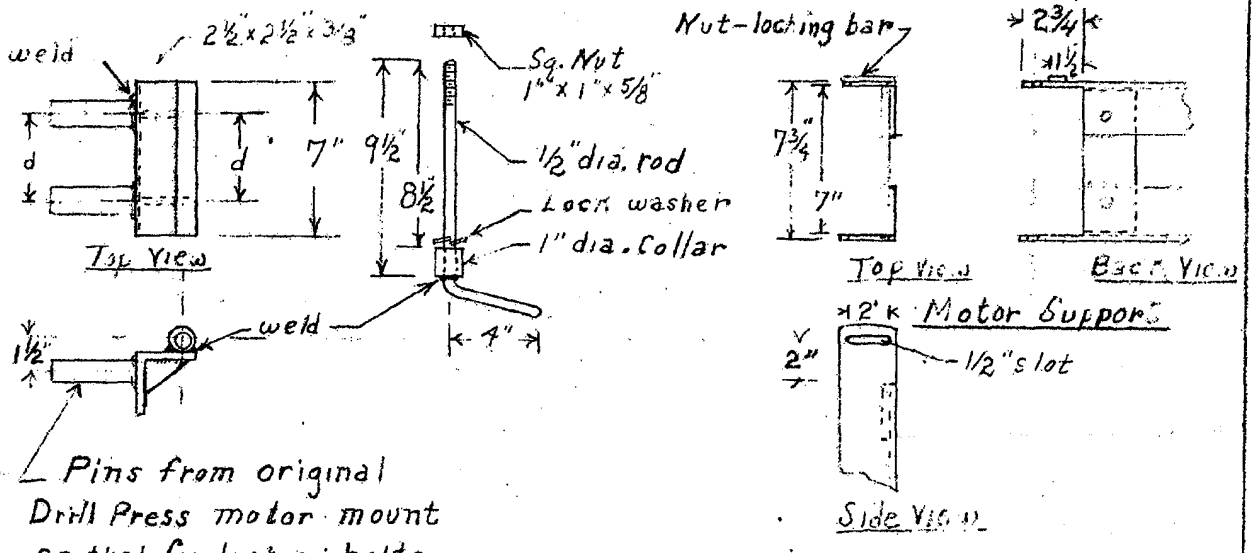

Pins from original Drill Press motor mount spotted for locking bolts in Drill Press head and spaced to match (dimension "d" approx. 4").

Detail B (scale 1/4 = 1")

Belt Tension Adjustment + Release

Laboratory Mixer
Drive "47" + "48" Proc.
Motor Pulley + Support
E I du Pont de Nemours
3500 Grays Ferry Ave
Phila Finishes Plant
2-15-65 DG Bosse

DUP030001792

Exhibit G4

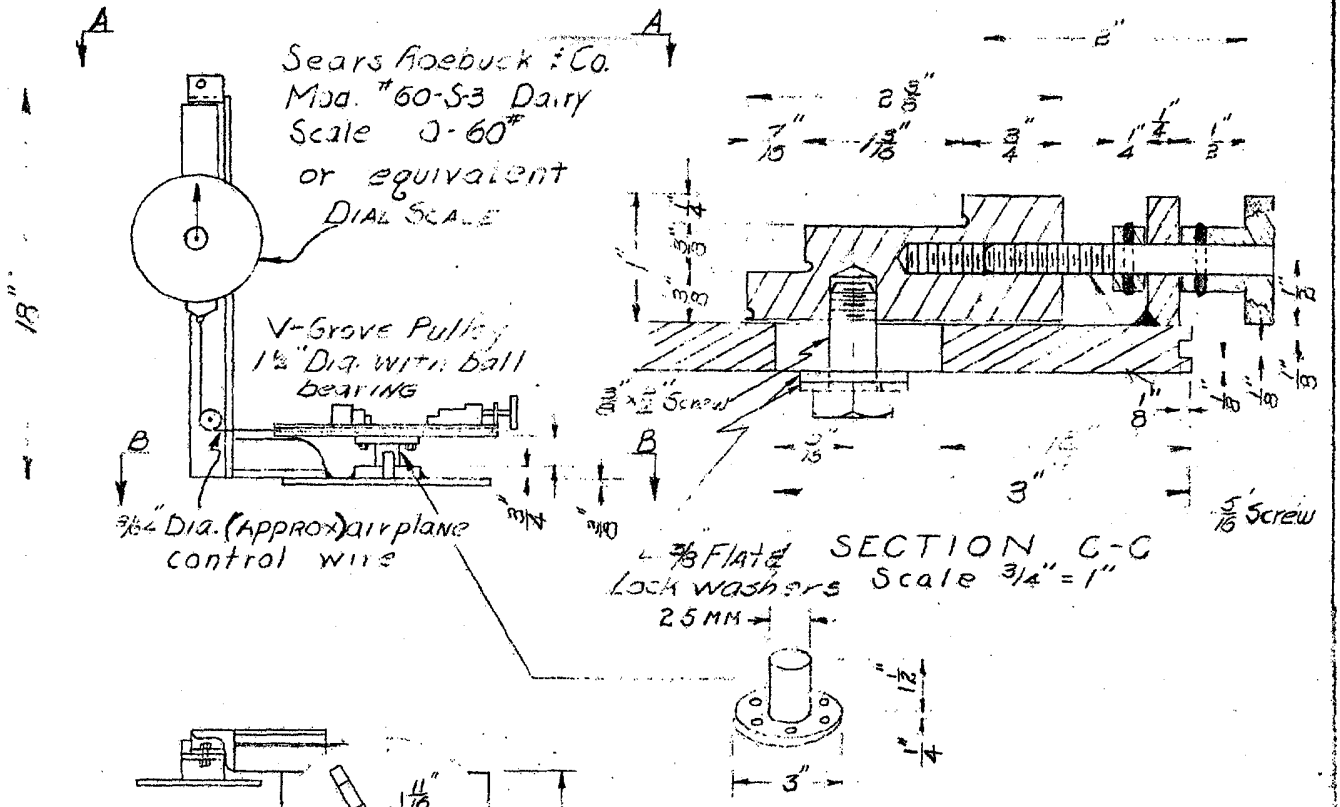

SECTION A-A

NOTE Inch Pounds torque = Indicated lbs. x 5"
Table dia. at base of grove 10.5". 3-Jaw clamp with automaticly centers 1/16TH 1/4TH & 1 Gal. Cans

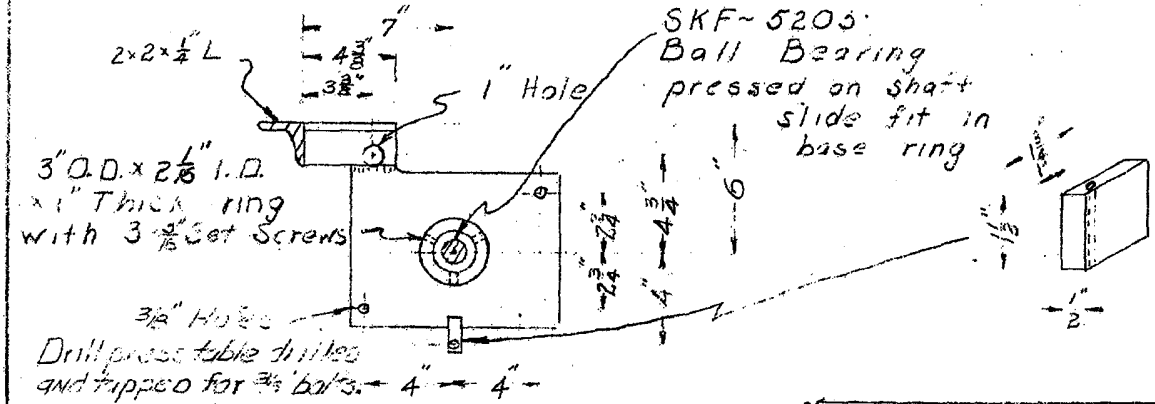

SECTION B-B

TORQUE TABLE FOR LAB 14" DELTA DRILL PRESS MIXING UNIT

E. I. du Pont de Nemours & Co.
3500 Grays Ferry Av., Phila.
Scale 1"=1" 12-9-54

DUP030001793

APPENDIX

SECTION B

"48 PROCESS" MIXER DESIGN

DESIGN PARAMETERS AND CALCULATIONS

AGITATOR DESIGN PARAMETERS	Figure 1
VERTICAL BLADE SECTION DESIGN	Figure 2
TOP HUB AND CROSS-ARM SECTION DESIGN	Figure 3
BOTTOM HUB DESIGN AND SWEEP-BLADE ATTACHMENT	Figure 4
BOTTOM SWEEP-BLADE SECTION DESIGN	Figure 5
PUMP-IMPELLER SECTION DESIGN	Figure 6
VALVE SCRAPER BLADE AND SPIKE DESIGN	Figure 7
GENERAL AGITATOR CONSTRUCTION NOTES	Figure 8

PRODUCTION UNIT ASSEMBLY

TANK, JACKET, AND PIPING	Figure 9
MOTOR, REDUCER, AND MOUNT	Figure 10
CHECKLIST 1000-GALLON UNIT.	Figure 11
PIGMENT LOADING FUNNEL	Figure 12
AVAILABLE CONSTRUCTION DRAWINGS	Figure 13

DUP030001794

Figure #1

"48 PROCESS" AGITATOR
OVERALL DESIGN PARAMETERS

AGITATOR SPEED:	200/√Tank Diameter in feet = rpm
SHEAR RATE:	625 feet per minute/Inch of Clearance
SHEAR STRESS:	2 Lbs./Sq. inch of Effective Shear Area
TOLERANCES:	5% plus or minus for each Parameter

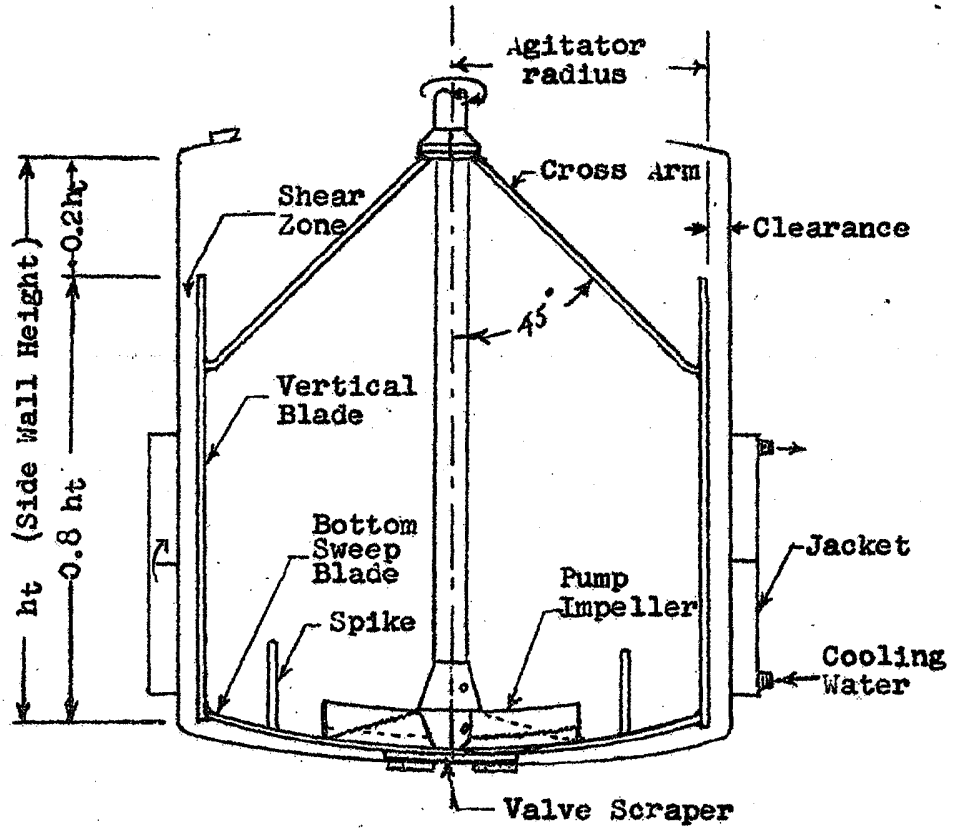

OVERALL DESIGN CALCULATIONS

(Shear rate, shear stress, and rpm values are selected in conformance with overall design parameters)

VERTICAL BLADE CLEARANCE:

$$\text{Inches from crest to wall} = \frac{(\text{Agitator Radius in ft.})(6.28)(\text{rpm})}{(\text{Shear Rate})}$$

EFFECTIVE SHEAR AREA:

Square Inches = 0.9 Area of flat side of Vertical Blade + 0.3 Area of under side of Bottom Sweep Blade

TOTAL SHEAR FORCE:

Pounds at Shear Surface = (Shear Stress)(Eff. Shear Area)

POWER REQUIREMENT:

$$\text{Horsepower} = \frac{(\text{Total Shear Force})(6.28)(\text{rpm})(\text{Agitator radius in Ft.})}{33{,}000}$$

D.G.Bosse, Phila. P&M, 3-28-55

DUP030001795

"48 PROCESS" AGITATOR
VERTICAL BLADE SECTION DESIGN

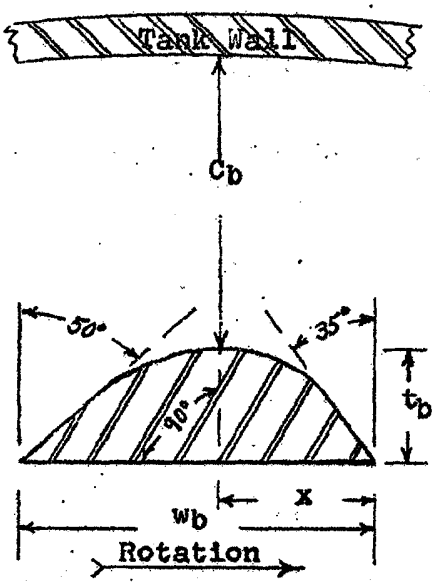

Vertical Blade Height:

h_t = Tank Wall Height

h_b = 0.8 ht (See Fig. 1)

Vertical Blade Width:

$w_b = \frac{\text{Agitator Radius}}{12}$

Tolerance: $-0 + 0.2\ w_b$

Vertical Blade Shape:

(See adjacent sketch)

C_b = Vertical Blade Clearance

$t_b = C_b/2.5$

Tolerance = $0.1\ t_b$

$x = 0.45\ w_b$

Construction Notes:

Where t_b is larger than 5/8", milling from rectangular bar stock is recommended.

Where t_b is 5/8" or less less, use of standard half-oval bar stock is recommended, milling leading edge only.

Laboratory units use symetrical half-oval shape.

All surfaces smooth.

Orientation and Attachment to Bottom Sweep Blade:

(See adjacent sketches)

Vertical Blade extends 1/2" below Bottom Sweep-Blade. Welds on top and bottom sides are built up to sufficient thickness for grinding to smooth, well-rounded corners.

Vertical Blade is aligned with the trailing edge of the Bottom Sweep-Blade.

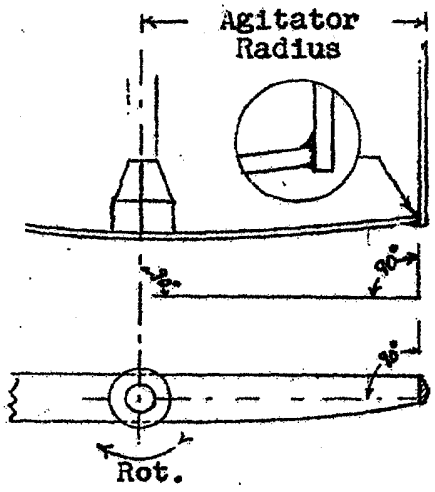

D.G.Bosse, Phila. P&M 3-29-55

DUP030001796

"48 PROCESS" AGITATOR
TOP HUB AND CROSS ARM SECTION DESIGN

Top Hub - General Design:
Solid steel split hub, bored for compression fit on shaft. (See adjacent sketch).

Top Hub Diameter:

$$d_h = 1.5 \sqrt[3]{\text{Agitator Radius}}$$

(See Figure 2)
*Tolerance: $\pm$ 0.08 d_h
(*Utilize tolerance to maintain $d_h/d_s \geq 2$)

Top Hub Height:

$$s_h = 0.2\ d_h$$

Total height is determined by upper bevel angle, s_h, and lower bevel which is extended to obtain a beveled face width equal to the cross arm thickness.

Top Hub Position:

Under side even with top of tank wall (see adjacent sketch).

Cross Arm Width and Shape:

Same as vertical Blade
(See Figure 2)

Cross Arm Orientation and Attachment:

Cross Arm slopes downward at 45 degrees from horizontal with flat side up. Outer tip is bent (hot) to provide a right angle junction with the Vertical Blade and horizontal extension of about three times the Cross Arm thickness (t_b) inward from the Vertical Blade.

All welds are built up to sufficient thickness for grinding to smooth well-rounded corners.

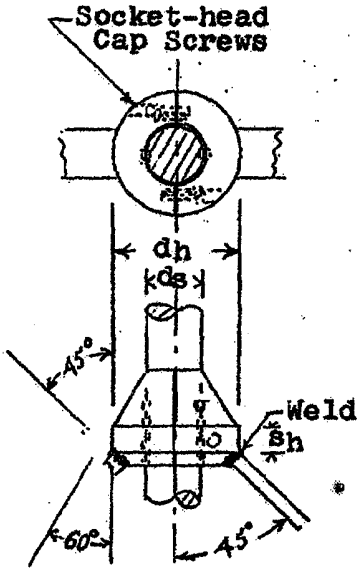

Construction Notes:
Hub is bored to size after assembly of the half-sections.

Outer tip of Cross Arm is bent to correct angle but length is not adjusted until agitator assembly and exact requirements for correct vertical Blade positioning are determined.

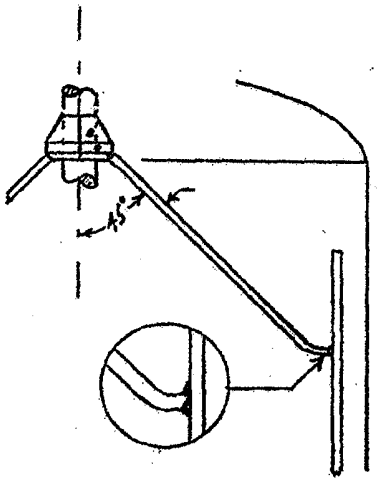

D.G.Bosse Phila. P&M 3-30-55

DUP030001797

"48 PROCESS" AGITATOR
BOTTOM HUB DESIGN AND SWEEP-BLADE ATTACHMENT

Bottom Hub-General Design:

Solid steel hub bored for compression fit on shaft. (See adjacent sketches.)

Bottom Hub Diameter:

Same as Top Hub. (See Figure 3.)

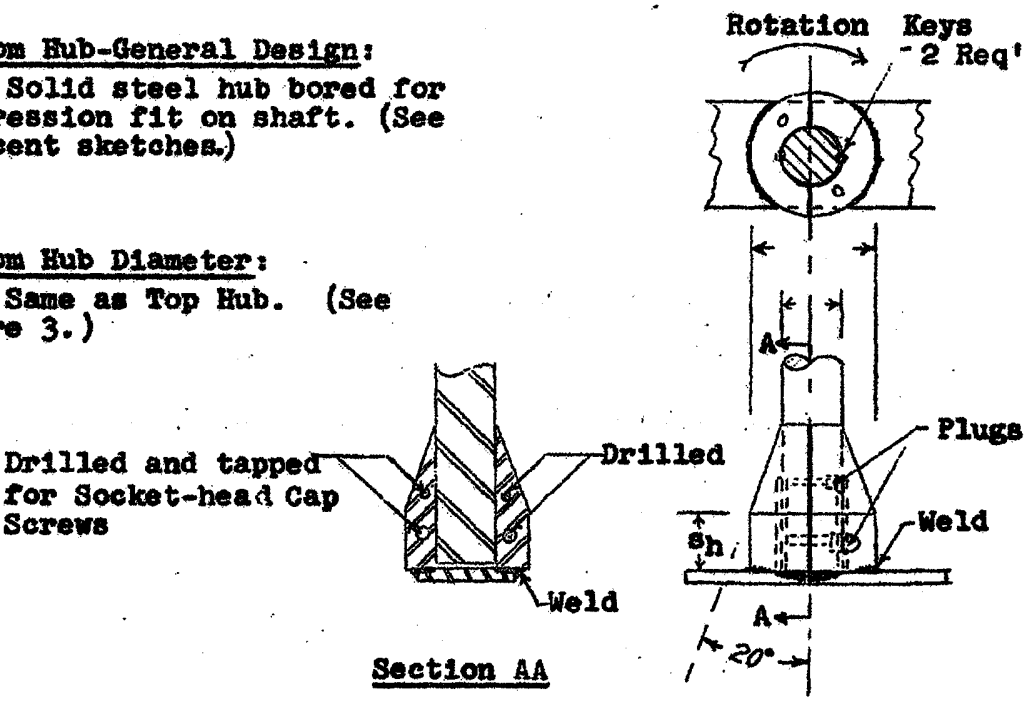

Section AA

Bottom Hub Height:

s_h = Pump Impeller height (See h_p Fig. 6)
Total height determined by s_h and top bevel angle.

Bolts and Plugs:

Four socket-head cap screws are used. Lower cap screw diameter equals Vertical Blade thickness (t_b) Upper cap screw diameter is approximately one-half the lower.

Cap screws are counter-sunk, and the remaining openings are filled by threaded plugs which are cut off flush with the hub surface.

Fastenings are identical in top and Bottom Hubs.

Construction Notes:
Hub is bored to size after assembly of the half-sections.

Bottom Blades are welded at all lines of contact. The projection of the hub beyond the edge of the Bottom Sweep Blade is filled and ground smooth.

D. G. Bosse Phila. P&M 3-31-55

DUP030001798

"48 PROCESS" AGITATOR
BOTTOM SWEEP-BLADE SECTION DESIGN

Bottom Sweep-Blade Length:

Projected length (l_s) is adjusted to provide the correct Vertical Blade Clearance (C_b). (See Figure 1.)

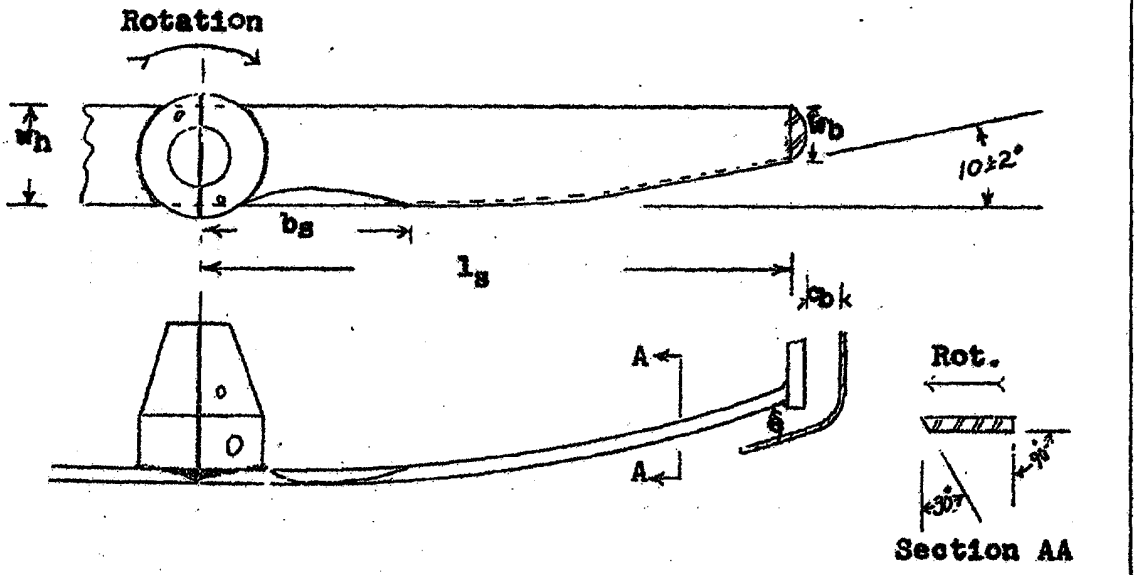

Bottom Sweep-Blade Width:

$w_h = \sqrt{\text{Agitator Radius}}$

Tolerance: $\pm 0.08\ w_h$

w_b = Vertical Blade Width

Width at intermediate points is determined by the $10 \pm 2°$ trail-angle.

Bottom Sweep-Blade Bevels:

The entire length of the leading edge is beveled. The bevel adjacent to the hub is approximately 45 degrees and its length $b_s = 0.3\ l_s$. The balance of the edge is beveled as indicated in Section AA.

Bottom Sweep-Blade Thickness:

Thickness is equal to the Vertical Blade thickness (t_b) adjusted to the nearest standard steel plate thickness.

Bottom Sweep-Blade Curvature:

Construction Notes:

Curvature is obtained either by use of stock rolled to the correct radius, or shaping on a form (hot).

Leading edge bevels are rough cut with a torch and ground smooth.

Bottom Sweep-Blade Curvature:

Curvature is greater than that of the tank bottom and is adjusted to provide 1.5 inches clearance at center and a clearance at point "e" = C_b. (Small units for vessels without central bottom discharge valves are designed with the same clearance at point "e" and less than 0.25 inch at center, for operation without a Valve Scraper Blade.)

D. G. Bosse Phila. P&M 4-1-55

DUP030001799

"48 PROCESS" AGITATOR
PUMP-IMPELLER SECTION DESIGN

Pump-Impeller Length:

Projected length (l_p) = 0.5 l_s (See Figure 5.)

Pump-Impeller Height:

Vertical height (h_p) = 0.14 l_s

Pump-Impeller Orientation:

Attachment to the hub is immediately adjacent to the hole for the cap screw, with the vertical plate angled backward to align with the trailing edge of the Bottom Sweep-Blade.

Construction Notes:

The vertical plate is shaped and attached first. Front and back fillers are shaped and attached with heavy fillet welds which are ground to obtain a smooth continuous surface.

Pump-Impeller Fillers:

The front filler is a quarter-section of steel pipe. The back filler is 1/4" flat steel plate. (See Sections AA and BB)

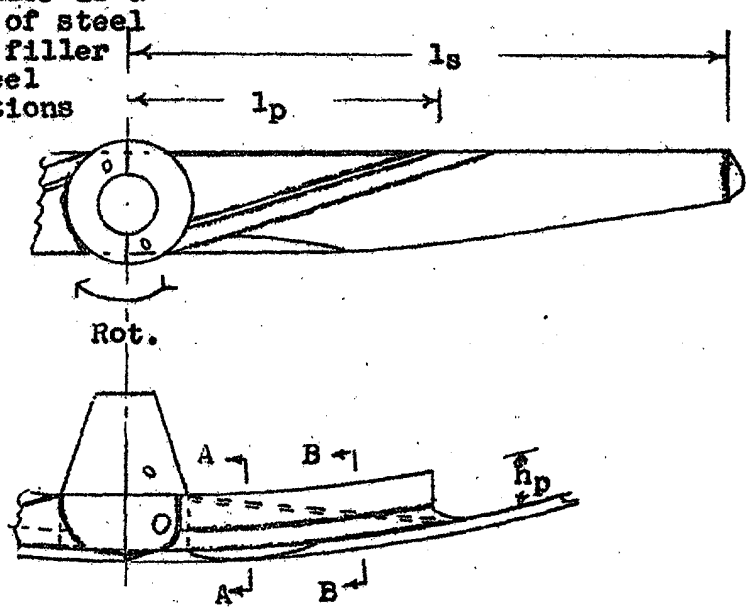



Section AA

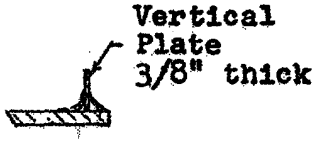

Section BB

D. G. Bosse Phila. P&M 4-1-55

DUP030001800

"48 PROCESS" AGITATOR
VALVE SCRAPER-BLADE AND SPIKE DESIGN

Spike Construction:

Spike is made from round rod and rectangular bar stock with the round rod extended through the Bottom Sweep-Blade and welded in place.

Rod Dia. = Vertical Blade thickness (t_b)

Bar: 0.5 Rod Dia. by 1.0 Rod Dia.

Weld: Heavy fillet welds ground smooth.



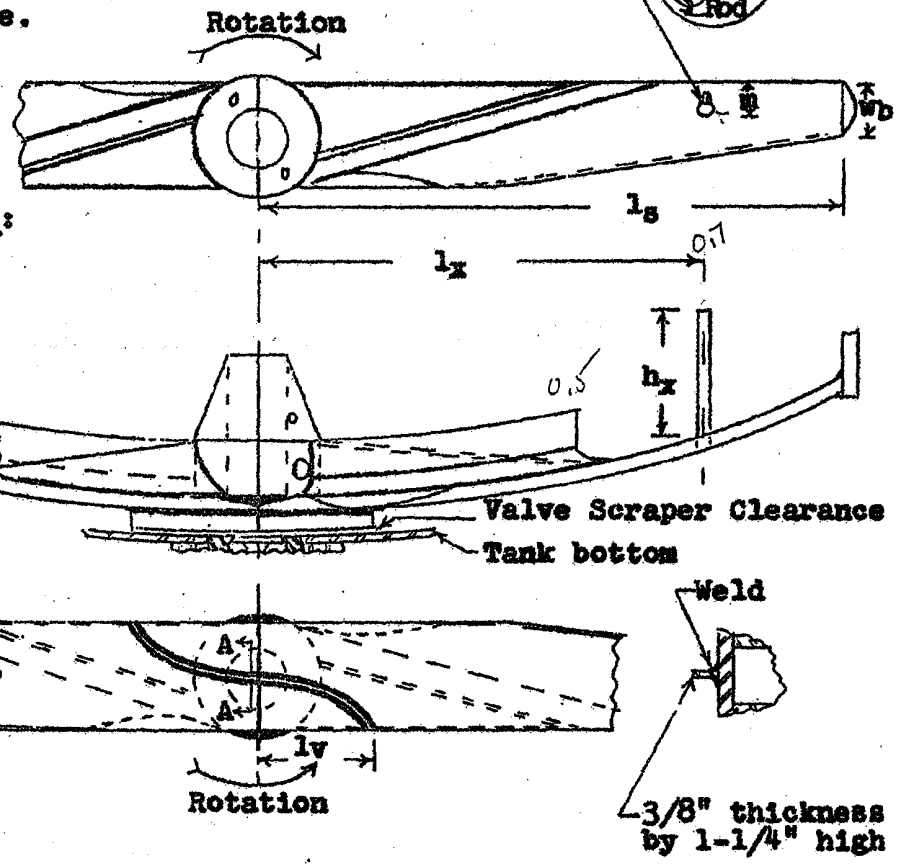

Spike Location:

$l_x = 0.7\ l_s$

$m = 0.7\ w_b$

Spike Height:

$h_x = 0.3\ l_s$

Valve Scraper-Blade Construction:

Rectangular bar 1-1/4" by 3/8" is bent to shape shown in sketch and attached to the Bottom Sweep-Blade with heavy fillet welds. Welds are ground smooth.

Valve Scraper-Blade Length:

Projected length (l_v) = 0.2 l_s

Valve Scraper-Blade Clearance:

1/4"

D. G. Bosse Phila. P&M 4-4-55

DUP030001801

"48 PROCESS" AGITATOR
GENERAL CONSTRUCTION NOTES

Tank Design and Specifications:

Standard dished-bottom vertical mixing tanks, equipped with a jacket on the lower half of the side wall, are used. The height/diameter ratio should be between 0.75 and 1.25 for satisfactory performance, and 1.0 is preferred for general application.

Variation in tank diameter measured at different points should not exceed 2% for operation with "48 Process" agitators and new tanks should be held to 1% variation.

Tank Measurement for Agitator Design:

Average tank diameter is used to determine Agitator Radius (see Figure 1.) The Bottom Sweep-Blade curvature may be calculated from the dish-bottom radius, but construction of a sheet metal template from a template of the actual tank bottom is preferred. The template is useful for both original shaping of the Bottom Sweep-Blade and maintaining correct shape during assembly.

Agitator Assembly:

The agitator is assembled on the shaft, using jig fixtures as necessary to prevent shifting or distortion of the various sections during welding operations. Vertical Blade clearance is the most critical dimension and variation in distance from Vertical Blade crest to shaft center should not exceed 1/8" after assembly.

The suggested assembly sequence is as follows:

1. Top and Bottom Hub placement
2. Bottom Sweep-Blade attachment
3. Upper Cross Arm attachment
4. Vertical Blade positioning and attachment
5. Pump Impeller Section, Spike, and Valve Scraper-Blade installation

All welds are ground smooth and streamlined and all surfaces are made smooth and free of weld splatter or pits to minimize buildup of material on the agitator.

Agitator static balance is checked and any appreciable unbalance is corrected.

Prior to dissembly, all major joint welds are reheated to relieve stress to avoid difficulty in assembling the agitator in the mixer and risk of stress-crack development during operation.

Agitator Installation and Alignment:

The agitator is centered at all orientations and the shaft is aligned parallel to the tank wall. Bottom clearance under the Valve Scraper-Blade is adjusted to 1/4".

Cap screws in the hubs should be carefully tightened to avoid excessive stress loading.

D. G. Bosse Phila. P&M 4-5-55

DUP030001802

"48 PROCESS" PRODUCTION UNIT ASSEMBLY
TANK JACKET AND PIPING

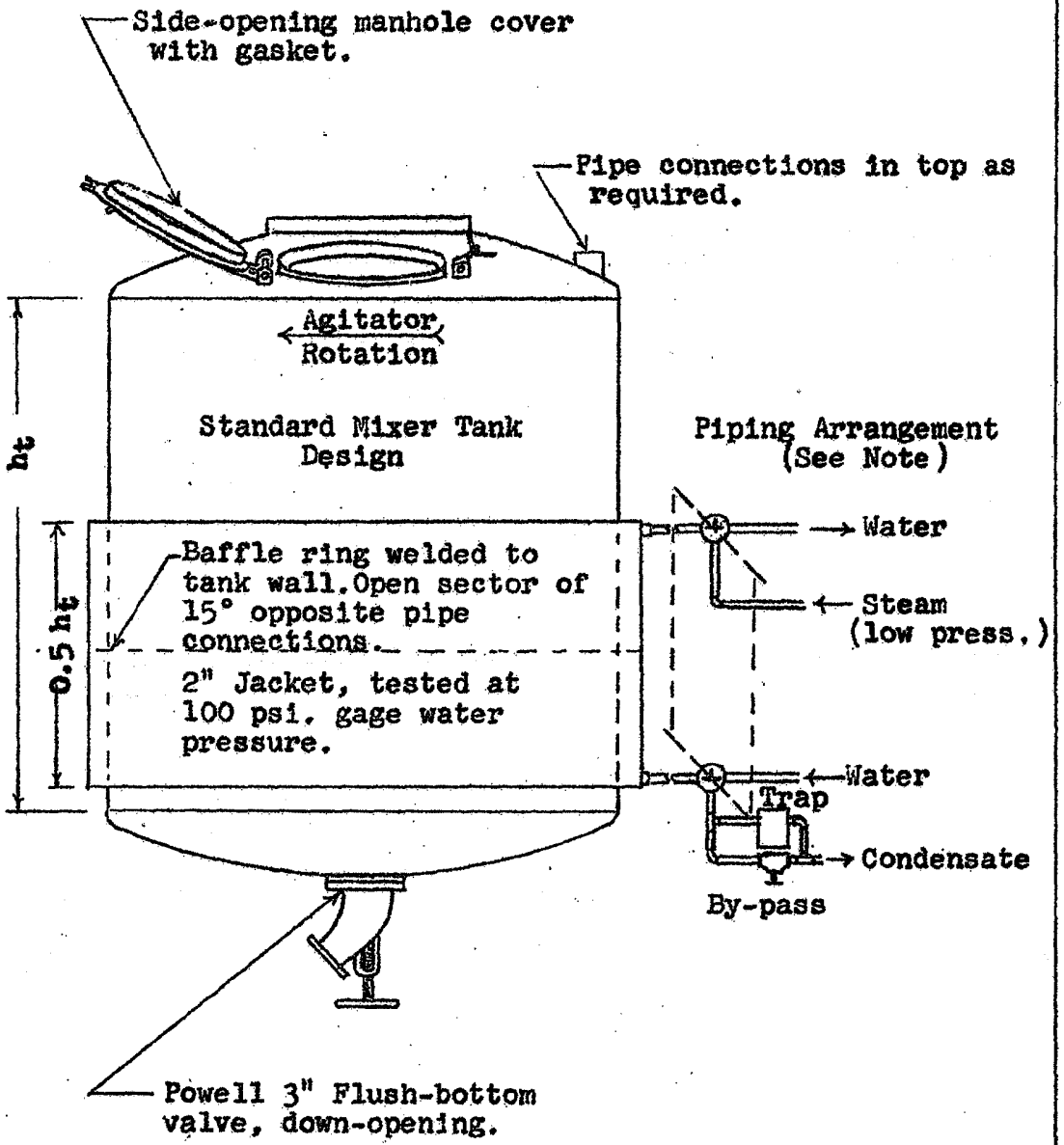

Note: Only cooling water is used at present but mechanically interlocked 3-way valve system for both cooling water and low pressure steam is shown to cover possible future requirements.

D. G. Bosse Phila. P&M 4-7-55

DUP030001803

Figure 10

"48 PROCESS" PRODUCTION UNIT ASSEMBLY
MOTOR, REDUCER AND MOUNT

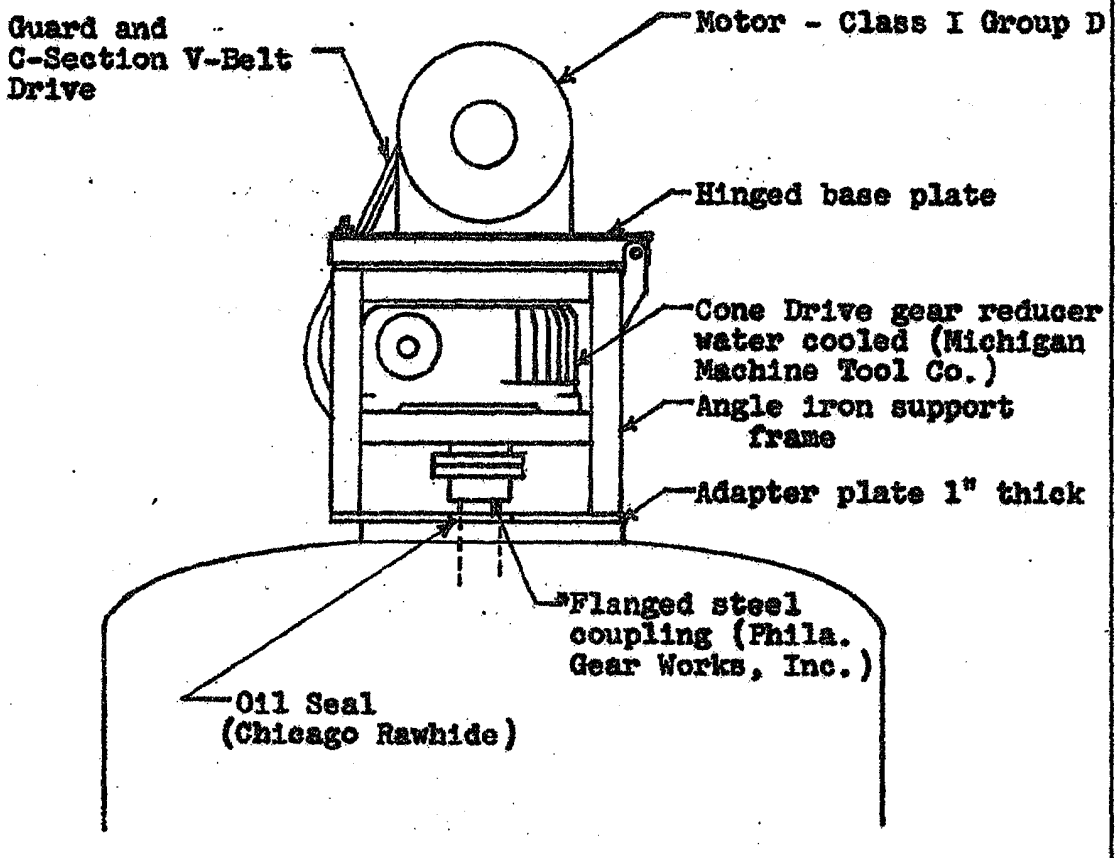

Construction Notes:

Angle iron frame is of welded construction except for removable member required to permit placement of the gear reducer. Connections between this frame, adapter plate, and mixer are bolted.

*Coupling may be omitted if extended gear reducer shaft is used, and the height of the angle iron frame is reduced accordingly.

D. G. Bosse Phila. P&M 4-11-55

DUP030001804

"48 PROCESS" PRODUCTION UNIT ASSEMBLY CHECK LIST
1000-GALLON UNIT

TANK	STANDARD
Diameter I.D.	75 in.
Height Side Wall	60 in.
Dish bottom radius	72 in.
Jacket - lower 1/2 side wall	yes *
Cover - side hinged, gasketed with toggle bolt	yes

DRIVE	
Motor - HP	40 *
- Speed	1760
Reducer - Manufacture	Cone Drive Gear
- Size	HV-7810
- Ratio	10:1
Method of Coupling Motor & Reducer	V-Belt 6C Sec.
Mounting arrangement Motor & Reducer	Vertical Tower
Coupling - Reducer to Agitator Shaft	Solid Flanged
Output RPM	81 ± 1*

AGITATOR	
Shaft Diameter	3-1/2 in.
Clearance - Vertical blade to tank wall (Min. point)	2-1/2 in.*
- Bottom sweep blade to center tank bottom	1-1/2 in.*
- Bottom wiper blade to center tank bottom	1/4 in.*
Overall runout - Variation vertical blade side wall clearances (any blade position - max.)	1/8 in.*
Central Pump Blades - Orientation	Over bot. blade
- Height above bottom blade	4 in.*
- Length (hub center line to tip)	16 in.*
Bottom Blade - Radius ÷ Tank Bottom Radius	0.9 *
Spike Height	10 in.*

* Primary design requirement

D. G. Bosse Phila. P&M 4-11-55

DUP030001805

"48 PROCESS" PRODUCTION UNIT ASSEMBLY
PIGMENT LOADING FUNNEL

General Construction Notes:

The two-piece loading funnel below is constructed of heavy gauge sheet metal. The handles and cross-bar in the funnel proper are made of round rod.

The funnel proper is designed to remain in place during the entire pigment loading operation and should fit snugly in the manhole as it functions as both a splash guard and a pigment distributer.

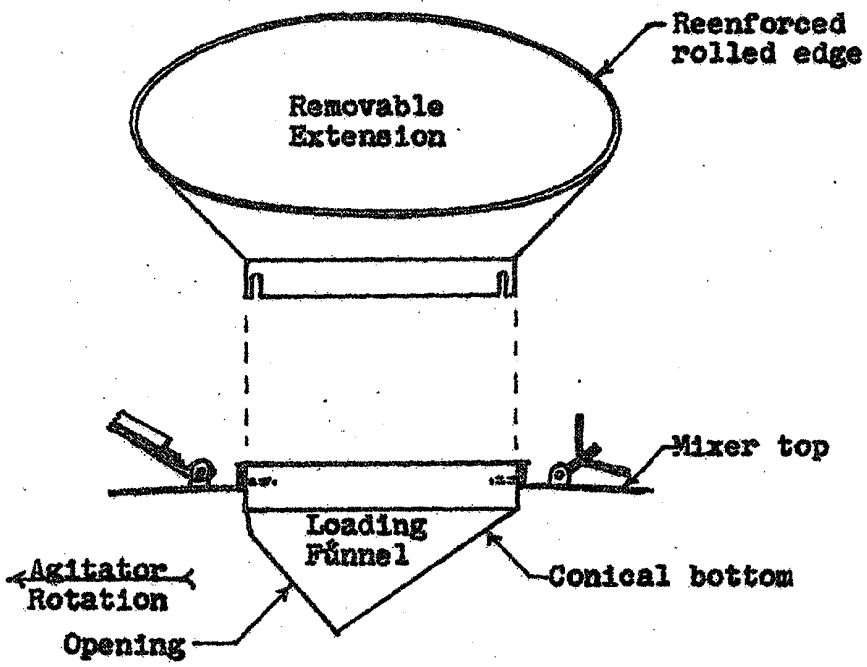

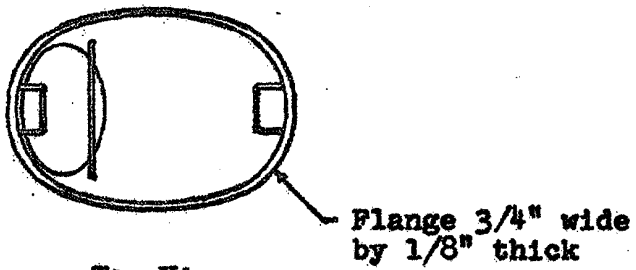

Top View
Loading Funnel

D. G. Bosse Phila. P&M 4/12/55

DUP030001806

"48 PROCESS" PRODUCTION UNIT ASSEMBLY
AVAILABLE CONSTRUCTION DRAWINGS

PHILA.ENG. FILE NO.	ITEM AND TITLE
	1000-GALLON UNIT AGITATOR
P-971	"48 Process Mixer Design - Modification Central Pump and Vertical Blades" Date revised: Aug. 25, 1952.
	1000-GALLON UNIT AGITATOR HUBS
P-984	"Hubs for 48 Process Agitator" Date: June 24, 1952.
	1000-GALLON UNIT TANK JACKET & VALVE FLANGE
P-1001	"Water Jacket for 48 Process Mixer and Flange Pad for 3", Figure 2310 Powell Flush Btm. Valve" Date: Sept. 25, 1952.
	1000-GALLON UNIT DRIVE DETAIL
P-1002	"Drive Mounting for 48 Process Mixer using Size 7810 Cone Drive, NEMA Frame 405 Motor, & 6-C V-Belt Drive on 11.0 PD. and 24.0 PD. V-Pulleys" Date: Sept. 27, 1952.
	1000-GALLON UNIT DRIVE ASSEMBLY
P-1004	"Assembly Drawing - 48 Process Mixer - 40 HP. Drive" Date: Oct. 3,1952.
	500-GALLON UNIT ASSEMBLY
P-1046	"Assembly Drawing for 500 Gallon Mixer" Date: May 20, 1953.
	500-GALLON UNIT AGITATOR
P-1047	"48 Process Mixer Agitator Design - Std. 500 Gal. Unit - 25 HP. 100 rpm. Drive" Date: June 1, 1953.

Note: The only alteration not included in the above drawings is in Spike dimensions: refer to Figure 7 of this report.

D. G. Bosse Phila. P&M 4-11-55

DUP030001807