PRICE 25.00

PLAINTIFF'S
EXHIBIT
USX-335

P&H

A PRODUCT OF
HARNISCHFEGER

REPLACEMENT PARTS MANUAL

P&H
QUALITY & SERVICE
SINCE 1884

HARNISCHFEGER
Milwaukee, Wisconsin U.S.A.

USHO 002161

SCF-P&H-1160

WARRANTY

The Company warrants every part and detail of the equipment to be delivered hereunder to be of proper materials and first class workmanship. Engines, motors, generators, buckets, and other accessories not of the Company's manufacture are not included in the foregoing warranty, these being covered by the warranties of their respective manufacturers. The foregoing warranty is exclusive and in lieu of all other warranties whether written, oral or implied (including any warranty of merchantability or fitness for purpose).

The Company's liability under its foregoing warranty shall be discharged by furnishing without charge, F.O.B. Milwaukee, Wisconsin, any part or parts as shall appear to the Company, upon its inspection, to be defective under normal and proper use within one year from date of shipment, or 2,000 hours, whichever expires first. Where claims for defects are made, the defective part or parts shall be delivered to the Company, prepaid at Milwaukee, Wisconsin, for inspection. The Company will not be liable for the cost of repairs, alterations or replacements, or any expense connected therewith made or incurred by the purchaser or its agents or servants, except upon written authority from the Company's Milwaukee office, nor will the Company be liable for any damages caused by defective materials, parts, machinery tools or equipment except for replacement of parts as above provided. The Company makes no warranties, expressed or implied, except that of title and those above stated.

LIMITATION OF LIABILITY

In no event shall the Company be liable for special or consequential damages claimed to arise under this contract, nor shall it be liable for any loss or damage sustained or caused by the operation and use of the equipment while any of the parts are loose, broken, or out of order, nor will the Company be liable in any manner if the equipment is improperly operated or its successful operation impaired by the natural elements after its delivery to the purchaser.

P.O 536-98624
Galv. Line
Acid Handling
Located outside
just North of Galv. Bldg.

Bill Bottomley
JAM
536-98624

only P&H parts
assure P&H performance

To:

Date: NOV 13 1968

U.S. STEEL CORPORATION
CONST. WAREHOUSE - FAIRFIELD WORKS
FAIRFIELD, ALABAMA

ATTN: T. H. WALKER

Hoist Cat. No. 333K224

Serial No. T-35566

P & H Order No. 309248

8 copies of Replacement Parts Manuals are enclosed for the following:

Purchaser J. B. Sales Co.
P. O. Box 1162
Pittsburgh, Pennsylvania 15230

Purchaser's Order No. 1443

Shipped To U.S. Steel Corporation
Construction Warehouse - Fairfield Works
Fairfield, Alabama
~~Attn: T.H. Walker~~

Capacity 12,000 Suspension M.G.T. Lift 26' - 0"

Voltage 460 Phase 3 Cycle 60

Motors P&H Control Two Speed Hoist & Soft Start Trolley

BRANCH OFFICE Pittsburgh
Birmingham

cc: W. F. Coffman - Pittsburgh Office
L. Gray - Birmingham Office
Birmingham Crane & Hoist W/Dealers Copy

W. E. Koshak
PARTS CATALOG DEPT. A.F.

HARNISCHFEGER P&H
Milwaukee, Wisconsin, U.S.A.

1300-1

USHO 002163

301028

☐ ENGINEERING AND PRODUCTION COPY

SOLD TO
J.B. Sales Company
P.O. Box 1162
Pittsburgh, Pa. 15230

SHIP TO
U.S. Steel Corporation
Construction Warehouse
Fairfield Works
Fairfield, Alabama

SPECIAL INSTRUCTIONS AND INFORMATION:
J. B. SALES CO.
MANUFACTURERS REPRESENTATIVE
P. O. BOX 1162
PITTSBURGH, PA. 15230
JACK BARNEY
PHONE (412) 391-3566

CUSTOMER ORDER NO.	PLEASE REFER TO OUR ORDER NO.
1443	321956

DATE ENTERED	SHIPMENT	VIA	SERIAL NO.
7-8-68	9-3-68	Truck	

PROPOSAL DATE	PROPOSAL NO.	F.O.B.	FREIGHT	SHIPPING WT.	DELIVERY TIME
		Milwaukee, Wis.	Collect		

TERMS
Net 30 Days

REPRESENTATIVE-DISTRICT	NO.	REPRESENTATIVE-DISTRICT	NO.	REPRESENTATIVE-DISTRICT	NO.	CUSTOMER NO.
Coffman-Pgh.	3/4	Gray-Birmingham	1/4			

DESCRIPTION	QUANTITY
The following for use with Hevi-Lift Hoist Serial #T-35566 on 309248. Complete messenger system for power and control including 35'-0" #14-10 Cond. control cord, 35'-0" #12 4 Cond. power cord, 3 trolleys to operate on 6" std. I beam and junction box. Towing arm being furnished on order 309248.	1

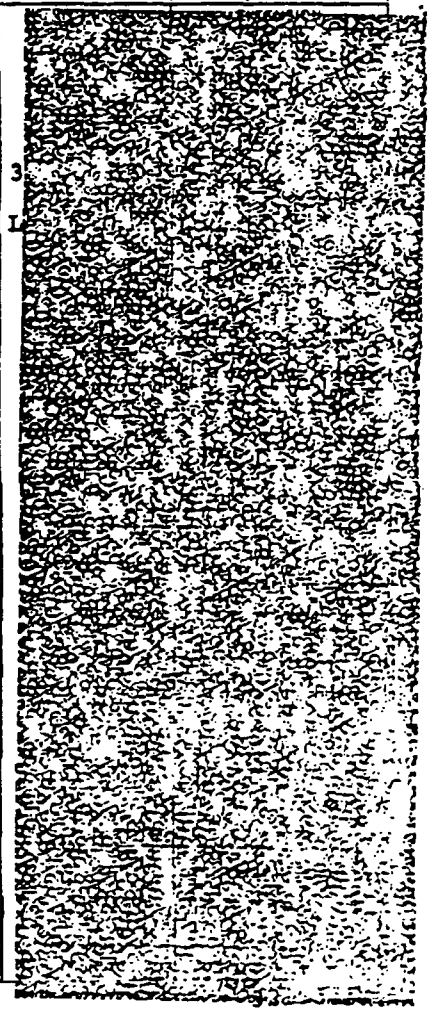

FORM
0-515

Form 0-821

USHO 002164

MISCELLANEOUS MATERIAL
- NOT ILLUSTRATED -

J. B. SALES CO.
MANUFACTURERS' REPRESENTATIVE
P. O. BOX [illegible]
PITTSBURGH, PA. 15230
[illegible]
PHONE (412) 391-3565

XX-1

REF.	PART NO.	DESCRIPTION	AMT.
		Serial No. 321956	
1	35' - 0" LG.	#14-10 CONDUCTOR TYPE SO CORD	1
2	35' - 0" LG.	#12-6 CONDUCTOR TYPE SO CORD	1
3	85Z24D9	CORD GRIPS	2
4	85Z24D10	CORD GRIPS	2
5	35' - 0" LG.	#2 MACH. CHAIN	1

P.O. 536-98624
#4 GALV. LINE
ACID HANDLING

JAM

only P&H parts
assure P&H performance

NOV 13 1968

To:

U.S. STEEL CORPORATION
CONST. WAREHOUSE - FAIRFIELD WORKS
FAIRFIELD, ALABAMA

ATTN: T. H. WALKER

Date:

Hoist Cat. No. 333K224

Serial No. T-35566

P & H Order No. 309248

8 **copies of Replacement Parts Manuals are enclosed for the following:**

Purchaser J. B. Sales Co.
P. O. Box 1162
Pittsburgh, Pennsylvania 15230

Purchaser's Order No. 1443

Shipped To U.S. Steel Corporation
Construction Warehouse - Fairfield Works
Fairfield, Alabama
~~Attn: T.H. Walker~~

Capacity 12,000 Suspension M.G.T. Lift 26' - 0"

Voltage 460 Phase 3 Cycle 60

Motors P&H Control Two Speed Hoist & Soft Start Trolley

BRANCH OFFICE Pittsburgh
Birmingham

cc: W. F. Coffman - Pittsburgh Office
L. Gray - Birmingham Office
Birmingham Crane & Hoist W/Dealers Copy

PARTS CATALOG DEPT.

HARNISCHFEGER P&H
Milwaukee, Wisconsin, U.S.A.

300-1

USHO 002166

GENERAL REPLACEMENT PARTS INFORMATION

FOR CRANE AND HEVI-LIFT

HOW TO ORDER REPLACEMENT PARTS

The parts book covers all replacements required for this P & H machine. To insure prompt service each repair parts order must contain the following information:

1. Machine Serial Number
2. Capacity
3. Part Number
4. Quantity
5. Description
6. Voltage, Phase and Cycle
7. Correct Shipping Destination

When orders for parts are sent directly to the HARNISCHFEGER CORPORATION they should be addressed as follows:

REPLACEMENT PARTS SALES DIVISION
HARNISCHFEGER CORPORATION
4400 W. National Avenue
Milwaukee 46, Wisconsin

Orders telephoned or telegraphed to us must be immediately confirmed by letter since we cannot assume responsibility for the correctness of the phone or telegraphic message.

MACHINE SERIAL NUMBERS

The crane serial numbers are found on front trolley side & front platform facing bridge machinery side.

The hoist serial numbers are located on the bottom of motor bracket and the large nameplate attached to the controller case cover.

Minimum Repair Parts Order Charge - $1.00

RETURN OF PARTS

HARNISCHFEGER CORPORATION will not accept return of any parts unless accompanied by a claim tag. These claim tags to be issued at the time authorization of such return is made. Tags must be attached to outside of package.

CLAIMS

All shipments are carefully inspected and are delivered to the carrier in good order. Upon receipt of shipment, caution should be exercised that there is no loss or damage.

If this should occur, refuse to accept shipment until the carrier makes the proper notation to that effect. In the event of concealed loss or damage, notify carrier immediately.

By following these suggestions, you will encounter less difficulty in collecting your claim.

INDEX FOR HEVI-LIFT HOIST

MECHANICAL SECTION T-35566	Illustration Number
Hoist Frame - Drum - Motor Support	HL-70A
Gear Case and Gearing	HL-71C
Gear Case Cover and Brake	HL-72B
Reeving Assembly	9307H101
Limit Switch Lever	———
Limit Switch Drive	———
Bottom Block and Hoist Cable	HL-84
Stabilizer Assembly	———
Yoke Assembly	HL-76
Plain Trolley	HL-31
Geared Trolley	T-7A
ELECTRICAL SECTION	
Hoist Motor	TBHM-1
Trolley Motor	HL-60
Bridge Motor	———
Limit Switch	HL-38A
Limit Switch Application	———
Rectifier	HL-63
Hoist Control	EC-4
Trolley Control	EC-4
Bridge Control	———
Additional Control	———
Hoist Resistor	———
Trolley Resistor	———
Bridge Resistor	———
Push Button Station	HL-50A
Collectors	———
Wiring Diagram	101E5665
CARE AND OPERATION SECTION	
Lubrication and Maintenance Instructions	T-100

HARNISCHFEGER P&H
Milwaukee, Wisconsin

USHO 002168

RS-1246-1

ILLUSTRATION HL-70A
HOIST FRAME, DRUM & MOTOR BRACKET

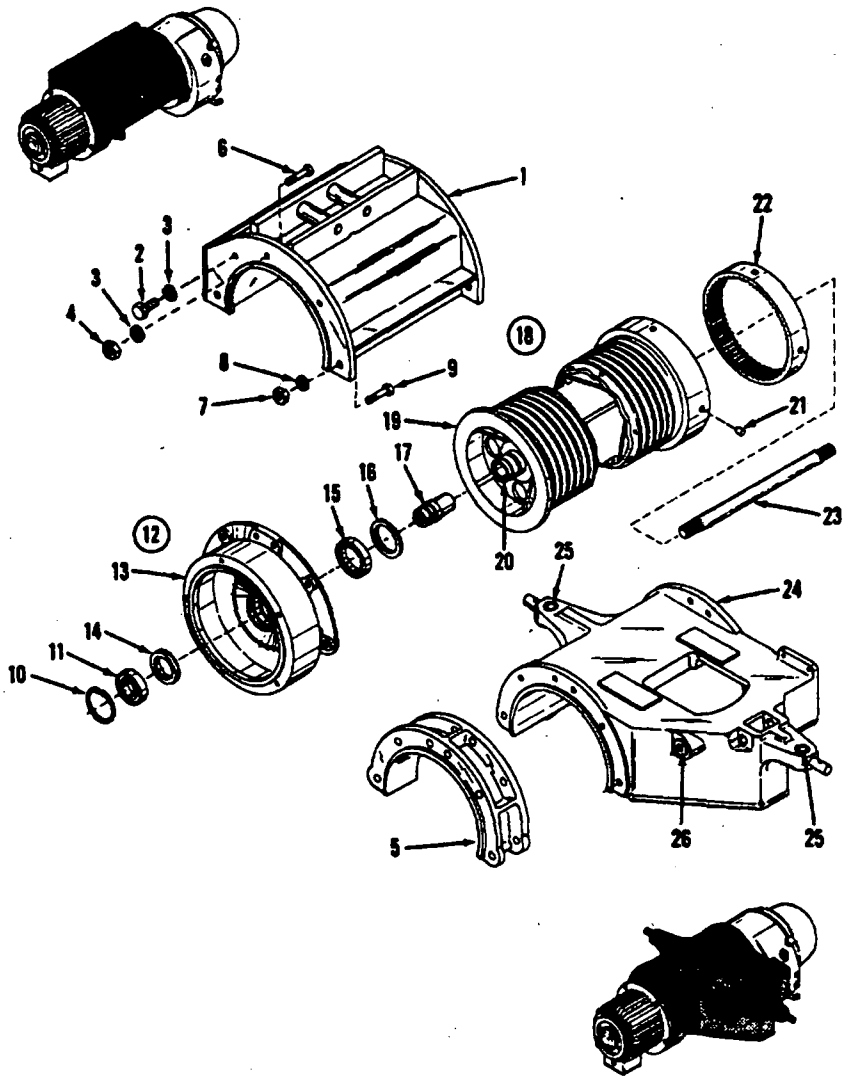

REV. 7-59

ILLUSTRATION HL-70A-25

HOIST FRAME - DRUM - MOTOR BRACKET

REF.	PART NO.	DESCRIPTION	AMT.
		HOIST T-35566	
1	329E1259	DRUM HANGER	1-
2	0626V042	SCREW - HEX HD CAP 3/8 IN - 16 X 1-1/4 IN	2
3	3616V009	LOCKWASHER - 3/8 IN	6
4	2045V003	NUT - HEX - 3/8 IN - 16	2
5		NOT USED	
6	0626V044	BOLT - HEX HD. MACH. 3/8 IN - 16 X 1-3/4 IN	2
7	2045V007	NUT - HEX - 5/8 IN - 11	4
8	3615V013	LOCKWASHER - 5/8 IN	4
9	0626V116	BOLT-HEX HD MACH. 5/8 IN - 11 X 2 FT 14 IN	4
10	18Z2D19	SNAP RING	1
11	25Z24608	BEARING - BALL	1
12	3100F792-2	MOTOR SUPPORT ASSEMBLY	1-
		CONSISTS OF REF 13 THRU 16	
13	316E1163	MOTOR SUPPORT ONLY	1-
14	18F681D362	OIL SEAL	1
15	25Z531D6	BEARING - ROLLER	1
16	18F681D363	OIL SEAL	1
17	318H1900	COUPLING	1
18	9323E32-8	DRUM ASSEMBLY	1-
		CONSIST OF REF 19 THRU 22	
19	323E561	DRUM ONLY	1-
20	318H2000	DRUM SLEEVE	2
21	19F790222	DOWEL	4
22	301F856D2	GEAR	1
23	310F933	DRUM SHAFT	1-
		REF 24-25-26 NOT USED	
27	318H2201	FILLER PLATES - NOT SHOWN	4-
28	329F2204	TOW BAR - SEE DRAWING	1-
		3100E1872-279	

		DESCRIPTION	MATERIAL		PART NO.		WGT.	
			PSN NO.		SEMI-FIN.	PART NO.		
	1	PL 5" x 5/8" x 0'-7"	139					
	1	L 4"@7.25" x 3'-10" LG.	139					

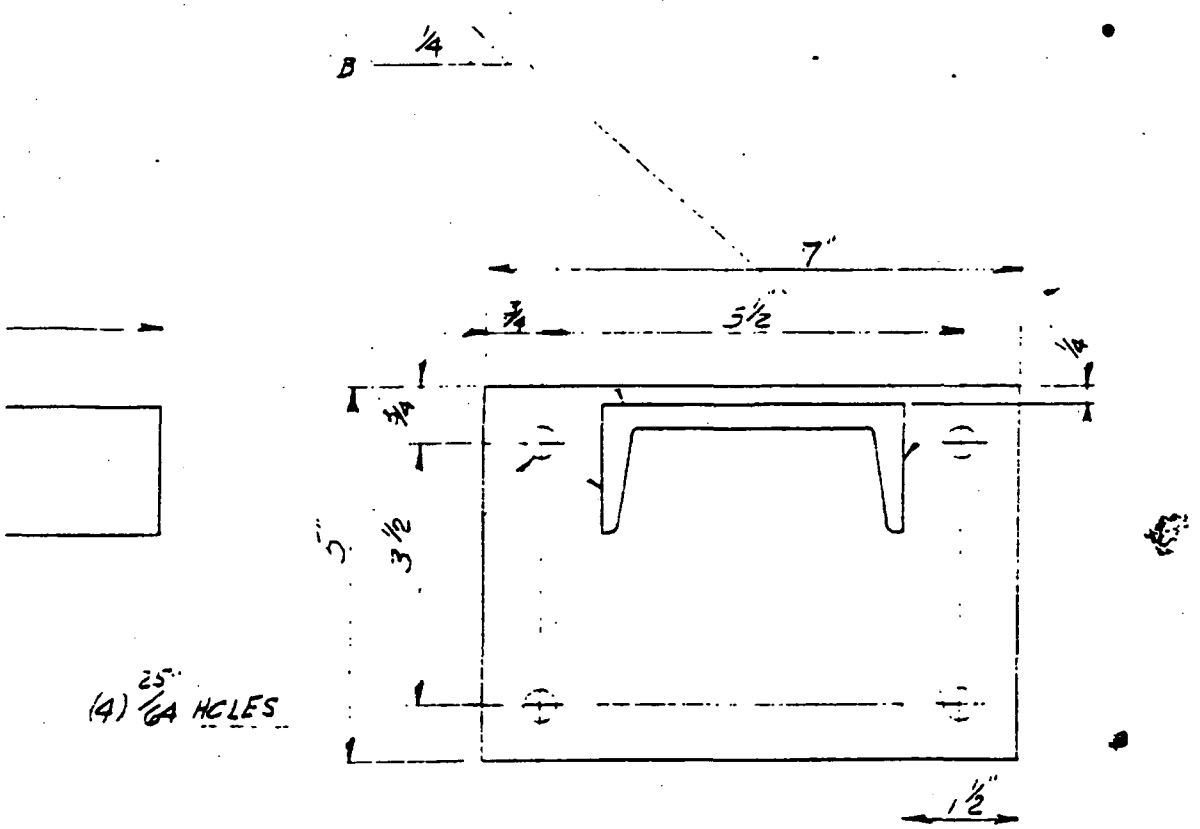

NOTE:

WELD ON "S" HOOK TO SUIT FOR TOW CHAIN IN ASSEM.

USHO 002171

CHANGE	NAME & DATE	SURFACE ROUGHNESS NOTE			PART NO.	HEAT TREATMENT OR PROCESSING SPECIFICATIONS 309 dy		
		SURFACE MARKED THUS V MUST BE WITHIN A ROUGHNESS VALUE OF 250 MICROINCHES UNLESS OTHERWISE SPECIFIED			SCALE 6"=1'-0"	DATE 8-12-68	BASIC LIST NO.	SIMILAR TO
		GENERAL TOLERANCE NOTES UNLESS OTHERWISE SPECIFIED			DR. BY MR	HARNISCHFEGER P&H Milwaukee, Wisconsin, U.S.A.		
		STRUCTURAL	MACHINING		TR. BY	TITLE TOW BAR		
		±1/16"	±.015"		CH. BY	PROD. OR MODEL TYPE 3CG HOIST		
		ESTIMATED WEIGHTS			APP. BY CH. ENG. WED	DWG. NO. 329F2204		
		RGH.	FIN.					
		REPETITIVE	NON-REPETITIVE	SUFFIX NO.	NAME DATE	PROC. BY		

ILLUSTRATION HL-71C

GEAR CASE AND GEARING-LOAD BRAKE

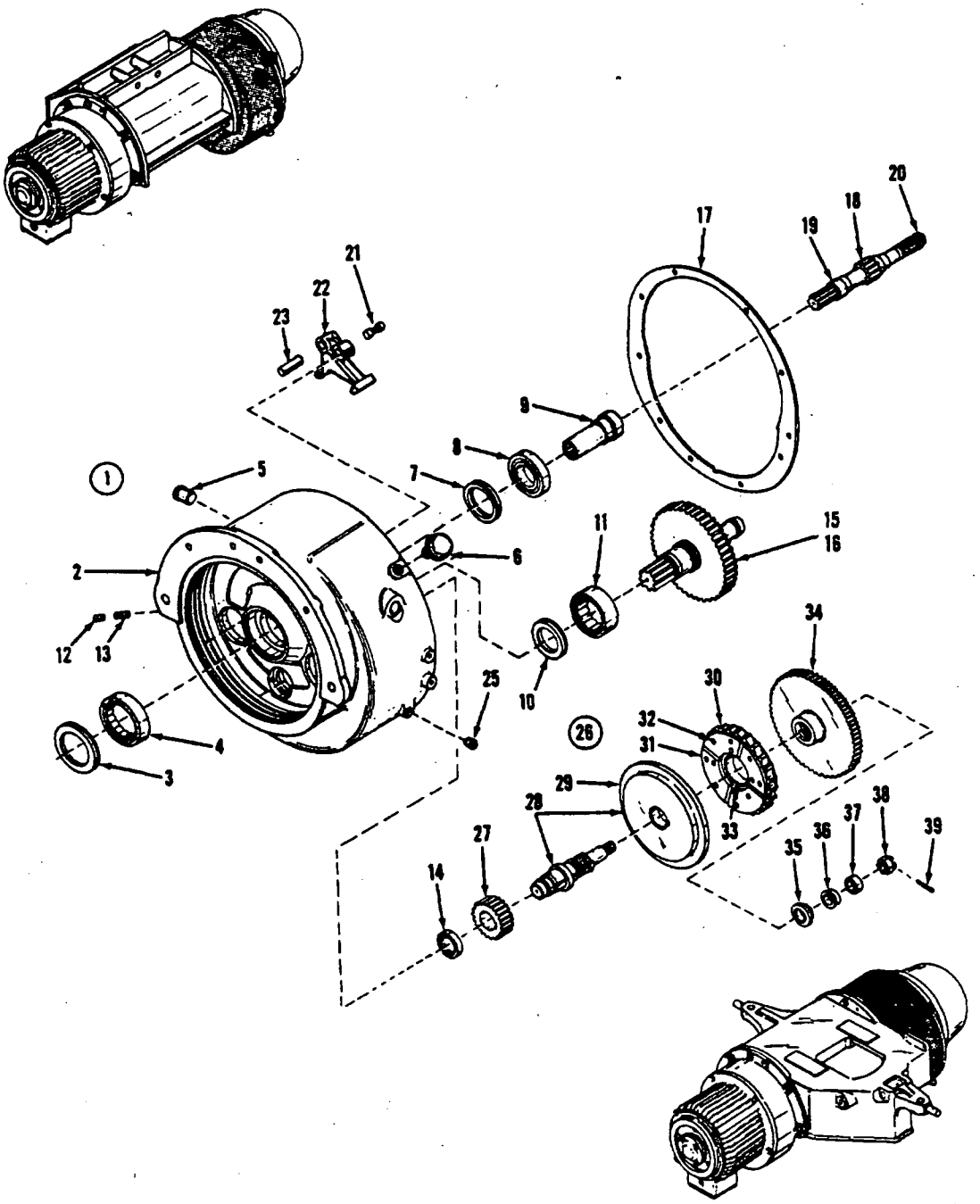

HARNISCHFEGER P&H
Milwaukee 46, Wisconsin, U.S.A.

USHO 002172

WHEN ORDERING PARTS ALWAYS GIVE MODEL AND MACHINE SERIAL NUMBER

9307H101-F1

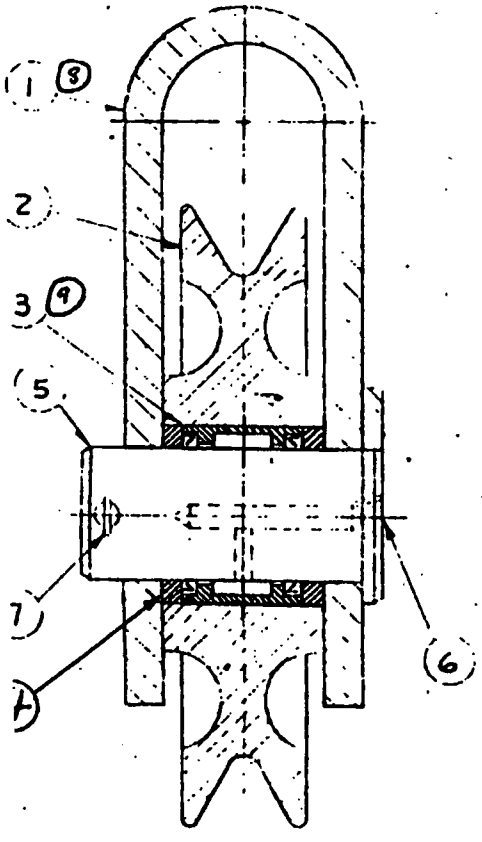

BILL OF MATERIAL

NO. REQUIRED	DESCRIPTION	MAT. P&H NO.	PART SEMI-FIN	PART NO	WGT. #	ITEM NO
1	LINK		318H2066			1
1	SHEAVE		307H54			2
1	BEARING (SJ 7315-SS)		25Z572-D10			3
2	SPACER		318H2067			4
1	PIN		319H1337			5
1	IAN FITTING		44Z1-D12			6
1	COTTER PIN 5/16 X 2 1/2" LG.					7
~~1~~	~~LINK~~		~~318H2065~~			
~~1~~	~~BEARING (SJ 7316)~~		~~25Z100-D37~~			
						10
						11

F1 C5/16 . (ST'D) SEALED BEARING W/LIP TURNED OUTWARD W/ GREASE FITTING

~~F2 D6 (STD) SEALED BEARING W/LIP TURNED OUTWARD W/GREASE FITTING~~

~~F3 C5/8 (SPECIAL) OPEN BEARING W/ GREASE FITTING~~

~~F4 D6 (SPECIAL) OPEN BEARING W/ GREASE FITTING~~

USHO 002173

CHANGE MARK	CHANGE	NAME & DATE
A		

SURFACE ROUGHNESS NOTE

SURFACE MARKED THUS √ MUST BE WITHIN A ROUGHNESS VALUE OF 250 MICROINCHES UNLESS OTHERWISE SPECIFIED

GENERAL TOLERANCE NOTES UNLESS OTHERWISE SPECIFIED

STRUCTURAL	MACHINING
±1/16"	±.015"

ESTIMATED WEIGHTS

RGH.	FIN.

X REPETITIVE ___ NON-REPETITIVE

SUFFIX NO. | NAME | DATE

PART NO.

SCALE 1/4"

DR. BY

TR. BY

CH. BY

APP. BY CH. ENG. NEO

PROC. BY JB

HEAT TREATMENT OR PROCESSING SPECIFICATIONS

DATE	BASIC LIST NO.	SIMILAR TO
		9307H61

HARNISCHFEGER P&H
Milwaukee, Wisconsin, U.S.A.

TITLE

PROD. OR MODEL

DWG. NO. 9307H101-F1

ILLUSTRATION HL-71C-46

GEAR CASE & GEARING - LOAD BRAKE

REF.	PART NO.	DESCRIPTION	AMT.
		HOIST T-35566	
1	3100E1474-1	GEAR CASE ASSEMBLY	1-
		CONSISTS OF REF 2 THRU 14	
2	3144104	GEAR CASE	1-
3	18F6810363	OIL SEAL	1
4	25Z5310D6	BEARING	1
5		NOT USED	
6	46Z4	BREATHER	1
7	18F6810362	OIL SEAL	1
8	25Z2460D8	BEARING - BALL	1
9	318H1901	COUPLING	1
	45Z91-D120	W/ O RING	1
10	18F6820298	OIL SEAL DRUM PINION SHAFTS	2
11	25Z113D4	BEARING - ROLLER - DRUM PINION SHAFTS	2
12	20Z931D1	SET SCREW - NYLOCK - 3/8X1/2 IN	1
13		SET SCREW - 3/8X1/2 IN	1
14	25Z102D2	BEARING - ROLLER - LOAD BRAKE SHAFT	1
15	9310F108-3	R. H. DRUM PINION SHAFT ASSEMBLY	1
16	9310F108-4	L. H. DRUM PINION SHAFT ASSEMBLY	1
17	320F84	GASKET	1
18	301F852F2	MOTOR PINION SHAFT - INCL. REF. 19	1
19	318H2288	COLLAR	1
20	18Z202	RETAINER RING	1
21	9318H31F1	LOAD BRAKE SPRING CAP ASSEMBLY	1
22	315H164	LOAD BRAKE PAWL	1
23	19Z138D48	PAWL PIN	1
24		NOT USED	
25	2423V001	PLUG - PIPE 1/8 IN	1
26	9310F169-2	LOAD BRAKE SHAFT ASSEMBLY	1
		CONSISTS OF REF 27 THRU 39	
27	301H580	INTERMEDIATE PINION	1
28	9310F166-6	LOAD BRAKE SHAFT & FLANGE - INCL REF 29	1
29		NOT FURNISHED SEPARATELY	
30	9313F52F1	RATCHET ASSEMBLY-INCL. REF. 31-32-33	1
31	315H147	FRICTION DISC	2
32	20H1660D8	RIVET	4
33	313F845	RATCHET	1
	5Z254	BUSHING	1
34	301F853	MOTOR GEAR	1
35	318H2001	SPACER	1
36	25Z528D2	INNER RACE	1
37	25Z101D2	INNER RACE	1
38	9/16 IN-18 NF	SLOTTED HEX NUT HEAVY SEMI FINISHED	1
39	2201V035	COTTER PIN - 1/8 IN X 1-1/4 IN	1
		3100E1872-279	

ILLUSTRATION HL-72B
GEAR CASE COVER AND BRAKE

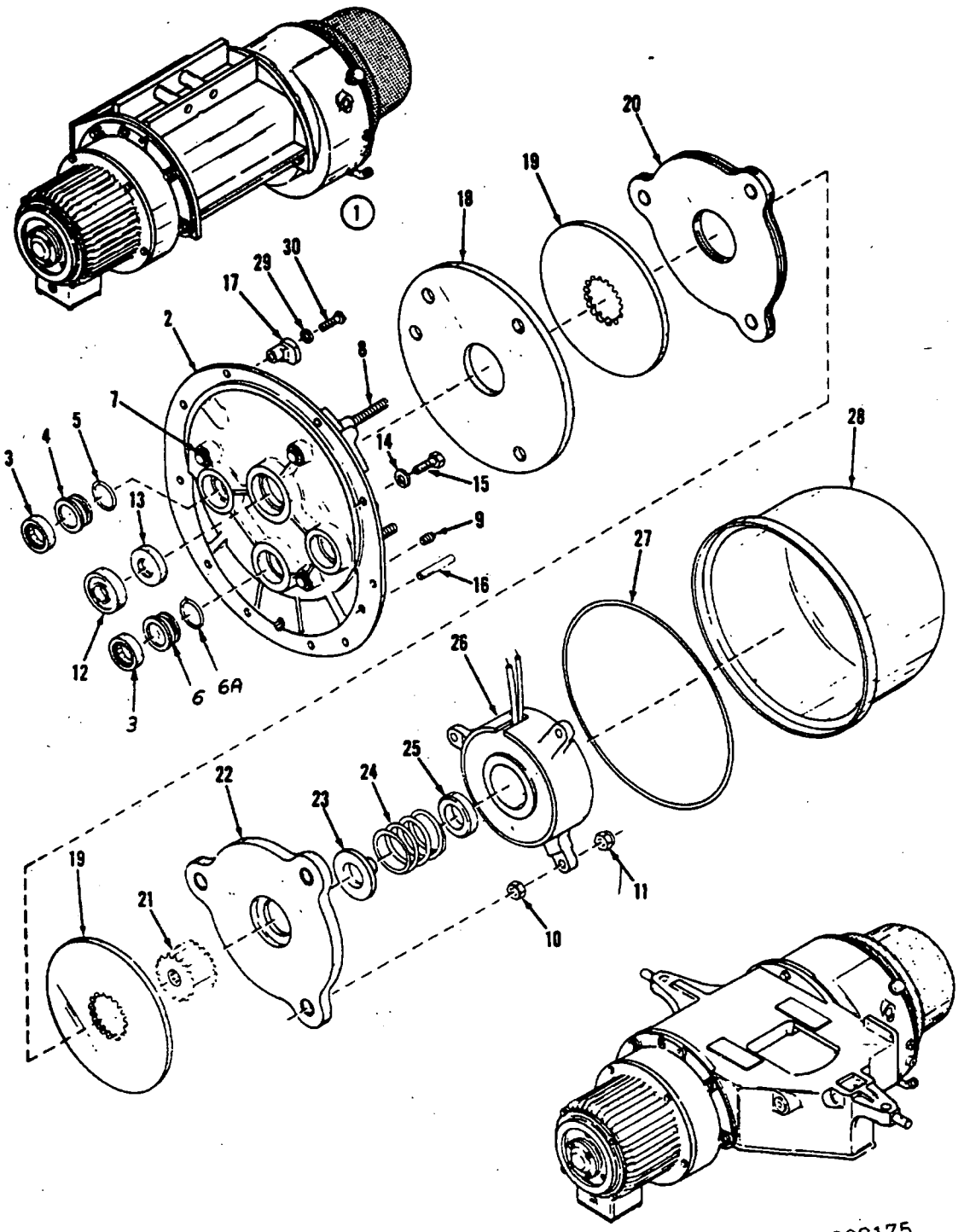

USHO 002175

ILLUSTRATION HL72B-8

GEAR CASE COVER & BRAKE

REF.	PART NO.	DESCRIPTION	AMT.
		HOIST T-35566	
1	9314E84F1	GEAR CASE COVER ASSEMBLY	1
		CONSISTS OF REF 2 THRU 11 & 13	
2	314E765	GEAR CASE COVER	1
3	25Z10202	BEARING - ROLLER	3
4		NOT USED	
5		NOT USED	
6	325H187	BEARING CAP	1
	45Z91033	W/ O RING	1
7	18Z2052	RETAINER RING	1
8	319F4	PIN	3
9	2423V002	PLUG - 1/4 IN PIPE	1
10	2045V003	NUT - HEX - 3/8 IN - 16	3
11	2045V003	NUT - HEX - 3/8 IN - 16	3
12	25T81603	BEARING - BALL	1
13	18F6820302	OIL SEAL	1
14	3616V009	LOCKWASHER - 3/8 IN	10
15	0626V042	SCREW - HEX HD. CAP 3/8 IN - 16 X 1-1/4 IN	10
16	19F79045	PIN	1
17	306H308	LATCH - BRAKE COVER	4
18	315F135	BACK PLATE	1
19	315F112	REVOLVING DISC	2
20	315F136	DISC PLATE	1
21	313F488	DISC HUB	1
22	81E43	ARMATURE	1
23	18H5747	SPRING GUIDE	1
24	17Z146D1	SPRING	1
25	18H5724D22	SPACER	1
26	981E46-2	SOLENOID POT ASSEMBLY - INCL COIL	1
27		GASKET - HALF ROUND NEOPRENE	
		STRIP - 1/4 X 1/8 X 38 IN	1
28	314F356	BRAKE COVER	1
29	3616V007	LOCKWASHER - 1/4 IN	4
30	0746V117	SLOTTED HEX HD SCREW - 1/4 X 1-1/2 IN	4
		3100E1872-279	

ILLUSTRATION HL-84
BOTTOM BLOCK ASSEMBLY

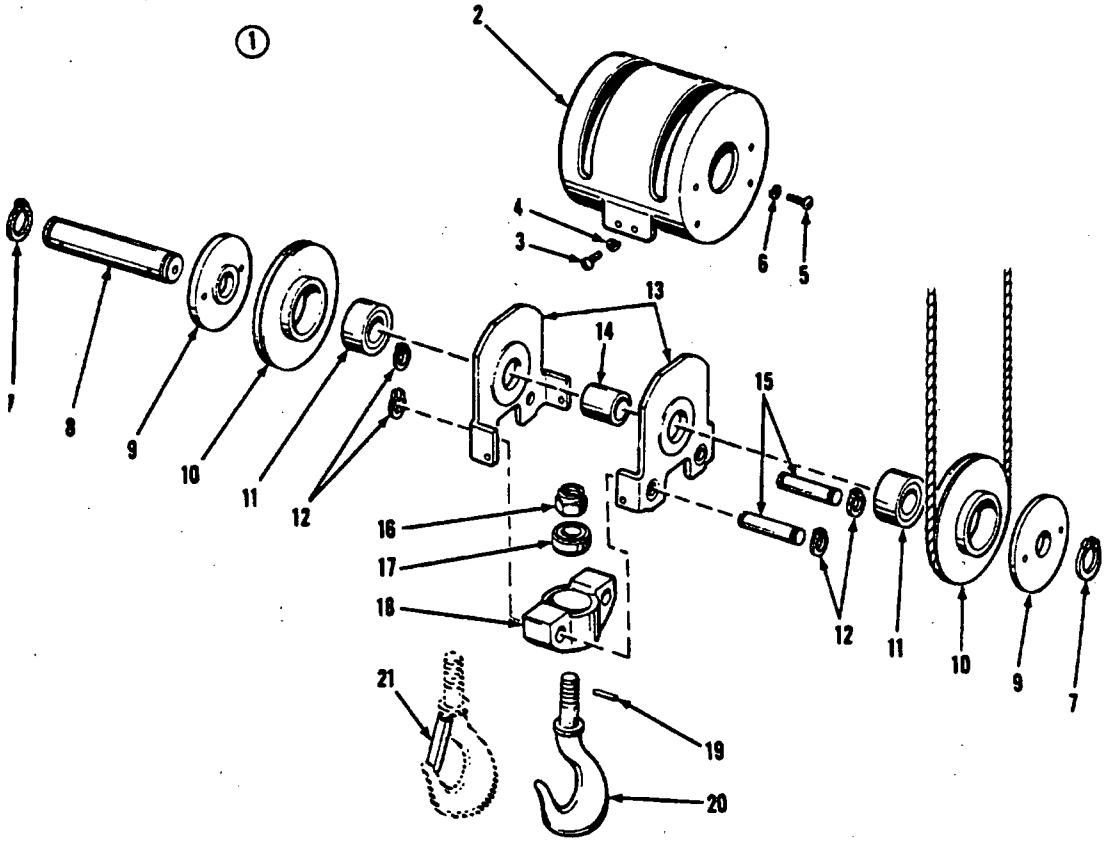

HARNISCHFEGER P&H PARTS DIVISION
Milwaukee, Wisconsin 53246

USHO 002177

ILLUSTRATION HL-84-3

BOTTOM BLOCK ASSEMBLY

REF.	PART NO.	DESCRIPTION	AMT.
		HOIST T-35566	
1	3100E1395-1	BOTTOM BLOCK ASSEMBLY - W/ STANDARD HOOK CONSISTS OF REF 2 THRU 20	1
	3100E1395-2	BOTTOM BLOCK ASSEMBLY - W/ SAFETY HOOK CONSISTS OF REF 2 THRU 21	1
2	314E804	SHEAVE GUARD	1
3	0860V107	RD HD MACHINE SCREW - 1/4-20 X 3/8 IN	4
4	18H414609	SHAKEPROOF LOCKWASHER - 1/4 IN	4
5	0860V109	RD HD MACHINE SCREW - 1/4-20 X 1/2 IN	4
6	18H4146D9	SHAKEPROOF LOCKWASHER - 1/4 IN	4
7	18Z2D240	SNAP RING	2
8	319F33F2	PIN	1
9	318H2392	END PLATE	2
10	307F229C1	SHEAVE	2
11	25Z372051	ROLLER BEARING	2
12	18Z2D237	SNAP RING	4
13	9308E8F1	SIDE PLATE ASSEMBLY	2
14	318H2395	SPACER	1
15	319H1260	PIN	2
16	2073V012	NUT - FINISHED HEX - 1-1/4 IN	1
17	25Z338D39	BEARING	1
18	308F571	CROSS HEAD	1
19	19Z80130	ROLL PIN	1
20	308F566	HOOK	1
21	8Z64D19	SAFETY LATCH KIT	1
22	9308F41-7	CABLE ASSEMBLY	1-

ILLUSTRATION HL-76
YOKE ASSEMBLIES AND LOAD BAR

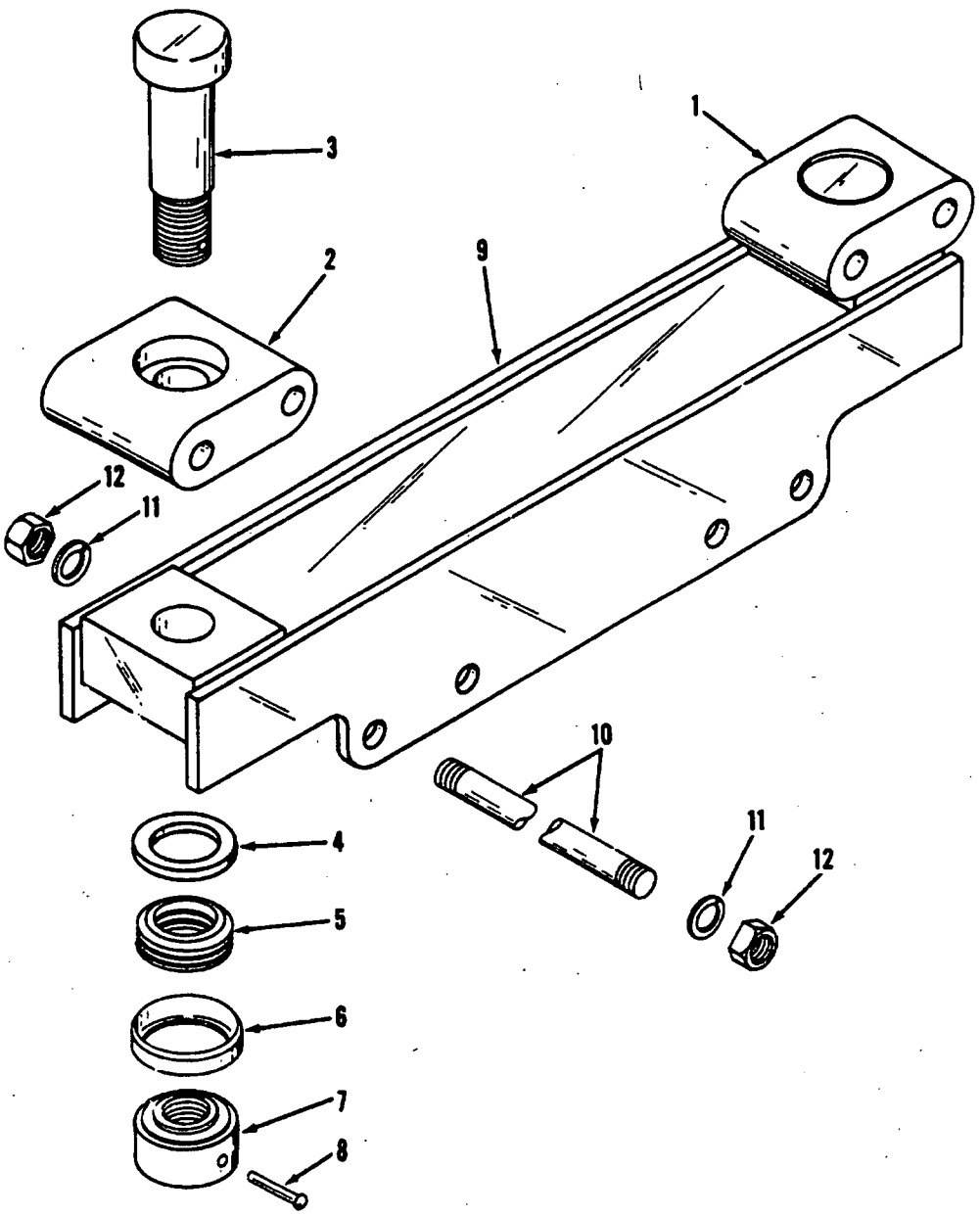

ILLUSTRATION HL-76-3

YOKE ASSEMBLIES & LOAD BAR

REF.	PART NO.	DESCRIPTION	AMT.
		HOISY T-35566	
1	L.9316H10-1	YOKE ASSEMBLY	2
		EACH CONSISTS OF REF. 2 THRU 8	
2	316H96	YOKE	1
3	319H426	KING PIN	1
4	18Z261D11	WASHER	1
5	25Z240D11	THRUST BEARING	1
6	308H12	CAGE	1
7	320H708	NUT	1
8	2513V178	RIVET - RD. HD. - 3/8 IN. X 6 IN.	
9	316E1487	LOAD BAR	1-
10	320H685D1	ROD BOLTS	4-
11	3615V017	LOCKWASHERS	8-
12	2045V010	HEX NUTS	8-

ILLUSTRATION HL-31

4 WHEEL PLAIN TROLLEY

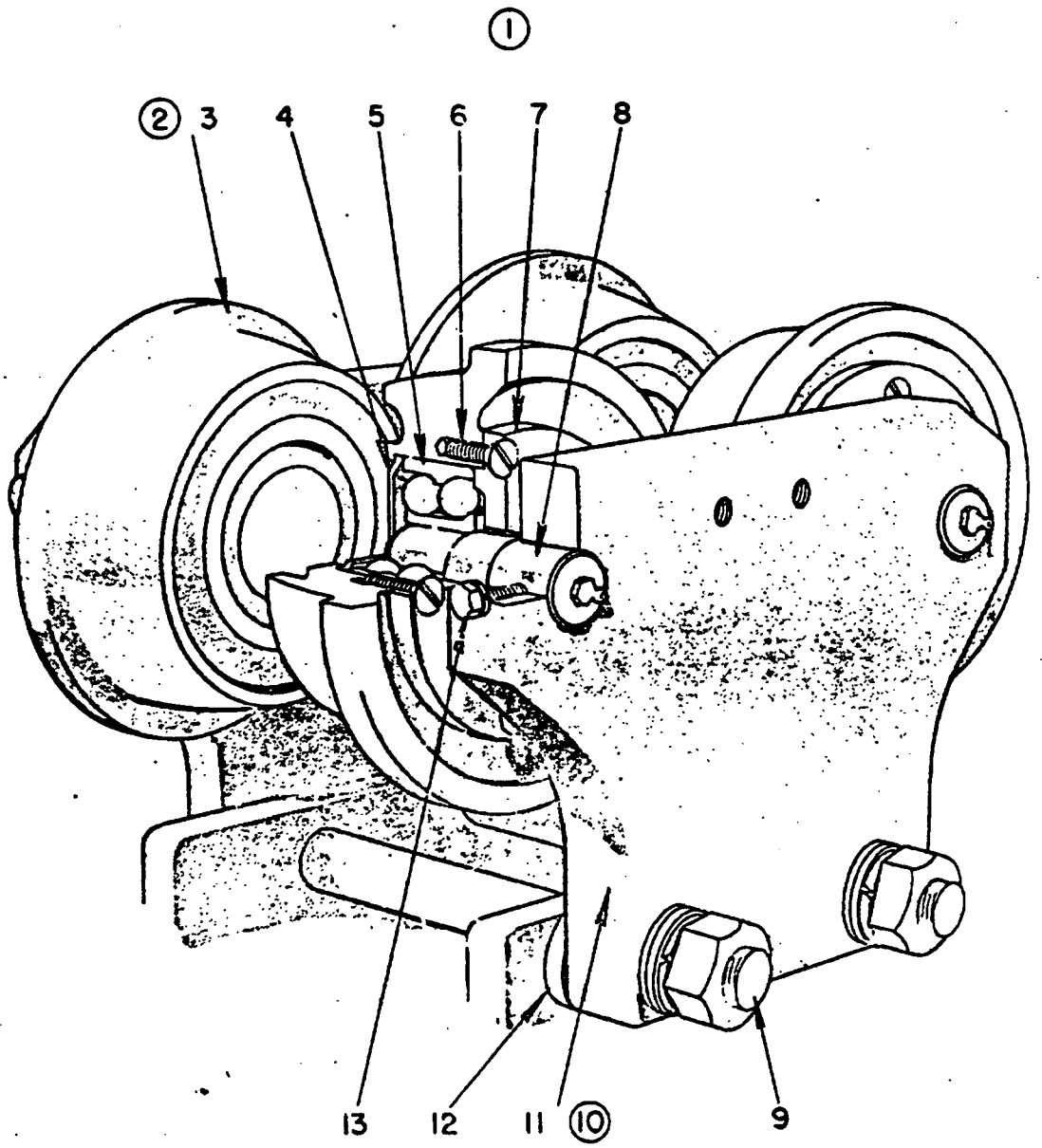

USHO 002181

ILLUSTRATION HL-31-4

4 WHEEL PLAIN TROLLEY

REF.	PART NO.	DESCRIPTION	AMT.
		HOIST T-35566	
1	3100E1065-4	4 WHEEL PLAIN TROLLEY ASSEMBLY INCLUDES NOS. 2-13	1-
2	9313F5-1	PLAIN TRUCK WHEEL ASSEMBLY INCLUDES NOS. 3-8	4
3	313F120	TRUCK WHEEL	4
4	318H226	CUP WASHER	4
5	25T83005	BALL BEARING	4
6	0644V113	FLAT HD. MACH. SCREW 5/16X5/8 IN.	16
	18H414809	W/ SHAKEPROOF LOCKWASHER 5/16 IN.	16
7	318H671	RETAINER WASHER	4
8	310H145	AXLE	4
	44Z1D28	W/ GREASE FITTING 1/8 IN.	4
9	320H686D8	ROD BOLTS	2-
	2001V013	W/ HEX. NUTS 1-3/8 IN.	4
	3615V020	LOCKWASHERS 1-3/8 IN.	4
10		NOT REQUIRED	
11	322E267	TRUCK SIDES	2-
	0626V079	W/ HEX. HD. CAP SCREW 1/2X1-1/2 IN.	4
	3615V011	LOCKWASHERS 1/2 IN.	4
	3612V005	PUNCHWASHERS 7/16 IN. ITEM 13	4
12	318H2204	FILLER PLATES	2-
13	320H96	CAPSCREW 7/8 IN. HEX.	4
	3615V013	W/ LOCKWASHER 5/8 IN.	4

ILLUSTRATION T-7A
SINGLE SPEED TROLLEY
(DRAG BRAKE)

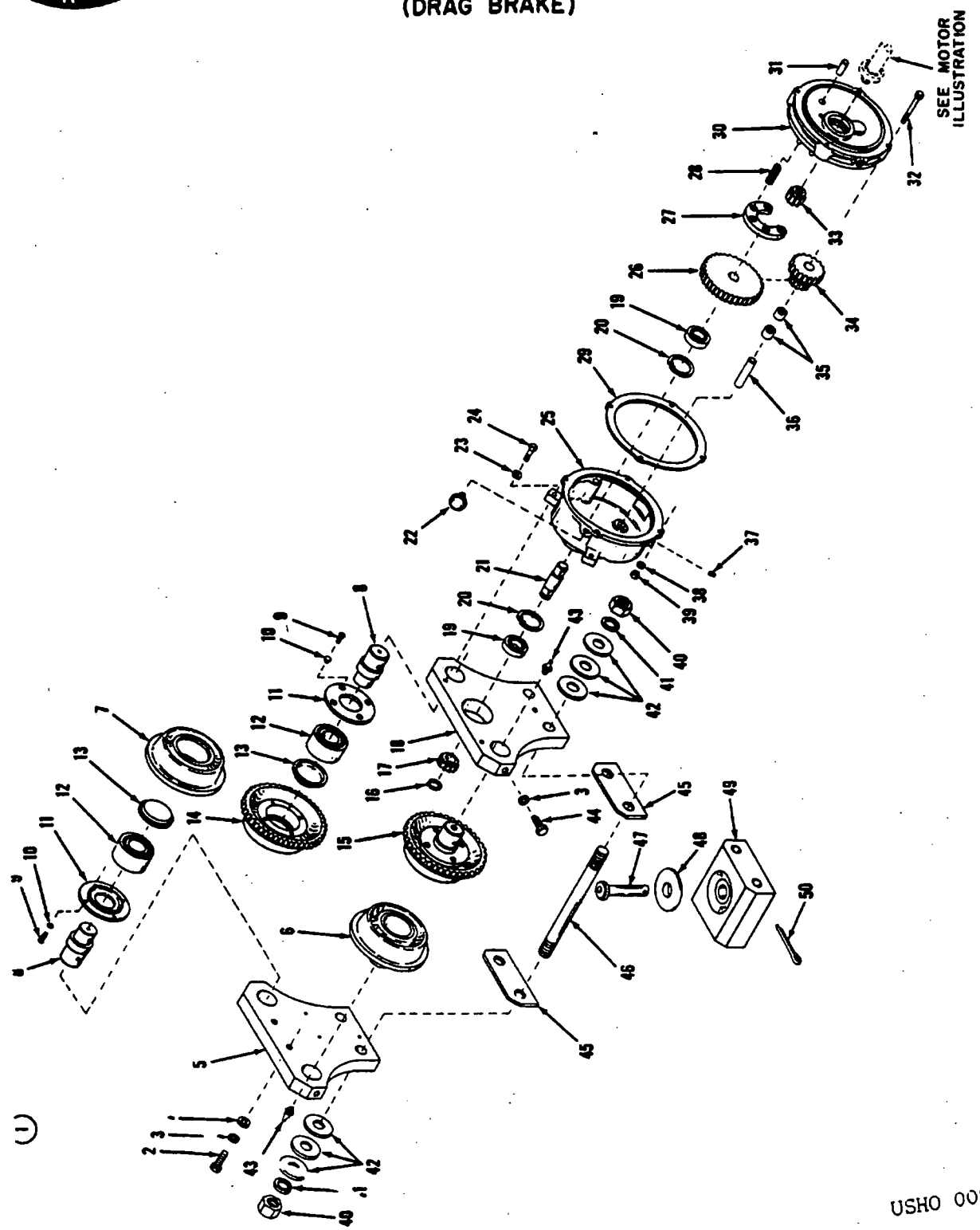

ILLUSTRATION T-7A-5

SINGLE SPEED TROLLEY ASSEMBLY

REF.	PART NO.	DESCRIPTION	AMT.
		HOIST T-35566	
1	3100A562-4	GEARED TROLLEY ASSEMBLY CONSISTS OF REF 2 THRU 26	1-
2		NOT USED	
3		NOT USED	
4		NOT USED	
5	322E267	TRUCK SIDE - PLAIN	1
6	L 9313F5-1	TRUCK WHEEL ASSEMBLY - PLAIN EACH INCLUDES REF 7 THRU 13	2
7	313F120	TRUCK WHEEL PLAIN	1
8	310H145	AXLE	1
9	0644V113	FLAT HEAD MACHINE SCREW 5/16 IN 18 X 5/8	4
10	18H4148D9	LOCKWSHERS - 5/16 IN SHAKEPROOF	4
11	318H671	RETAINER RING	1
12	25T830D5	DOUBLE ROW BALL BEARING	2
13	318H226	CUP WASHER	1
14	313F121	TRUCK WHEEL - GEARED	2
15	9313F6-1	TRUCK WHEEL ASSEMBLY - GEARED EACH INCLUDES REF 8 THRU 14	2
16	18Z2D53	RETAINER RING	1
17	301F1070	TRUCK PINION	1
18	322E268	TRUCK SIDE - MOTOR	1
19	25T817D3	BALL BEARING	1
20	18Z2D51	RETAINER RING	1
21	310H425F1	TRUCK PINION SHAFT	1
22	46Z4	BREATHER	1
23	3616V009	LOCKWASHER 3/8 IN	3
24	0626V043	CAP SCREW 3/8 IN 16 X 1-1/2 IN	3
25	314E545	GEAR CASE	1
26	301F901	INTERMEDIATE - GEAR	1
27	315F107	FRICTION DISC	1
28	317H148	SPRING	6
29	320F76	GASKET	1
30	314E578F1	GEAR CASE COVER	1
31	19F790134	DOWEL PIN	2
32	0609V031	MACHINE BOLT 5/16 IN - 18 X 1-1/4 IN	5
33	310F898	MOTOR PINION	1-
34	301F798	PLANETARY PINION	1-
35	25Z28008	NEEDLE BEARING	2
36	19Z118	DOWEL PIN	1
37	2423V002	PIPE PLUG 1/4 IN	1
38	3616V008	LOCKWASHER 5/16 IN	5
39	2045V002	HEX NUTS 5/16 IN	5
40	2001V013	HEX NUTS 1-3/8 IN	4
41	3615V020	LOCKWASHER 1-3/8 IN	4
42		NOT USED	
43	44Z1028	GREASE FITTING	4
44	320H96	CAP SCREW	4
45	318H2204	FILLER PLATES	2-
46	320H686D14	ROD BOLTS	2-
		REF 47 THRU 50 NOT REQUIRED	

ILLUSTRATION TBHM-1
HEH 256 RX HOIST MOTOR

①

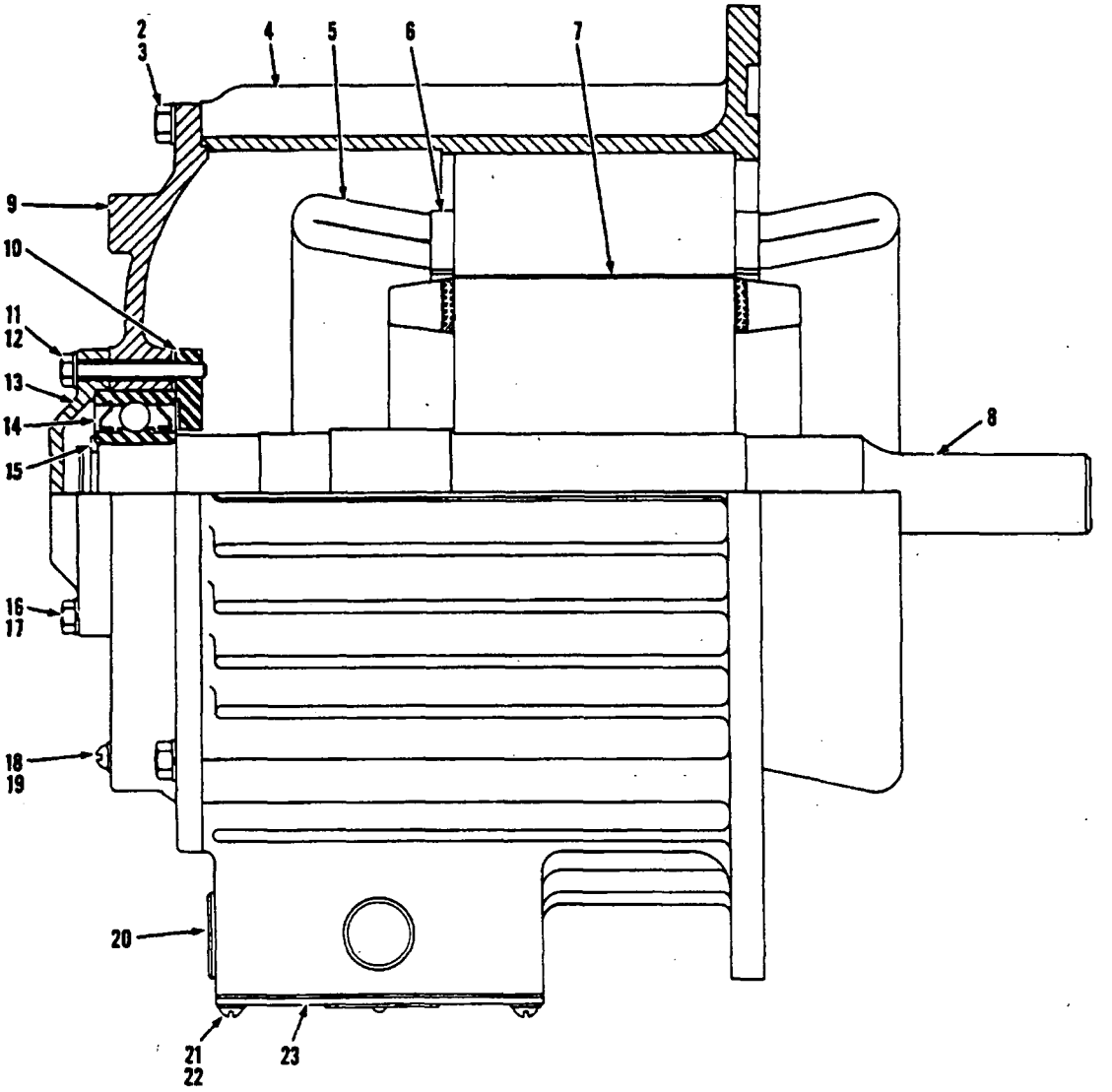

HARNISCHFEGER P&H PARTS DIVISION
Milwaukee, Wisconsin 53246

WHEN ORDERING PARTS ALWAYS GIVE MODEL AND MACHINE SERIAL NUMBER

ILLUSTRATION T8HM-1-3

HEH 256RX HOIST MOTOR

REF.	PART NO.	DESCRIPTION	AMT.
		HOIST T-35566	
1	215004-18	HEH 256RX 6-2 H.P. MOTOR 460 VOLT 3 PHASE 60 CYCLE CLASS F D&B #MPS 174	1-
2	0826V023	HEX HD CAPSCREW - 5/16 IN-18 - 1 IN LG	4
3	3616V008	LOCKWASHER - 5/16 IN	4
4	130201-6	STATOR ASSEMBLY - INCL REF 5 & 6	1
5	98393-27	SET STATOR COILS	1
6	102752-2	SET STATOR SLOT INSULATION	1
7	9569F7-2	ROTOR ASSEMBLY - INCL REF 8	1
8	510F1581F1	ROTOR SHAFT ASSEMBLY	1
	20H1396D11	INCL KEY - 7/16 IN X 7/16 IN X 4-3/4 IN	1
9	572E1132	FRONT HEAD	1
10	525F113	BEARING RETAINER	1
11	0826V006	HEX HD CAPSCREW - 1/4 IN-20 X 1 IN LG	2
12	3616V007	LOCKWASHER - 1/4 IN	2
13	525F20	BEARING CAP	1
14	25T856D5	BEARING	1
15	1822058	SNAP RING	1
16	0826V010	HEX HD CAPSCREW - 1/4 IN - 20 X 2 IN LG	2
17	3616V007	LOCKWASHER - 1/4 IN	2
18	0860V124	RD HD MACH SCREW - 5/16 IN-18 X 3/8 IN LG	4
19	3616V008	LOCKWASHER - 5/16 IN	4
20	2421V006	PIPE PLUG CTSK. HD - 1 IN - 11-1/2	1
21	0860V111	RD HD MACH SCREW - 1/4 IN - 20 X 5/8 IN	4
22	3616V007	LOCKWASHER - 1/4 IN	4
23	514H420	COVER PLATE	1

ILLUSTRATION HL-60

TYPE AM SINGLE SPEED MOTOR

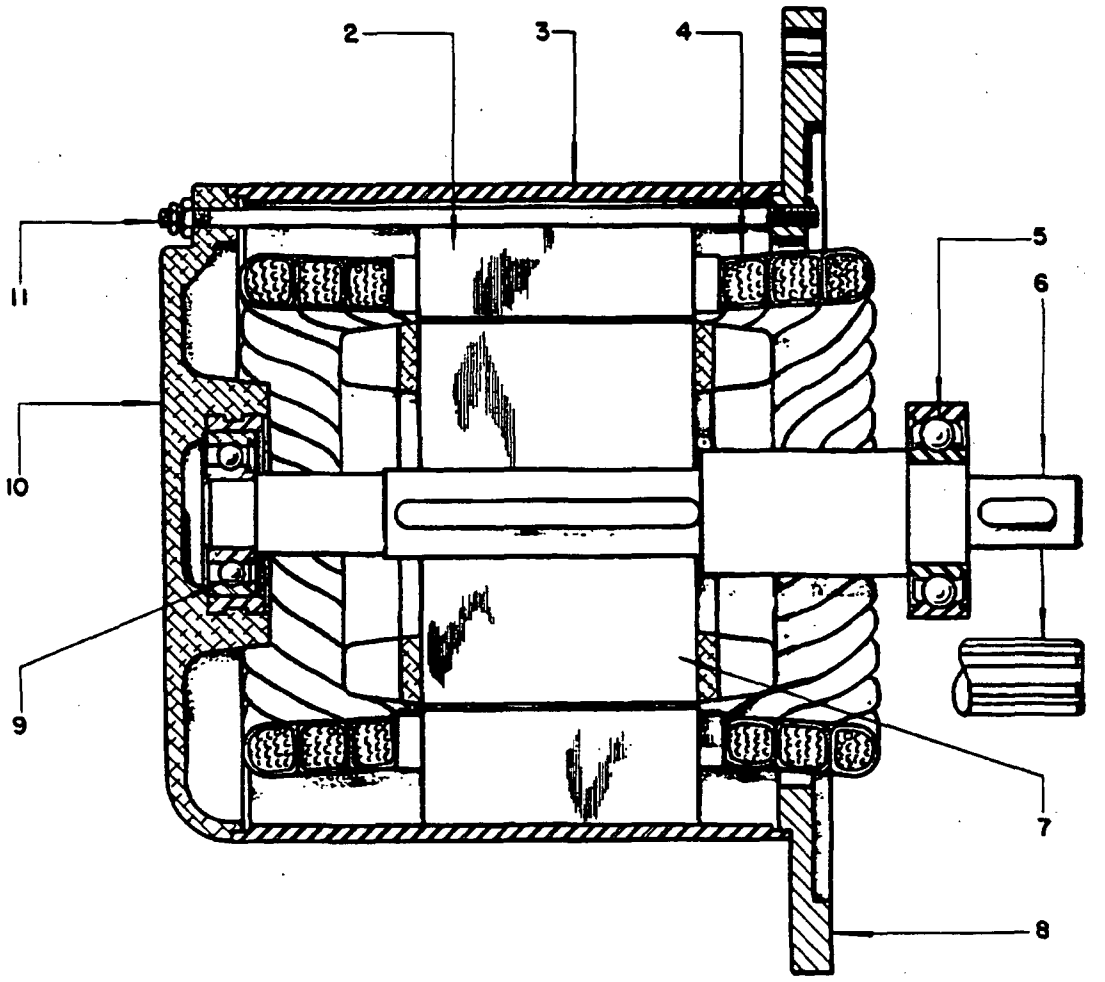

ILLUSTRATION HL-60-42

A C MOTOR

REF.	PART NO.	DESCRIPTION	AMT.
		HOIST T-35566	
1	67357-98	AM-13 1 H.P. MOTOR	1-
		230/460 VOLT 3 PHASE 60 CYCLE	
	67357-98	CLASS F D6B #MPS 174	1-
2	68211-46	STATOR ASSEMBLY	1-
		INCLUDES REF. 4	
3		NOT FURNISHED SEPARATELY	
4	84501-44	SET STATOR COILS	1-
	54301-2	SET SLOT INSULATION	1
5		NOT USED	
6	510F1429F1	ROTOR SHAFT	1
7	61578-3	ROTOR - INCLUDES REF 6	1
8	571E538	MOTOR MOUNTING BASE	1
9	25Z42905	FRONT BEARING	1
10	572F517	MOTOR HEAD	1
11	520M729D1	ROD BOLT	

ILLUSTRATION HL-38A

LIMIT SWITCH ASSEMBLY

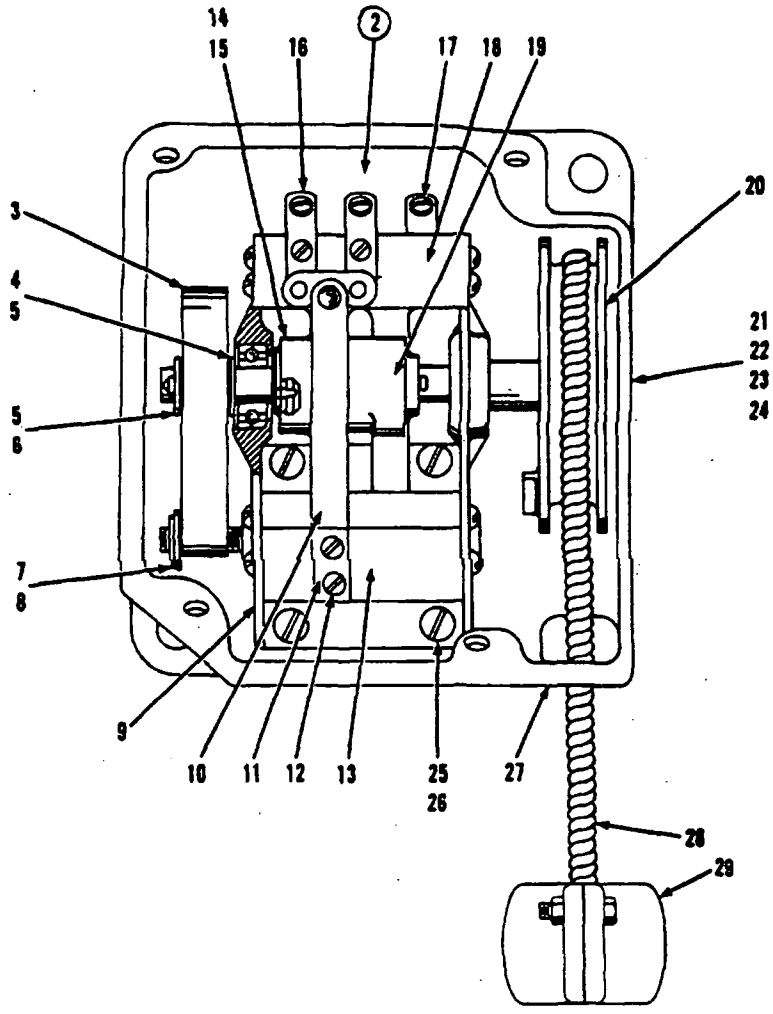

ILLUSTRATION HL-38A-1

LIMIT SWITCH ASSEMBLY

REF.	PART NO.	DESCRIPTION	AMT.
		HOIST T-35566	
1	100E696-3	LIMIT SWITCH ASSEMBLY - w/ ENCLOSURE CONSISTS OF REF 2 THRU 27	1
2	100E695-3	LIMIT SWITCH ASSEMBLY CONSISTS OF REF 3 THRU 20	1
3	17M160	SPRING	1
4	25Z151	BEARING	2
5	79M657	THRUST WASHER	2
6	22Q1V017	COTTER PIN - 3/32 X 3/4 IN	2
7	18M2853	SNAP LOCK	1
8	3631V005	PLAIN WASHER - 1/4 IN	1
9	779G12	FRAME	1
10	979M99	CONTACT FINGER	2
11	79M652	KEEPER PLATE	2
12	20Z4004	RD. HD. SCREW - P.K. TYPE Z #4 X 5/16 IN	18
13	79M654	FINGER SUPPORT	1
14	79M647	CAM - HOISTING CIRCUIT	1
15	2201V019	COTTER PIN - 3/32 IN X 1 IN	1
16	979M101	CONTACTS	4
17	0660V035	BINDING HD. MACH. SCREW #6-32 X 1/4 IN	4
18	79M649	CONTACT SUPPORT	1
19	79M648	CAM - PLUGGING CIRCUIT	1
20	979M100	SHAFT ASSEMBLY	1
21	14E2781	ENCLOSURE - TOP HALF	1
22	14E2780	ENCLOSURE - BOTTOM HALF	1
23	0636V060	FIL. HD. MACH. SCREW-#10-24 X 1/2 IN	4
24	3616V005	LOCKWASHER - #10	4
25	0660V073	RD. HD. MACH. SCREW-#10-24 X 3/8 IN	4
26	3616V005	LOCKWASHER - #10	4
27	20Z869D2	GROMMET	1
28	1030Z53	NYLON CORD - 1/8 IN DIA ORDER BY LENGTH	1
29	9322F6-2	WEIGHT ASSEMBLY	1-

ILLUSTRATION HL-63
BRAKE RECTIFIER ASSEMBLY

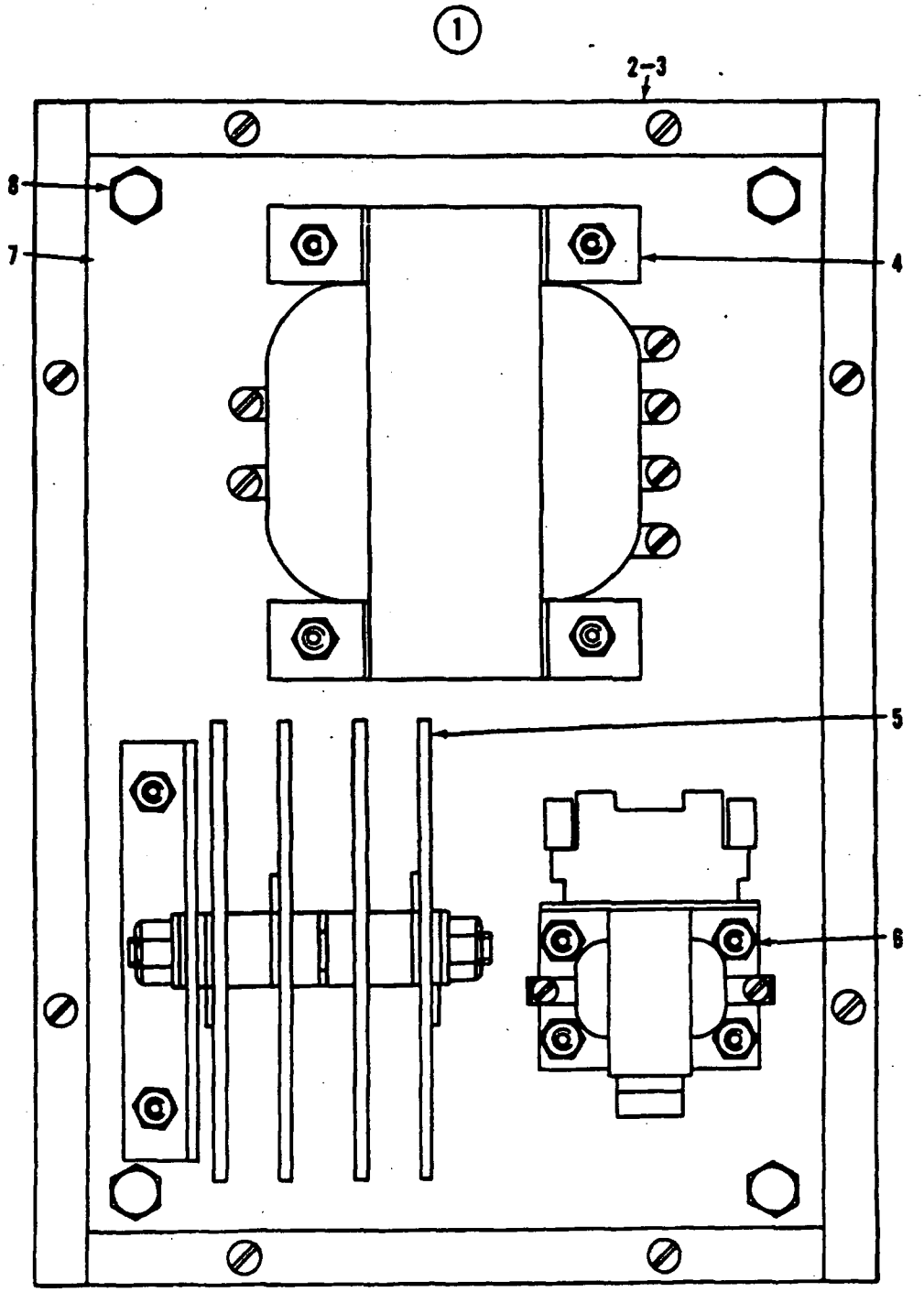

ILLUSTRATION HL-63-3

BRAKE RECTIFIER ASSEMBLY

REF.	PART NO.	DESCRIPTION	AMT.
		HOIST T-35566	
1	72440-2-S	BRAKE RECTIFIER ASSEMBLY	1-
		INCLUDES REF 2 THRU 6	
2	14E1720F1S1	ENCLOSING CASE	1-
3	4-14E1720F1S1	ENCLOSING CASE COVER	1-
4	75Z57D1	TRANSFORMER	1
5	75Z55	RECTIFIER	1
6	79Z257D2	CONTROL RELAY	1
7		NOT USED	
8		NOT USED	

ILLUSTRATION EC-4
CONTROL PANEL

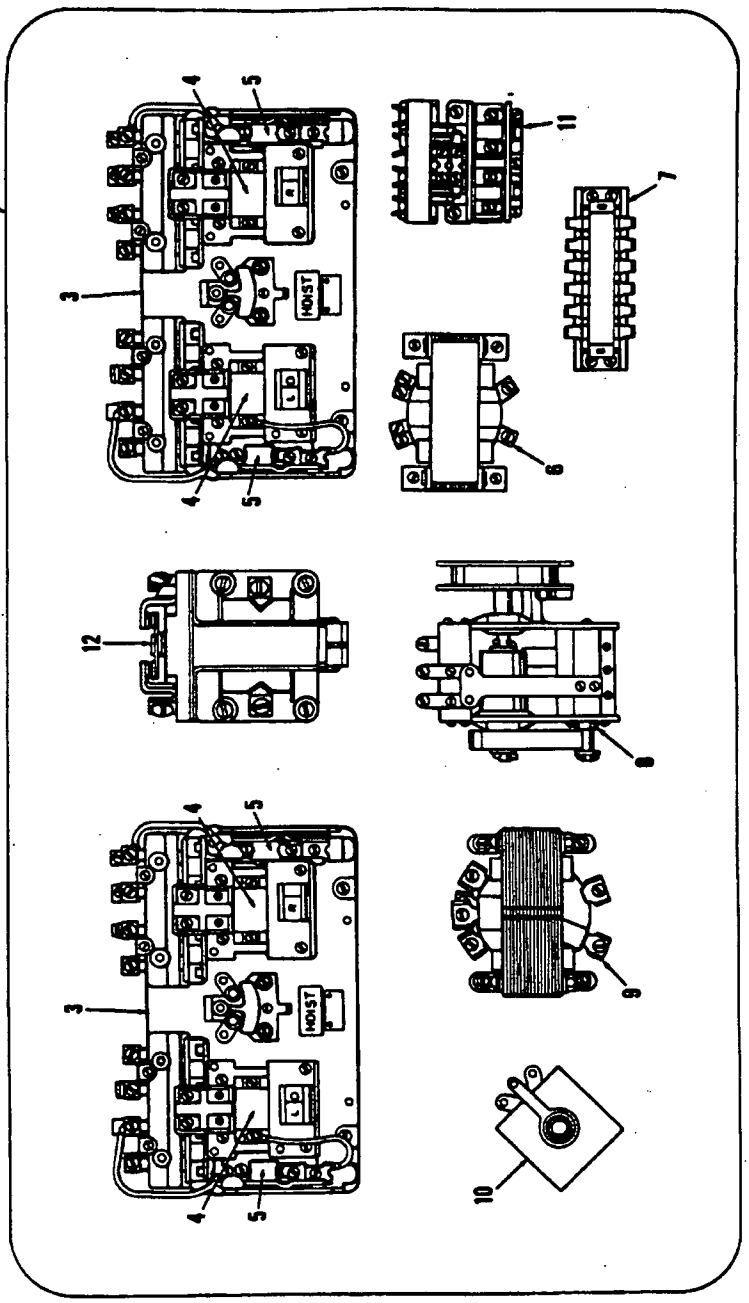

HARNISCHFEGER P&H
Milwaukee 46, Wisconsin, U.S.A.

ILLUSTRATION EC-4-1

TWO SPEED HOIST & SOFT START TROLLEY

REF.	PART NO.	DESCRIPTION	AMT.
		HOIST T-35566	
1	314E73205	CONTROL COVER	1-
2	318F1046D5	BACK PLATE	1-
3	A-105E381-A-1	HOIST CONTROLLER	2
		SEE AB 705 FOR DETAILS	
	10792646	SET MOVABLE CONTACTS W/ SPRINGS	2
	10792711	SET STATIONARY CONTACTS	2
4	75Z335D1	COILS FOR EACH REF 3	2
5	80Z25D9	SET THERMAL ELEMENTS N-28	1-
	80Z25D10	SET THERMAL ELEMENTS N-29	1-
6	75Z165D7	TRANSFORMER - CONTROL	1-
7	79Z792	TERMINAL BOARD	1
8		LIMIT SWITCH - SEE ILLUS. HL-38A	
9		NOT USED	
10		RECTIFIER - SEE ILLUS. HL-63	
11	A-105E377-A-1	REVERSING SWITCH - TROLLEY	1-
		SEE A.B. 705 FOR DETAILS	
	10792714	SET MOVABLE CONTACTS W/SPRINGS	2-
	10792713	SET STATIONARY CONTACTS	2-
	75Z334D1	COILS FOR REF. 11	2-
12	79Z72901	RELAY	1
		FOLLOWING ITEMS NOT SHOWN	
13	80Z25D17	SET THERMAL ELEMENTS N-14	1-
14	A-105E375-A-1	REVERSING SWITCH - TROLLEY	1-
		SEE A.B. 705 FOR DETAILS	
	10792714	SET MOVABLE CONTACTS W/SPRINGS	2-
	10792713	SET STATIONARY CONTACTS	2-
	75Z334D1	COILS FOR REF. 14	2-
15	75U6D9	AUTO. TRANSFORMER - TROLLEY	1-

Renewal Parts

Bulletin 705 · Reversing Starters

(Special for Harnischfeger Corp.)

Size 1 Illustrated

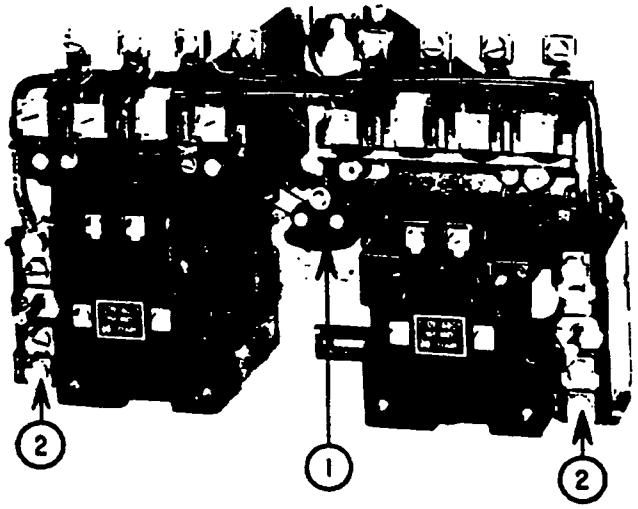

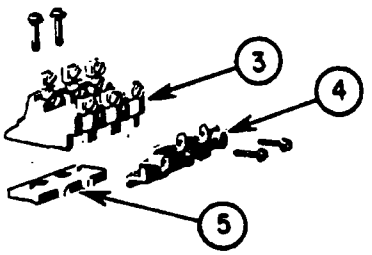

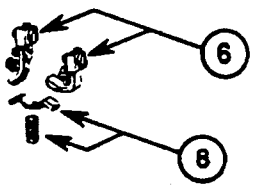

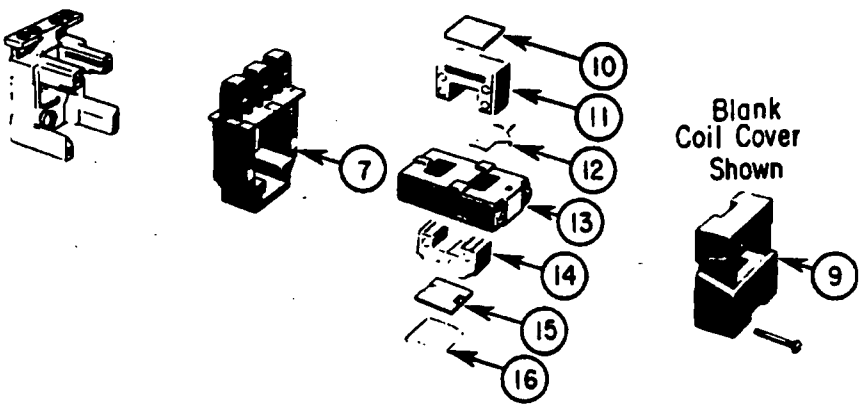

USHO 002195

Publication RL1 June 1967

Renewal Parts

Bulletin 705 · Reversing Starters

(Special for Harnischfeger Corp.)

Size 1 Illustrated

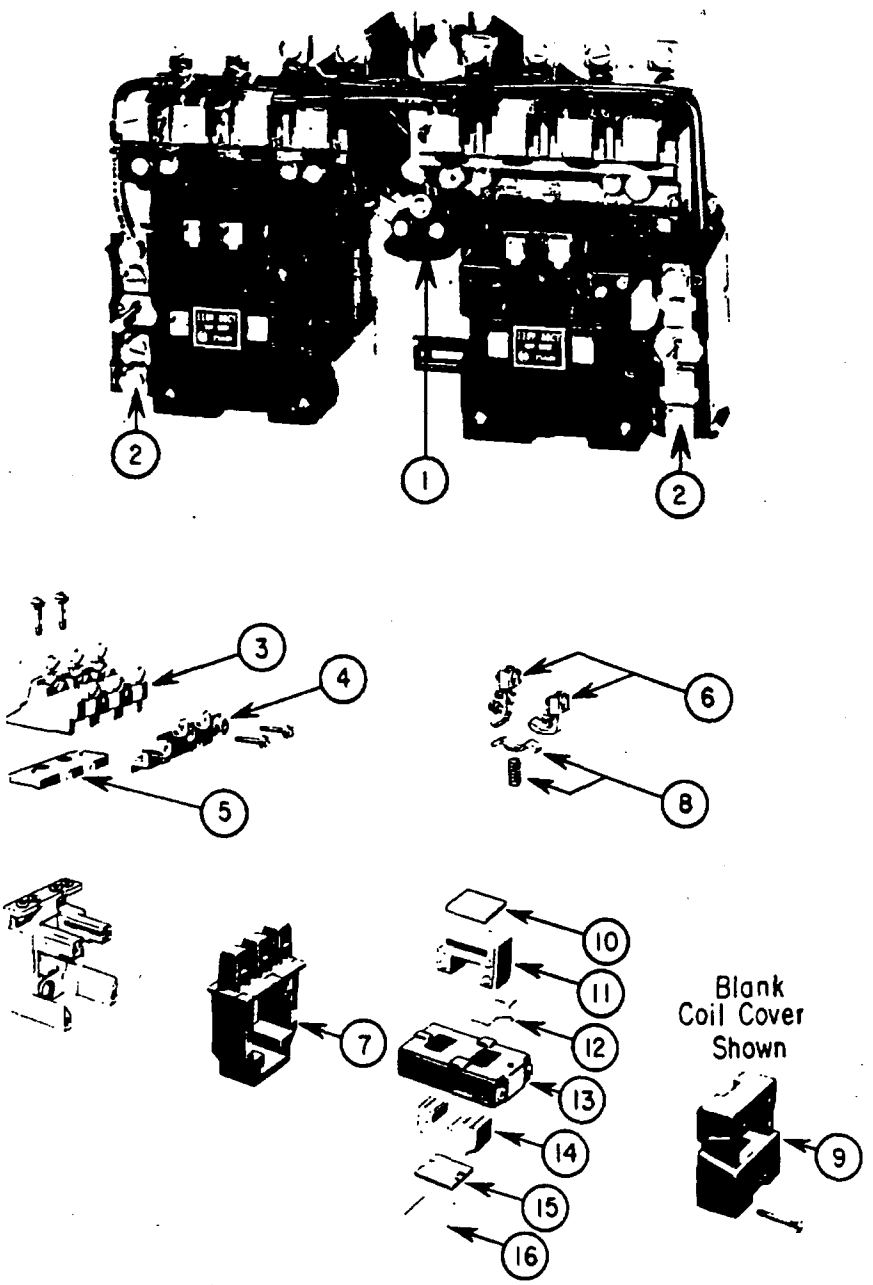

Publication Rel. June 1967

ILLUSTRATION HL-50A-2

4 BUTTON PUSH BUTTON STATION

REF.	PART NO.	DESCRIPTION	AMT.
		HOIST T-35566	
1		NOT FURNISHED	
2	85Z24D8	CORD GRIP	1
3	55095-9-S	PUSH BUTTON STATION INCLUDES 4-7 22-34	1-
4	314E308	CASE	1
5	314F276-C1	COVER	1
6	20H785	GASKET	1
7	0860V111	RD. HD. MACH. SCREW - 1/4 IN - 20 X 5/8 IN	6
	3616V007	W/ LOCKWASHER 1/4 IN	6
		REF. 22 THRU 25 NOT USED	
26	20H769	INSULATOR	1
27		NOT USED	
28	14H493	BAKELITE WASHER	4-
29	79Z602D1	RUBBER HOOD	4-
30	18H2464	SPONGE RUBBER WASHER	4-
31	54958-3	PUSH BUTTON - TWO SPEED	4-
32	819H67D29	DRIV-LOK PINS	8-
33		SEE NO 26	
		FOLLOWING PARTS REQUIRED WHEN FURNISHING COMPLETE ASSEMBLY OF PUSH BUTTON STATION WITH CABLE AND CORD GRIP	
35		NOT FURNISHED	
36		NOT FURNISHED	
37	316F265	WALL BRACKET - NOT SHOWN	1-

ILLUSTRATION HL-50A

PUSH BUTTON STATIONS

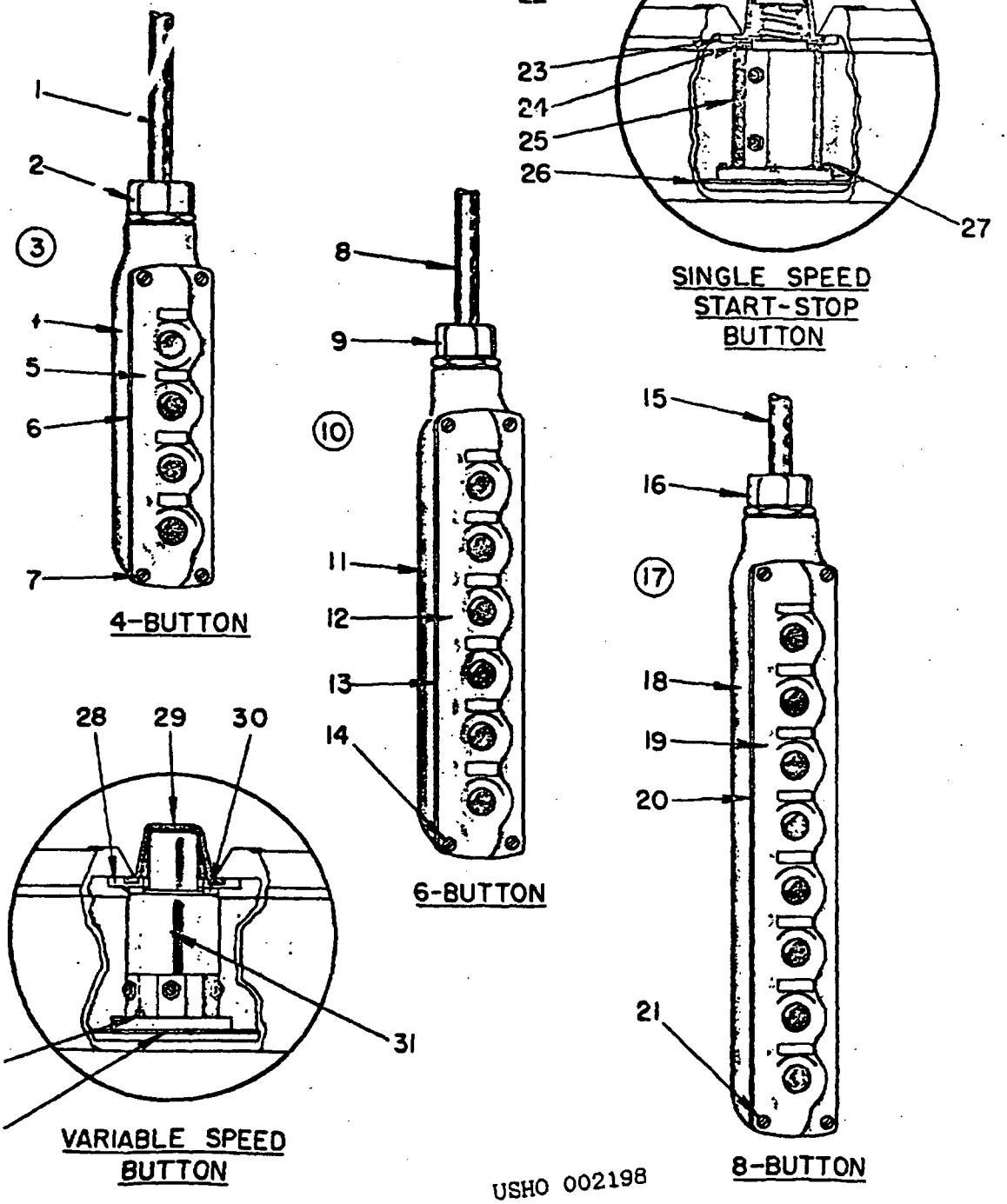

HL

USHO 002199

#309248

CHP	7-12-68
REP	HARNISCHFEGER P&H Milwaukee, Wisconsin, U.S.A.
E.A.B.	TITLE WIRING DIAGRAM
HEL	PROD OR MODEL 2 MOTOR A.C. P.B. T.S. CONTROL
	DWG NO 101E5665

J. B. SALES CO.
MANUFACTURERS REPRESENTATIVE
P. O. BOX 1162
PITTSBURGH, PA. 15230
JACK BARNEY
PHONE (412) 391-3566

D. WHL'S-NON SWIVEL HANGER

ORD. # - 321956

USHO 002200

NAME & DATE	SURFACE ROUGHNESS NOTE			PART NO.	HEAT TREATMENT OR PROCESSING SPECIFICATIONS	
	SURFACE MARKED THUS Y MUST BE WITHIN A ROUGHNESS VALUE OF 250 MICROINCHES UNLESS OTHERWISE SPECIFIED			SCALE 12"=3"=1'-0"	DATE 8-24-67	BASIC LIST NO. / SIMILAR TO
	GENERAL TOLERANCE NOTES UNLESS OTHERWISE SPECIFIED			DR. BY C.F.	HARNISCHFEGER P&H Milwaukee, Wisconsin, U.S.A.	
	STRUCTURAL ±1/16"	MACHINING ±.015"		TR. BY	TITLE TROLLEY ASSEM.	
	ESTIMATED WEIGHTS RGH.	FIN.		CH. BY	PROD. OR MODEL FESTOON COND. SYSTEM	
	REPETITIVE	NON-REPETITIVE	SUFFIX NO. / NAME DATE	APP. BY CH. ENG.	DWG. NO. 100A4476-F11 S88	
				PROC. BY JB		

21 22 23 24 25 26

P&H

QUALITY & SERVICE SINCE 1884

REGIONAL SERVICE OFFICES

MILWAUKEE OFFICE - CENTRAL
4400 W. NATIONAL AVENUE
MILWAUKEE, WISCONSIN 53246
PHONE: 671-4400 (414)

SEATTLE OFFICE - NORTHWEST
135 S. BRANDON STREET
SEATTLE, WASHINGTIN 98108
PHONE: 762-9003 (206)

ATLANTA OFFICE - SOUTHERN
359-361 E. PACES FERRY RD., N.E.
ATLANTA, GEORGIA 30305
PHONE: 231-3050 (404)

NORWALK OFFICE - WESTERN
14420 S. BLOOMFIELD AVENUE
P.O.BOX 505
NORWALK, CALIFORNIA 90652
PHONE: 864-2751 (213)

TETERBORO OFFICE - EASTERN
100 NORTH STREET
TETERBORO, NEW JERSEY 07608
PHONE: 288-1228 (201)

DISTRICT SALES OFFICES

ATLANTA, GA.
BIRMINGHAM, ALA.
BOSTON, MASS.
BUFFALO, N.Y.
CHICAGO, ILL.
CINCINNATI, OHIO
CLEVELAND, OHIO
DALLAS, TEXAS
DETROIT, MICH.
LOS ANGELES, CALIF.
MILWAUKEE, WIS.
NEW YORK, N.Y.
PHILADELPHIA, PA.
PITTSBURGH, PA.
ST. LOUIS, MO.
SAN FRANCISCO, CALIF.
SEATTLE, WASH.

AGENTS AND SERVICE STATIONS IN ALL PRINCIPAL COUNTRIES OF THE WORLD

USHO 002201

the **P&H** *Line*

ZIP-LIFT HOISTS

HEVI-LIFT HOISTS

CHAIN HOISTS

OVERHEAD CRANES

TRUCK CRANES

POWER SHOVELS

WELDERS

WELDING ELECTRODES

USHO 002202