DISHED HEAD INSUL. (cont'd.)

4A2.10 The blocks for the second circle shall be applied next. The blocks shall be beveled to fit the center block and mitered to fit the adjoining blocks. To get the correct miter the blocks shall be placed in position and a straight edge run from the center of the head to the far corners of the blocks and a cut line made. (See figure 12)

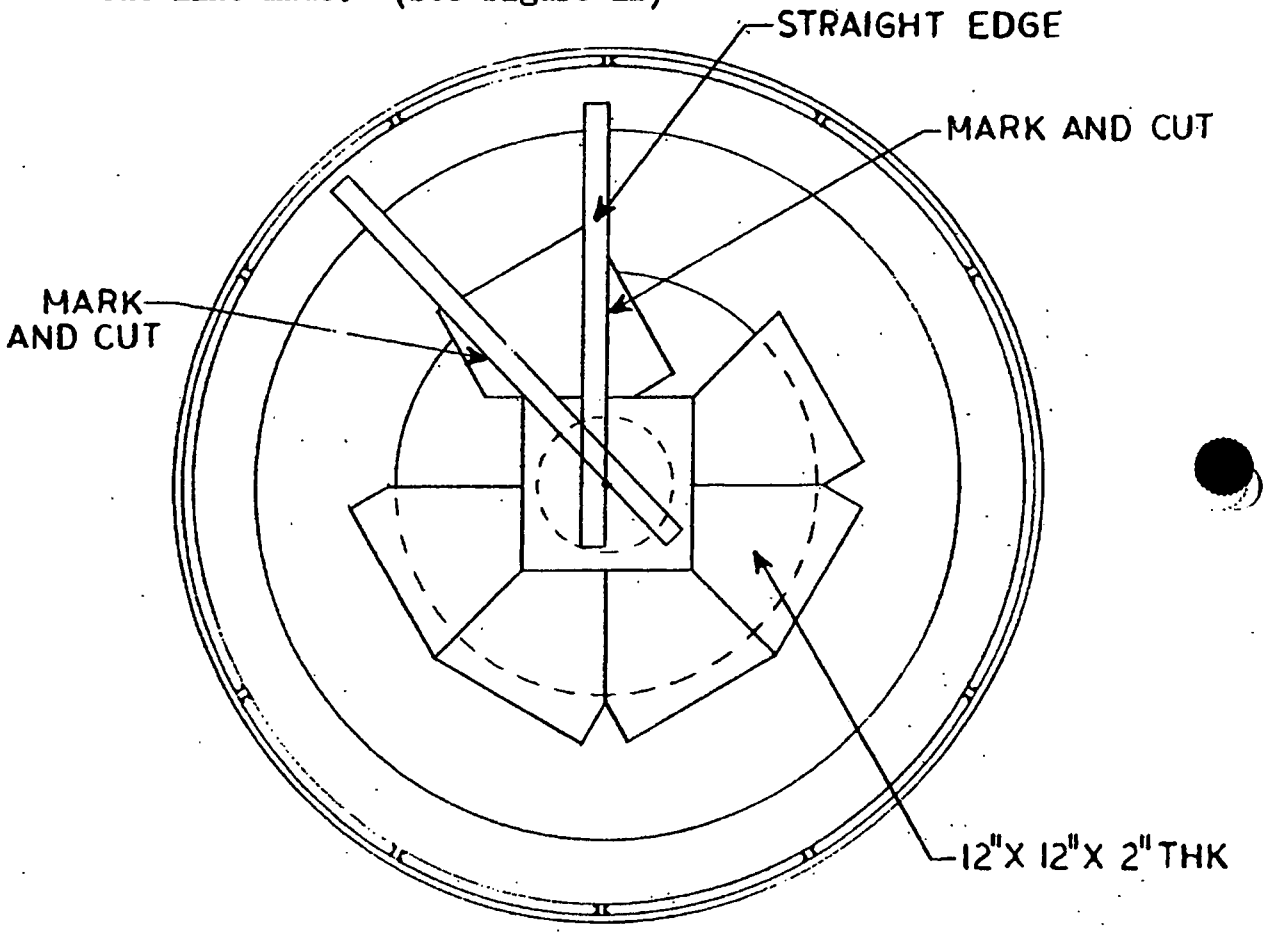

FIGURE 12

The joints between the blocks shall be made tight by rubbing them together once or twice, while in place on the head, and before applying the P.V.A. mastic.

The outer ends of the blocks shall be cut to the line of the concentric circle. (See figure 13A)