Eaton® axles for White Freightliner trucks
Matched to the job for top performance

Single Reduction Axles (single drive and tandem)

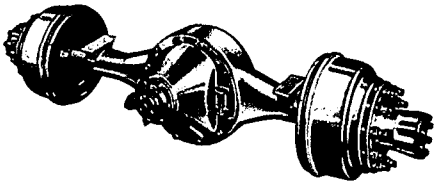

For local or short-haul delivery or line hauling, the Eaton single reduction axle combines top loads and road speeds for the job it can do best. Single drive axle capacities up to 26,000 lbs. Tandem bogie capacities to 44,000 lbs. It's the long-life axle with features that assure smooth, quiet, dependable operation.

Design features

- Large spiral bevel ring gear for strength, more tooth contact, longer life.
- Exclusive conical carrier adds strength, saves weight.
- Positive lubrication keeps axle running cooler.

Dual Range Axles (single drive and tandem)

For on-off highway, heavy-duty hauling, the Eaton dual range axle provides faster trip time and greater profitability.

Two ratio ranges are provided. Low range for startability . . . acceleration is accomplished through transmission shifts . . . then one axle shift to high provides top cruising speed on the highway.

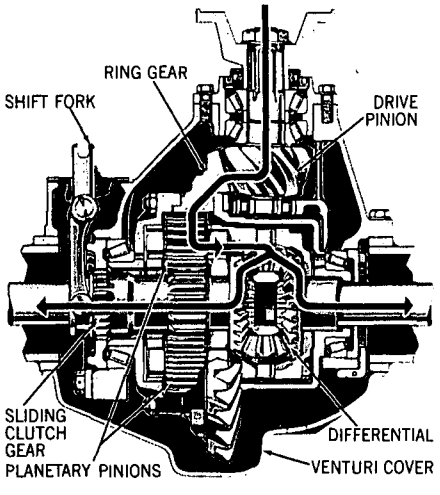

Design features

- Ratio ranges are accomplished through a combination of strong, tough spiral bevel gearing and planetary gearing.
- Forced Flow lubrication assures positive lubrication of all moving parts.
- Quick, responsive shifting. The piston air-shift provides driver control through a selector button mounted on the dash panel.
- Simple design with strong construction provides long life and lighter weight.
- Single drive axle capacities up to 26,000 lbs. Tandem bogie capacities up to 44,000 lbs.

Planetary Double Reduction Axles (single drive and tandem)

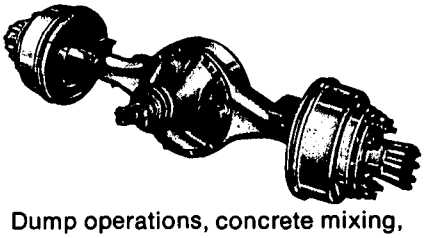

Dump operations, concrete mixing, airport refueling, municipal service and logging operations—these are the jobs that derive maximum benefits from the unique strength of Eaton planetary double reduction gearings.

The Eaton planetary double reduction axles, in single drive or tandem, provide a wide range of effective ratios for delivering loads to the most rugged job sites.

They're built to take all the torque modern engines can develop. They're strong, compact and designed for tough jobs.

Design features

- The first reduction is accomplished between a rugged pinion and drive gear. Four durable planetary pinions provide the second reduction.
- Exclusive planetary design eliminates gear separation under peak load, provides 2½ times more tooth contact, reduces gear loads and tooth wear.
- Forced Flow system assures positive lubrication.

D380, D400 Tandems

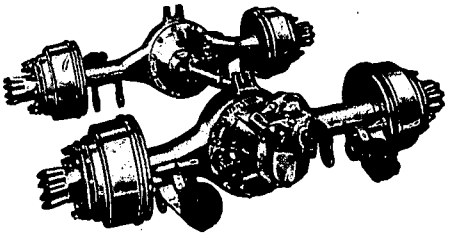

These tough tandems are built to accommodate the high stresses of the big engines of today and tomorrow. Heavy-duty trucking demands for performance and profitability can be satisfied with the ruggedness and extended service life designed in these axles.

Single reduction, dual range and planetary double reduction types, in a wide range of ratios, are available to custom-build your rig and match your operations. Bogie capacities from 38,000 to 44,000 lbs. on, off, or on-off highway.

Design features

- Ring gears are a full 16½" pitch diameter with 2⅝" face width.
- Each design characteristic of the shafts and yokes was engineered to provide tough, strong, long-life components. Input shaft is supported with a large, taper roller bearing.
- The inter-axle differential includes large, strong gears and pinions. Spider arms are bushed. Open-type design results in cool operation.
- Newly-designed lockout clutch provides extreme accuracy, smooth positive shifting, and permanent engagement under high stresses.
- Forced Flow lubrication keeps all power divider vital parts bathed in oil. The axle housing "venturi" cover, combined with efficient oil distributing systems for the differential gears and bearings, provides effective lubrication and cool operation.
- Short-coupled tandem design permits minimum tractor wheelbase and less severe drive line angularity.

Match the D380 or D400 to your operations for maximum loads, speeds, and extended axle life.

Copyright © Eaton Corporation, 1973