AMERICAN STANDARD

oil burner repair parts

Effective:
October 1, 1973

contents

oil burner number	boiler number	page number
DH	A-3, V-3M, etc.	3-5
DH-F	DP(T), VP(T), V-3	4-5
LC-334, LC-534-A	PFA-3	6-7
LC-534-AD, HC-34-AD	FRA-5	6-7
95A, 96A, 96AB	PFA-504 thru 509	8-9
96AT	PFA-510	10-11
96A-HiLo	PFA-504 thru 510	10-11
97AT-4	PFA-511 thru 515	10-11
97A-HiLo	PFA-511 thru 517	10-11
98A-HiLo	PFA-518 thru 521	10-11
burner mounting accessories		12

Important: see ordering instructions page 2

This Price List has been prepared for the convenience of American-Standard distributors and their trade customers only. The list prices shown do not purport to represent actual resale prices in any particular market.

tabbies
PLAINTIFF'S EXHIBIT
ASI-333
01235

INSTRUCTIONS FOR ORDERING REPAIR PARTS

IMPORTANCE OF MODEL AND SERIES NUMBERS:

In order to make certain that the parts you order will fit, it is necessary to give the Model, Series and U.L. number, which are found on a small plate on the oil burner blower housing or on the end plate of Arcoflame Oil Burners, for example, Model DH-5, Series T-1. If possible include boiler and series numbers.

When it is impossible to find the Model and Series numbers, draw a free-hand sketch of the part giving the main dimensions and send it with the order.

WHAT TO SPECIFY ON ALL ORDERS:

1. Quantity of each item wanted.
2. Part number and description, as shown in this book.
3. Model number of burner, for example, DH-6.
4. Series number of burner, for example, T-1.
5. Boiler number, for example, PFA-34 series 1B-J1.
6. Spray angle and capacity in gallons should be specified for oil burner nozzles.
7. Specify method of shipment.

American-Standard DH oil burner

illus. no.	description	DH-5 part no.	DH-5 list price	DH-6 part no.	DH-6 list price	DH-8 part no.	DH-8 list price	DH-15 part no.	DH-15 list price
1	rear cover plate assem. with cad cell detector	31158	$ 6.00	31159	$ 6.00	31160	$ 6.00	31161	$ 6.00
2	oil pipe	17573	1.20	17574	1.40	17575	1.60	17576	2.00
2A	oil pipe filler rod (not shown)	17571[1]	.40	–	–	–	–	–	–
3	electrode-insulator assem. R.H.	15156	1.20	15156	1.20	15156	1.20	15156	1.20
3A	electrode-insulator assem. L.H.	15156	1.20	15156	1.20	15156	1.20	15156	1.20
	bus bars for vertical mounted electrodes:								
4	upper or lower (not shown)	17579	.60	17580	.60	17581	.80	17582	1.20
	bus bars for horizontal mounted electrodes:								
4A	upper	11386	.60	11388	.60	11390	.80	11392	1.20
4B	lower	11387	.60	11389	.60	11391	.80	11393	1.20
5	electrode and disk holder	17587	.60	17587	.60	17587	.60	17587	.60
6	electrode clamp assembly	15146	.60	15146	.60	15146	.60	15146	.60
7	disk: gph dia.								
7A	0.55-1.10 3 5/16"	15149	.60	–	–	–	–	–	–
7B	0.90-1.65 3"	15150	.60	15150	.60	15150	.60	15150	.60
7C	0.65-3.00 has legs	15151	.60	15151	.60	15151	.60	15151	.60
8	positioning spring leg	15155	.60	15155	.60	15155	.60	15155	.60
9	nozzle adaptor	74468	1.00	74468	1.00	74468	1.00	74468	1.00
9A	spinner retaining ring for nozzle adaptor	–	–	–	–	–	–	–	–
10	inner assem. alignment block	17578	.80	17578	.80	17578	.80	17578	.80
11	oil pipe brass elbow fitting	98347	.60	98347	.60	98347	.60	98347	.60
12	bus bar support assembly (not shown)	–	–	–	–	–	–	94189	2.20
13	12 blade spinner assembly	–	–	–	–	–	–	–	–
14	DH complete inner burner assem. (consists of Cat. Nos. 2-13) specify disk - turb. combination No. gph								
	R1 0.55-1.10	17559	10.00	–	–	–	–	–	–
	R2 1.00-1.85	17560	10.00	–	–	–	–	–	–
	1 0.65-1.10	17559	10.00	17562	9.80	19246	10.40	19237	13.80
	2 0.90-1.75	17550	10.00	17563	9.80	17565	10.40	17567	13.80
	3 1.80-2.50	17561	10.00	17564	9.80	17566	10.40	17568	13.80
	4 2.35-3.00	17561	10.00	17563	9.80	17566	10.40	17568	13.80
15	DH-F inner burner assems.	–	–	–	–	–	–	–	–
16	nozzles - specify size gph, spray angle, solid or hollow	–	2.40	–	2.40	–	2.40	–	2.40
17	motor, ½ hp. 115 V. 60 HZ 1725 RPM	28571	46.00	28571	46.20	28571	46.20	28571	46.20
18	blower wheel	15206	3.40	15206	3.40	15206	3.40	15206	3.40
19	blower housing assembly	20992	21.00	20992	21.00	20992	21.00	20992	21.00
20	air adjustment slide	17539	.60	17539	.60	17539	.60	17539	.60
21	air adjustment indicator	17541	.60	17541	.60	17541	.60	17541	.60
22	air adjustment slot cover	17540	.60	17540	.60	17540	.60	17540	.60
23	single stage fuel unit	30927	30.00	30927	30.00	30927	30.00	30927	30.00
23A	two stage fuel unit	12794	43.00	12794	43.00	12794	43.00	12794	43.00
24	flexible coupling for single stage fuel unit	28549	1.20	28549	1.20	28549	1.20	28549	1.20
24A	flexible coupling for two stage fuel unit	27174	1.20	27174	1.20	27174	1.20	27174	1.20
25	ignition transformer, 115V. 60 HZ	17007	22.00	17007	22.00	17007	22.00	17007	22.00
26	air tube	23898	4.80	17596	5.20	17597	5.60	17598	6.00
	chokes: No. gph type dia. opening								
27A	R-1 0.55-1.10 ref. 2 1/16"	22496	1.40	–	–	–	–	–	–
27B	R-2 1.00-1.85 ref. 2 3/4"	23782	1.40	–	–	–	–	–	–
27C	1 0.65-1.10 c.u. 2 1/4"	03649	2.80	03649	2.80	03649	2.80	03649	2.80
27D	2 0.90-1.75 c.u. 2 5/8"	03650	2.80	03650	2.80	03650	2.80	03650	2.80
27E	3 1.80-2.30 c.u. 3"	03651	3.80	03651	3.80	03651	3.80	03651	3.80
27F	4 2.35-3.00 c.u. 3 3/4"	03652	4.80	03652	4.80	03652	4.80	03652	4.80
27G	F-1 0.65-1.35 c.u. 2 1/8"	–	–	–	–	–	–	–	–
27H	F-2 1.25-1.80 c.u. 2 5/8"	–	–	–	–	–	–	–	–
27I	F-3 1.80-2.80 c.u. 3"	–	–	–	–	–	–	–	–
28	stainless steel ring for cat. nos. 27A & 27B w. screws	22500	1.40	–	–	–	–	–	–
	oil feed line assembly:								
29	single stage fuel unit	30915	2.00	30915	2.00	30915	2.00	30915	2.00
29A	two stage fuel unit	28260	2.00	28260	2.00	28260	2.00	28260	2.00

[1] used for no.'s R-1 and 1 inner burner assemblies for DH-5 burner.

American-Standard DH and DH-F oil burners

illus. no.	description	DH-23 part no.	DH-23 list price	DH-4F part no.	DH-4F list price	DH-5F part no.	DH-5F list price
1	rear cover plate assem. with cad cell detector	31162	$ 6.00	30727	$ 6.00	30728	$ 6.00
2	oil pipe	17577	2.20	30729	1.20	30730	1.20
2A	oil pipe filler rod (not shown)	–	–	30707	.40	–	–
3	electrode-insulator assem. R.H.	15156	1.20	30731	1.20	30731	1.20
3A	electrode-insulator assem. L.H.	15156	1.20	30732	1.20	30732	1.20
	bus bars for vertical mounted electrodes:						
4	upper or lower (not shown)	17583	1.40	–	–	–	–
	bus bars for horizontal mounted electrodes:						
4A	upper	11394	1.40	32298	.60	32305	.60
4B	lower	11395	1.40	32299	.60	32300	.60
5	electrode and disk holder	17587	.60	17587	.60	17587	.60
6	electrode clamp assembly	15146	.60	15146	.60	15146	.60
7	disk: gph dia.						
7A	0.55-1.10 3 5/16"	–	–	–	–	–	–
7B	0.90-1.85 3"	15150	.60	–	–	–	–
7C	0.65-3.00 has legs	15150	.60	15151	.60	15151	.60
8	positioning spring leg	15155	.60	15155	.60	15155	.60
9	nozzle adaptor	74468	1.00	30252	1.00	30252	1.00
9A	spinner retaining ring for nozzle adaptor	[illegible]	–	30429	.40	30429	.40
10	inner assem. alignment block	17578	.80	17578	.80	17578	.80
11	oil pipe brass elbow fitting	98347	.60	98347	.60	98347	.60
12	bus bar support assembly (not shown)	94189	2.20	–	–	–	–
13	12 blade spinner assembly	–	–	31102	4.00	30733	4.00
14	DH complete inner burner assem. (consists of Cat. Nos. 2-13) specify disk - turb. combination						
	No. gph						
	R1 0.55-1.10	–	–	–	–	–	–
	R2 1.00-1.85	–	–	–	–	–	–
	1 0.65-1.10	19248	14.40	–	–	–	–
	2 0.90-1.75	17569	14.40	–	–	–	–
	3 1.80-2.50	17570	14.40	–	–	–	–
	4 2.35-3.00	17570	14.40	–	–	–	–
15	DH-F inner burner assems.	–	–	31004	14.40	31005	14.00
16	nozzles - specify size gph, spray angle, solid or hollow	–	2.40	–	2.40	–	2.40
17	motor, 1/6 hp. 115 V. 60HZ 1725 RPM	28571	46.20	28571	46.20	28571	46.20
18	blower wheel	15206	3.40	30128	3.40	30128	3.40
19	blower housing assembly	20992	21.00	20992	21.00	20992	21.00
20	air adjustment slide	17539	.60	17539	.60	17539	.60
21	air adjustment indicator	17541	.60	17541	.60	17541	.60
22	air adjustment slot cover	17540	.60	17540	.60	17540	.60
23	single stage fuel unit	30927	30.00	30927	30.00	30927	30.00
23A	two stage fuel unit	12794	43.00	12794	43.00	12794	43.00
24	flexible coupling for single stage fuel unit	28549	1.20	28549	1.20	28549	1.20
24A	flexible coupling for two stage fuel unit	27174	1.20	27174	1.20	27174	1.20
25	ignition transformer, 115V. 60HZ	17007	22.00	17007	22.00	17007	22.00
26	air tube	17599	6.40	30425	4.80	30425	4.80
	chokes: No. gph type dia. opening						
27A	R-1 0.55-1.10 ref. 2 1/16"	–	–	–	–	–	–
27B	R-2 1.00-1.85 ref. 2 1/4"	–	–	–	–	–	–
27C	1 0.65-1.10 c.i. 2 1/4"	03649	2.80	–	–	–	–
27D	2 0.90-1.75 c.i. 2 5/8"	03650	2.80	–	–	–	–
27E	3 1.80-2.30 c.i. 3"	03651	2.80	–	–	–	–
27F	4 2.35-3.00 c.i. 3 1/4"	03652	4.80	–	–	–	–
27G	F-1 0.65-1.35 c.i. 2 1/8"		–	31164	2.80	–	–
27H	F-2 1.25-1.80 c.i. 2 5/8"	–	–	–	–	31165	2.80
27I	F-3 1.80-2.80 c.i. 3"	–	–	–	–	03651	3.80
28	stainless steel ring for cat. nos. 27A & 27B w screws	–	–	–	–	–	–
	oil feed line assembly:						
29	single stage fuel unit	30915	2.00	30915	2.00	30915	2.00
29A	two stage fuel unit	28260	2.00	28260	2.00	28260	2.00

American-Standard DH and DH-F oil burners

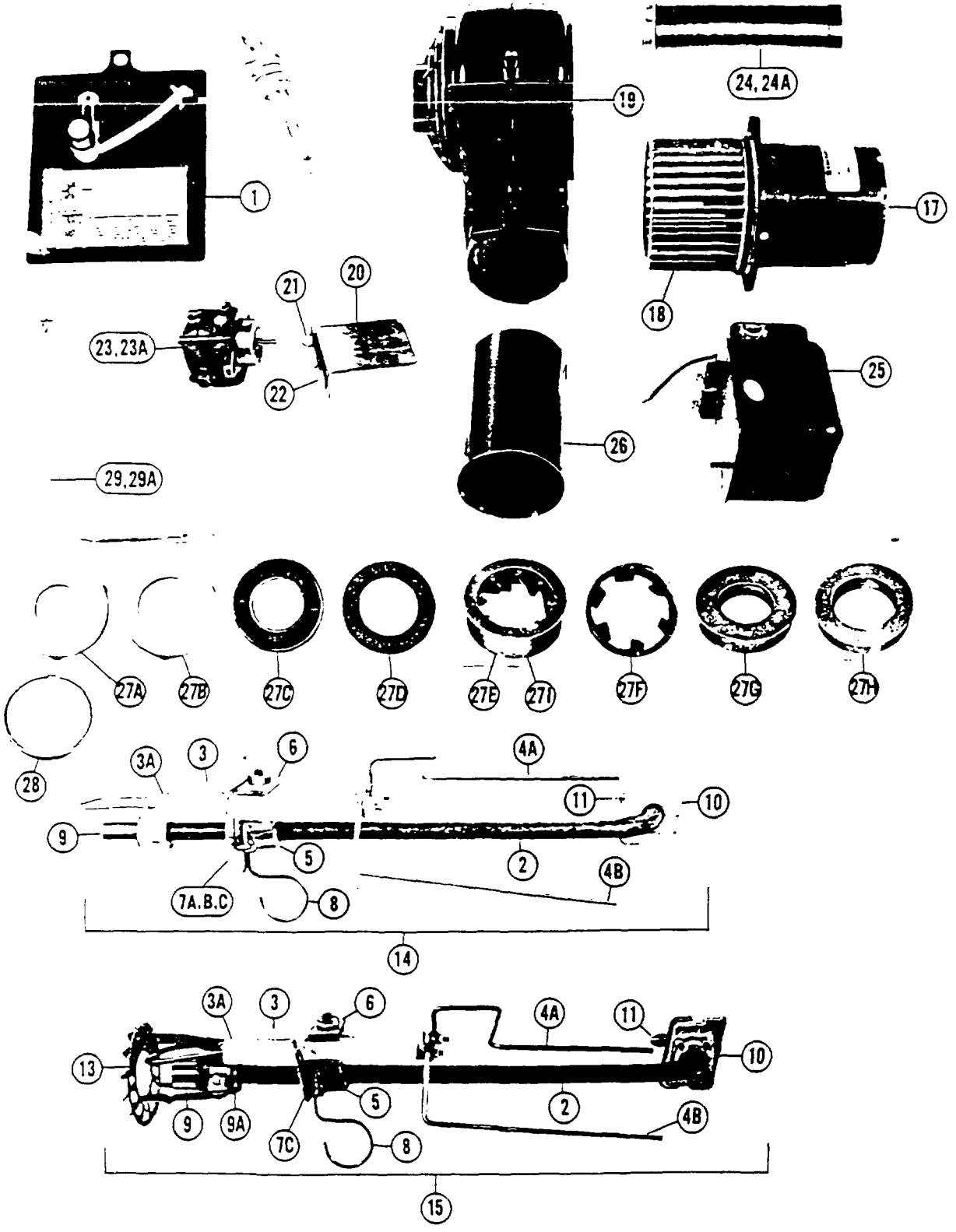

Note: Above is a simulated representation of all burners shown on this parts list and is not intended to be identical in appearance to any specific model.

illus. no.	description	LC-334-A3 PFA-34 part no.	LC-334-A3 PFA-34 list price	LC-334-A PFA-35 part no.	LC-334-A PFA-35 list price	LC-534-A PFA-36 & 37 part no.	LC-534-A PFA-36 & 37 list price	LC-534-AD FRA-504 - 507 part no.	LC-534-AD FRA-504 - 507 list price	HC-34-A-D FRA-508 - 511 part no.	HC-34-A-D FRA-508 - 511 list price
1	housing back cover plate	S42291	$ 2.00	S42291	$ 2.00	S42291	$ 2.00	S42291	$ 2.00	S40611	$ 2.00
2	oil pipe	T40201	2.80	T40201	2.80	T40201	2.80	T40201	2.80	T40211	3.40
3	electrode R or L	E40392	1.20	E40392	1.20	E40392	1.20	E40392	1.20	E40351	1.60
4	electrode bushing R or L	–	–	–	–	–	–	–	–	E40041	.40
5	bus bar, Right	E41161	.40	E41161	.40	E41161	.40	E41161	.40	E40462	.40
5A	bus bar, Left	E41161	.40	E41161	.40	E41161	.40	E41161	.40	E40461	.40
6	electrode support assembly	A42640	3.60	A42640	3.60	A42640	3.60	A42640	3.60	A41191	3.60
7	flame retention cup	A40752	9.20	A40752	9.20	A40752	9.20	A40752	9.20	A40711	11.00
8	nozzle adaptor	S41851	1.00	S41851	1.00	S41851	1.00	S41851	1.00	S42352	1.40
9	oil pipe slide plate	C40441	.60	C40441	.60	C40441	.60	C40441	.60	C41441	.60
10	inner burner assembly (2-9)	A41633	25.00	A41633	25.00	A41633	25.00	A41633	25.00	A41171	25.60
11	motor ¼ H.P. 115V, 60HZ	M40061	56.20	M40061	56.20	M40061	56.20	M40061	56.20	–	–
11A	motor ⅓ H.P. 115V, 60HZ	–	–	–	–	–	–	–	–	M40431	73.40
12	blower wheel	F40191	4.00	F40191	4.00	F40191	4.00	F40191	4.00	F40052	13.40
13	blower wheel extension shaft	–	–	–	–	–	–	–	–	S41112	2.00
14	blower housing assembly	C41231	27.00	C41231	27.00	C41231	27.00	C41231	27.00	C40351	40.60
15	air adjustment band	S42301	1.80	S42301	1.80	S42301	1.80	S42301	1.80	–	–
15A	air shutter, 2 required	–	–	–	–	–	–	–	–	C40551	3.00
16	air inlet guard	–	–	–	–	–	–	–	–	S40361	.60
17	two stage fuel unit	P40072	47.00	P40072	47.00	P40072	47.00	P40072	47.00	P40075	51.40
18	flexible coupling assembly	A40541	2.40	A40541	2.40	A40541	2.40	A40541	2.40	A40611	2.60
19	ignition transformer 115V, 60HZ	M40301	22.00	M40301	22.00	M40301	22.00	M40301	22.00	M40291	22.00
20	air tube w/flange, end cone[1]	A42821	16.40	A42831	16.40	A42841	16.40	A42845	19.00	A42961	19.00
21	end cone	C41341	2.20	C41321	2.20	C41331	2.20	C41331	2.20	–	–
22	instant oil valve	E41151	**	E41151	**	E41151	**	–	–	E41151	**
	delayed oil valve	–	–	–	–	–	–	E41021	**	–	–
23	cad cell w/mount & leads	E41251	**	E41251	**	E41251	**	E41251	**	E41251	**
24	photocell mounting bracket	C40531	2.00	C40531	2.00	C40531	2.00	C40531	2.00	C40531	2.00
25	electronic delay timer	E41365	25.20	E41365	25.20	E41365	25.20	–	–	–	–

(1) end cone not required for HC-34 burner

** price on application

American-Standard LC-334 and LC-534 oil burners

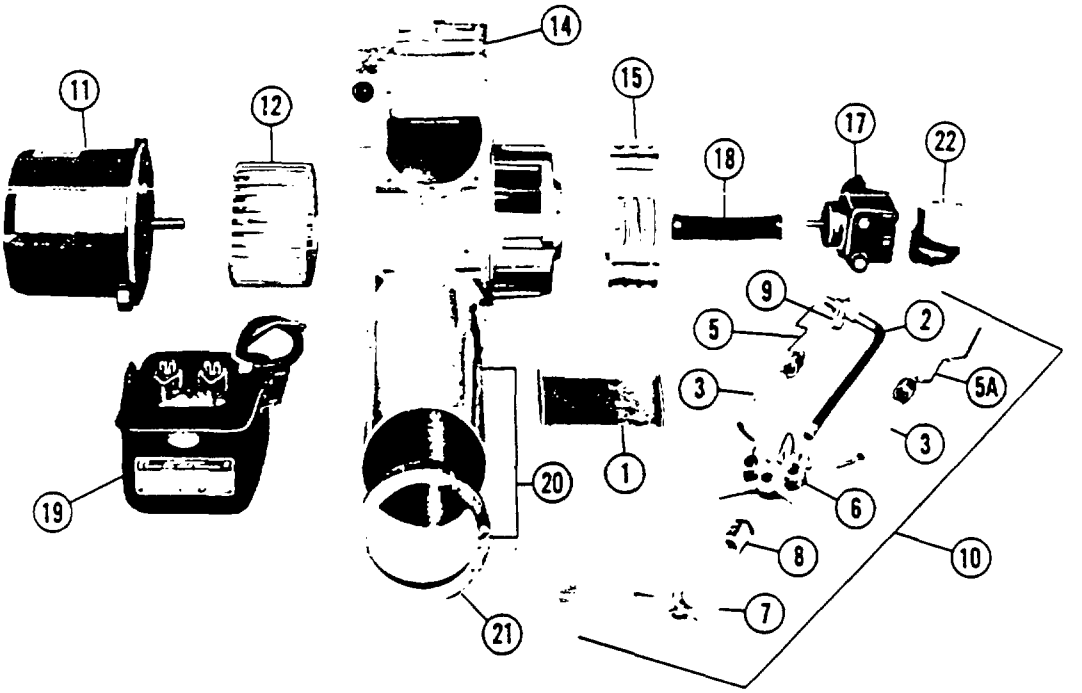

American-Standard HC-34 oil burner

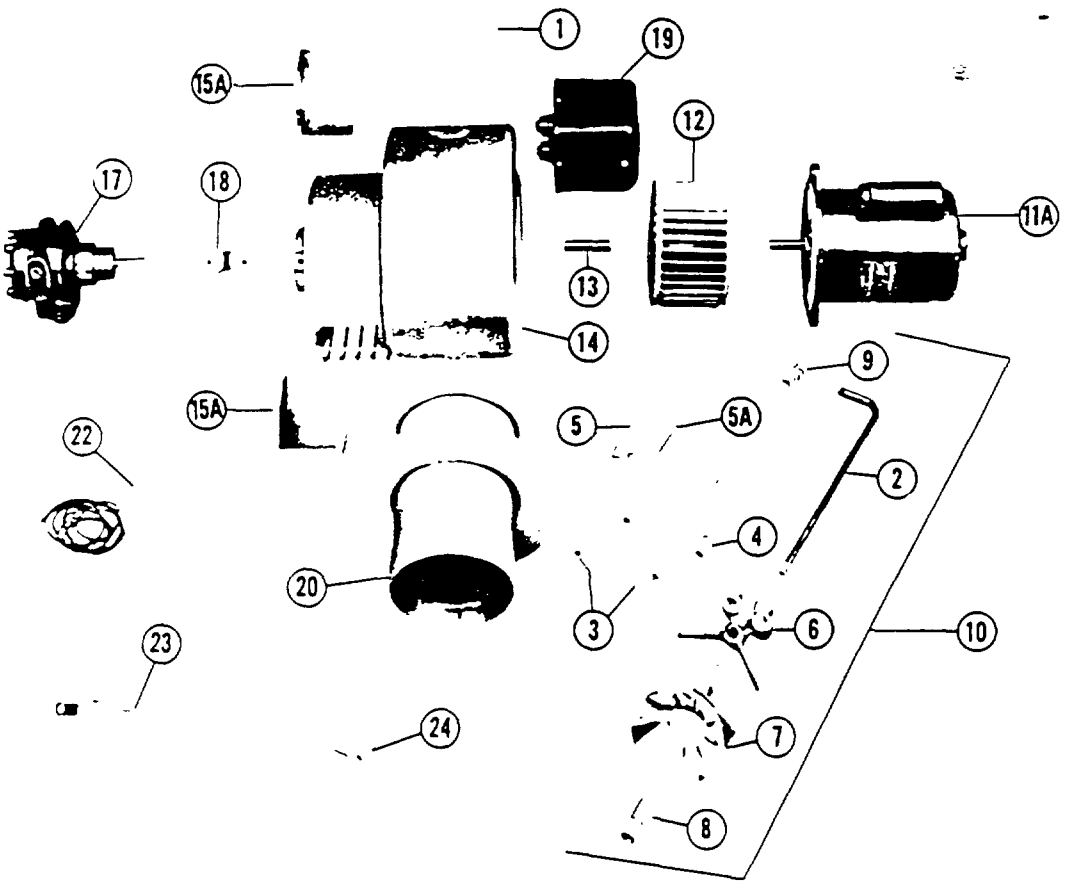

Note: Above is a simulated representation of all burners shown on this parts list and is not intended to be identical in appearance to any specific model.

illus. no.	description	95A PFA-504 part no.	95A PFA-504 list price	96A PFA-505 thru 506 part no.	96A PFA-505 thru 506 list price	96AB PFA-507 thru 509 part no.	96AB PFA-507 thru 509 list price
1	drawer cap assy.	A11817	$ 3.60	8102	$ 1.60	8102	$ 1.60
2	drawer (oil) pipe	10526-7¼"	1.60	9067-10⅛"	3.20	9067-10⅛"	3.20
3	right electrode rod assy.	SA12413-7¼"	3.20	A11446 10⅛"	3.80	A12413-10⅛"	3.80
3A	left electrode rod assy.	SA12414-7¼"	3.20	A11447-10⅛"	3.80	A12414-10⅛"	3.80
4	electrode support assy.	A12680	1.40	SA12011	11.20	SA12011	11.20
5	static pressure disc	–	–	12016-3"	1.20	12016-3 solid	1.20
6	mounting yoke assy.	SA11144	2.40	SA11424	2.40	SA11424	2.40
7	double nozzle adaptor	9486	5.60	9486	5.60	9486	5.60
8	12 blade spinner	10304-3½"	3.20	12416-3½"	3.20	12416-3½"	3.20
9	drawer assy. (complete)	SA10525-7¼"	36.60	SA11448-10⅛"	49.40	SA12415-10⅛"	49.40
10	motor - ½ H.P. - 3450 R.P.M.	6781	**	6781	**	–	–
	motor - ½ H.P. - 3450 R.P.M.	–	–	–	–	11404	**
11	blower wheel assy.	A9769	12.00	A10923	12.00	A10923	12.00
12	blower housing assy.	SA8754	47.80	130013	18.80	SA11105	54.80
13	air inlet housing or cover	10531	4.40	8490	4.40	10958	7.20
14	air inlet or damper assy.	SA8491	3.20	SA8491	3.20	SA8491	3.20
15	fuel pump - 3450 R.P.M.	9758	**	9758	**	9758	**
16	flexible coupling assy.	SA12014-3¼"	6.80	SA12014-5¼"	6.80	SA12014-4¼"	6.80
17	ignition transformer (115V 60HZ)	6850	**	6850	**	6850	**
18	air tube assy. - with flange	A-12834-7¼-2¼"	21.80	A12841-10⅛-2⅛"	25.40	A12833-10⅛-3¼" (507) A12848-10⅛-3⅛" (508) A12848-10⅛-3¼" (509)	28.60 28.60 28.50
19	choke	10523-3⅛"	4.40	230006-4½"	4.80	12803-5" (507) 12412-5¼" (508-9)	4.80 4.80
20	oil line assy.	SA9492	3.20	SA9492	3.00	SA9492	3.00
21	oil valve	V4046B1007	15.60	V4046A1009	15.60	V4046B1007	15.60

** Price on application

American-Standard 95A, 96A and 96AB oil burners

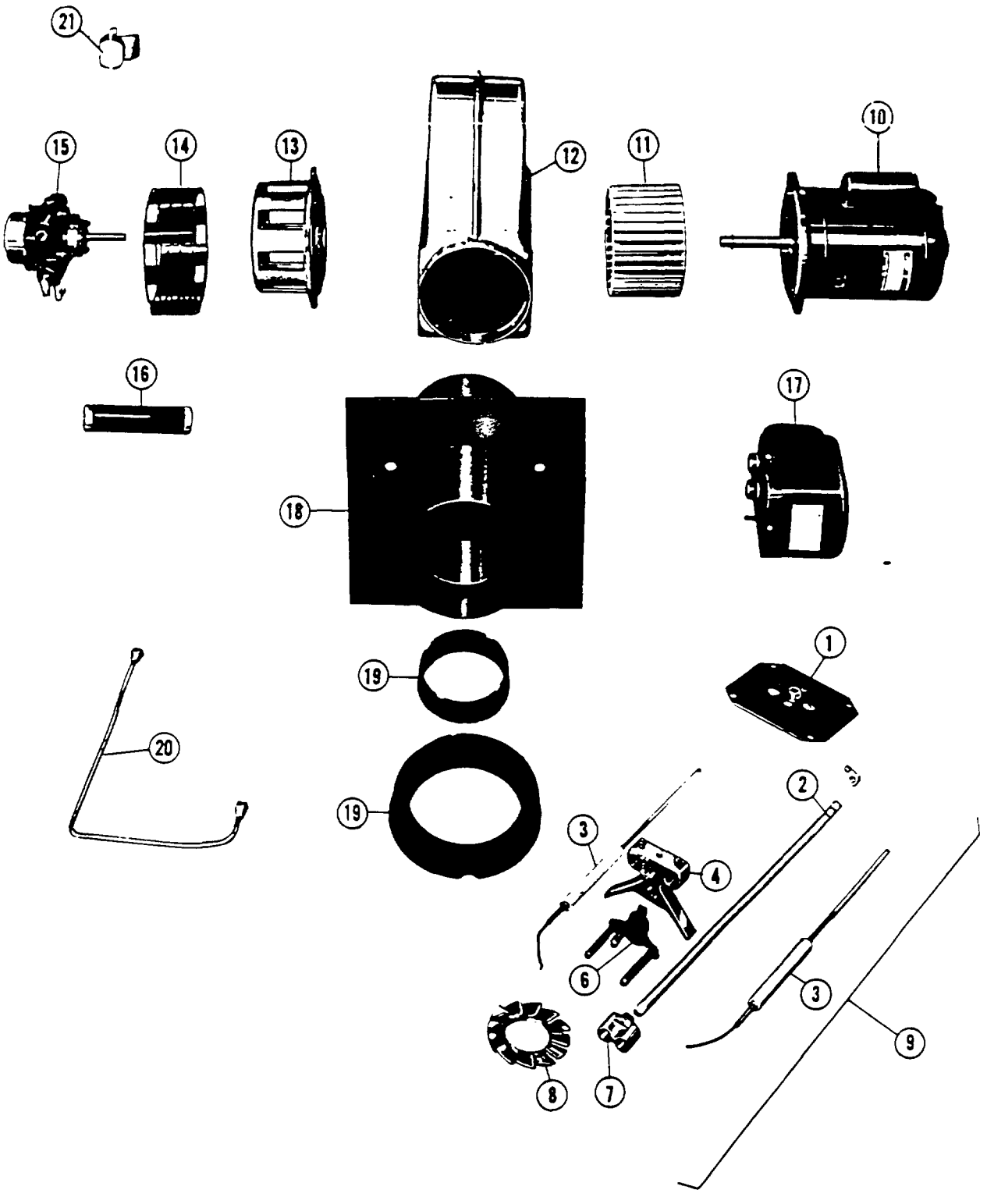

Note: Above is a simulated representation of all burners shown on this parts list and is not intended to be identical in appearance to any specific model.

01243

illus. no.	description	96-AT PFA-510 part no.	96-AT PFA-510 list price	97-AT-A PFA-511 thru 515 part no.	97-AT-A PFA-511 thru 515 list price	96-A-HiLo PFA-504 thru 510 (opt) part no.	96-A-HiLo PFA-504 thru 510 (opt) list price	97-A-HiLo PFA-511 thru 517 part no.	97-A-HiLo PFA-511 thru 517 list price	98-A-HiLo PFA-518 thru 521 part no.	98-A-HiLo PFA-518 thru 521 list price
1	drawer cap	8102	$1.60	SA10607	$4.00	8102	$1.60	SA10607	$4.00	SA10607	$4.00
2	drawer oil pipe (2 req'd)	9067-10 1/8"	3.20	10410-10 1/4"	3.20	9067-10 1/8"	3.20	10410-10 1/4"	3.60	10410-12 1/4"	3.60
3	electrode rod assys (2 req'd)	left-A11490-10 1/8"	3.20	(2 - 1 set)		left-A11490-10 1/8"	3.20	(2 - 1 set)		(2 - 1 set)	
		right-A11499-10 1/8"	3.20	A11494-10 1/4"	3.60	right-A11499-10 1/8"	3.20	A11490-10 1/8"	3.20	A11490-12 1/4"	3.80
4	drawer pipe tie blocks	9711	1.60	9711	1.60	9711	1.60	9711	1.60	9711	1.60
5	electrode support assy	SA12026	11.20	SA11087	11.20	SA12026	11.20	SA11087	11.20	SA12026	11.20
6	static pressure disc	12016-3" solid	1.20	11131-4" solid	1.20	12016-3" solid	1.20	12016-3" solid	1.20	11131-4" solid	1.20
7	mtg. yoke & spacer assy	SA12012	2.40	SA12012	2.40	SA12012	2.40	SA12012	2.40	SA10615	2.40
8	double nozzle adaptor	9486	5.60	9486	5.60	9486	5.60	9486	5.60	9486	5.60
9	single nozzle adaptor	7128	1.20	7128	1.20	7128	1.20	7128	1.20	7128	1.20
10	twelve blade spinner	12416-3 1/2"	3.20	11037-3 1/2"	3.20	12416-3 1/2"	3.20	11037-3 1/2"	3.20	10628-4 1/4"	4.40
11	complete drawer assy	SA11497-10 1/8"	87.60	SA11450-10 1/4"	103.40	SA11497-10 1/8"	87.60	SA13407-10 1/4"	103.40	SA11501-12 1/4"	113.00
12	motor (115V/60 Cy) (3450 RPM)	11404	**	6831 (511-514)	**	11404	**	6831	**	SA10948	**
				10932 (515)	**						
12A	motor adaptor flange only	–	–	13317	29.20	–	--	13317	29.20	13317	29.20
13	blower wheel assy	A10923	14.40	A10944	51.00	A10923	14.40	A10944	51.00	A11433	51.00
14	blower housing assy	SA11105	57.40	SA10320-10"	262.00	SA10331	54.20	SA10320-7"	262.00	SA10320-8"	262.00
15	air inlet hsg & cylinder (1)	10958	7.20	--	–	A10886	101.00	–	–	–	–
15A	air inlet band assy	SA8491	3.20	–	–	–	–	–	–	–	–
16	oil cylinder assy	–	–	–	–	SA11200	26.00	SA10837	30.80	SA10837	30.80
17	lower air shutter assy	–	–	320240-2"	7.60	–	–	320240-2"	7.60	320240-2"	7.60
18	linkage arm	–	–	–	–	–	–	11865	.40	11865	.40
19	upper air shutter assy	–	–	–	–	–	–	A11876	12.00	A11876	12.00
20	repl. valve - outlet box assy	A11110	95.60	A11110	95.60	A11056	96.40	A11058	119.40	A11308	119.40
21	flexible coupling assy	SA12014-4 1/4"	6.80	SA12014-6 1/8" (511-514)	9.40	SA12014-4 1/4"	6.80	SA12014-6 1/8"	9.40	SA12014-6 1/8"	9.40
				SA12014-5 1/4 (515)	9.40						
22	fuel pump	9758	**	9758	**	9758	**	9758	**	10612	**
23	ignition transformer (115V 60HZ)	6850	**	6850	**	6850	**	6850	**	6850	**
24	air tube assy w/flange	A12848-10 1/8-3 1/8"	31.80	A12846-10 1/8-3 1/8"	31.80	A12848-10 1/8-3 1/4"	31.80	A12846-10 1/8-3 1/8"	31.80	A12844-12 1/4-3 1/8"	31.80
25	inner choke or stabilizer ring	12412-5 1/4"	4.00	13549-5 1/4" (511)	9.60	–	–	–	–	–	–
				10449 (512-513)	9.60	–	–	–	–	–	–
				11329 (514-515)	9.60	12412	4.00	10449	9.60	10622	9.60
26	outer choke			10475-6 1/2"	4.80	–	–	10475-6 1/2"	4.80	10617-7 1/2"	4.80
27	instantaneous oil valve	V4046B1007	15.60	V4046B1007	15.60	V4046B1007	15.60	V4046B1007	15.60	V4046B1007	15.60
28	3 way instant oil valve	V54DB1400	38.60	V54DB1400(511-14)	38.60	V56DM1150	38.60	V56DM1150	38.60	V56DM1150	38.60
29	oil line assy (1st stage inst. to 2nd stage delayed or 3-way oil valve	A13396	3.20	A12284	3.20	A13396	3.20	A12284	3.20	A12284	3.20
30	oil line assy (1st stage inst. valve to fuel pump)	A13417	3.20	A12281	3.20	A13417	3.20	A12281	3.20	A12281	3.20
31	oil line assy (1st stage inst. valve to 1st stage drawer pipe)	A13416	3.20	A10415	3.20	A13416	3.20	A10415	3.20	A10415	3.20
32	oil line assy (2nd stage or 3-way valve to 2nd stage drawer pipe)	A13422	3.20	A11475	3.20	A13419	3.20	A10420	3.20	A10420	3.20
33	oil line assy (2nd stage 3-way valve to fuel pump)	–	–	–	–	A13418	3.20	A10421	3.20	A10421	3.20
34	oil line assy (2nd stage delayed oil valve to oil cylinder assy)	–	–	–	–	A13420	3.20	A10417	3.20	A10417	3.20
35	(2nd stage delayed oil valve to 2nd stage 3-way valve)	–	–	–	–	A13413	3.20	A10414	3.20	A10414	3.20

(1) AT Burners do not require an oil cylinder as part of air inlet assy.

** Price on application.

American-Standard 96AT, 97AT-A, 96A-HiLo, 97A-HiLo and 98A-HiLo oil burners

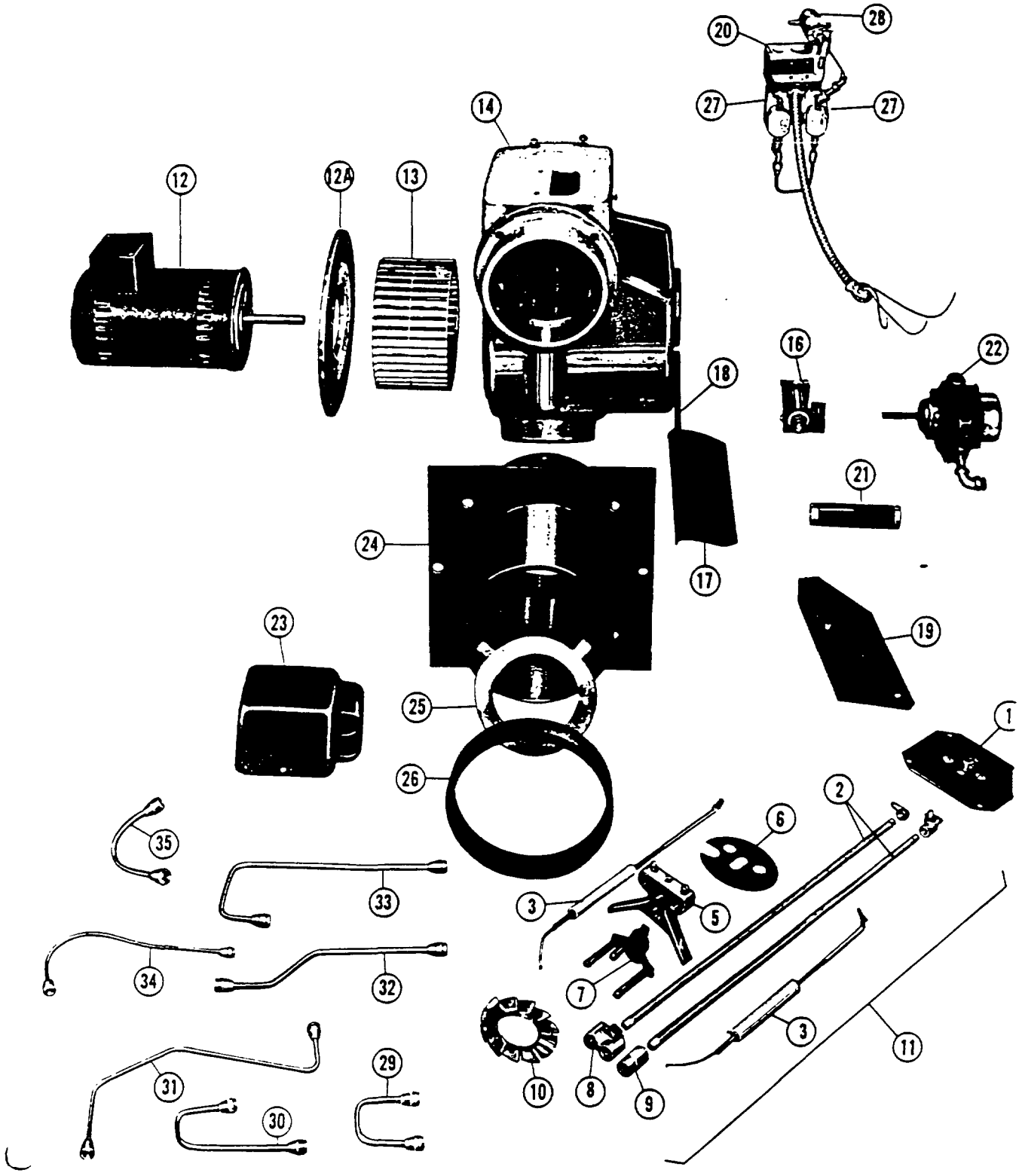

Note: Above is a simulated representation of all burners shown on this parts list and is not intended to be identical in appearance to any specific model.

American-Standard Arcoflame oil burner—mounting accessories

illus. no.	description	used with burner model	part no.	list price
1	pressure ring assembly for V-3, A-3, Arco-leader series 2B, 3B, Arcoliner series 3B, Oakmont series 2B	DH	25794	$2.80
2	burner mounting bracket for Severn series 2B, 3B	DH	95942	6.80
3	pressure plate assembly for Severn series 2B, 3B	DH	95946	6.80
4	pressure plate assembly for A-504 pedestal base	DH-5	16288	2.80
5	pedestal base	DH	17607	2.60
6	flange mounting bracket	DH	07575	7.60
7	draft tube sleeve: Oakmont and Severn	DH	95440	6.40
	VP(T)	DH-F	31396	6.40
8	VP(T) insulation ring	DH-F	25797	2.00
9	pedestal mount: for 97AT-A 97AH-Lo		A9341-9½"	25.20
	for 98AH-Lo		A10606-13½"	25.40

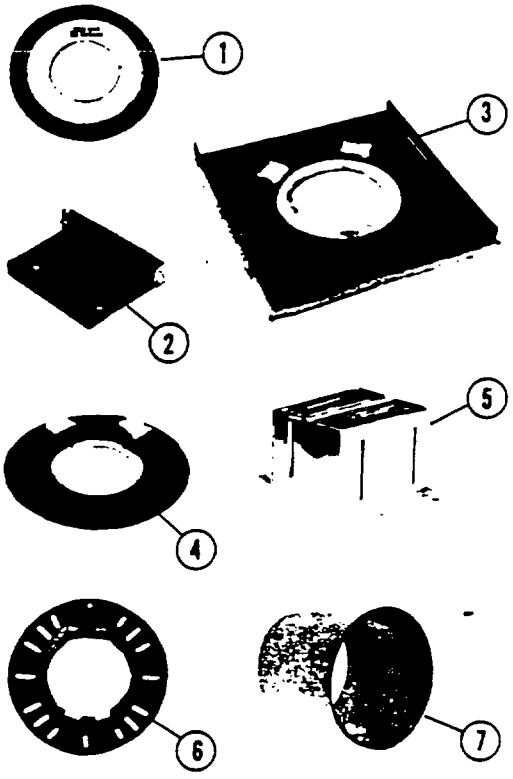

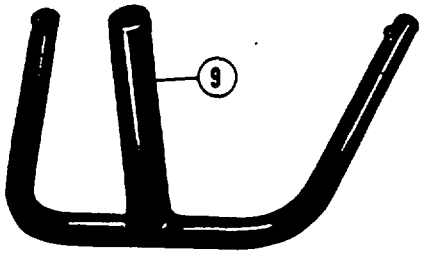

AMERICAN STANDARD
PLUMBING / HEATING
P O BOX 2003 NEW BRUNSWICK, N. J. 08903

Form No 73197-2 (10 73)

Litho in U.S.A.