IN RE: ABRAMS November 1992

NWBB-0008151

[redacted]

Westinghouse

FROM: East Pittsburgh

DATE: 4/16/58

TO: OFFICE METHODS REPRESENTATIVES
MANAGER OF EAST PITTSBURGH ACCOUNTING

SUBJECT: REVISION OF PROCEDURE FOR: PRESERVATION AND DESTRUCTION OF RECORDS - EAST PITTSBURGH DEPARTMENTS

1. GENERAL

(a) The following procedures are to be followed in the operation of the Records Program for controlling the retention, protection and destruction of records as prescribed by the Custodian of Records.

(b) A Records Center has been established at Route 10068, five miles east of Branchton, Butler County, Pa., for safe and orderly retention of records which must be retained after the expiration of the active retention in your files or record room.

2. FORMS

1771 - Storeroom Requisition
28678 - Maintenance Requisition
18209 - Inventory of Records
22903 - Label for Non-Current Records
22904 - Index of Non-Current Records
23022 - Destruction of Records (at East Pittsburgh)
23263 - Flow Schedule
23687 - Request for Records
24781 - Destruction of Records in Records Center
24943 - Shipment Notice - Records to Records Center

3. RESPONSIBILITY OF OFFICE METHODS DEPARTMENT REPRESENTATIVE

(a) Interpret the procedures recommended by the Custodian of Records for the protection and preservation of records and act as contact between Custodian of Records and East Pittsburgh Departments.

(b) In collaboration with the Custodian of Records and the Department Records Representative execute the following:

1. Take initial inventory on Form 18209 for departments which have not been inventoried. Custodian of Records will then prepare Flow Schedules, Form 23263, establishing active and total retention periods.

2. Revise Flow Schedules when necessary to reflect changes in retention period, departments, form numbers and discontinuance of records, etc.

03117169

UNCLASSIFIED November 1992

HWBB-0008152

3. Prepare Inventory, Form 18209, for records placed in use after the initial inventory has been prepared.

4. Arrange for shipment of cartons to S-Annex and Records Center.

4. DEPARTMENTAL RESPONSIBILITY

(a) Advise Office Methods Representative of all changes requiring revision of existing Flow Schedules.

(b) Department Records Representative will collaborate with Office Methods Representative in executing the following:

1. Take initial inventory on Form 18209 for departments which have not been inventoried.

2. Revise Flow Schedules when necessary to reflect changes in retention period, departments, form numbers and discontinuance of records, etc.

3. Prepare Inventory, Form 18209, for records placed in use after the initial inventory was prepared.

(c) Transfer records from department files and destroy records in strict accordance with the Flow Schedule.

(d) When the active retention period has expired, pack, label and prepare records for shipment to Records Center.

(e) Assign box numbers for all cartons of records to be transferred from department to Records Center.

1. Box numbers for all EP Projects are numbered consecutively and controlled by the Project Records Representative.

2. Box numbers for all other East Pittsburgh Projects will be assigned by the following:

JX	Projects	- J. Catterall, Ind. Acctg., 2-E-30
IX	"	- J. Catterall, Ind. Acctg., 2-E-30
IX	"	- J. T. Roney, Ind. Acctg., 2-E-30
IR	"	- J. P. Byrne, Mica Products Acctg., Irwin Works
DE	"	- R. Korody, Porcelain Products Acctg., Derry Works
TP	"	- H. A. John, Accounting Dept., Printing & Nameplate

No block of box numbers will be supplied in advance.

5. RETENTION OF RECORDS IN DEPARTMENT

(a) Records shall be retained in department files or record room for the period shown on the Flow Schedule, Form 23263.

(b) At the time records are removed from active files they shall be packed in standard cartons and labeled. When the active period has expired, cartons shall be sealed and shipped to Records Center.

03117170

November 1992

UNITED ARMS

(c) The above operations shall be performed as explained in paragraphs 6, 7, 8 and 9.

6. PACKING INACTIVE RECORDS IN STANDARD CARTONS

(a) Cartons and orange core gummed tape (3") shall be ordered on Form 1771 from Storeroom 988, East Pittsburgh - Attention: R. O. Bender, Shipping Department, 3-8. (SCARBROUGH - 3844)

(b) In order to prepare the cartons for packing the records, the bottom flaps must be glued securely. Use #680 or 6767-2 glue which may be obtained from Storeroom #919, Oil House. Then apply lengthwise, squarely and evenly, a 3" strip of orange gummed tape where the flaps join. Strip shall not extend over the ends more than 2". (See Exhibit A, Figure 1.) Care shall be taken to be sure the tape adheres properly.

X (c) Records 3 x 5 inches, 4 x 6 inches and 5 x 8 inches are to be packed in carton #92H-1. Its inside dimensions are: width - 8½ inches, depth - 6 inches and length - 18 inches.

(d) Records 10 x 15 inches (legal size) are to be packed in carton #94H-2. Its inside dimensions are: width - 15 inches, depth - 10 inches and length - 18 inches.

(e) Records such as Cost Detail, Bills of Lading, Accounts Payable Vouchers, etc., that are slightly larger than 5 x 8 inches, are to be packed in carton #842. Its inside dimensions are: width - 9 inches, depth - 7½ inches and length - 18 inches.

X (f) Records 8½ x 11 inches are to be packed on the 11 inch edge in carton #677. Its inside dimensions are: width - 12½ inches, depth - 9½ inches and length - 18 inches.

(g) When the volume of records removed from files is large enough, departments shall fill each carton with only one kind of record. Where the volume is small and it becomes necessary to pack more than one kind of record, they shall all carry the same destruction date. In the event the destruction dates are not the same, all records in a given carton will be destroyed according to the latest destruction date.

(h) To prevent crushing and facilitate stacking, only completely filled cartons will be accepted at the Records Center. If records do not completely fill cartons, stuff the unfilled space with wastepaper or suitable packing material.

(i) When a carton has been packed and a Label, Form 22903, has been applied and carton is ready for shipment to Records Center, the top of the carton shall be sealed as follows:

1. Place a strip of 3 inch orange core gummed tape crosswise in the center of each carton. (Exhibit A, Figure 2.)

2. Place strip of 3 inch orange core gummed tape lengthwise where the flaps join. (Exhibit A, Figure 3.)

HWBB-0000152

03117171

IN THE ABRAMS November 1992

NWBB-0008154

3. Seal both ends with a 3 inch strip of orange core gummed tape, folded under at the corners. (Exhibit A, Figure 3.) This makes carton dustproof. In no case shall a strip of gummed tape extend over or under the label.

7. LABELING CARTONS

(a) Prepare a typewritten "Label for Non-Current Records", Form 22903, in duplicate, for each carton as follows:

1. Under "Plant or Office" show East Pittsburgh.

2. Under "Div. (or Dist.) and Dept." show the name of Division and Department or Section, examples: "L.R.A. Dept., Development Engineering - Power Circuit Breaker Dept., Industrial Engineering".

3. Under "Box No." show the project prefix letters and number, and the box number for all "EP" projects. For all other projects show prefix letters and box numbers only.

4. Under "Name of Records" show name of contained records exactly as shown on Flow Schedule, Form 23263. If a carton contains several kinds of records, single space this information if that permits all to be shown on one label. When not possible to show all information on label, show "List attached" under "Name of Record". Prepare a list of contents in duplicate, attach duplicate to yellow copy of label and place original inside the carton.

5. Under "From - Through", the beginning and ending dates of each kind of record contained in the carton must always be shown. For certain kinds of records, the beginning and ending numbers or letters, A to E, 8000 to 9001, etc., must also be shown to facilitate locating the record.

When it is not possible to show all information on label and a record of contents is desired by department, show "List attached" under "From - Through", but always show latest date of records included. Prepare a list in triplicate. Attach duplicate to yellow label, place triplicate in carton and retain original for your future reference.

6. Under "Project Item No." show only the item number appearing in the "Project and Item No." column of your "Flow Schedule", Form 23263, for all "EP" Projects. For all other projects, such as IX, JX, IX, etc., show project number (excluding prefix letters) and item number.

7. Under "Destroy" show date the records are to be destroyed. This date will be determined as explained on the reverse side of your Flow Schedule. When total retention period is permanent, show "Never".

8. Under "Ship to Archives" show the date on which the carton should be shipped to the Archives, as explained on the reverse side of your Flow Schedule.

03117172

IN RE: ABRAMS November 1992

NWBB-0008155

9. Beside "Restricted To" on yellow label show the name of the department or title of person authorized to make withdrawals, if it is important that the issue of records from Central Records Bureau or Archives be restricted.

10. Leave the following spaces blank: "Received at Archives" and "Location at Archives".

11. Under "Prefix" (at bottom of label) stamp the prefix letters and project number on the original label (white copy only) Form 22903. For example: Corporate Accounting, Property and Plant, would be EP-205.

12. Under "Box No." (at bottom of label) stamp the box number. This number will be the same as shown in the upper right hand corner, (Box No.), except that the prefix letters and project number will be omitted. NOTE: Use the rubber stamps with bold face letters and numbers ½" high. To prevent fading, use a high quality black stamp ink liberally.

(b) Paste the original (white) label, Form 22903, securely to the front end of the carton as shown in Exhibit A, Figure 3.

8. INDEX OF RECORDS SHIPPED TO RECORDS CENTER

(a) Prepare an Index Card (Form 22904) for each kind of record identified by a Project and Item number and post thereon from the Duplicate Labels, Form 22903, the details of each carton containing such records.

(b) Always show the beginning and ending dates and numbers of the records in each carton and the number of each carton.

(c) Enter under "Disposition—Shipped" the date (month and year) each carton is shipped to Records Center. When a carton of records is destroyed, enter the date of destruction under "Disposition—Destroyed".

(d) Make similar entries in the future whenever records are shipped to Records Center or destroyed.

9. SHIPMENT OF RECORDS TO RECORDS CENTER

(a) Records which are scheduled for shipment to Records Center and have been retained in active files for the periods shown in the Flow Schedules shall be shipped to Records Center.

(b) When cartons are ready for shipment to Records Center, prepare four copies of "Shipment Notice - Records to Records Center", Form 24943. The following forms shall be forwarded to Office Methods, 4-S-2.

Shipment Notice - Records to Records Center (Form 24943) in triplicate
Duplicate Labels (Form 22903)
Maintenance Requisition (Form 28678) for movement of records to S-Annex

03117173

2-24943 + Duplicate labels to "RECORDS CENTER - BUTLER L.N. LEFFLER"

NWDB-0008156

November 1992

UNLIMITED ARCHIVES

Cartons will be picked up and delivered to S-Annex for shipment to Records Center. Duplicate Labels and two (2) copies of Shipment Notice - Records to Records Center, will be forwarded to Records Management. The fourth copy of Form 24943 will be held by the originating department as evidence of issuance until the duplicate copy is returned from Records Center as acknowledgement of carton receipt.

NOTE: Shipments of records to Records Center from AB Building, Linhart, Coppermill, Trafford Foundry and Mica Products Department shall be delivered by Company Truck to S-Annex, East Pittsburgh, for shipment to Records Center. When shipment from these locations consists of a large number of cartons, notify F. R. Hofer (Phone 3908) that shipment is ready. Arrangements will be made to pick up the cartons from the local shipping point for direct shipment to Records Center.

Records from Porcelain Products Department and Printing & Nameplate Department will be shipped direct from those locations to Records Center.

10. WITHDRAWALS OF NON-CURRENT RECORDS

(a) When it becomes necessary to withdraw records from Records Center, prepare Request for Records, Form 23687, in triplicate. Fill in all information required as follows:

1. Name of Record, Project and Item Number - Enter exactly as shown in Flow Schedule, Form 23263.

2. Date or No. of Record - Show sufficient information to clearly identify the desired record.

3. Deliver To - Enter works, department, name and phone number of person to whom record will be sent.

4. Remarks - Information that may help to identify or locate the record may be shown. If a record cannot be located, Records Management will make a notation to that effect and return the duplicate to the sender.

5. Requested By and Date - Employe who initiated Form 23687 signs here and enters date.

6. To Be Returned On or Before (Date) - Enter date record should be returned to Records Management. This should be within 30 days. Original and duplicate of Form 23687 should be mailed to Custodian of Records, Susquehanna Site. Triplicate copy should be retained as follow-up within your department. If urgent, telephone requests can be made by phoning Records Management 61-808 and 61-810.

11. RETURN OF INACTIVE RECORDS TO RECORDS CENTER

(a) Folders and individual records for return to Records Center shall be mailed to Custodian of Records, Susquehanna Site.

(b) When complete cartons are ready for return to Records Center, prepare a

03117174

IN USE AIRAMIS November 1992

HWBB-0008157

maintenance requisition showing the following:

1. Number of cartons
2. Carton numbers
3. Explanation - Inactive records to be returned to Records Center.

Mail requisition to Office Methods, 4-S-2. Cartons will be picked up and delivered to S-Annex for shipment to Records Center.

(e) Withdrawn records should be returned to the Records Center within 30 days.

12. DESTRUCTION OF RECORDS

(a) Records shall be destroyed in accordance with Flow Schedules in the following manner:

1. Active Files

Some records are kept in active files for their total retention period. When this period is ended, the department to which such records belong may destroy them by the method shown in Flow Schedules.

2. Records Center

At the expiration of the total retention period for records stored in the Records Center, the Custodian of Records will prepare "Destruction of Records", Form 24781, in triplicate, and mail the original and duplicate to the Office Methods Representative, who will forward them to the Records Representative of department involved. Department Records Representative will contact the responsible department supervisor for his approval. Approval of this form will be considered as actual destruction. Both copies of Form 24781 bearing these signatures will then be returned to F. R. Hofer, 4-S-2. Original will be mailed to Custodian of Records. Duplicate will be retained by Office Methods.

3. Should any records be destroyed by fire, flood, sabotage, theft, etc., prior to the authorized destruction date, Form 23022 shall be prepared for each item as follows:

Place a cross after the words "Reason for Destruction", and under "Remarks" explain the circumstances and causes of the loss. Insert signature where required and send to Custodian of Records, Susquehanna Site.

4. Records in the Records Center will never be destroyed without prior notification on Form 24781, (1) to the department from whom the records were transferred and (2) approved by the Custodian of Records.

C. F. Ehalt

C. F. Ehalt, Office Methods

APPROVED:

T. H. New 4/7

T. H. New, Office Systems & Services

03117175

IN RE: ABRAMS November 1992

MWBB-0008158

PROCEDURE FOR PACKING RECORDS IN CARTONS EXHIBIT A

For Storage in Central Records Bureau See Figures 1 and 2
For Shipment to the Archives See Figures 2 and 3

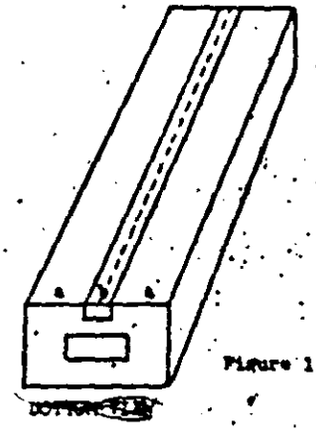

Figure 1

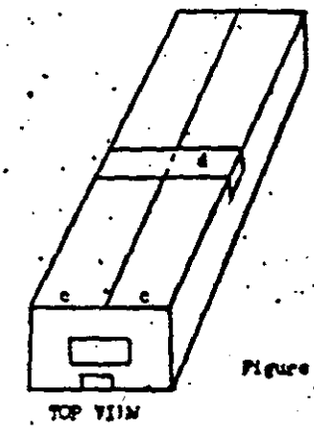

Figure 2

TOP VIEW

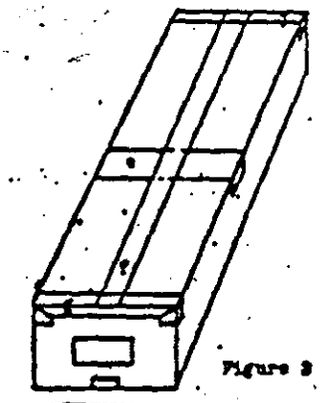

Figure 3

INSTRUCTIONS

(1) Bottom Flaps (a-a in Fig. 1) must always be glued or stapled securely. The following glues have given good results: #880, #6767-2, Sodium Silicate Solution (40-42-B6 Technical). Where flaps join, apply lengthwise (b in Fig. 1) a strip of 3" Orange Core gummed tape or its equivalent. Rub down well to prevent air bubble. Tape shall not extend over front of box more than 2".

(2) Top Flaps (c-c in Fig. 2) shall be sealed by placing a strip of 3" tape (d) crosswise in center of carton. This will suffice while carton is in Central Records Bureau. When records are withdrawn from carton, it shall be resealed in same manner. Before cartons are shipped to Archives, seal as shown in Fig. 3.

(3) Cartons shipped to Archives must have bottom flaps sealed as provided in par. 1 and Fig. 1, and tape sealed as follows with 3" Orange Core gummed tape or its equivalent, as shown in Fig. 3:

e. Place a strip of tape crosswise in center of carton
f. Place a strip of tape lengthwise where flaps join,
g Seal both ends with strips of 3" tape folded under at corners. Tape shall not be placed over nor under labels. (if shipped in outer containers, end tapes (g) need not be applied).

(4) Standard cartons only shall be used. The following cartons may be requisitioned from East Pittsburgh, General Production, 35. (Minimum order of $10 is desired).

#92H-1 for records 8½" x 6" and smaller,
94E-2 for records 10" x 15" (legal size),
821 for WESCO sales tickets, or other records approximately 8½" x 8½",
842 for records slightly larger than 8½" x 6", such as vouchers,
677 for records 8½" x 11" filed on 11" edge.

03117176