adapted to flat flames, or to conical flames that can be spread over the floor of the combustion chamber. The proper bricking of a large or even medium sized boiler for oil firing is important and frequently it is advisable to consult an authority on this subject. The essential in combustion chamber design is to provide against flame impingement upon either metallic or firebrick surfaces. Manufacturers of oil burners usually have available detailed plans for adapting their burners to various types of boilers, and such information should be utilized.

Controls

Controls for oil burner operation, including devices for the safety and protection of a boiler or furnace, are fully described in Chapter 34.

GAS-FIRED HEATING EQUIPMENT

A gas burner is defined by the *American Gas Association* as "a device

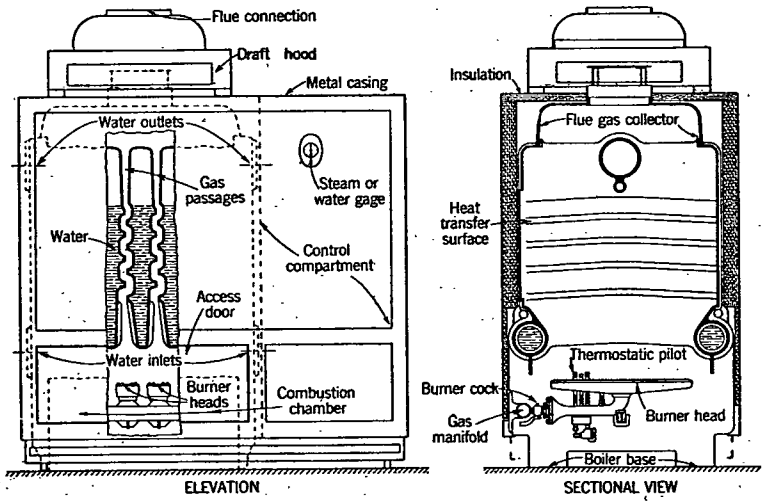

FIG. 19. GAS-FIRED BOILER

for the final conveyance of the gas, or a mixture of gas and air, to the combustion zone." Burners used for domestic heating are of the atmospheric injection, luminous flame, or power burner types.

The use of gas has resulted in the production of a number of types of domestic gas heating appliances, and systems. These may be classified in types designed for central heating plants, and those for unit application. Gas-designed units and conversion burners are available for the several kinds of central systems. Unit heaters, space heaters and circulators may be had for installation in the space being heated.

Central Heating Systems

Boilers and furnaces specially designed for gas-firing incorporate design features for obtaining maximum efficiency and performance. Small flue passes to secure good heat transfer, the use of materials resistant to the corrosive effects of products of combustion, and draft hoods are notable

features. Control equipment includes gas pressure regulators, automatic pilots, and limit controls designed to protect the appliance and to insure safety of operation. A boiler designed for gas-burning is illustrated in Fig. 19.

Conversion burners are usually complete burner and control units designed for installation in existing boilers and furnaces. Burner heads are of circular or rectangular shape in order to fit in the space available. Single port burners, discharging the flame against a ceramic, stainless steel, or cast iron target, have become popular in the past few years. The control equipment is generally the same as for gas boilers and furnaces. Various baffles made of clay radiants or metal are used for the purpose of guiding the products of combustion along the heating surface in the firebox or flues. Automatic air dampers are supplied on many models to prevent flow of air into the firebox when the burner is not operating. A typical gas conversion burner is shown in Fig. 20.

Burners of this type are available in sizes ranging from 50,000 to 400,000 Btu per hour capacity. Burners of even larger capacity, for use with natural

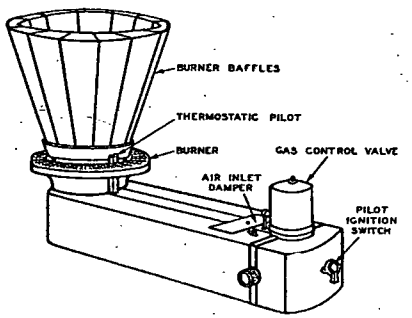

FIG. 20. TYPICAL GAS CONVERSION BURNER

gas in large steel boilers, are usually engineered by the local utility or contractor. They are available in an infinite number of sizes because the burner may be an assembly of multiple burner heads filling the entire firebox.

Domestic sizes of conversion burners should conform to American Standard Listing Requirements for Conversion Burners, A.S.A. Z21.17-1948 and installation should be made in accordance with American Standard Requirements for Installation of Domestic Gas Conversion Burners. A.S.A. Z21.8–1948.

Draft hoods, conforming to American Standard Requirements, should be installed in place of the dampers used with a solid fuel.

One form of central heating system is the warm air floor furnace[5]. The use of these furnaces is adaptable to mild climates or for auxiliary heating or heating of single rooms in colder climates. They are used for heating first floors, or where heat is required in only one or two rooms. A number may be used to provide heat for the entire building where all rooms are on the ground floor, thus giving the heating system flexibility. With the usual type the register is installed in the floor, the heating element, gas piping, and also the flue gas vent piping being suspended below the floor.